Cisco Aironet Four-Port Dual-Band Polarization-Diverse Antenna (AIR-ANT2513P4M-N)

This document describes the AIR-ANT2513P4M-N antenna and provides electrical specifications and mounting instructions. The antenna is a four-port polarization-diverse patch array that operates over the 2.4-GHz and 5-GHz Wi-Fi bands. It ships with an articulating mount for use on flat surfaces and masts and is adjustable in both the horizontal and vertical planes. The radome is paintable using commonly available non-conductive spray paints, such as Krylon or Rust-Oleum. The antenna is designed for use in indoor and outdoor environments with Cisco Aironet 3702P and 1570 series access points.

The following information is provided in this document:

- Technical Specifications,
- System Requirements
- Safety Instructions
- Installation Notes
- Choosing a Mounting Location
- Installing the Antenna
- Painting the Antenna
- Obtaining Documentation and Submitting a Service Request

Technical Specifications

Antenna Type	Dual-Band Polarization Diverse Patch Array	
Operating Frequency Ranges	2.4-2.5 GHz	5.15-5.925 GHz
Nominal Input Impedance	50 Ohms	50 Ohms
VSWR	1.6:1	1.5:1 (above 5.7 GHz to 5.9 GHz) 2:1 (from 5.15 GHz to 5.7 GHz)
Peak Gain	13 dBi	13 dBi
Polarization (Ports A & C)	Vertical	Vertical
Polarization (Ports B & D)	Horizontal	Horizontal
Nominal Elevation Plane 3-dB Beamwidth	33 Degrees	27 Degrees
Nominal Azimuth Plane 3-dB Beamwidth	31 Degrees	31 Degrees
V-Pol Maximum Sidelobe Level	-15 dBc	-12 dBc
H-Pol Maximum Sidelobe Level	-10 dBc	-12 dBc
Front-to-Back Ratio	> 30 dB	> 30 dB
Connector Type	N-Female Bulkhead	
Length	14.5 in. (36.8 cm)	
Width	20 in. (50.7 cm)	
Height	0.8 in. (2.11 cm)	
Weight	81.1 oz. (2.3 kg)	
Water/Foreign Body Ingress	IP67	
Operational Wind	100 MPH	
Operating Temperature Range	-40° C to 85° C	

Figure 1 ANT2513P4M-N front high view

2.4 GHz Antenna Radiation Patterns

2.4 GHz Ports A&C Azimuth Plane	2.4 GHz Ports A&C Elevation Plane
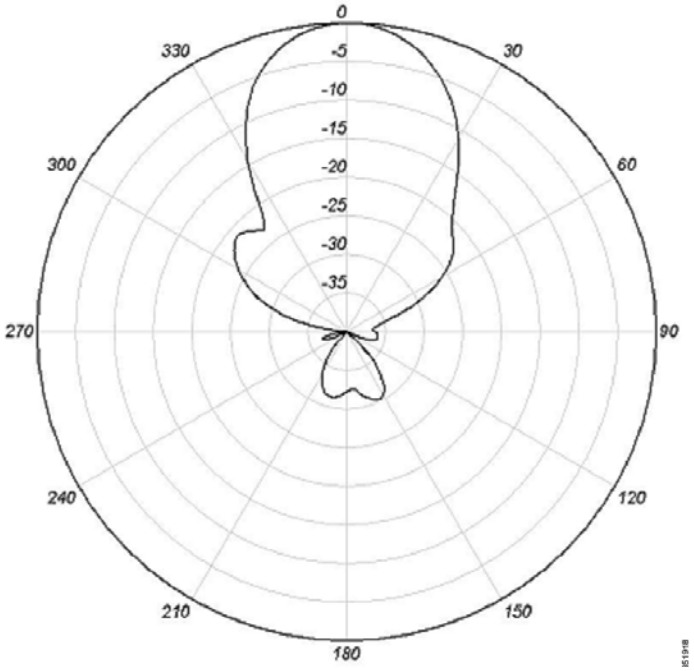	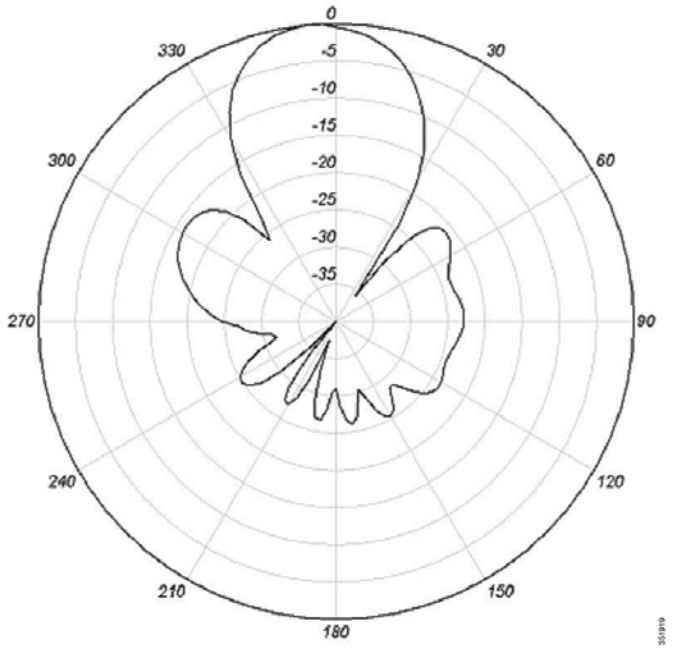
2.4 GHz Ports B&D Azimuth Plane	2.4 GHz Ports B&D Elevation Plane
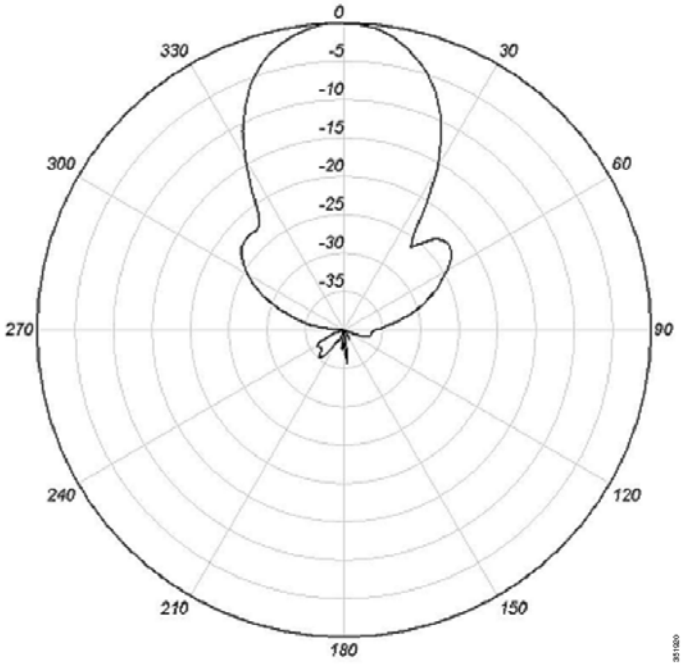	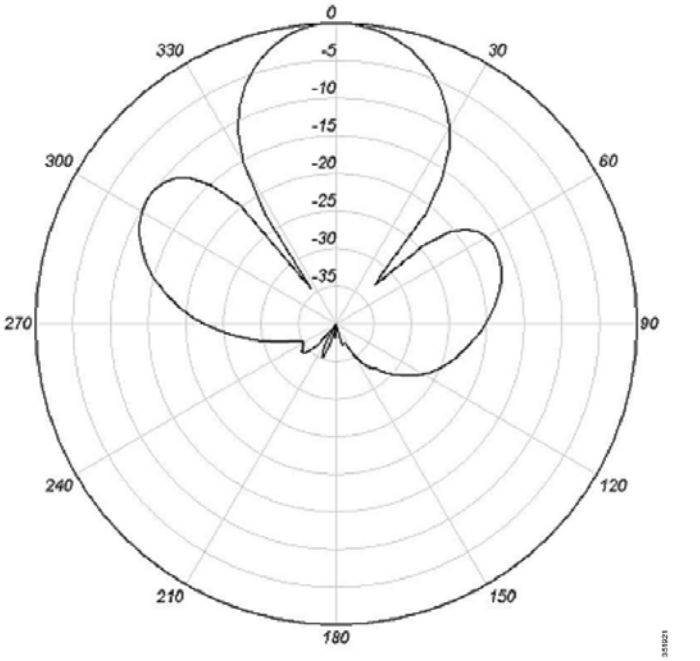

5 GHz Antenna Radiation Patterns

5 GHz Ports A&C Azimuth Plane	5 GHz Ports A&C Elevation Plane
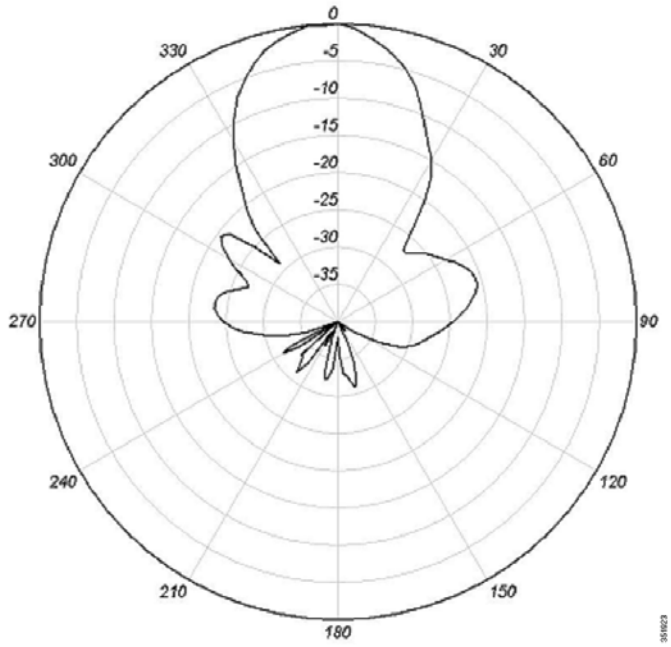	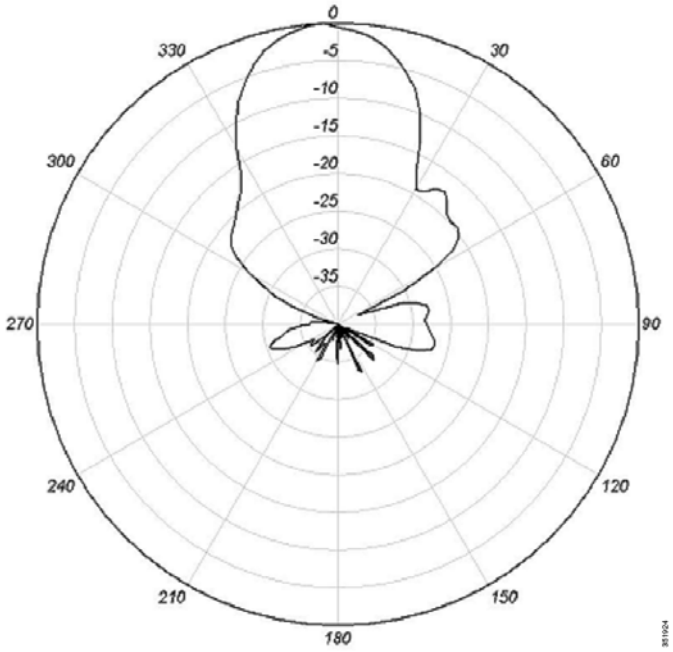
5 GHz Ports B&D Azimuth Plane	**5 GHz Ports B&D Elevation Plane**
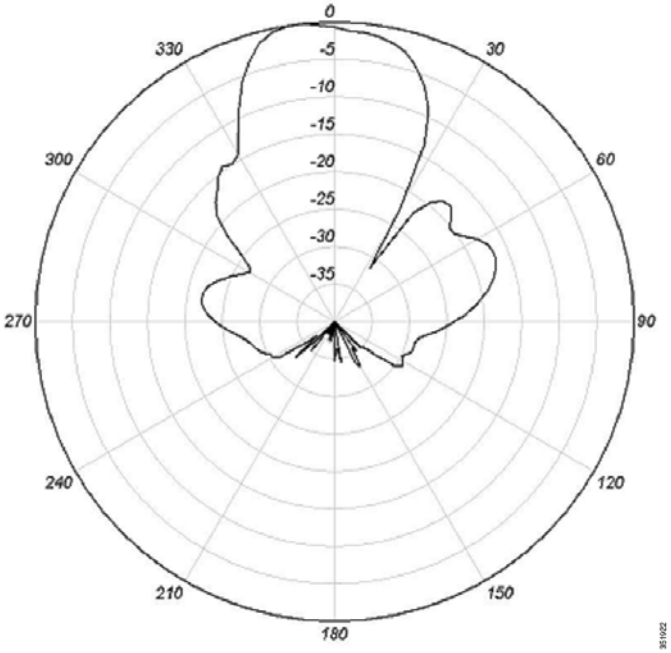	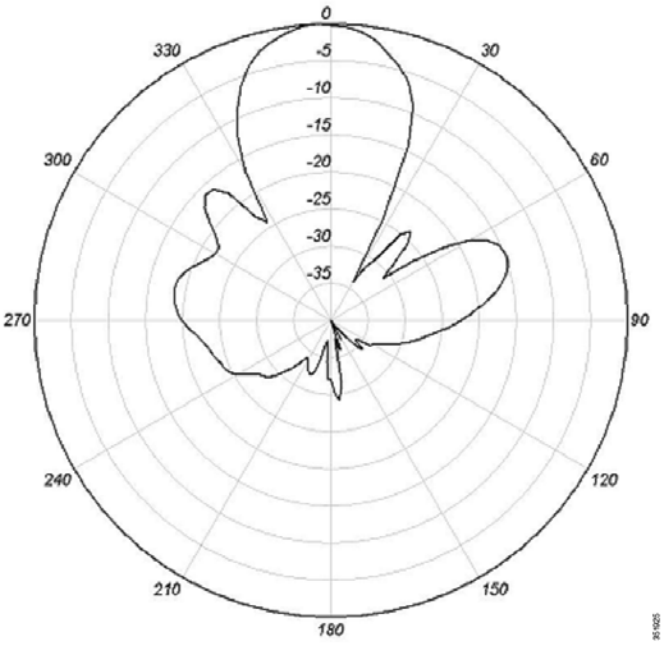

Antenna and Bracket Dimensions

Figure 2 and Figure 3 show the overall dimensions of the antenna and bracket.

Figure 2 Antenna and Bracket Dimensions (in millimeters)

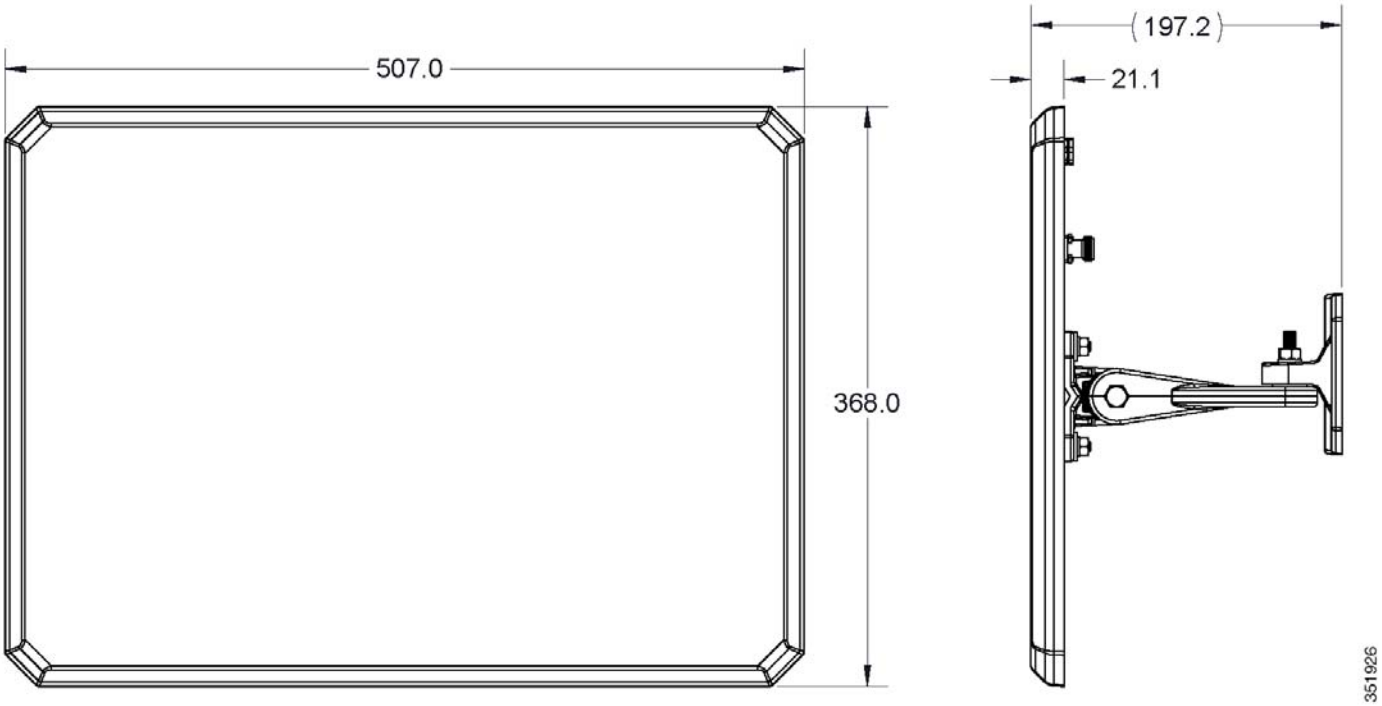

Figure 3 Rear View of Antenna (dimensions in millimeters)

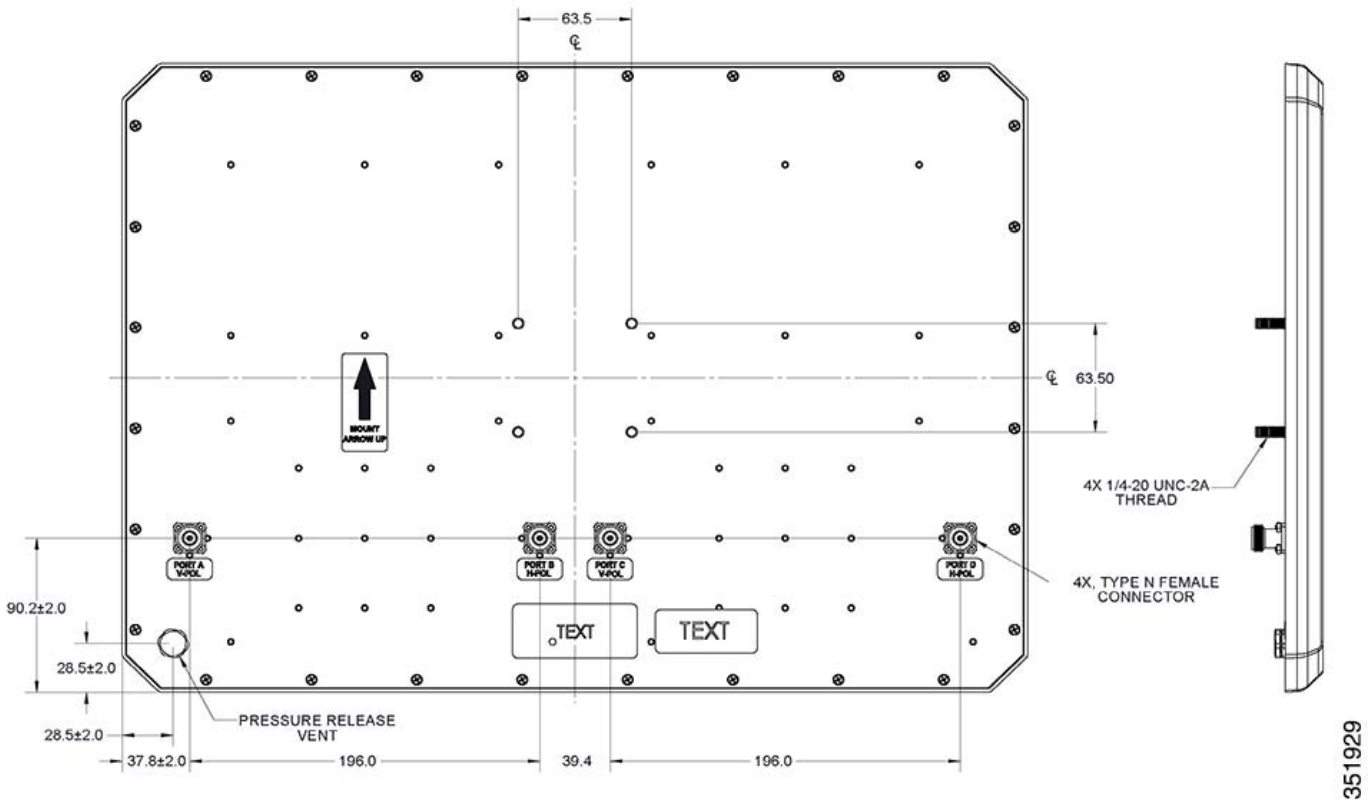

System Requirements

This antenna is designed for use with Cisco Aironet 3702P and 1570 series access points. The antenna can be mounted on a wall, a ceiling, or a pole with a maximum diameter of 5 inches (12.7 cm).

Safety Instructions

WARNING: IMPORTANT SAFETY INSTRUCTIONS This warning symbol means danger. You are in a situation that could cause bodily injury. Before you work on any equipment, be aware of the hazards involved with electrical circuitry and be familiar with standard practices for preventing accidents. Use the statement number provided at the end of each warning to locate its translation in the translated safety warnings that accompanied this device. Statement 1071

WARNING: SAVE THESE INSTRUCTIONS Only trained and qualified personnel should be allowed to install, replace, or service this equipment.Statement 1030

Follow these safety instructions when installing your antenna.

- Plan your installation procedure carefully and completely before you begin.
- If you are installing an antenna for the first time, for your own safety as well as others, seek professional assistance. Consult your dealer, who can explain which mounting method to use for the location where you intend to install the antenna.
- Select your installation site with safety, as well as performance, in mind. Remember that electric power cables and telephone lines look alike. For your safety, assume that any line is an electric power line until determined otherwise.

- Call your local power company or building maintenance organization if you are unsure about cables close to your mounting location.
- When installing your antenna, do not use a metal ladder. Do dress properly: shoes with rubber soles and heels, rubber gloves, and a long sleeved shirt or jacket.
- If an accident or emergency occurs with the power lines, call for qualified emergency help immediately.

Installation Notes

Because antennas transmit and receive radio signals, they are susceptible to RF obstructions and common sources of interference that can reduce throughput and range of the device to which they are connected. Follow these guidelines to ensure the best possible performance:

- Mount the antenna to utilize its propagation characteristics. This antenna is designed to radiate energy in a somewhat narrow beam from the front of the antenna. It should be aimed into the intended coverage area.
- Keep the antenna away from metal obstructions such as heating and air-conditioning ducts, large ceiling trusses, building superstructures, and major power cabling runs. If necessary, use a rigid conduit to lower the antenna away from these obstructions.
- The density of the materials used in a building's construction determines the number of walls the signal must pass through and still maintain adequate coverage. Consider the following before choosing the location to install your antenna:
  - Signals penetrate paper, vinyl and drywall the easiest. A signal can penetrate five or six walls constructed of drywall or wood.
  - Signals are more heavily attenuated passing through concrete and solid-wood walls.
  - Signals often reflect off thick metal walls and may not penetrate at all.
- Install the antenna away from microwave ovens and 2-GHz cordless phones. These products can cause signal interference because they operate in the same frequency range as the device to which your antenna is connected.

Choosing a Mounting Location

The antenna should be mounted clear of any obstructions to the side or front of the enclosure. Keep in mind that this antenna should be aimed into the intended coverage area, so you should mount the antenna so that the desired mechanical tilt can be achieved. If possible, mount the antenna near the access point so you can use the shortest possible connecting cables.

Installing the Antenna

You can install the antenna on any flat surface or on a pole with a minimum diameter of 2 inches (5.08 cm) and a maximum diameter of 5 inches (12.7 cm). The antenna and one mounting flange are connected together when shipped. When mounting the antenna you need to assemble the bracket hardware, connect the antenna and bracket to the mounting surface, and adjust the antenna orientation.

Contents of Antenna Bracket Kit

Figure 4 shows the parts included with the antenna bracket.

Figure 4 Antenna Bracket Kit Contents

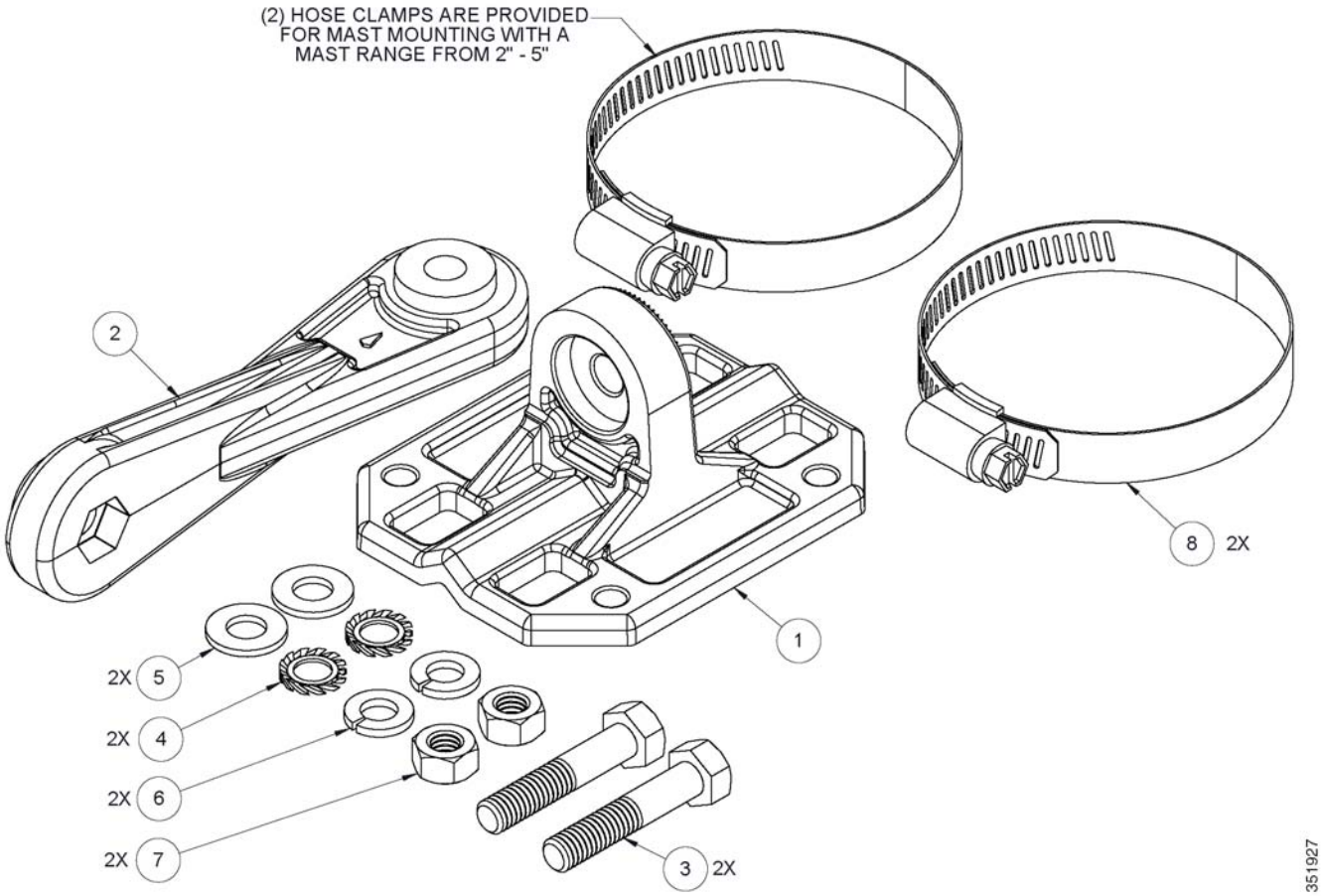

1	Mounting flange	5	Flat washers
2	Mounting arm	6	Lock washers
3	Arm attachment bolts (5/16-18 x 1-5/8")	7	Arm attachment nuts (5/16-18)
4	Serrated washers	8	Hose clamps (50 – 135 mm adjustment)

NOTE: One flange (not pictured here) ships attached to the antenna. The flange pictured here is the one that you attach to the wall or the pole.

Tools and Equipment Required

You will need these tools to loosen and tighten the adjustment bolts on the bracket:

- A 1/2 in. (13-mm) wrench or socket

To mount the antenna on a wall or ceiling, you will need these supplies:

- Four mounting screws or bolts and wall anchors

NOTE: The fasteners and mounting surface should be capable of maintaining a minimum pullout force of 150 pounds (68 kg) to support the weight of the antenna and bracket plus the potential wind loading on the antenna.

To mount the antenna on a pole or mast, you will need either or both of these supplies:

- Slotted screwdriver to tighten the screws on the hose clamps
- A 5/16 in. (8mm) socket or box wrench

NOTE: The pole or mast must be rigid enough to hold the weight of the antenna plus the associated forces produced by wind loads. In addition, the pole or mast must be structurally strong enough to withstand the clamping force of the hose clamps.

You may need the following tools and equipment, which are not provided:

- A drill and drill bit
- A pencil

Mounting on a Wall or Ceiling

Follow these steps to mount your antenna on a wall or ceiling.

1. Remove the antenna and bracket hardware from the shipping container.
2. Determine the mounting location for the antenna.

   NOTE: The fasteners and mounting surface should be capable of maintaining a minimum pullout force of 150 pounds (68 kg) to support the weight of the antenna plus the potential wind loading on the antenna.

3. Attach the mounting bracket to the wall or ceiling using four screws or bolts and anchors through the holes on the bracket. Figure 5 shows the wall-mount bracket.

Figure 5 Wall-Mount Bracket and Dimensions (in millimeters)

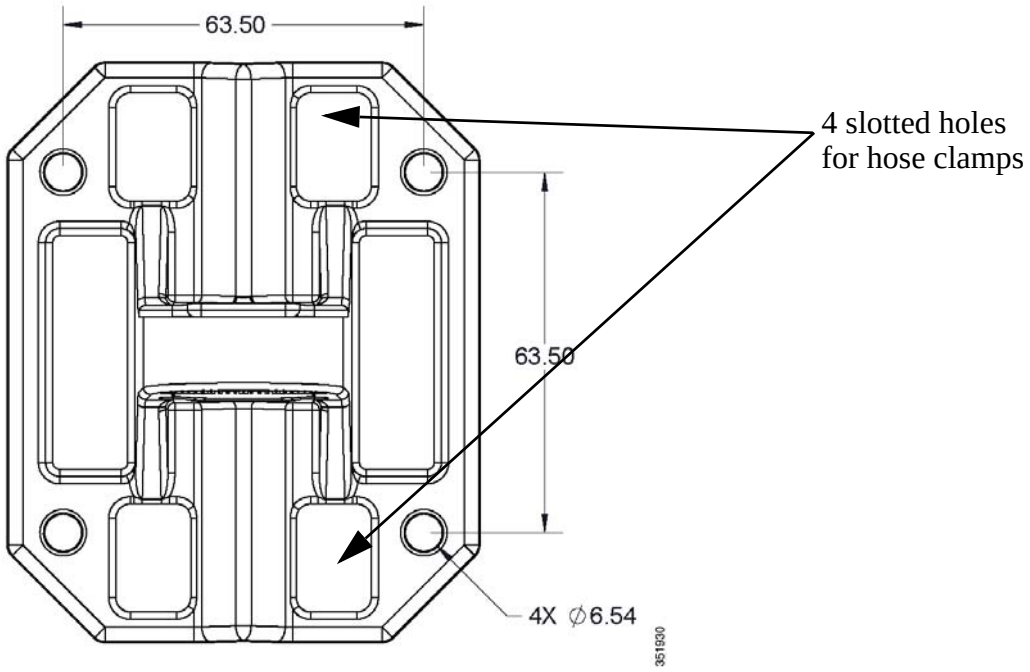

4. Assemble the bracket hardware as shown in Figure 6.

Figure 6 Assembling the Bracket Hardware

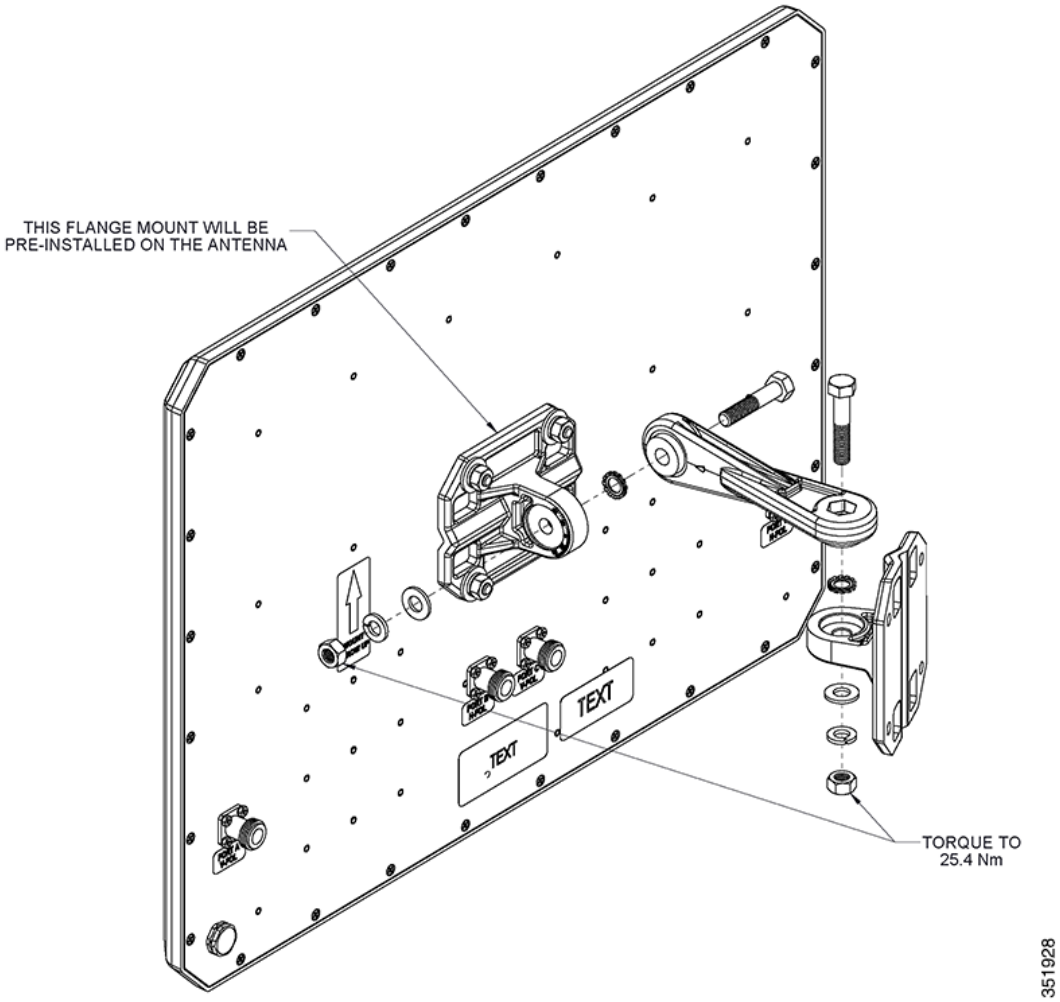

5. Make sure you orient the antenna correctly (note the arrow on the back of the antenna that indicates the top of the antenna). Use a 1/2 in. (13-mm) wrench to loosen the elevation adjustment bolt and the elevation pivot bolt.
6. Adjust the azimuth (side-to-side position) and elevation (up-and-down position) of the antenna. Loosen the adjustment bolts slightly to allow for adjustment. Azimuth angle can be adjusted ±25 degrees and elevation can be adjusted ±60 degrees. You can use the azimuth and elevation markings on the mounting arm and the wall flange as a guide.
7. After you adjust the antenna position, tighten the adjustment bolts and the pivot bolts. Tighten all bolts to 18.7 +/- 5 lb-ft (25.4 Nm).
8. Connect the antenna cables to the access point. The antenna ports are labeled A through D, from left to right.
   - On the AP3702P, connect the antenna port A to connector A on the access point, antenna port B to connector B, and so on.
   - On the AP1570, connect antenna port A to Port 1 on the AP, antenna port B to port 2 on the AP, and so on.

See the Suggested Cable section for cable recommendations.

Mounting on a Pole or Mast

The antenna can be mounted on a pole or mast using two hose clamps.

NOTE: The pole or mast must be rigid enough to hold the weight of the antenna plus the associated forces produced by wind loads. In addition, the mast must be structurally strong enough to withstand the clamping force of the hose clamps.

To mount the antenna on a pole or mast, follow these steps.

1. Follow steps 1 and 2 from the Mounting on a Wall or Ceiling section.
2. Position and mount the mounting flange (Figure 4) onto the pole or mast using the hose clamps provided in the kit. The hose clamps should pass through the slots on the mounting flange (Figure 5).
3. Tighten the clamps only enough to hold the flange and antenna in place until the antenna is positioned to its final position.
4. Assemble the antenna and bracket to the flange as shown in Figure 6.
5. Position the antenna, mounting bracket, and hose clamps on the mast.
6. Tighten the hose clamps until the antenna is fully secure on the mast. Ensure that the antenna cannot rotate about the mast.
7. After the antenna is secured on the mast, adjust the azimuth and elevation.

   To adjust the azimuth and elevation, use a 1/2 in. (13-mm) wrench to loosen the adjustment bolts. Azimuth can be adjusted ±25 degrees and elevation can be adjusted ±60 degrees.
8. After you adjust the antenna position, tighten the adjustment bolts. Tighten all bolts to 18.7 +/- 5 lb-ft (25.4 Nm).
9. Connect the antenna cables to the access point. The antenna ports are labeled A through D, from left to right. Connect the antenna port A to connector A on the access point, antenna port B to connector B on the access point, and so on. See the Suggested Cable section for cable recommendations.

Suggested Cable

Cisco recommends a high-quality, low-loss cable for use with the antenna, such as Cisco AIR-CAB005LL-R-N= (5 foot low-loss cable with RP-TNC and N-type connectors) for AP3702P, or AIR-CAB005LL-N= or AIR-CAB010LL-N= (5 foot and 10 foot N-type connectors, respectively) for AP1570. Four cables are required.

NOTE: Coaxial cable loses efficiency as the frequency increases, resulting in signal loss. The cable should be kept as short as possible because cable length also determines the amount of signal loss (the longer the run, the greater the loss).

Painting the Antenna

Painting the antenna and the bracket does not affect its performance if you use standard exterior-grade, oil-based or latex paint. Do not use metallic or metallic-flake paints, which will degrade antenna performance.

NOTE: Before painting the antenna, cover the pressure-release vent on the rear, lower-left of the antenna with masking tape to prevent clogging (Figure 3).

Cisco recommends Krylon Fusion for Plastic or Rust-Oleum for Plastic (which might require a primer coat). For best results, follow the surface preparation suggestions from the paint manufacturer.

Obtaining Documentation and Submitting a Service Request

For information on obtaining documentation, submitting a service request, and gathering additional information, see the monthly *What's New in Cisco Product Documentation*, which also lists all new and revised Cisco technical documentation, at:

http://www.cisco.com/c/en/us/td/docs/general/whatsnew/whatsnew.html

Subscribe to the *What's New in Cisco Product Documentation* as a Really Simple Syndication (RSS) feed and set content to be delivered directly to your desktop using a reader application. The RSS feeds are a free service and Cisco currently supports RSS Version 2.0.

Cisco and the Cisco logo are trademarks or registered trademarks of Cisco and/or its affiliates in the U.S. and other countries. To view a list of Cisco trademarks, go to this URL: www.cisco.com/go/trademarks. Third-party trademarks mentioned are the property of their respective owners. The use of the word partner does not imply a partnership relationship between Cisco and any other company. (1721R)

Any Internet Protocol (IP) addresses and phone numbers used in this document are not intended to be actual addresses and phone numbers. Any examples, command display output, network topology diagrams, and other figures included in the document are shown for illustrative purposes only. Any use of actual IP addresses or phone numbers in illustrative content is unintentional and coincidental.