This product has been discontinued

Spec Sheet

Cisco UCS C200 M2 High-Density Small Form Factor Drive Rack-Mount Server

Cisco Systems
170 West Tasman Dr.
San Jose, CA, 95134
www.cisco.com

Publication History

Rev A.19 March 14, 2016

CONTENTS

OVERVIEW . . . 3
DETAILED VIEWS . . . 4
Chassis Front View . . . 4
Chassis Rear View . . . 5
BASE SERVER STANDARD CAPABILITIES and FEATURES . . . 6
CONFIGURING the SERVER . . . 8
STEP 1 VERIFY BASE SKU . . . 9
STEP 2 SELECT CPU(s) . . . 10
STEP 3 SELECT MEMORY . . . 12
STEP 4 SELECT RAID CONFIGURATION . . . 16
STEP 5 SELECT HARD DISK DRIVES (HDDs) or SOLID STATE DRIVES (SSDs) . . . 19
STEP 6 SELECT PCIe OPTION CARD(s) . . . 21
STEP 7 ORDER OPTIONAL NETWORK CARD ACCESSORIES . . . 23
STEP 8 SELECT OPTIONAL DVD-RW DRIVE . . . 26
STEP 9 ORDER OPTIONAL REDUNDANT POWER SUPPLY . . . 27
STEP 10 SELECT AC POWER CORD(s) . . . 28
STEP 11 ORDER OPTIONAL TOOL-LESS RAIL KIT . . . 31
STEP 12 ORDER OPTIONAL CABLE MANAGEMENT ARM . . . 32
STEP 13 ORDER A TRUSTED PLATFORM MODULE . . . 33
STEP 14 SELECT OPERATING SYSTEM AND VALUE-ADDED SOFTWARE . . . 34
STEP 15 SELECT OPERATING SYSTEM MEDIA KIT . . . 37
STEP 16 SELECT SERVICE and SUPPORT LEVEL . . . 38
OPTIONAL STEP - ORDER RACK(s) . . . 42
OPTIONAL STEP - ORDER PDU . . . 43
SUPPLEMENTAL MATERIAL . . . 44
CHASSIS . . . 44
CPUs and DIMMs . . . 45
Physical Layout . . . 45
Memory Population Rules . . . 46
Low-Voltage DIMM Considerations . . . 46
Recommended Configurations . . . 47
Configuration Samples . . . 48
RACKS . . . 50
PDUs . . . 52
POWER SUPPLIES . . . 53
KVM CABLE . . . 54
Motherboard USB Port . . . 55
TECHNICAL SPECIFICATIONS . . . 56
Dimensions and Weight . . . 56
Power Specifications . . . 56
Environmental Specifications . . . 58
Compliance Requirements . . . 59

OVERVIEW

The Cisco® UCS C200 M2 High-Density Small Form Factor (SFF) Rack Server (*Figure 1*) is a high-density, two-socket, one rack-unit (1RU) rack server that extends the capabilities of the Cisco Unified Computing System™. The server uses Intel's latest Xeon 5600 Series multi-core processors with 12 DIMM slots and 2 PCIe slots. The UCS C200 M2 SFF Server is available with eight 2.5-inch SFF hard disk drives or solid-state drives.

Figure 1 Cisco UCS C200 M2 High-Density SFF Rack Server

Front View

Rear View

DETAILED VIEWS

Chassis Front View

Figure 2 shows the Cisco UCS C200 M2 High-Density SFF Rack Server front panel with the standard front panel control module installed. *Figure 3* shows the server with the optional DVD-RW optical drive module you can configure in place of the front panel control module.

Figure 2 Chassis Front View (Control Panel Installed)

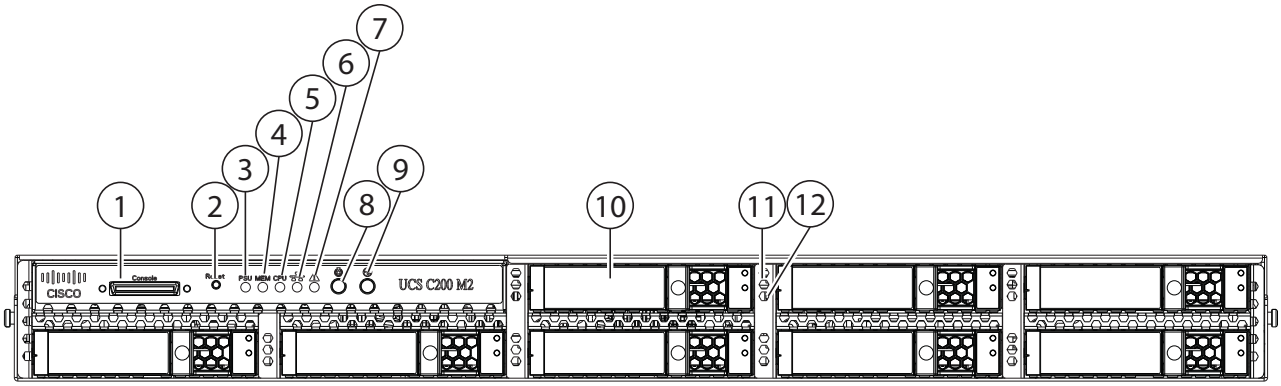

1	KVM console connector[1]	**7**	System fault LED
2	Reset button	**8**	Locator button/LED
3	Power supply fault LED[2]	**9**	Power button/Power status LED
4	Memory fault LED[2]	**10**	Hard drives (up to 8)
5	CPU fault LED[2]	**11**	Hard drive fault LED
6	Network activity LED[2]	**12**	Hard drive activity LED

Notes . . .

1. The KVM connector is not available if the optional DVD-RW optical drive is installed instead of the front panel control module.
2. Not available if an optional DVD-RW drive is installed.

For more information about the KVM cable connection, see *KVM CABLE, page 54*.

Figure 3 Chassis Front View (Optional DVD-RW Optical Drive Installed)

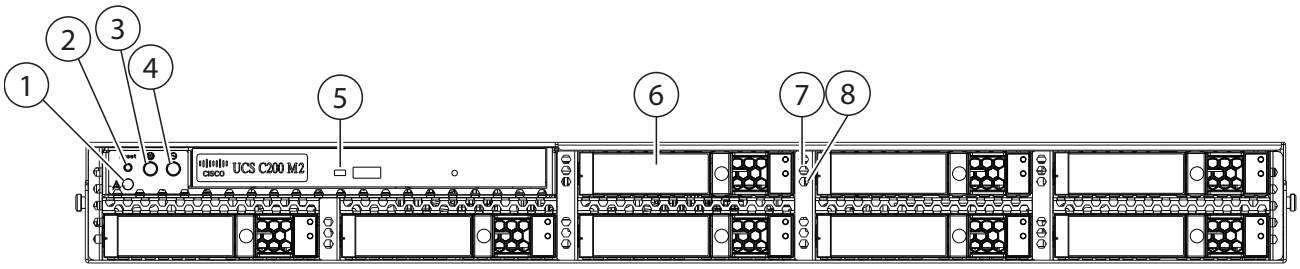

1	System fault LED	**5**	DVD activity LED
2	Reset button	**6**	Hard drives (up to 8)
3	Locator button/LED	**7**	Hard drive fault LED
4	Power button/Power status LED	**8**	Hard Drive Activity LED

Chassis Rear View

Figure 4 shows the external features of the rear panel.

Figure 4 Chassis Rear View

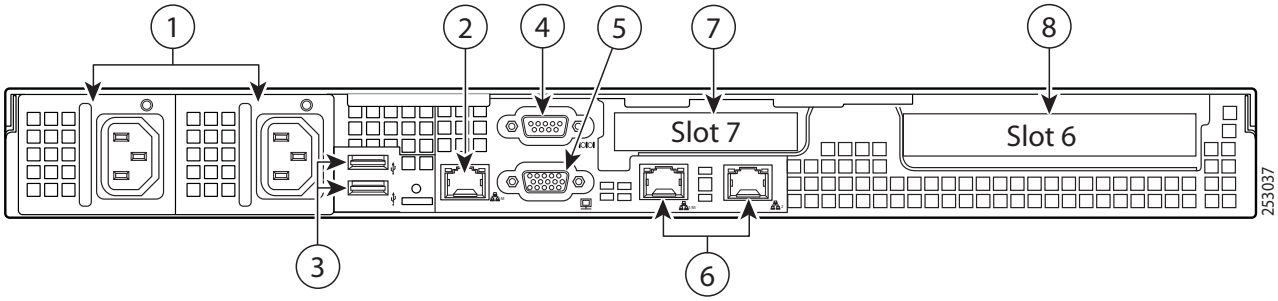

1	Power supply (up to 2)	**5**	Video connector (DB15 VGA)
2	10/100 Ethernet management port (RJ-45)	**6**	10/100/1000 Gigabit Ethernet ports (2)
3	USB 2.0 connectors (2)	**7**	Low-profile PCIe card slot (PCIe slot 7)
4	Serial connector (DB9)	**8**	Standard-profile PCIe card slot (PCIe slot 6)

BASE SERVER STANDARD CAPABILITIES and FEATURES

Table 1 lists the capabilities and features of the base server. Details about how to configure the server for a particular feature or capability (for example, number of processors, disk drives, or amount of memory) are provided in *CONFIGURING the SERVER, page 8*.

Table 1 Capabilities and Features

Capability/Feature	Description
Chassis	Single rack unit (1RU) chassis
CPU	Up to two Intel® Xeon® 5600 series processors
Chipset	Intel® 5520 (Tylersburg) chipset
Memory	12 slots for registered ECC DIMMS (up to 192 GB), supporting Intel SDDC
NIC	Embedded dual-port Intel 82576NS PCIe-based Gigabit Ethernet controller
Expansion slots	Two PCIe slots (on a riser card) ■ One full-height profile, half-length slot with x16 connector and x8 lane ■ One half-height profile, half-length slot with x8 connector and x8 lane
Storage controller	One of the following: ■ An onboard SATA RAID 0/1 controller integrated on motherboard (Intel ICH10R) that can control up to four SATA drives, or ■ An optional RAID mezzanine card: • LSI® 1068E 8-port controller mezzanine card (RAID levels 0 or 1) for up to eight internal SAS or SATA drives, or ■ One of these optional RAID PCIe plug-in cards: • LSI 6G MegaRAID SAS 9260-8i controller (RAID levels 0, 1, 5, 6, 10, 50, or 60 supported) for up to eight SAS or SATA drives, or • LSI 6G MegaRAID SAS 9280-4i4e Controller (RAID levels 0, 1, 5, 6, 10, 50, or 60 supported) for up to eight SAS or SATA drives
Internal storage devices	■ Up to eight 2.5-inch SAS or SATA hot-swappable HDDs or solid state drives (SSDs) ■ USB connector on motherboard
Video	■ 1280 x 1024 resolution ■ 32-bit color depth ■ 8 MB video memory

Capability/Feature	Description
Interfaces	■ Rear panel • One DB9 serial port connector • Two USB 2.0 port connectors • One DB15 VGA connector • Two RJ-45 10/100/1000 Ethernet port connectors • One RJ-45 10/100 Ethernet management port ■ Front panel • One KVM console connector **NOTE:** If you choose the optional DVD-RW optical drive, the KVM connector and some of the LEDs that are supplied on the front panel controller will not be available.
Front Panel	One of the following: ■ Front panel controller, or ■ Optional DVD-RW optical drive, with dual-layer (DL) support
Power subsystem	Up to two 650 W power supplies (N+1 or nonredundant configuration options)
Fans	Chassis: ■ Five 40-mm redundant fans Power supply: ■ Each power supply is equipped with a fan.
Integrated management processor	Cisco Integrated Management Controller (CIMC) (with integrated video, KVM redirection, Security Intelligence Operations (SIO), fan speed control, Platform Environment Control Interface (PECI), and voltage monitoring)

CONFIGURING the SERVER

Follow these steps to configure the Cisco UCS C200 M2 High-Density SFF Rack Server:

- *STEP 1 VERIFY BASE SKU, page 9*
- *STEP 2 SELECT CPU(s), page 10*
- *STEP 3 SELECT MEMORY, page 12*
- *STEP 4 SELECT RAID CONFIGURATION, page 16*
- *STEP 5 SELECT HARD DISK DRIVES (HDDs) or SOLID STATE DRIVES (SSDs), page 19*
- *STEP 6 SELECT PCIe OPTION CARD(s), page 21*
- *STEP 7 ORDER OPTIONAL NETWORK CARD ACCESSORIES, page 23*
- *STEP 8 SELECT OPTIONAL DVD-RW DRIVE, page 26*
- *STEP 9 ORDER OPTIONAL REDUNDANT POWER SUPPLY, page 27*
- *STEP 10 SELECT AC POWER CORD(s), page 28*
- *STEP 11 ORDER OPTIONAL TOOL-LESS RAIL KIT, page 31*
- *STEP 12 ORDER OPTIONAL CABLE MANAGEMENT ARM, page 32*
- *STEP 13 ORDER A TRUSTED PLATFORM MODULE, page 33*
- *STEP 14 SELECT OPERATING SYSTEM AND VALUE-ADDED SOFTWARE, page 34*
- *STEP 15 SELECT OPERATING SYSTEM MEDIA KIT, page 37*
- *STEP 16 SELECT SERVICE and SUPPORT LEVEL, page 38*
- *OPTIONAL STEP - ORDER RACK(s), page 42*
- *OPTIONAL STEP - ORDER PDU, page 43*

STEP 1 VERIFY BASE SKU

Verify the product ID (PID) of the base server as shown in *Table 2*.

Table 2 PID of the Base C200 M2 High-Density SFF Rack Base Server

Product ID (PID)	Description
UCSC-BSE-SFF-C200	C200 M2 SFF Rack Srvr w/ 1PSU w/o CPU, mem, HDD, PCIe, DVD

The UCSC-BSE-SFF-C200 base server:

- Includes one power supply.
- Does not include CPU, memory, hard disk drives (HDDs), solid-state drives (SSDs), plug-in PCIe cards, or DVD-RW drive.

NOTE: Use the steps on the following pages to configure the server with the components that you want to include.

STEP 2 SELECT CPU(s)

The standard CPU features are:

- Intel Xeon 5600-series (Westmere-EP) CPUs
- Intel 5520 chipset
- Cache size of 4, 8, or 12 MB

Select CPUs

The available CPUs are listed in *Table 3*.

Table 3 Available Intel CPUs: Xeon Westmere-EP x56xx Family

Product ID (PID)	Intel Number	Clock Freq (GHz)	Power (W)	Cache Size (MB)	Cores	QPI	Highest DDR3 DIMM Clock Support (MHz)[1]
A01-X0117	X5675	3.06	95	12	6	6.4 GT/s	1333
A01-X0105	X5650	2.66	95	12	6	6.4 GT/s	1333
A01-X0120	E5649	2.53	80	12	6	5.86 GT/s	1333
UCS-CPU-E5645	E5645	2.40	80	12	6	5.86 GT/s	1333
A01-X0111	E5620	2.40	80	12	4	5.86 GT/s	1066
A01-X0106	L5640	2.26	60	4	6	5.86 GT/s	1333
A01-X0107	L5630	2.13	40	12	4	5.86 GT/s	1066
A01-X0123	E5606	2.13	80	8	4	4.8 GT/s	1066
A01-X0108	L5609	1.86	40	12	4	4.8 GT/s	1066

Notes . . .

1. If higher or lower speed DIMMs are selected than what is shown in the table for a given CPU, the DIMMs will be clocked at the lowest common denominator of CPU clock and DIMM clock. For example:

   Selecting lower-speed DIMMs: If you use an X5650 CPU (which can support up to 1333-MHz DIMMs) with 1066-MHz DIMMs, the DIMMs will be clocked at the lower speed of 1066 MHz.

   Selecting higher-speed DIMMs: If you use 1333-MHz DIMMs with an E5620 (which can support up to 1066-MHz DIMMs), the DIMMS will be clocked at the lower speed of 1066 MHz.

Approved Configurations

(1) 1-CPU configurations:

- Select any one CPU listed in *Table 3*.

(2) 2-CPU Configurations:

- Select two identical CPUs from any one of the rows of *Table 3 on page 10*.

Caveats

- You can select either one processor or two identical processors.
- For optimal performance, select DIMMs with the highest clock speed for a given processor (see *Table 3 on page 10*). If you select DIMMs whose speeds are lower or higher than that shown in the tables, suboptimal performance will result.

STEP 3 SELECT MEMORY

The standard memory features are:

- DIMMs
  - Clock speed: 800 MHz, 1066 MHz, or 1333 MHz
  - Ranks per DIMM: 1, 2, or 4
  - Operational voltage: single voltage (1.5 V) or dual voltage (1.35 V/1.5 V)
  - Registered
- DDR3 ECC registered DIMMs (RDIMMs), supporting Intel SDDC
- Memory is organized with three memory channels per CPU, with up to two DIMMs per channel, as shown in *Figure 5*.

Figure 5 C200 M2 SFF Memory Organization

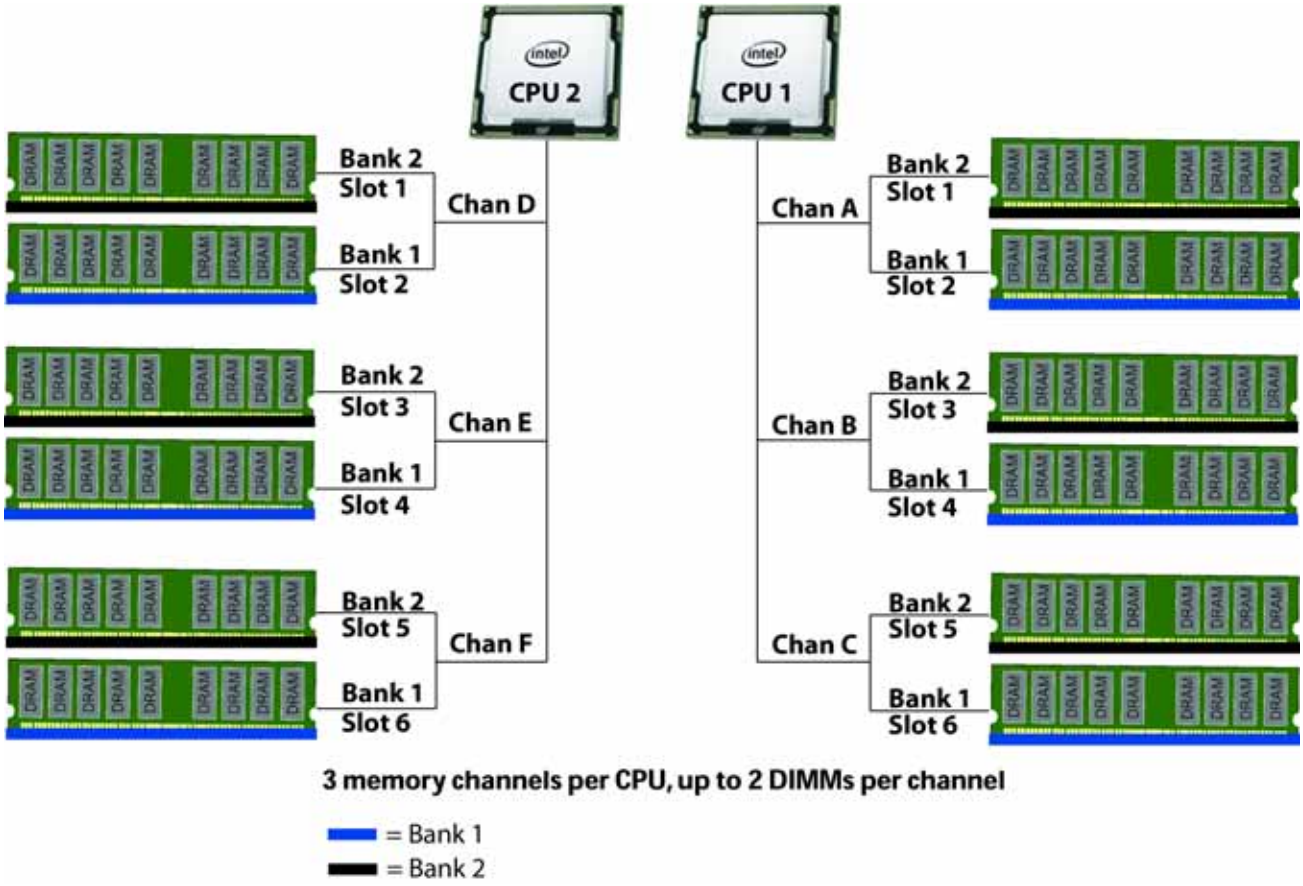

Select DIMMs and Memory Mirroring

Select the memory configuration and whether or not you want the memory mirroring option. The available memory DIMMs and mirroring option are listed in *Table 4*.

NOTE: When memory mirroring is enabled, the memory subsystem simultaneously writes identical data to two channels. If a memory read from one of the channels returns incorrect data due to an uncorrectable memory error, the system automatically retrieves the data from the other channel. A transient or soft error in one channel does not affect the mirrored data, and operation continues unless there is a simultaneous error in exactly the same location on a DIMM and its mirrored DIMM. Memory mirroring reduces the amount of memory available to the operating system by 50% because only one of the two populated channels provides data.

Table 4 Available DDR3 DIMMs

Product ID (PID)	PID Description	Voltage	Ranks /DIMM
DIMM Options			
UCS-MR-1X041RY-A	4GB DDR3-1600-MHz RDIMM/PC3-12800/1R/dual voltage	1.35/1.5 V	1
UCS-MR-1X082RY-A	8GB DDR3-1600-MHz RDIMM/PC3-12800/2R/x4/dual voltage	1.35/1.5 V	2
UCS-MR-1X162RY-A	16GB DDR3-1600-MHz RDIMM/PC3-12800/dual rank/1.35v	1.35	2
Memory Mirroring Option			
N01-MMIRROR	Memory mirroring option		

Approved Configurations

(1) 1-CPU configuration without memory mirroring:

- Select from one to six DIMMs (note that there are six DIMM slots per CPU)

(2) 1-CPU configuration with memory mirroring:

- Select either two or four DIMMs. The DIMMs will be placed by the factory as shown in the following table:

Number of DIMMs	DIMM Placement in Channels (Channel C is not used with memory mirroring)
2	1 DIMM in Channel A, 1 DIMM in Channel B
4	2 DIMMs in Channel A, 2 DIMMs in Channel B

- Select the memory mirroring option (N01-MMIRROR) as shown in *Table 4 on page 13*.

(3) 2-CPU configuration without memory mirroring:

- Select from one to six DIMMs per CPU (from two to twelve total DIMMs)

(4) 2-CPU configuration with memory mirroring:

- Select two or four DIMMs per CPU. The DIMMs will be placed by the factory as shown in the following table:

Number of DIMMs per CPU	DIMM Placement (Channels C and F are not used with memory mirroring)	
2	CPU 1: 1 DIMM in Channel A 1 DIMM in Channel B	CPU 2: 1 DIMM in Channel D 1 DIMM in channel E
4	CPU 1: 2 DIMMs in Channel A 2 DIMMs in Channel B	CPU 2: 2 DIMMs in Channel D 2 DIMMs in Channel E

- Select the memory mirroring option (N01-MMIRROR) as shown in *Table 4 on page 13*.

NOTE: System performance is optimized when the DIMM type and quantity are equal for both CPUs.

Caveats

- DIMM voltage:
  - You can mix dual voltage DIMMs (operate at either 1.5 V or 1.35 V) and single voltage DIMMs (operate at only 1.5 V).
  - Dual-voltage DIMMs can be operated in either of these modes:
    - Power Saving Mode at a maximum speed of 1066 MHz
    - Performance Mode at a maximum speed of 1333 MHz

    If you mix both types of DIMMs in your configuration, the server forces all DIMMs to operate in Performance Mode.
- Memory mirroring:

  If you select the Memory RAS option, be aware that it is available only with an even number of memory channels. For example, if you select six DIMMs and select Reliability/Availability/Serviceability (RAS), mirroring will go into effect on only two

channels with two DIMMS per channel (you cannot implement RAS on three channels). In this case, two DIMMS would go unused.

NOTE: For memory mirroring, DIMM pairing across buses must be identical. If you only have two DIMMs, they need to be the same PID because you have one DIMM on each of two buses.

If you have four DIMMs in a 2-CPU system, for example, you can have two 4-GB and two 8-GB DIMMs. One 4-GB/8-GB DIMM pair would located on Channel A of CPU 1, and one 4-GB/8-GB DIMM pair would be located on Channel D of CPU 2.

If you have four DIMMs in a 1-CPU system, for example, you can have two 4-GB and two 8-GB DIMMs. One 4-GB/8-GB DIMM pair would located on Channel A of CPU 1, and one 4-GB/8-GB DIMM pair would be located on Channel B of CPU 1.

For more information regarding memory, see *CPUs and DIMMs, page 45*.

STEP 4 SELECT RAID CONFIGURATION

The base server motherboard comes with an integrated SATA RAID 0/1 controller, which supports up to four SATA drives only (SAS drives are not supported). Therefore, a controller is not required when ordering SATA drives and a RAID 0 or 1 configuration is desired.

You can use the built-in SATA RAID 0/1 controller or you can also choose to implement other RAID configurations by using optional plug-in PCIe cards or an optional mezzanine board on the server motherboard.

Cisco can provide factory-configured RAID 0, 1, 1E, 5, 6, and 10 systems depending on the RAID card chosen and the number of drives ordered. Factory-configured RAID options are listed with each RAID card description. Note that RAID levels 50 and 60 are supported on the 9280-4i4e and 9260-8i, but are not factory configurable.

Select RAID Options

Select one RAID controller, one RAID configuration option, and, if desired, a battery backup option listed in *Table 5*.

Table 5 Available RAID Options

Product ID (PID)	PID Description
RAID Controllers	
UCSC-RAID-C-4I4E	LSI MegaRAID SAS 9280-4i4e, four internal and four external ports ■ Takes up one of two available PCIe slots ■ Supports up to four internal SAS or SATA drives (no mixing) ■ Supports external JBOD expansion ■ Battery backup option available (see the RAID Battery Backup PID section later in this table) ■ Factory-configured RAID options: RAID 0, 1, 5, 6, 10, 50, and 60 supported (see the RAID PIDs section in this table for factory configurable options)
RC460-PL001	LSI MegaRAID SAS 9260-8i (RAID 0, 1, 5, 6, 10) ■ Takes up one of two available PCIe slots ■ Supports up to eight SAS and/or SATA drives ■ Includes 512 MB of write cache ■ Battery backup option available (see the RAID Battery Backup PID section later in this table) ■ Factory-configured RAID options: RAID 0, 1, 5, 6, 10, 50, and 60 supported (see the RAID PIDs section in this table for factory configurable options)

Table 5 Available RAID Options *(continued)*

Product ID (PID)	PID Description
UCSC-RAID-SFFC200	LSI 1068E 8-port SAS 3.0G RAID Mezzanine ■ Installed on the mezzanine connector inside the UCS C200 M2 server ■ Supports up to eight SAS or SATA hard disk drives ■ No battery backup. ■ Factory-configured RAID options: RAID 0, 1, 10
RAID Battery Backup Option (not available with mezzanine card)	
UCSC-LBBU02	Battery Backup
	CAUTION: If one of your RAID cards is equipped with a battery backup unit (BBU), be aware that hot swapping the BBU is not supported. Please perform a graceful shutdown of the server prior to replacing the BBU.
RAID Configuration (note: Mezzanine card supports only RAID 0, 1, and 1E)	
R2XX-RAID0	Factory preconfigured RAID striping option Enable RAID 0 Setting. Requires a minimum of one hard drive.
R2XX-RAID1	Factory preconfigured RAID mirroring option Enable RAID 1 Setting. Requires exactly two drives with the same size, speed, capacity.
R2XX-RAID5	Factory preconfigured RAID option Enable RAID 5 Setting. Requires a minimum of three drives of the same size, speed, capacity.
R2XX-RAID6	Factory preconfigured RAID option Enable RAID 6 Setting. Requires a minimum of four drives of the same size, speed, capacity.
R2XX-RAID10	Factory preconfigured RAID option Enable RAID 10 Setting. Requires a even number of drives (minimum of four drives) of the same size, speed, capacity.

NOTE: No RAID option can be chosen if you have one of the following configurations:

- A mix of SAS and SATA drives
- No drives

Approved Configurations

(1) Integrated SATA RAID 0/1 controller

- Select none of the options listed in *Table 5*. In this case, the integrated RAID 0/1 controller, which supports up to four SATA-only drives, will be used.

(2) Optional RAID controller

- Select one of the RAID controllers options (with or without battery backup) listed in *Table 5*.

(3) Optional RAID configuration

- Select one of the RAID configuration options listed in *Table 5*.

NOTE: If an optional RAID configuration is not chosen, the disks will be configured as a JBOD.

Caveats

- The two optional RAID controllers are half-height PCIe cards. If you choose one of these optional cards, only the full-height PCIe card slot will be available for adding an optional PCIe card.
- If you choose the mezzanine card, both the half-height and full-height PCIe card slots are still available for adding optional PCIe cards.
- You can choose only one RAID controller (integrated controller, plug-in PCIe controller, or mezzanine card controller).
- You can choose an optional RAID configuration (RAID 0, 1, 5, 1E, 6, or 10), which is preconfigured at the factory. If you do not choose a RAID configuration, the disks will be configured as a JBOD.

STEP 5 SELECT HARD DISK DRIVES (HDDs) or SOLID STATE DRIVES (SSDs)

The standard disk drive features are:

- 2.5-inch small form factor
- Hot-pluggable
- Sled-mounted

Select Drives

The available drives are listed in *Table 6*.

Table 6 Available Hot-Pluggable Sled-Mounted HDDs and SSDs

Product ID (PID)	PID Description	Drive Type	Capacity
HDDs			
A03-D146GC2	146 GB SAS 15K RPM SFF HDD	SAS	146 GB
A03-D300GA2	300 GB 6 Gb SAS 10K RPM SFF HDD	SAS	300 GB
UCS-HDD300GI2F105	300 GB 6 Gb SAS 15K RPM SFF HDD	SAS	300 GB
A03-D500GC3	500 GB 6 Gb SATA 7.2K RPM SFF	SATA	500 GB
A03-D600GA2	600 GB 6 Gb SAS 10K RPM SFF HDD	SAS	600 GB
UCS-HDD900GI2F106	900 GB 6 Gb SAS 10K RPM SFF HDD	SAS	900 GB
A03-D1TBSATA	1 TB SATA 7.2K RPM SFF HDD	SATA	1 TB
SSDs			
UCS-SSD100GI1F104	NEW 100GB SATA SSD SFF (STEC)	SATA	100 GB

Approved Configurations

(1) Integrated SATA RAID 0/1 controller

- Select up to four SATA (only) drives listed in *Table 6*. You cannot mix HDDs and SSDs.

(2) LSI MegaRAID SAS 9280-4i4e RAID controller

- Select up to four SAS or up to four SATA drives listed in *Table 6* (you can mix SAS/SATA drives; you cannot mix HDD/SSD drives)

(3) LSI MegaRAID SAS 9260-8i RAID controller

- Select up to eight SAS or SATA drives listed in *Table 6* (you can mix SAS/SATA drives; you cannot mix HDD/SSD drives)

(4) LSI 1068 8-port SAS 3.0G RAID) mezzanine card RAID controller

- Select up to eight SAS or SATA drives listed in *Table 6* (SAS/SATA can be mixed; HDD/SSD cannot)

Caveats

- If the integrated RAID controller on the server motherboard is used (no PCIe or mezzanine controller selected), you must select all SATA drives.
- If you selected a RC460-PL001 MegaRAID controller or the UCSC-RAID-SFFC200 mezzanine card RAID controller, you can select up to eight SAS or SATA drives.
- You cannot mix HDDs and SSDs.

STEP 6 SELECT PCIe OPTION CARD(s)

The standard PCIe card offerings are:

- Ethernet
- Fibre Channel
- iSCSI
- Virtual Interface Card (VIC)

Select PCIe Option Cards

The available PCIe option cards are listed in *Table 7*.

Table 7 Available PCIe Option Cards

Product ID (PID)	PID Description	Card Height
Converged Network Adapters (CNAs)		
N2XX-ACPCI01	Cisco UCS P81E Virtual Interface Card/ 2-port 10Gbps	Full
N2XX-AEPCI01	Emulex OneConnect OCe10102-F CNA 2-port 10Gbps	Half
UCSC-PCIE-BSFP	Broadcom 57712 Dual Port 10Gb SFP+ w/TOE iSCSI	Half
Network Interface Cards (NICs)		
N2XX-ABPCI02	Broadcom 57711 Dual Port 10GbE NIC w/TOE iSCSI	Half
N2XX-ABPCI03-M3	Broadcom 5709 Quad Port 1Gb w/TOE iSCSI for M3 Servers	Half
N2XX-ABPCI01-M3	Broadcom 5709 Dual Port 1Gb w/TOE iSCSI for M3 Servers	Half
N2XX-AQPCI01	Qlogic QLE 8152-CNA 2port 10Gb SFP+ Copper	Half
N2XX-AIPCI02	Intel Quad port GbE Controller (E1G44ETG1P20)	Half
N2XX-AIPCI01	Intel X520 Dual Port 10Gb SFP+ Adapter	Half
N2XX-AMPCI01	Mellanox ConnectX-2 EN with dual 10GbE SFP+ ports	Half
Host Bus Adapters (HBAs)		
N2XX-AEPCI03	Emulex LPe 11002 Dual Port 4Gb Fibre Channel HBA	Half
N2XX-AEPCI05	Emulex LPe 12002 Dual Port 8Gb Fibre Channel HBA	Half
N2XX-AQPCI03	Qlogic QLE2462 Dual Port 4Gb Fibre Channel HBA	Half
N2XX-AQPCI05	Qlogic QLE2562 Dual Port 8Gb Fibre Channel HBA	Half

Approved Configurations

(1) No RAID controller plug-in card

- If you did not choose a plug-in RAID controller (for example, you are using the mezzanine card or the interated RAID controller on the motherboard), you can select up to two PCIe option cards listed in *Table 7*.

(2) One RAID controller plug-in card

- If you selected a plug-in RAID controller, select one of the optional PCIe cards listed in *Table 7*.

NOTE: If a plug-in RAID controller card is installed, any optional PCIe card you select will be installed in the full-height slot. RAID controllers are always installed in the half-height slot.

Caveats

- There are two PCIe slots. One is a half-height slot and the other is a full-height slot. All of the PCIe adapter cards are half-height cards, with the exception of the Virtual Interface Card (VIC) (N2XX-ACPCI01), which is a full-height card.
  - If you selected a plug-in RAID controller into the half-height slot in *STEP 4 SELECT RAID CONFIGURATION*, only the full-height slot is available.
  - Only a single VIC card may be installed and it must be installed in a full-height slot.
  - All cards will fit in either slot, except the VIC card, which must be installed in the full-height slot (slot 6).
- To help ensure that your operating system is compatible with the card you have selected, check the Hardware Compatibility List at this URL:

  http://www.cisco.com/en/US/products/ps10477/prod_technical_reference_list.html

STEP 7 ORDER OPTIONAL NETWORK CARD ACCESSORIES

Copper twinax cables and SFP optical modules may be ordered to support the two-port network cards that are available with the server.

Choose Optional Twinax Cables

Copper twinax cables are listed in *Table 8*. You can choose cable lengths of 1, 3, 5, 7, or 10 meters. The two longer cables (7 and 10 meters) are active, which means that they contain active components within the SFP+ housing to improve signal quality.

Table 8 Available Twinax Cables

Product ID (PID)	PID Description
SFP-H10GB-CU1M	10GBASE-CU SFP+ Cable (1 M)
SFP-H10GB-CU3M	10GBASE-CU SFP+ Cable (3 M)
SFP-H10GB-CU5M	10GBASE-CU SFP+ Cable (5 M)
SFP-H10GB-ACU7M	10GBASE-CU SFP+ Cable (7 M)
SFP-H10GB-ACU10M	10GBASE-CU SFP+ Cable (10 M)

Approved Configurations

(1) Choose Up to Two Twinax Cables for Each Network Card Ordered

- You may choose one or two twinax cables for each network card ordered. The cables can be different lengths; however, you would normally order two cables of equal lengths to connect to the primary and redundant network switching equipment.

Caveats

The twinax cables listed in *Table 8* can be ordered only for the following PCIe cards:

- N2XX-ACPCI01 (Cisco UCS P81E Virtual Interface Card/ 2-port 10Gbps)
- UCS-PCIE-BSFP (Broadcom 57712)
- N2XX-ABPCI02 (Broadcom 57711)
- N2XX-AEPCI01 (Emulex OCe10102-F)
- N2XX-AIPCI01 (Intel Dual Port Ethernet X520)
- N2XX-AQPCI01 (Qlogic QLE 8152-CNA)

Choose Optional SFP Modules

Optical Cisco SFP+ modules are listed in *Table 9*.

Table 9 Available SFP Modules

Product ID (PID)	PID Description
SFP-10G-SR	10GBASE-SR SFP+ Module 850 nm, multimode, SR, 3.3V, LC connector, with Digital Optical Monitoring
DS-SFP-FC8G-SW	8 Gbit SFP+ Module 850 nm, multimode, SR, 3.3V, LC connector, with Digital Optical Monitoring

Approved Configurations

(1) Choose Up to Two SFP+ Modules for Each Network Card Ordered

- You may choose one or two SFP+ optical modules cables for each network card ordered. You would normally order two modules for connecting to the primary and redundant network switching equipment. With the SFP+ optical modules, you can use common fiber optic cables, widely available.

See *Figure 6 on page 25* for typical SFP+ and twinax connections to the network cards.

Caveats

The SFP-10G-SR optical module listed in *Table 9* should be ordered only for the following PCIe cards, as they do not come by default with any opical modules:

- N2XX-ACPCI01 (Cisco UCS P81E Virtual Interface Card/ 2-port 10Gbps)
- UCSC-PCIE-BSFP (Broadcom 57712)
- N2XX-ABPCI02 (Broadcom 57711)
- N2XX-AEPCI01 (Emulex OCe10102-F)

The DS-SFP-FC8G-SW optical module listed in *Table 9* should be ordered only for the following PCIe cards, as they do not come by default with any opical modules:

- N2XX-AEPCI05 (Emulex LPe 12002 Dual Port 8Gb Fibre Channel HBA)

Figure 6 Network Card Connections

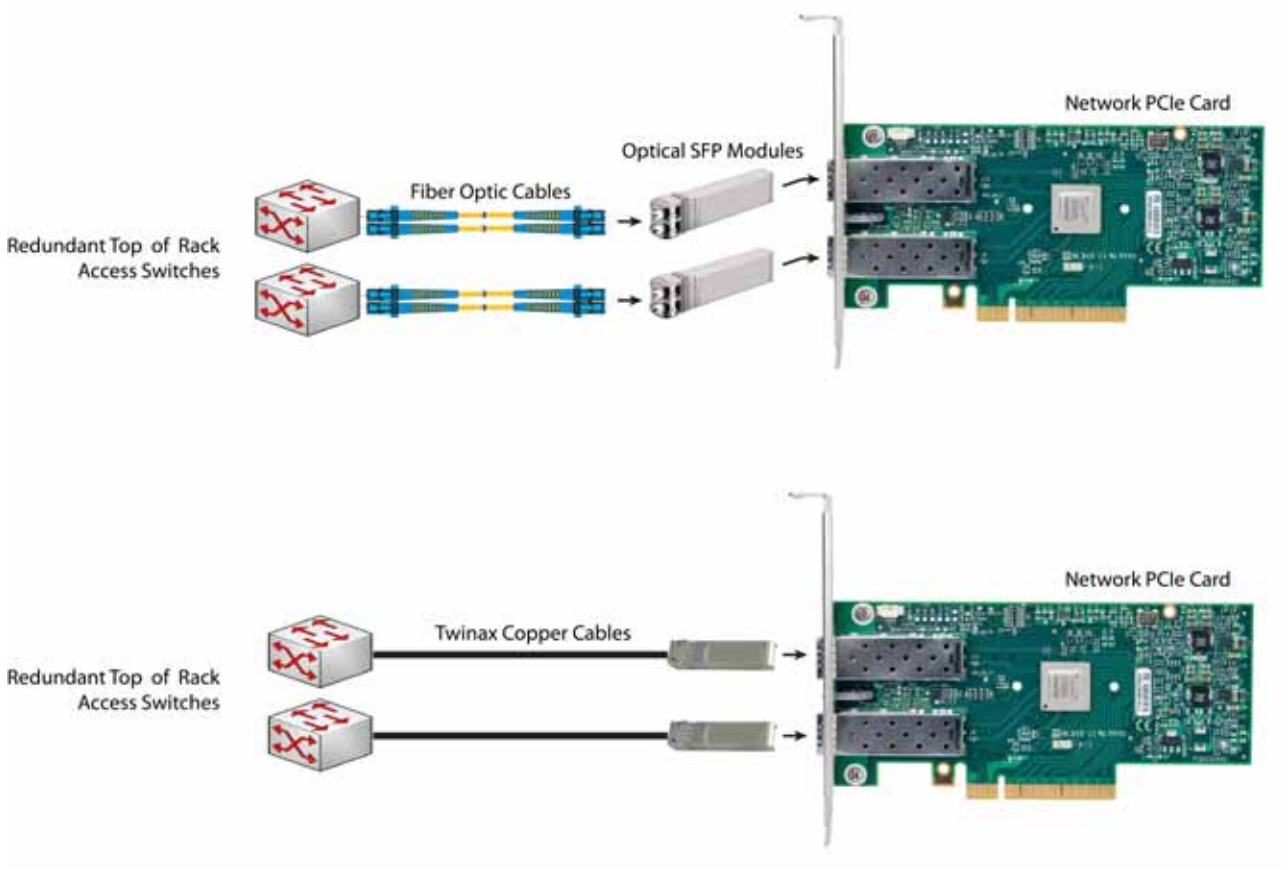

STEP 8 SELECT OPTIONAL DVD-RW DRIVE

The front panel offerings are:

- Controller panel, or
- DVD-RW drive, with dual-layer (DL) support

The standard offering is a controller panel. See *Figure 2 on page 4* for a representation of both offerings.

Select Front Panel Configuration

The available front panel configurations are listed in *Table 10*.

Table 10 Available Front Panel Configurations

Product ID (PID)	PID Description
UCSC-CON-SFF-C200	Controller panel for UCS C200 SFF Rack Server
UCSC-DVD-SFF-C200	DVD-RW Drive for UCS C200 M2 SFF Rack Server

Approved Configurations

(1) Select the controller panel, or

(2) Select the optional DVD-RW optical drive

Caveats

- The DVD-RW optical drive is optional. If you order it, you will not have a front panel controller, and some connectors, LEDs, and controls will no longer be available. The optical drive supports dual-layer media.

STEP 9 ORDER OPTIONAL REDUNDANT POWER SUPPLY

The C200 M2 server can accommodate two power supplies. Only one power supply is required. One 650 W power supply ships with the base server chassis. You can order an optional redundant power supply (see *Table 11*).

Table 11 Redundant Power Supply

Product ID (PID)	PID Description
R2X0-PSU2-650W-SB	Redundant 650 W power supply.

STEP 10 SELECT AC POWER CORD(s)

Using *Table 12*, select the appropriate AC power cords. You can select a minimum of no power cords and a maximum of two. If you select the option R2XX-DMYMPWRCORD, no power cord is shipped with the server.

Table 12 Available Power Cords

Product ID (PID)	PID Description	Images
R2XX-DMYMPWRCORD	No power cord (dummy PID to allow for a no power cord option)	Not applicable
CAB-N5K6A-NA	Power Cord, 200/240V 6A, North America	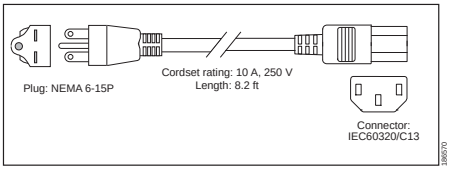
CAB-AC-250V/13A	Power Cord, NEMA L6-20 250V/20A plug-IEC320/C13 receptacle, North America,	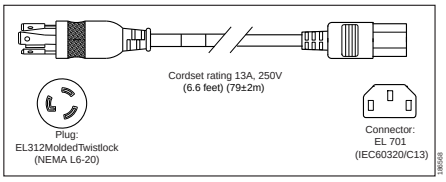
CAB-C13-C14-JMPR	Power Cord, recessed receptacle AC power cord 27	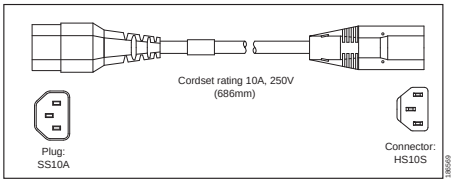
SFS-250V-10A-AR	Power Cord, SFS, 250V, 10A, Argentina	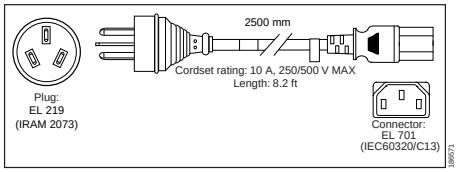
CAB-9K10A-AU	Power Cord, 250VAC 10A 3112 Plug, Australia	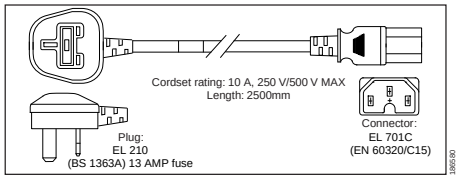

Table 12 Available Power Cords

Product ID (PID)	PID Description	Images
SFS-250V-10A-CN	Power Cord, SFS, 250V, 10A, China	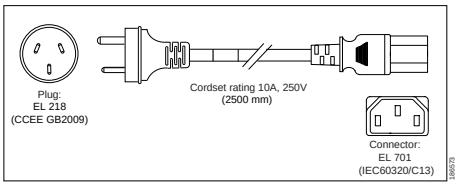
CAB-9K10A-EU	Power Cord, 250VAC 10A CEE 7/7 Plug, EU	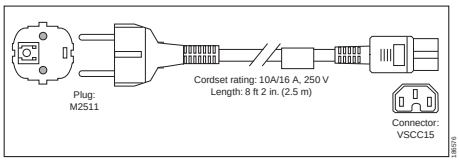
SFS-250V-10A-ID	Power Cord, SFS, 250V, 10A, India	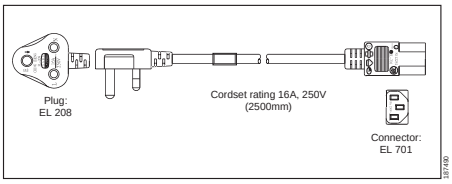
SFS-250V-10A-IS	Power Cord, SFS, 250V, 10A, Israel	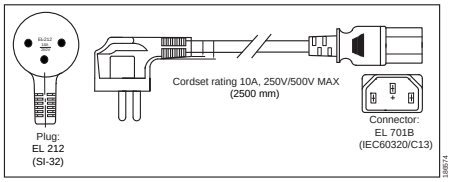
CAB-9K10A-IT	Power Cord, 250VAC 10A CEI 23-16/VII Plug, Italy	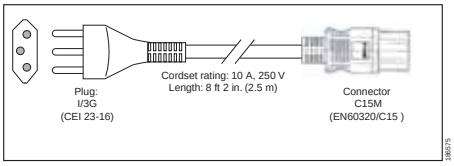
CAB-9K10A-SW	Power Cord, 250VAC 10A MP232 Plug, Switzerland	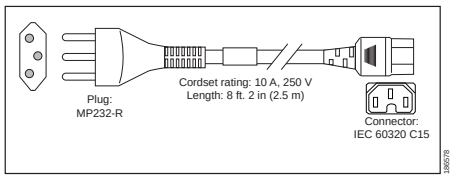
CAB-9K10A-UK	Power Cord, 250VAC 10A BS1363 Plug (13 A fuse), UK	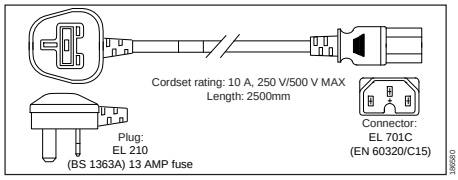

Table 12 Available Power Cords

Product ID (PID)	PID Description	Images
CAB-9K12A-NA	Power Cord, 125VAC 13A NEMA 5-15 Plug, North America	Image not available
CAB-JPN-3PIN	Power Cord 3PIN, Japan	Image not available

STEP 11 ORDER OPTIONAL TOOL-LESS RAIL KIT

A rail kit is not included with the Cisco UCS C200 M2 base server chassis, but you can order the tool-less rail kit listed in *Table 13*.

Table 13 Rail Kit

Product ID (PID)	PID Description
R2XX-G31032RAIL	UCS C200, C210 Rack Server Rail Kit

NOTE: This third-generation rail kit works in racks with square holes or 10-32 round holes and is shorter than the previous generation rail kit. The new R2XX-G31032RAIL measures 23.5 inches to 36 inches in length. By comparison, the previous version, R250-SLDRAIL, measured 27 inches to 37 inches in length.

See the section titled *OPTIONAL STEP - ORDER RACK(s), page 42* for information about racks and rack equipment.

STEP 12 ORDER OPTIONAL CABLE MANAGEMENT ARM

The cable management arm hooks onto the right and left slide rails at the rear of the server and is used for cable management. Use *Table 14* to order a cable management arm.

Table 14 Cable Management Arm

Product ID (PID)	PID Description
R2XX-CMAG3-1032	Cable Mgmt Arm for R2XX-G31032RAIL for C200/C210

For more information about the cable management arm, see the *Cisco UCS C200 Installation and Service Guide* at this URL:

http://www.cisco.com/en/US/docs/unified_computing/ucs/c/hw/C200M1/install/c200M1.html

STEP 13 ORDER A TRUSTED PLATFORM MODULE

Trusted Platform Module (TPM) is a computer chip (microcontroller) that can securely store artifacts used to authenticate the platform (server). These artifacts can include passwords, certificates, or encryption keys. A TPM can also be used to store platform measurements that help ensure that the platform remains trustworthy. Authentication (ensuring that the platform can prove that it is what it claims to be) and attestation (a process helping to prove that a platform is trustworthy and has not been breached) are necessary steps to ensure safer computing in all environments.

The TPM ordering information is listed in *Table 15*.

Table 15 Trusted Platform Module

Product ID (PID)	PID Description
R200-TPM1	Trusted Platform Module

STEP 14 SELECT OPERATING SYSTEM AND VALUE-ADDED SOFTWARE

Several operating systems and value-added software programs are available. Select as desired from *Table 16*.

Table 16 OSs and Value-Added Software (for 2-CPU servers)

PID Description	Product ID (PID)
Cisco One	
C1F2PUCSK9	Cisco ONE Foundation Perpetual UCS
C1F2SICFBK9	Cisco ONE Foundation Subsr Intercloud Fabric For Business
C1A1PUCSK9	Cisco ONE Enterprise Cloud Perpetual UCS
C1UCS-OPT-OUT	Cisco One Data Center Compute Opt Out Option
Microsoft Windows Server	
MSWS-12-ST2S	Windows Server 2012 Standard (2 CPU/2 VMs)
MSWS-12-DC2S	Windows Server 2012 Datacenter (2 CPU/Unlimited VMs)
MSWS-12-ST2S-NS	Windows Server 2012 Standard (2 CPU/2 VMs) No Cisco SVC
MSWS-12-DC2S-NS	Windows Server 2012 Datacenter (2 CPU/Unlim VM) No Cisco SVC
MSWS-12R2-ST2S	Windows Server 2012 R2 Standard (2 CPU/2 VMs)
MSWS-12R2-DC2S	Windows Server 2012 R2 Datacenter (2 CPU/Unlimited VMs)
MSWS-12R2-ST2S-NS	Windows Server 2012 R2 Standard (2 CPU/2 VMs) No Cisco SVC
MSWS-12R2-DC2S-NS	Windows Server 2012 R2 Datacen (2 CPU/Unlim VM) No Cisco Svc
SUSE	
SLES-2S2V-1A	SUSE Linux Enterprise Srvr (1-2 CPU,1 Phys);1yr Support Reqd
SLES-2S2V-3A	SUSE Linux Enterprise Srvr (1-2 CPU,1 Phys);3yr Support Reqd
SLES-2S2V-5A	SUSE Linux Enterprise Srvr (1-2 CPU,1 Phys);5yr Support Reqd
SLES-2SUV-1A	SUSE Linux Enterprise Svr (1-2 CPU,Unl Vrt);1yr Support Reqd
SLES-2SUV-3A	SUSE Linux Enterprise Svr (1-2 CPU,Unl Vrt);3yr Support Reqd
SLES-2SUV-5A	SUSE Linux Enterprise Svr (1-2 CPU,Unl Vrt);5yr Support Reqd
SLES-2S-HA-1S	SUSE Linux High Availability Ext (1-2 CPU); 1yr Support Reqd
SLES-2S-HA-3A	SUSE Linux High Availability Ext (1-2 CPU); 3yr Support Reqd
SLES-2S-HA-5A	SUSE Linux High Availability Ext (1-2 CPU); 5yr Support Reqd
SLES-2S-GC-1S	SUSE Linux GEO Clustering for HA (1-2 CPU); 1yr Support Reqd
SLES-2S-GC-3S	SUSE Linux GEO Clustering for HA (1-2 CPU); 3yr Support Reqd
SLES-2S-GC-5S	SUSE Linux GEO Clustering for HA (1-2 CPU); 5yr Support Reqd
SLES-SAP-2S2V-1A	SLES for SAP Applications (1-2 CPU,1 Phys); 1yr Support Reqd
SLES-SAP-2S2V-3A	SLES for SAP Applications (1-2 CPU,1 Phys); 3yr Support Reqd
SLES-SAP-2S2V-5A	SLES for SAP Applications (1-2 CPU,1 Phys); 5yr Support Reqd
SLES-SAP-2SUV-1A	SLES for SAP Applications (1-2 CPU,Unl Vrt);1yr Support Reqd
SLES-SAP-2SUV-3A	SLES for SAP Applications (1-2 CPU,Unl Vrt);3yr Support Reqd
SLES-SAP-2SUV-5A	SLES for SAP Applications (1-2 CPU,Unl Vrt);5yr Support Reqd
Nexus 1000V for Hyper-V and vSphere	

Table 16 OSs and Value-Added Software (for 2-CPU servers) *(continued)*

PID Description	Product ID (PID)
N1K-VSG-UCS-BUN	Over half off N1K and VSG w/ purchase of UCS B/C Series
N1K-VLEM-UCS-1	Nexus 1000V License Paper Delivery (1 CPU) for bundles
VSG-VLEM-UCS-1	VSG License Paper Delivery (1 CPU) for bundles
UCS Director	
CUIC-PHY-SERV-BM-U	Cisco Cloupia Resource Lic - One Phy Server node bare metal
CUIC-PHY-SERV-U	Cisco Cloupia Resource Lic - One physical Server node
CUIC-TERM	Acceptance of Cisco Cloupia License Terms
UCS Performance Manager	
UCS-PM-IE	UCS Performance Manager
UCS-PM-EE	UCS Performance Manager Express
EVAL-UCS-PM-IE	UCS Performance Manager - 60 days evaluation
EVAL-UCS-PM-EE	UCS Performance Manager Express - 60 days evaluation
NFR-UCS-PM-IE	UCS Performance Manager - Not For Resale
NFR-UCS-PM-EE	CS Performance Manager Express - Not For Resale
IMC Supervisor	
EVAL-CIMC-SUP	EVAL: IMC Supervisor-Branch Mgt SW for C/E-Series - 50 Svrs
EVAL-CIMC-SUP-BAS	EVAL: IMC Supervisor One-time Site Installation License
CIMC-SUP-B01	IMC Supervisor-Branch Mgt SW for C-Series & E-Series up to 100 Svrs
CIMC-SUP-B02	IMC Supervisor- Branch Mgt SW for C-Series & E-Series up to 250 Svrs
CIMC-SUP-B10	IMC Supervisor- Branch Mgt SW for C-Series & E-Series up to 1K Svrs
CIMC-SUP-BASE-K9	IMC Supervisor One-time Site Installation License
CIMC-SUP-TERM	Acceptance of Cisco IMC Supervisor License Terms
VMware 5	
VMW-VS5-STD-1A	VMware vSphere 5 Standard for 1 Processor, 1 Year, Support Rqd
VMW-VS5-STD-2A	VMware vSphere 5 Standard for 1 Processor, 2 Year, Support Rqd
VMW-VS5-STD-3A	VMware vSphere 5 Standard for 1 Processor, 3 Year, Support Rqd
VMW-VS5-STD-4A	VMware vSphere 5 Standard for 1 Processor, 4 Year, Support Rqd
VMW-VS5-STD-5A	VMware vSphere 5 Standard for 1 Processor, 5 Year, Support Rqd
VMW-VS5-ENT-1A	VMware vSphere 5 Enterprise for 1 Processor, 1 Year Support Rqd
VMW-VS5-ENT-2A	VMware vSphere 5 Enterprise for 1 CPU, 2 Yr Support Rqd
VMW-VS5-ENT-3A	VMware vSphere 5 Enterprise for 1 CPU, 3 Yr Support Rqd
VMW-VS5-ENT-4A	VMware vSphere 5 Enterprise for 1 Processor, 4 Year Support Rqd
VMW-VS5-ENT-5A	VMware vSphere 5 Enterprise for 1 CPU, 5 Yr Support Rqd
VMW-VS5-ENTP-1A	VMware vSphere 5 Enterprise Plus for 1 Processor, 1 Year Support Rqd
VMW-VS5-ENTP-2A	VMware vSphere 5 Enterprise Plus for 1 CPU, 2 Yr Support Rqd
VMW-VS5-ENTP-3A	VMware vSphere 5 Enterprise Plus for 1 Processor, 3 Year Support Rqd
VMW-VS5-ENTP-4A	VMware vSphere 5 Enterprise Plus for 1 Processor, 4 Year Support Rqd
VMW-VC5-STD-1A	VMware vCenter 5 Server Standard, 1 yr support required
VMW-VC5-STD-2A	VMware vCenter 5 Server Standard, 2 yr support required

Table 16 OSs and Value-Added Software (for 2-CPU servers) *(continued)*

PID Description	Product ID (PID)
VMW-VC5-STD-3A	VMware vCenter 5 Server Standard, 3 yr support required
VMW-VC5-STD-4A	VMware vCenter 5 Server Standard, 4 yr support required
VMW-VC5-STD-5A	VMware vCenter 5 Server Standard, 5 yr support required

STEP 15 SELECT OPERATING SYSTEM MEDIA KIT

Select the optional operating system media listed in *Table 17*.

Table 17 OS Media

Product ID (PID)	PID Description
RHEL-6	RHEL 6 Recovery Media Only (Multilingual)
SLES-11	SLES 11 media only (multilingual)
MSWS-08R2-STHV-RM	Windows Svr 2008 R2 ST (1-4CPU, 5CAL), Media
MSWS-08RS-ENHV-RM	Windows Svr 2008 R2 EN (1-8CPU, 25CAL), Media
MSWS-08R2-DCHV-RM	Windows Svr 2008 R2 DC (1-8CPU, 25CAL), Media
MSWS-12-ST2S-RM	Windows Server 2012 Standard (2 CPU/2 VMs) Recovery Media
MSWS-12-DC2S-RM	Windows Server 2012 Datacenter(2 CPU/Unlimited VM) Rec Media

STEP 16 SELECT SERVICE and SUPPORT LEVEL

A variety of service options are available, as described in this section.

Unified Computing Warranty, No Contract

If you have noncritical implementations and choose no service contract, the following coverage is supplied:

- Three-year parts coverage.
- Next business day (NBD) parts replacement eight hours a day, five days a week.
- 90-day software warranty on media.
- Downloads of BIOS, drivers, and firmware updates.
- UCSM updates for systems with Unified Computing System Manager. These updates include minor enhancements and bug fixes that are designed to maintain the compliance of UCSM with published specifications, release notes, and industry standards.

Unified Computing Mission Critical Service

This service delivers personalized technical account management, expedited technical support, and expert field support engineering for the Cisco Unified Computing System (UCS).

The Mission Critical Support Service provides a designated technical account manager (TAM) who acts as a strategic resource to help ensure that the unified computing environment runs at peak efficiency. If a problem arises that threatens business continuity, the TAM provides crisis management leadership, and your IT staff receives expedited access to Cisco's Technical Assistance Center (TAC).

Note: This service has qualification criteria. Your company must have $1.2M of UCS equipment, 200 blades, and a single location to qualify for this service level. Choose the desired service listed in *Table 18*.

Table 18 Unified Computing Mission Critical Service

Product ID (PID)	On Site?	Description
CON-UCM7-R200W	Yes	UC Mission Critical 24x7x4 On-site
CON-UCM8-R200W	Yes	UC Mission Critical 24x7x2 On-site

Unified Computing Support Service

For support of the entire Cisco Unified Computing System, Cisco offers the Cisco Unified Computing Support Service. This service provides expert software and hardware support to help sustain performance and high availability of the unified computing environment. Access to the Cisco Technical Assistance Center (TAC) is provided around the clock, from anywhere in the world.

For UCS blade servers, there is Smart Call Home, which provides proactive, embedded diagnostics and real-time alerts. For systems that include Unified Computing System Manager, the support service includes downloads of UCSM upgrades. The Unified Computing Support Service includes flexible hardware replacement options, including replacement in as little as

two hours. There is also access to Cisco's extensive online technical resources to help maintain optimal efficiency and uptime of the unified computing environment. You can choose a desired service listed in *Table 19*.

Table 19 UCS Computing Support Service

Product ID (PID)	On Site?	Description
CON-UCS1-R200W	No	UC Support 8X5XNBD
CON-UCS2-R200W	No	UC Support 8X5X4
CON-UCS3-R200W	No	UC Support 24x7x4
CON-UCS4-R200W	No	UC Support 24x7x2
CON-UCS5-R200W	Yes	UC Support 8X5XNBD
CON-UCS6-R200W	Yes	UC Support 8X5X4
CON-UCS7-R200W	Yes	UC Support 24x7x4
CON-UCS8-R200W	Yes	UC Support 24x7x2

Unified Computing Warranty Plus Service

For faster parts replacement than is provided with the standard Cisco Unified Computing System warranty, Cisco offers the Cisco Unified Computing Warranty Plus Service. You can choose from several levels of advanced parts replacement coverage, including onsite parts replacement in as little as two hours. Warranty Plus provides remote access any time to Cisco support professionals who can determine if a return materials authorization (RMA) is required. See *Table 20*.

Table 20 UCS Computing Warranty Plus Service

Product ID (PID)	On Site?	Description
CON-UCW2-R200W	No	UC Warranty Plus 8x5x4
CON-UCW3-R200W	No	UC Warranty Plus 24x7x4
CON-UCW4-R200W	No	UC Warranty Plus 24x7x2
CON-UCW5-R200W	Yes	UC Warranty Plus 8X5XNBD
CON-UCW6-R200W	Yes	UC Warranty Plus 8X5X4
CON-UCW7-R200W	Yes	UC Warranty Plus 24x7x4
CON-UCW8-R200W	Yes	UC Warranty Plus 24x7x2

Unified Computing Drive Retention Service

With the Cisco Unified Computing Drive Retention (UCDR) Service, you can obtain a new disk drive in exchange for a faulty drive without returning the faulty drive. In exchange for a Cisco replacement drive, you provide a signed Certificate of Destruction (CoD) confirming that the drive has been removed from the system listed, is no longer in service, and has been destroyed.

Sophisticated data recovery techniques have made classified, proprietary, and confidential information vulnerable, even on malfunctioning disk drives. The UCDR service enables you to retain your drives and ensures that the sensitive data on those drives is not compromised, which reduces the risk of any potential liabilities. This service also enables you to comply with regulatory, local, and federal requirements.

If your company has a need to control confidential, classified, sensitive, or proprietary data, you might want to consider one of the Drive Retention Services listed in *Table 21*.

NOTE: Cisco does not offer a certified drive destruction service as part of this service.

Table 21 Drive Retention Service Options

Service Description	Service Program Name	Service Level GSP	Service Level	Product ID (PID)
UCS Mission Critical Support Service With Drive Retention	UC CRIT DR	UCMD7	24x7x4 Onsite	CON-UCMD7-R200WSFF
		UCMD8	24x7x2 Onsite	CON-UCMD8-R200WSFF
UCS Support Service With Drive Retention	UC SUPP DR	UCSD1	8x5xNBD	CON-UCSD1-R200WSFF
		UCSD2	8x5x4	CON-UCSD2-R200WSFF
		UCSD3	24x7x4	CON-UCSD3-R200WSFF
		UCSD4	24x7x2	CON-UCSD4-R200WSFF
		UCSD5	8x5xNBD Onsite	CON-UCSD5-R200WSFF
		UCSD6	8x5x4 Onsite	CON-UCSD6-R200WSFF
		UCSD7	24x7x4 Onsite	CON-UCSD7-R200WSFF
		UCSD8	24x7x2 Onsite	CON-UCSD8-R200WSFF

Table 21 Drive Retention Service Options *(continued)*

Service Description	Service Program Name	Service Level GSP	Service Level	Product ID (PID)
UCS Warranty Plus With Drive Retention	UC PLUS DR	UCWD2	8x5x4	CON-UCWD2-R200WSFF
		UCWD3	24x7x4	CON-UCWD3-R200WSFF
		UCWD4	24x7x2	CON-UCWD4-R200WSFF
		UCWD5	8x5xNBD Onsite	CON-UCWD5-R200WSFF
		UCWD6	8x5x4 Onsite	CON-UCWD6-R200WSFF
		UCWD7	24x7x4 Onsite	CON-UCWD7-R200WSFF
		UCWD8	24x7x2 Onsite	CON-UCWD8-R200WSFF

For more service and support information, see this URL:

http://www.cisco.com/en/US/services/ps2961/ps10312/ps10321/Cisco_UC_Warranty_Support_DS.pdf

For a complete listing of available services for Cisco Unified Computing System, see this URL:

http://www.cisco.com/en/US/products/ps10312/serv_group_home.html

OPTIONAL STEP - ORDER RACK(s)

The optional R42610 rack is available from Cisco for the C-Series servers, including theC200 M2 SFF server. This rack is a standard 19-inch rack and can be ordered with a variety of options, as listed in *Table 22*. Racks are shipped separately from the C200 M2 SFF server.

Table 22 Racks and Rack Options

Product ID (PID)	PID Description
RACK-UCS[1]	Cisco R42610 expansion rack, no side panels
RACK-UCS2[1]	Cisco R42610 standard rack, w/side panels
RACK-BLANK-001	Filler panels (qty 12), 1U, plastic, toolless
RACK-CBLMGT-001	Cable mgt D rings (qty 10), metal
RACK-CBLMGT-011	Cable mgt straps (qty 10), Velcro
RACK-FASTEN-001	Mounting screws (qty 100), M6
RACK-FASTEN-002	Cage nuts (qty 50), M6
RACK-JOIN-001	Rack joining kit

Notes . . .

1. Use these same base PIDs to order spare racks (available only as next-day replacements).

For more information about the R42610 rack, see *RACKS, page 50*.

OPTIONAL STEP - ORDER PDU

An optional power distribution unit (PDU) is available from Cisco for the C-Series rack servers, including theC200 M2 server. This PDU is available in a zero rack unit (RU) style (see *Table 22*).

Table 23 PDU Options

Product ID (PID)	PID Description
RP208-30-2P-U-2	Zero RU PDU

For more information about the PDU, see *PDUs, page 52*.

SUPPLEMENTAL MATERIAL

CHASSIS

An internal view of the C200 M2 chassis with the top cover removed is shown in *Figure 7*.

Figure 7 C200 M2 SFF With Top Cover Off

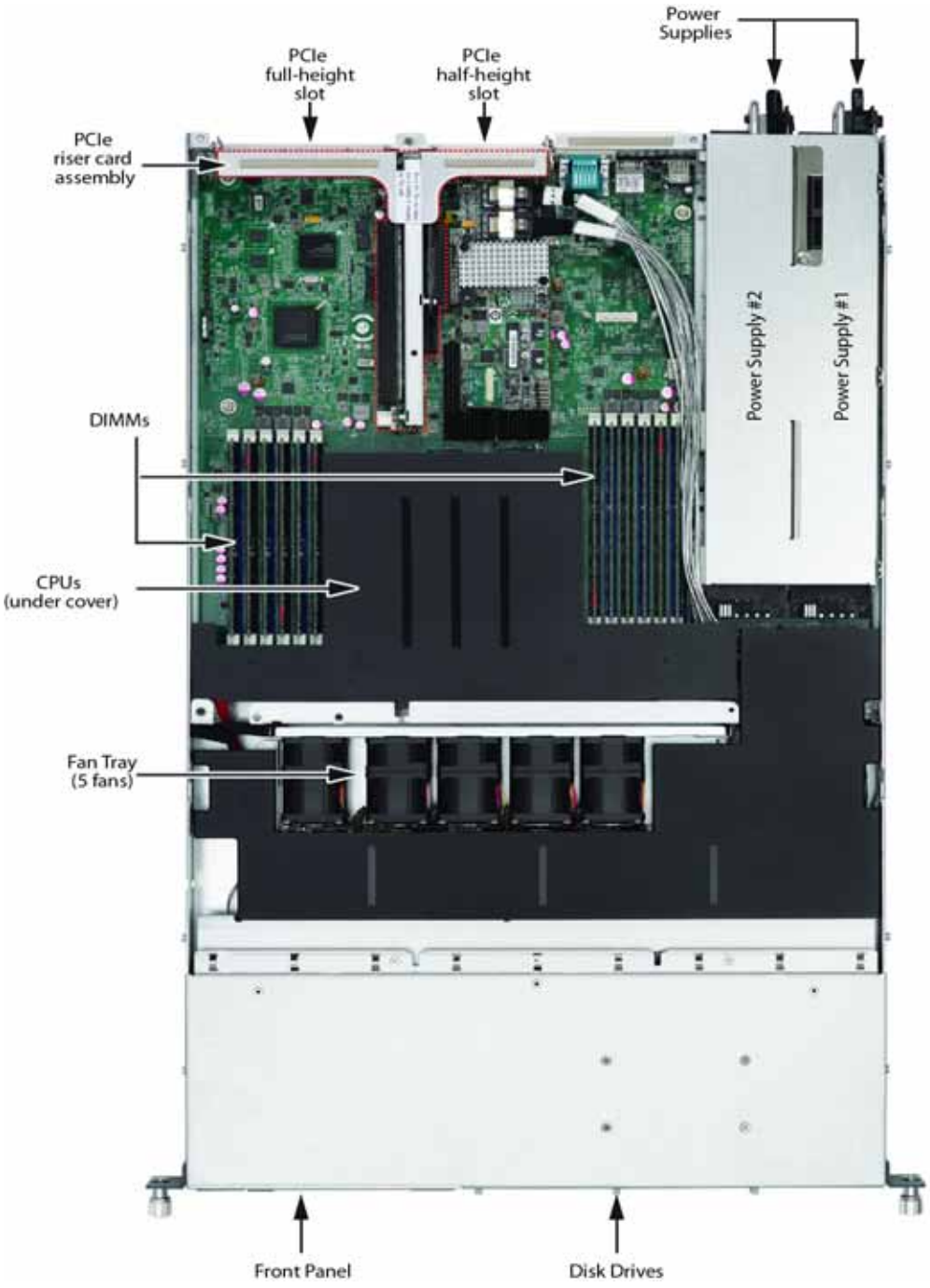

CPUs and DIMMs

Physical Layout

Each CPU has three DIMM channels:

- CPU1 has channels A, B, and C.
- CPU2 has channels D, E, and F.

Each DIMM channel has two banks: Bank 1 and Bank 2. The blue-colored DIMM banks are for Bank 1 and the black-colored are for Bank 2.

As an example, DIMM slots A1, B1, and C1 belong to Bank 1, while A2, B2, and C2 belong to Bank 2.

Figure 8 shows how banks and channels are physically laid out on the motherboard. The DIMM slots on the right (channels A, B, and C) are associated with CPU1, while the DIMM slots on the left (channels D, E, and F) are associated with CPU2. The Bank 1 (blue) DIMM slots are always located farther away from a CPU than the corresponding Bank 2 (black) slots. Bank 1 slots are populated before Bank 2 slots.

Figure 8 CPU DIMM Channels and Banks

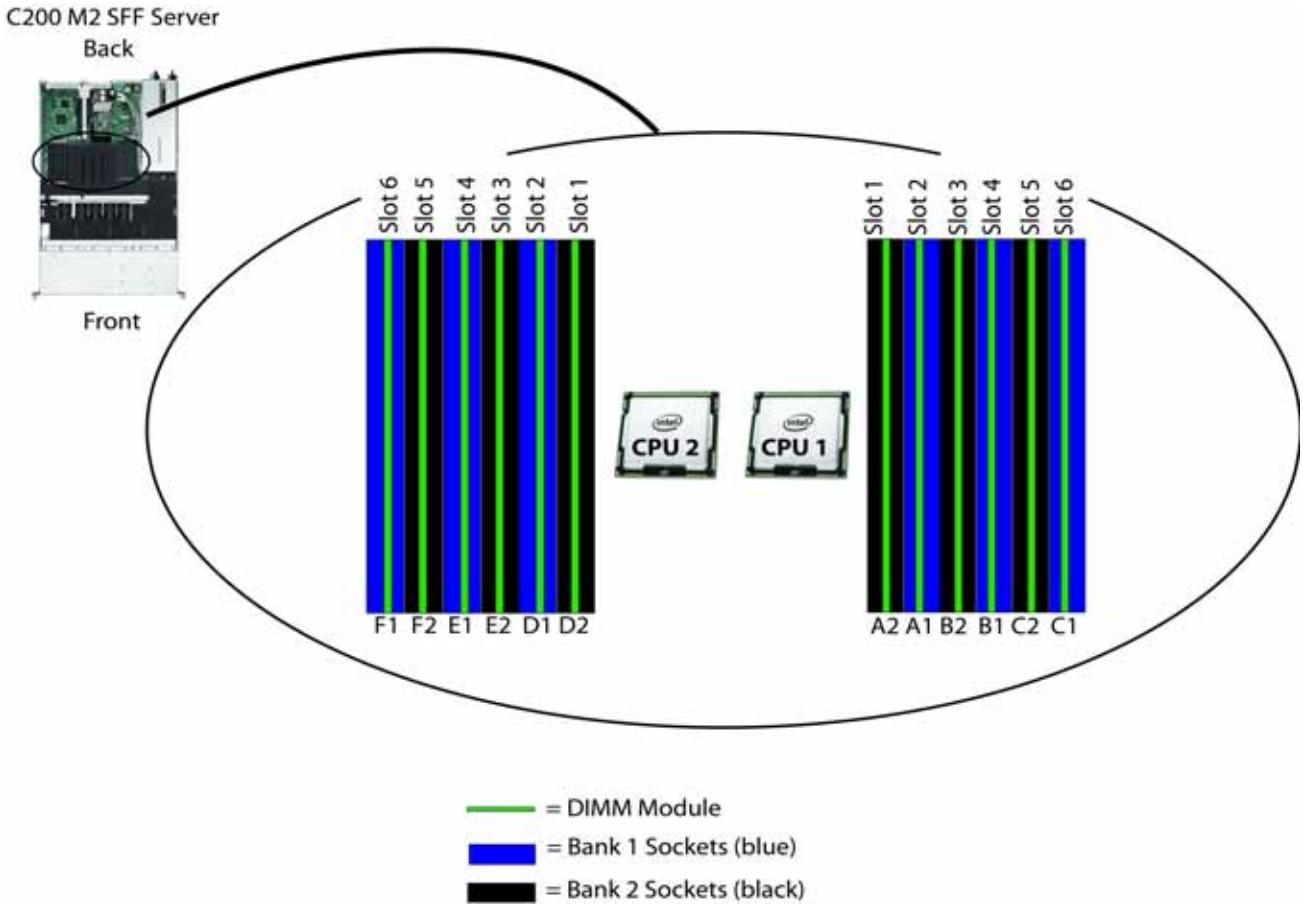

Memory Population Rules

When considering the memory configuration of your server, you should consider the following items:

- DIMMs within the server should all be the same type and speed. If you mix different DIMM types or DIMMs with different clock rates in the same server, such configurations are supported; however, these configurations may cause the system to operate at less than optimum levels. See *Table 24 on page 47* for recommended DIMM combinations.
- DIMMs can be used either in a one DIMM per Channel (1DPC) configuration or in a two DIMMs per Channel (2DPC) configuration.
- There are blue and black DIMM slots. Populate blue slots in a bank first.
- Low-voltage (1.35 V) DIMM and standard-voltage DIMM (1.5 V) can be mixed in the same server. Note that this causes the system BIOS to default to standard-voltage operation (Performance Mode). See *Low-Voltage DIMM Considerations*.

Low-Voltage DIMM Considerations

The C200 M2 server can be ordered with low-voltage (1.35 V) DIMMs or standard-voltage (1.5 V) DIMMs. Note the following considerations:

- Low-voltage DIMMs within the server must have the identical manufacturer, type, speed, and size.
- Low-voltage DIMMs and standard-voltage DIMMs can be mixed in the same server. Note that this causes the system BIOS to default to standard-voltage operation (Performance Mode). That is, the server cannot operate in Power Saving Mode unless all DIMMs are low-voltage DIMMs.
- CPUs that have a maximum memory frequency less than 1333 MHz support low-voltage DIMMs operating in Power Saving Mode only, and do not support Performance Mode.

Recommended Configurations

Table 24 lists the recommended DIMM combinations for 1- and 2-socket CPU systems. The DIMM combinations yielding the best performance are noted.

Table 24 Recommended DIMM Combinations

Total Memory Size	CPU Socket 1		CPU Socket 2		DIMM Max Clock rate	Total DIMMs in System
	DIMM Bank 1	DIMM Bank 2	DIMM Bank 1	DIMM Bank 2		
8 GB (1 CPU) 16 GB (2 CPUs)	1 x 8 GB	—	1 x 8 GB	—	1333 MHz	2
	2 x 4 GB	—	2 x 4 GB	—	1333 MHz	4
12 GB (1 CPU) 24 GB (2 CPUs)	3 x 4 GB	—	3 x 4 GB	—	1333 MHz	6[1]
16 GB (1 CPU) 32 GB (2 CPUs)	1 x 16 GB	—	1 x 16 GB	—	1066 MHz	2
	2 x 8 GB	—	2 x 8 GB	—	1333 MHz	4
	2 x 4 GB	2 x 4 GB	2 x 4 GB	2 x 4 GB	1333 MHz	8
24 GB (1 CPU) 48 GB (2 CPUs)	3 x 8 GB	—	3 x 8 GB	—	1333 MHz	6[1]
	3 x 4 GB	3 x 4 GB	3 x 4 GB	3 x 4 GB	1333 MHz	12[1]
32 GB (1 CPU) 64 GB (2 CPUs)	2 x 16 GB	—	2 x 16 GB	—	1066 MHz	4
	2 x 8 GB	2 x 8 GB	2 x 8 GB	2 x 8 GB	1333 MHz	8
36 GB (1 CPU) 72 GB (2 CPUs)	3 x 8 GB	3 x 4 GB	3 x 8 GB	3 x 4 GB	1333 MHz	12[1]
48 GB (1 CPU) 96 GB (2 CPUs)	3 x 16 GB	—	3 x 16 GB	—	1066 MHz	6
	3 x 8 GB	3 x 8 GB	3 x 8 GB	3 x 8 GB	1333 MHz	12[1]
60 GB (1 CPU) 120 GB (2 CPUs)	3 x 16 GB	3 x 4 GB	3 x 16 GB	3 x 4 GB	800 MHz	12
64 GB (1 CPU) 128 GB (2 CPUs)	2 x 16 GB	2 x 16 GB	2 x 16 GB	2 x 16 GB	800 MHz	8
72 GB (1 CPU) 144 GB (2 CPUs)	3 x 16 GB	3 x 8 GB	3 x 16 GB	3 x 8 GB	800 MHz	12
96 GB (1 CPU) 192 GB (2 CPUs)	3 x 16 GB	3 x 16 GB	3 x 16 GB	3 x 16 GB	800 MHz	12

Notes . . .

1. Best performance configuration

Configuration Samples

Figure 9 and *Figure 10 on page 49* show examples of how DIMMs are populated for 1-CPU and 2-CPU systems.

Figure 9 Example of 24-GB DIMM Memory Combinations with One CPU

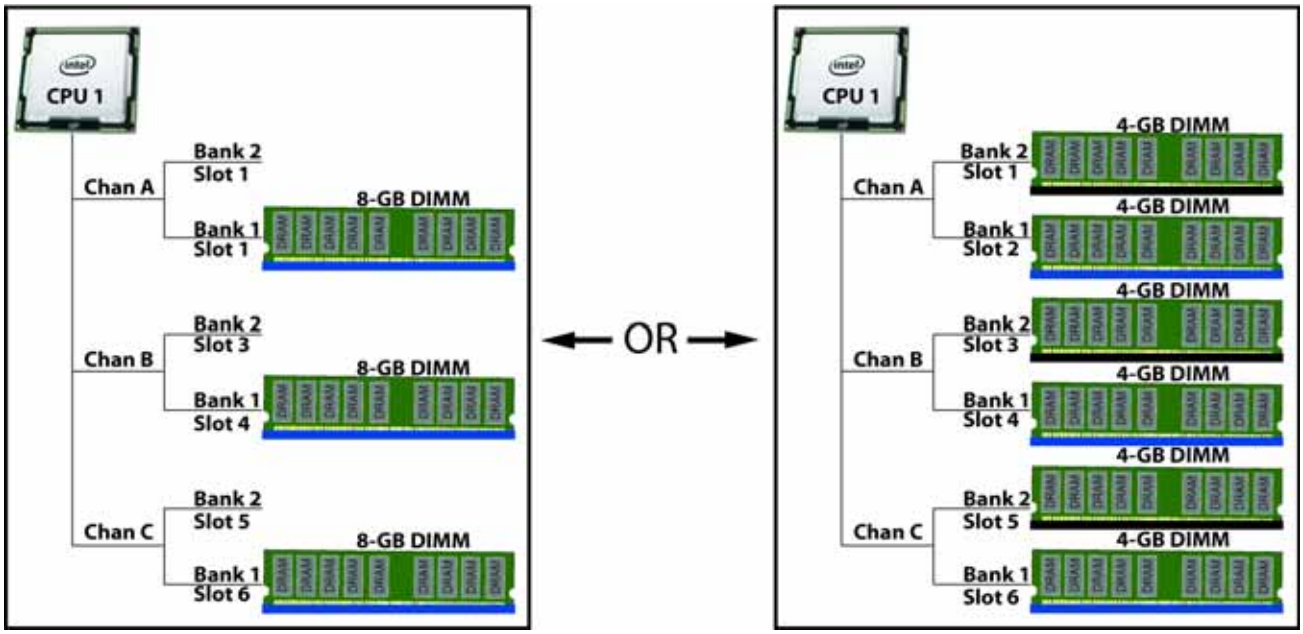

Figure 10 Example of 96-GB DIMM Memory Combinations with Two CPUs

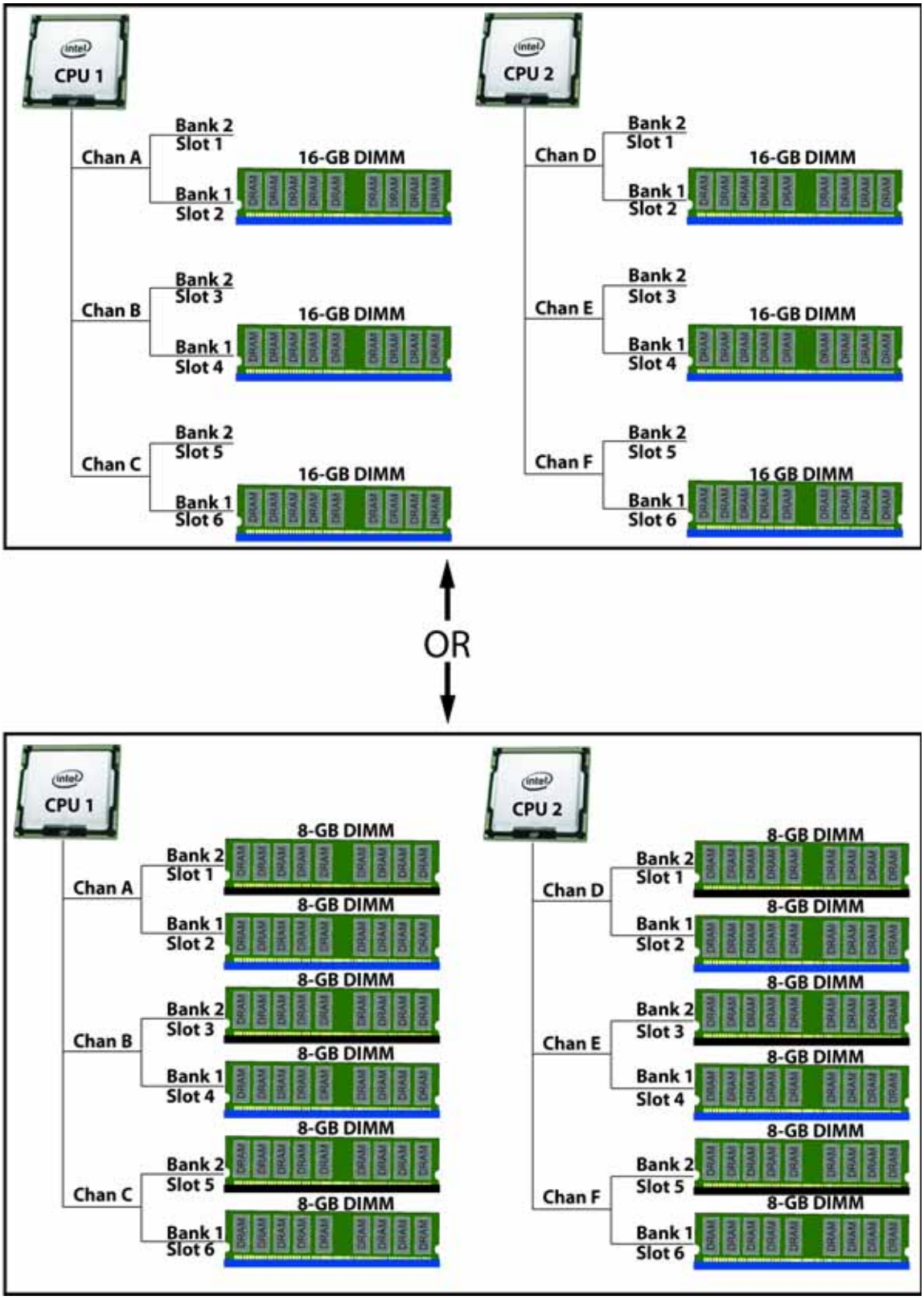

RACKS

The Cisco R42610 rack (see *Figure 11*) is certified for Cisco UCS installation at customer sites and is suitable for the following equipment:

- Cisco UCS B-Series servers and fabric interconnects
- Cisco UCS C-Series and select Nexus switches

The rack is compatible with hardware designed for EIA-standard 19-inch racks. Rack specifications are listed in *Table 25*.s

Table 25 Cisco R42610 Rack Specifications

Parameter	Standard Rack	Expansion Rack
Dimensions (H x W x D)	78.74 x 24 x 43.38 in. (2000 x 610 x 1102 mm)	78.74 x 23.58 x 43.38 in. (2000 x 599 x 1102 mm)
Dimensions (H x W x D) with packaging	89 x 33 x 47 in. (2261 x 838 x 1194 mm)	89 x 33 x 47 in. (2261 x 838 x 1194 mm)
Distance from front mounting rail to rear mounting rail	29.2 in (741 mm)	29.2 in (741 mm)
Weight	299.83 lb (136 kg)	231. 49 lb (105 kg)
Weight with packaging	354 lb (161 kg)	284 lb (129 kg)
Side panels included	Yes	No
Equipment mounting capacity	42RU	42RU
Static load capacity	2100 lb (954 kg)	2100 lb (954 kg)
Dynamic load capacity	Not applicable	Not applicable

NOTE: The AC input connector is an IEC 320 C-14 15 A/250 VAC power inlet.

Figure 11 Cisco R42610 Rack

Front view - door closed | Front view - door open | Front view - door removed

PDUs

Cisco RP Series Power Distribution Units (PDUs) offer power distribution with branch circuit protection.

Cisco RP Series PDU models distribute power to up to 24 outlets. The architecture organizes power distribution, simplifies cable management, and enables you to move, add, and change rack equipment without an electrician.

With a Cisco RP Series PDU in the rack, you can replace up to two dozen input power cords with just one. The fixed input cord connects to the power source from overhead or under-floor distribution. Your IT equipment is then powered by PDU outlets in the rack using short, easy-to-manage power cords.

The C-series severs accept the zero-rack-unit (0RU) PDU. See *Figure 12*).

Figure 12 Zero Rack Unit PDU (PID = RP208-30-2P-U-2)

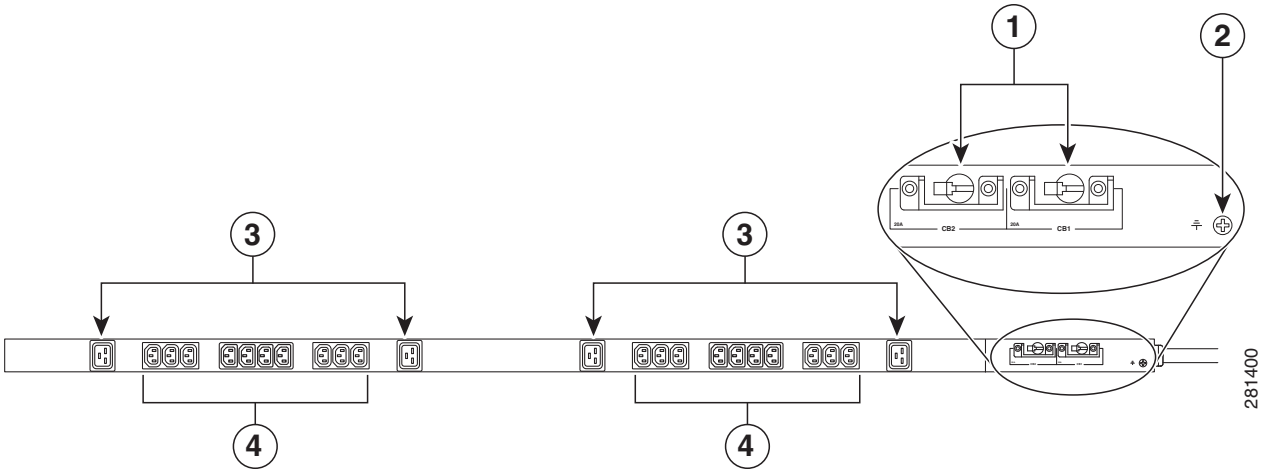

1	Breakers	**3**	C19 plugs
2	Ground connection	**4**	C13 plugs

Cisco RP Series PDU models provide two 20-ampere (A) circuit breakers for groups of receptacles. The effects of a tripped circuit are limited to a receptacle group. Simply press a button to reset that circuit.

POWER SUPPLIES

The C200 M2 can accommodate one or two 650 W power supplies. A typical power supply is shown in *Figure 13*.

Figure 13 C200 M2 Power Supply

KVM CABLE

The KVM cable provides a connection into the server, providing a DB9 serial connector, a VGA connector for a monitor, and dual USB ports for a keyboard and mouse. With this cable, you can create a direct connection to the operating system and the BIOS running on the server.

The KVM cable ordering information is listed in *Table 26*.

Table 26 KVM Cable

Product ID (PID)	PID Description
37-1016-01	KVM Cable

Figure 14 KVM Cable

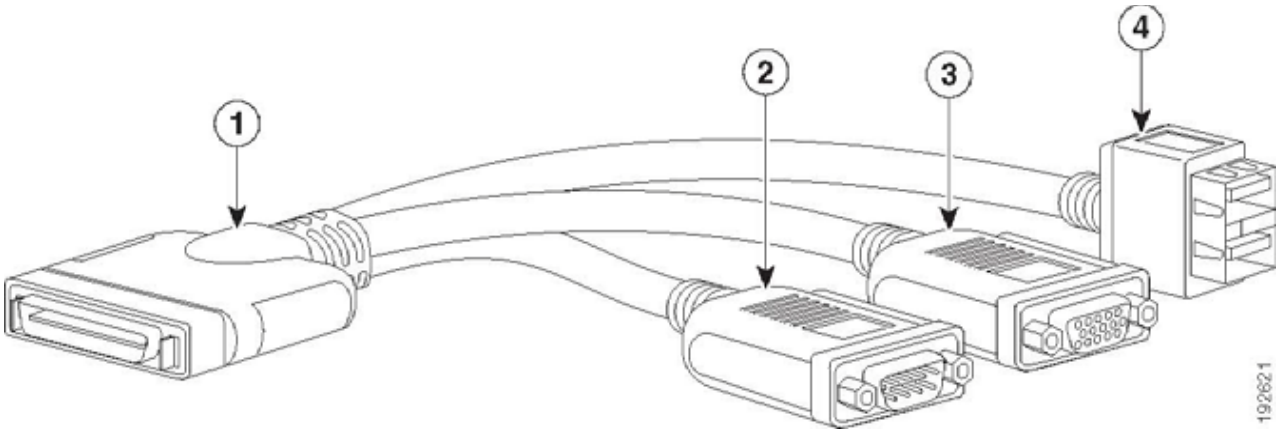

1	Connector (to server front panel)	**3**	VGA connector (for a monitor)
2	DB-9 serial connector	**4**	Two-port USB connector (for a mouse and keyboard)

Motherboard USB Port

The C200 M2 SFF motherboard has a general-purpose USB socket, as shown in *Figure 15*. Cisco offers a 4 GB USB drive that is compatible with this socket. You can order it as a spare (PID = UCS-USBFLSH-S-4GB=).

Figure 15 Motherboard USB Port

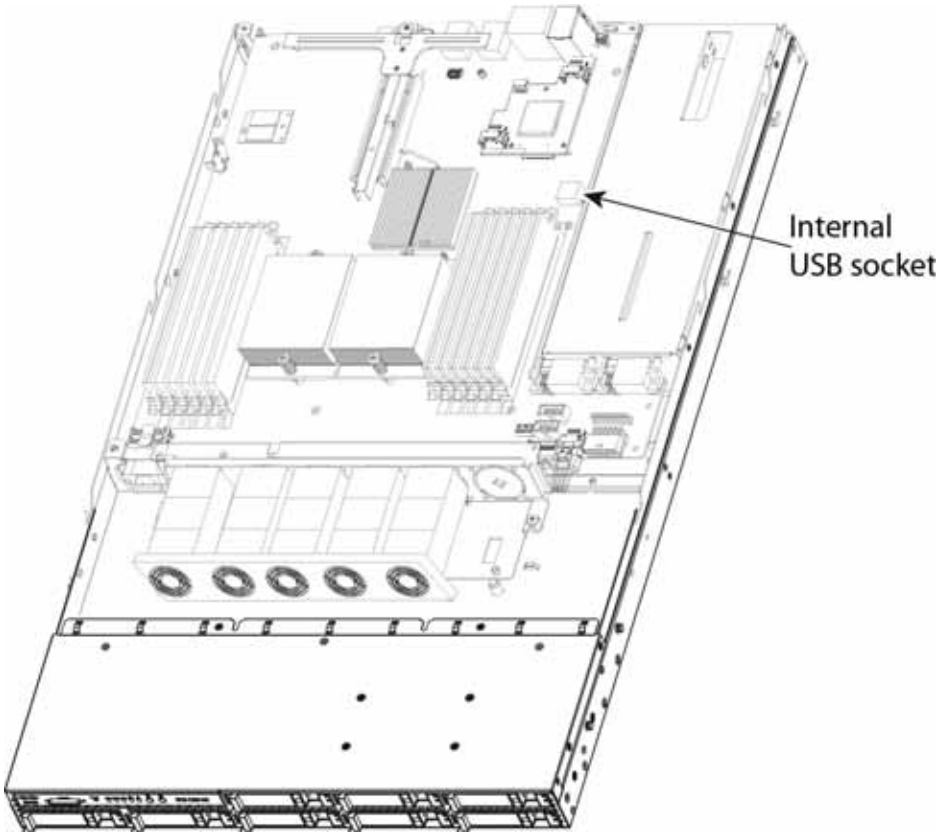

TECHNICAL SPECIFICATIONS

Dimensions and Weight

Table 27 UCS C200 M2 Dimensions and Weight[1]

Parameter	Value
Height	1.7 in. (4.32 cm)
Width	16.92 in.(43.0 cm)
Depth	27.8 in. (70.60 cm)
Front Clearance	3 in. (76 mm)
Side Clearance	1 in. (25 mm)
Rear Clearance	6 in. (152 mm)
Weight	33.00 lbs (14.97 kg)*

Notes . . .

1. The system weight given here is an estimate for a fully configured system and will vary depending on the number of peripheral devices and power supplies.

Power Specifications

The general power specifications for the C200 M2 SFF server are listed in *Table 28*.

Table 28 UCS C200 M2 SFF Power Specifications

Description	Specification
AC input voltage	100 to 127 VAC nominal (Range: 90 to 264 VAC)
AC input frequency	50 to 60 Hz nominal (Range: 47 to 63 Hz)
Maximum AC input current	8 A at 100 VAC
Maximum AC inrush current	30 A peak sub-cycle duration
Maximum output power for each power supply	650 W
Power supply output voltage	Main power: 12 VDC Standby Power: 5 VDC
Power supply efficiency	92% Peak, complies with 80Plus Gold Standard

NOTE: AC input connector is an IEC 320 C-14 15A/250VAC power inlet.

For configuration-specific power specifications, use the Cisco UCS Power Calculator at this URL:

http://ucspowercalc.cisco.com

As an example, using the calculator, we can determine the approximate power for the following C200 M2 SFF server configuration:

- Voltage = 115 VAC
- Power Supplies = 2
- Processors = 2 CPUs (Intel Xeon 2.93 GHz X5670)
- Memory DIMMs = 12 x 8 GB
- Disk Drives = 4 x 1 TB
- PCIe Cards = 2
- PCIe RAID Card = 0

The resulting power calculations are:

- Idle Power = 219 W
- 50% Load Power = 364 W
- Max Power = 506 W

Environmental Specifications

The power specifications for the C200 M2 server are listed in *Table 29*.

Table 29 UCS C200 M2 Environmental Specifications

Parameter	Minimum
Temperature operating	10°C to 35°C (50°F to 95°F)
Temperature nonoperating	-40°C to 65°C (-40°F to 149°F)
Altitude operating	0 to 3,000 m (0 to 10,000 ft.); maximum ambient temperature decreases by 1° per 300 m
Humidity nonoperating	5 to 93%, noncondensing
Vibration nonoperating	2.2 Grms, 10 minutes per axis on each of the three axes
Shock operating	Half-sine 2 G, 11 ms pulse, 100 pulses in each direction, on each of the three axes
Shock nonoperating	Trapezoidal, 25 G, two drops on each of six faces Velocity = 175 inches per second on bottom face drop Velocity = 90 inches per second on the other five faces
Electrostatic discharge	Tested to ESD levels up to 15 kilovolts (kV) air discharge and up to 8 kV contact discharge without physical damage
Acoustic	Sound power: 54.7 dBA (5.7 Bels) at ambient temperature 23°C measured using the Dome Method GOST MsanPiN 001-96

Compliance Requirements

The regulatory compliance requirements for C-Series servers are listed in *Table 30*.

Table 30 UCS C-Series Regulatory Compliance Requirements

Parameter	Description
Regulatory Compliance	Products should comply with CE Markings per directives 2004/108/EC and 2006/95/EC
Safety	UL 60950-1 Second Edition CAN/CSA-C22.2 No. 60950-1 Second Edition EN 60950-1 Second Edition IEC 60950-1 Second Edition AS/NZS 60950-1 GB4943 2001
EMC - Emissions	47CFR Part 15 (CFR 47) Class A AS/NZS CISPR22 Class A CISPR22 Class A EN55022 Class A ICES003 Class A VCCI Class A EN61000-3-2 EN61000-3-3 KN22 Class A CNS13438 Class A
EMC - Immunity	EN55024 CISPR24 EN300386 KN24

Americas Headquarters
Cisco Systems, Inc.
San Jose, CA

Asia Pacific Headquarters
Cisco Systems (USA) Pte. Ltd.
Singapore

Europe Headquarters
Cisco Systems International BV Amsterdam,
The Netherlands

Cisco has more than 200 offices worldwide. Addresses, phone numbers, and fax numbers are listed on the Cisco Website at **www.cisco.com/go/offices.**

Cisco and the Cisco Logo are trademarks of Cisco Systems, Inc. and/or its affiliates in the U.S. and other countries. A listing of Cisco's trademarks can be found at www.cisco.com/go/trademarks. Third party trademarks mentioned are the property of their respective owners. The use of the word partner does not imply a partnership relationship between Cisco and any other company. (1005R)