Cisco Aironet 2.4 GHz 13-dBi Directional Antenna (AIR-ANT2413P2M-N)

This chapter contains the following:

- Overview, on page 1
- Technical Specifications, on page 2
- System Requirements, on page 3
- General Safety Precautions, on page 3
- General Installation Guidelines and Tips for Optimal Performance, on page 5
- Installing the Antenna, on page 7
- Communications, Services, and Additional Information, on page 19

Overview

This document outlines the specifications for the Cisco Aironet AIR-ANT2413P2M-N 2.4 GHz 13-dBi 2-Port Directional antenna with N-type connectors and provides instructions for mounting it. The antenna operates in the 2.4 GHz frequency band and is designed for use in outdoor environments.

Figure 1: AIR-ANT2413P2M-N

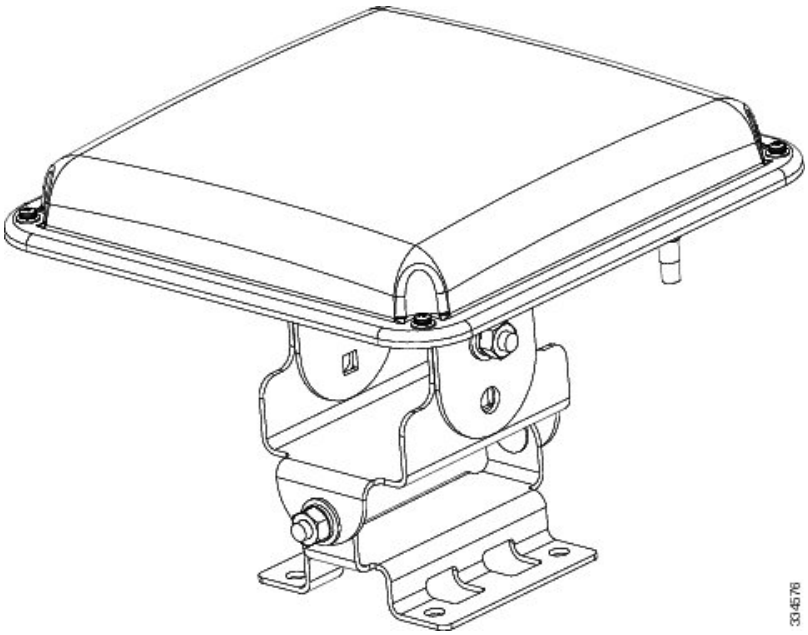

Technical Specifications

Antenna type	**2-Element Patch Array**
Operating frequency range	2400 to 2500 MHz
Nominal input impedance	50 Ohms
Peak gain	13 dBi
Polarization	Linear, Dual
Elevation plane 3-dB beamwidth	30°
Azimuth plane 3-dB beamwidth	30°
Sidelobe level	< –20 dBc
Front-to-back ratio	> 25 dB
Cable length and type	30 in. (76.2 cm)outdoor rated Coax
Connector type	N Male
Length	7.8 in. (19.8 cm)
Width	7.8 in. (19.8 cm)
Height	1.2 in. (3 cm)

Antenna type	2-Element Patch Array
Weight	21.6 oz. (0.61 kg)
Operating temperature range	–40°F to 131°F (–40°C to 55°C)

Elevation and Azimuth Plane Patterns

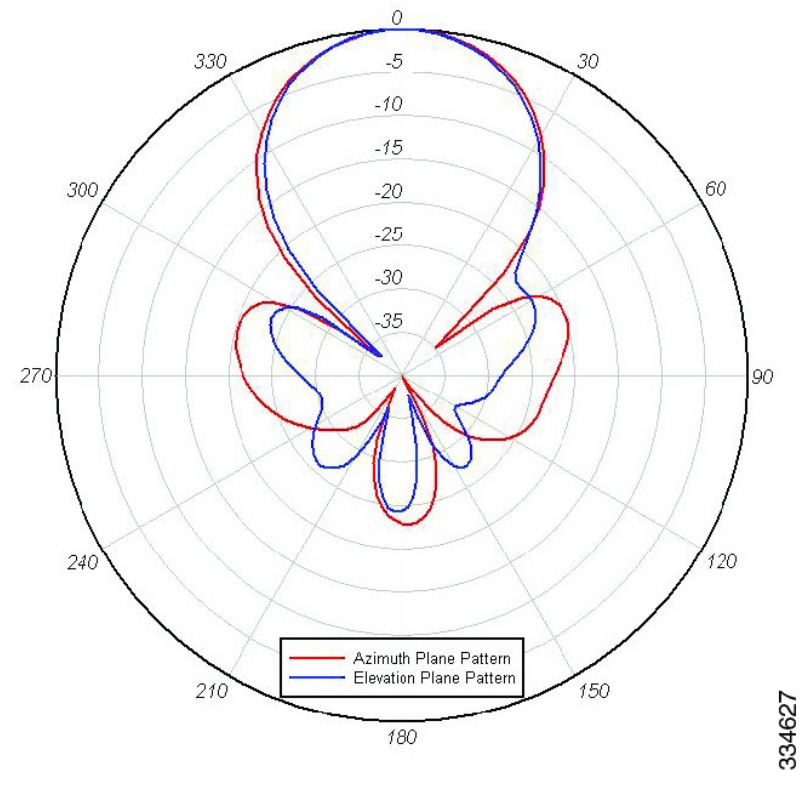

System Requirements

This antenna is designed for use with Cisco Aironet access points and bridges but can be used with any 2.4-GHz Cisco Aironet radio device that uses an N-male connector.

General Safety Precautions

Warning This warning symbol means danger. You are in a situation that could cause bodily injury. Before you work on any equipment, be aware of the hazards involved with electrical circuitry and be familiar with standard practices for preventing accidents. Use the statement number provided at the end of each warning to locate its translation in the translated safety warnings that accompanied this device. **Statement 1071**

Warning Do not work on the system or connect or disconnect cables during periods of lightning activity. **Statement 1001**

Warning Do not locate the outdoor antenna near overhead power lines or other electric light or power circuits, or where it can come into contact with such circuits. When installing the antenna, take extreme care not to come into contact with such circuits, as they may cause serious injury or death. For proper installation and grounding of the antenna, please refer to national and local codes (for example, U.S.:NFPA 70, National Electrical Code, Article 810, Canada:Canadian Electrical Code, Section 54). **Statement 1052**

Warning In order to comply with FCC radio frequency (RF) exposure limits, antennas should be located at a minimum of 7.9 inches (20 cm) or more from the body of all persons. **Statement 332**

Each year hundreds of people are killed or injured when attempting to install an antenna. In many of these cases, the victim was aware of the danger of electrocution, but did not take adequate steps to avoid the hazard.

Warning For your safety, and to help you achieve a good installation, please read and follow these safety precautions. **They may save your life!**

For your safety, read and follow these safety precautions.

- If you are installing an antenna for the first time, for your own safety as well as others, seek professional assistance. Your Cisco sales representative can explain which mounting method to use for the size and type antenna you are about to install.
- Before you install an antenna, contact your Cisco account representative to explain which mounting method to use for the size and type of antenna that you are about to install.
- Find someone to help you—installing an antenna is often a two-person job.
- Select your installation site with safety, as well as performance, in mind. Remember that electric power lines and phone lines look alike. For your safety, assume that any overhead line can kill you.
- Contact your electric power company. Tell them your plans and ask them to come look at your proposed installation.
- Plan your installation carefully and completely before you begin. Each person involved in an installation should be assigned to a specific task, and should know what to do and when to do it. One person should be in charge of the operation to issue instructions and watch for signs of trouble.
- When installing your antenna, follow these guidelines:
  - Do not use a metal ladder.
  - Do not work on a wet or windy day.
  - Do dress properly—wear shoes with rubber soles and heels, rubber gloves, and a long-sleeved shirt or jacket.
- If the assembly starts to drop, move away from it and let it fall. Because the antenna, mast, cable, and metal guy wires are all excellent conductors of electrical current, even the slightest touch of any of these parts to a power line completes an electrical path through the antenna and the installer.

- If any part of the antenna system should come in contact with a power line, do not touch it or try to remove it yourself. Call your local power company to have it removed safely.
- If an accident should occur with the power lines, call for qualified emergency help immediately.

General Installation Guidelines and Tips for Optimal Performance

This section contains the following:

Installation Guidelines

Caution For outside installations, make sure you do not mount the antenna upside down or block the bottom of the antenna at the cable exit. The correct mounting position is with the cable pointing down (towards the ground) so that any moisture will drain through the antenna drain holes. The antenna ships with a yellow mounting instruction label temporarily attached to the antenna radome.

The following instructions are common to most mast mounted installations. For specific installation instructions for each antenna, see the antenna data-sheet and the router hardware installation guide.

- Assemble your new antenna on the ground or a level surface at the installation site.
- Connect its coaxial cable while you are on the ground and attach the antenna to the mast.
- Ensure that the mast does not fall as you raise or remove it. Use a durable non-conductive rope secured at each two foot level as the mast is raised. Have an assistant tend the rope, ready to pull the mast clear of any hazards (such as power lines) should it begin to fall.
- Use the mounting bracket provided with the antenna.
- If the installation will use guy wires:
  - Install guy anchor bolts.
  - Estimate the length of guy wire and cut it before raising the mast.
  - Attach guy wires to a mast using guy rings.
- Carefully connect the antenna and mast assembly to its mounting bracket and tighten the clamp bolts.
  - In the case of a a guyed (tall, thin mast) installation, you must have at least one assistant to hold the mast upright while the guy wires are attached and tightened to the anchor bolts.
- Attach a “DANGER” label at eye level on the mast.
- Install ground rods to remove any static electricity buildup and connect a ground wire to the mast and ground rod. Use ground rods designed for that purpose, not a spare piece of pipe.

Unused Antenna Ports

Port plugs must be installed in any unused antenna ports.

The weatherproof caps on the connectors protect the router interior from environmental elements including water, heat, cold, and dust. They are installed on unused ports before the router is shipped.

When you install a new antenna in a port with an N-connector:

- Chassis-mounted antennas—Remove the weather proof cap before installing a chassis-mounted antenna.
- External antennas—Remove weatherproof cap, then connect the supported Cisco cable to the connector.

Tips for Optimal Performance

Because the antenna transmits and receives radio signals, they are susceptible to RF obstructions and common sources of interference that can reduce throughput and range of the device to which they are connected. Follow these guidelines to ensure the best possible performance:

- Mount the antenna to utilize its propagation characteristics. One way to do this is to orient the antenna vertically and mount it as high as possible.
- Keep the antenna away from metal obstructions such as heating and air-conditioning ducts, large ceiling trusses, building superstructures, and major power cabling runs. If necessary, use a rigid conduit to lower the antenna away from these obstructions.
- The density of the materials used in the building construction determines the number of walls the signal must pass through and still maintain adequate coverage. Consider the following before choosing the location to install your antenna:
  - Paper and vinyl walls have very little affect on signal penetration.
  - Solid and pre-cast concrete walls limit signal penetration to one or two walls without degrading coverage.
  - Concrete and wood block walls limit signal penetration to three or four walls.
  - A signal can penetrate five or six walls constructed of drywall or wood.
  - A thick metal wall causes signals to reflect off, causing poor penetration.
  - A chain link fence or wire mesh spaced between 1 and 1 1/2 in. (2.5 and 3.8 cm) acts as a harmonic reflector that blocks a 2.4-GHz radio signal.
- Install the antenna away from microwave ovens and 2-GHz cordless phones. These products can cause signal interference because they operate in the same frequency range as the device your antenna is connected to.
- Install the antenna in a vertical orientation to maximize signal propagation.

Site Selection

Before attempting to install your antenna, determine where you can best place the antenna for safety and performance.

Follow these steps to determine a safe distance from wires, power lines, and trees.

1. Measure the height of your antenna.
2. Add this length to the length of the structure on which you are mounting the antenna and then double this total for the minimum recommended safe distance.

Caution **If you are unable to maintain this safe distance, stop and get professional help.**

Generally, the higher an antenna is above the ground, the better it performs. Good practice is to install your antenna about 5 to 10 foot (1.5 to 3 m) above the roof line and away from all power lines and obstructions. If possible, find a mounting place directly above your wireless device so that the lead-in cable can be as short as possible.

Installing the Antenna

You can install the antenna on a pole from 1.63” to 2.3” pipe O.D. The mounting options allow the antenna to be vertically or horizontally polarized.

Tools and Equipment Required

An installation kit is shipped with the antenna and consists of the panel antenna with adjustable mount and hardware, including:

- Antenna mount bracket
- Elevation adjustable bracket
- Azimuth adjustable bracket
- Four 1/4-in. 20x3/4 carriage bolts
- Six 1/4-in. 20 hex nuts
- Six 1/4-in. 20 spring lock washers
- Six 1/4-in. 20 flat washers
- Two pipe clamps

To attach the mount to the antenna and secure it to the pole, you need the following tools and equipment, which are not provided.

- 7/16-in wrench
- 5/16-in nut driver or flat head screwdriver for pipe clamps

The following sections contain typical procedures for installing the antenna on a pole. Your installation may vary.

Mounting on a Pole

Follow these steps to mount your antenna on a pole.

Step 1 Remove antenna and mount kit from packaging.

Step 2 Attach antenna mount bracket to the back of the antenna as shown applying a maximum nut-tightening torque of 55 in-lbf (6.2 Nm).

Figure 2: Attaching Antenna Mount Bracket

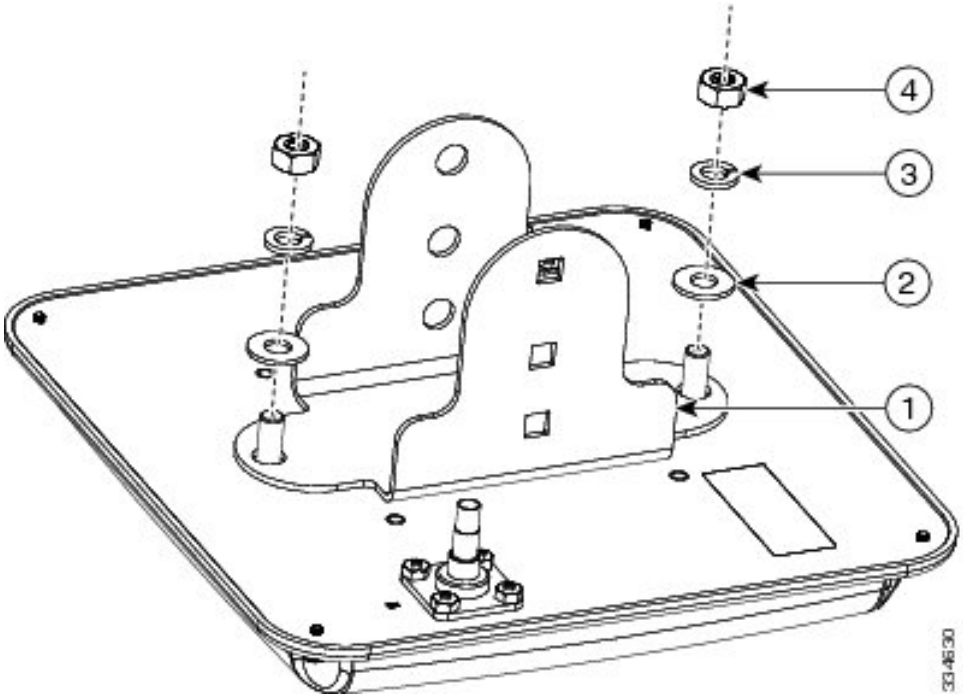

Item	Description
1	Antenna mount bracket
2	1/4-in. flat washer
3	1/4-in. spring lock washer
4	1/4-in. 20 hex nut

Step 3 Attach elevation adjustable bracket as shown and loosely secure hardware. The carriage bolt square holes must be on the inside.

Figure 3: Attaching Elevation Adjustable Bracket

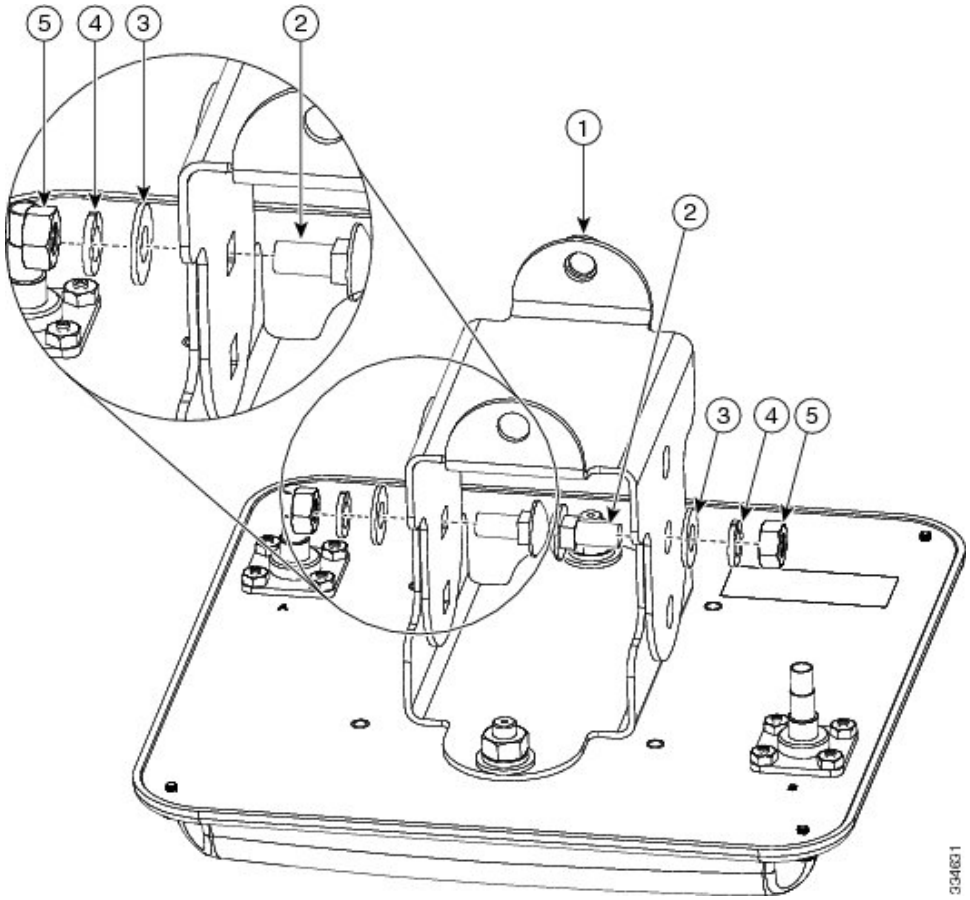

Item	Description
1	Elevation adjustable bracket
2	1/4-in. 20x3/4 carriage bolt
3	1/4-in. flat washer
4	1/4-in. spring lock washer
5	1/4-in. 20 hex nut

Step 4 Attach azimuth adjustable bracket to pipe routing band clamps as shown. Tighten the pipe clamps to a torque of 43-51 in-lbf (4.9-5.8 Nm).

Figure 4: Attaching Azimuth Adjustable Bracket

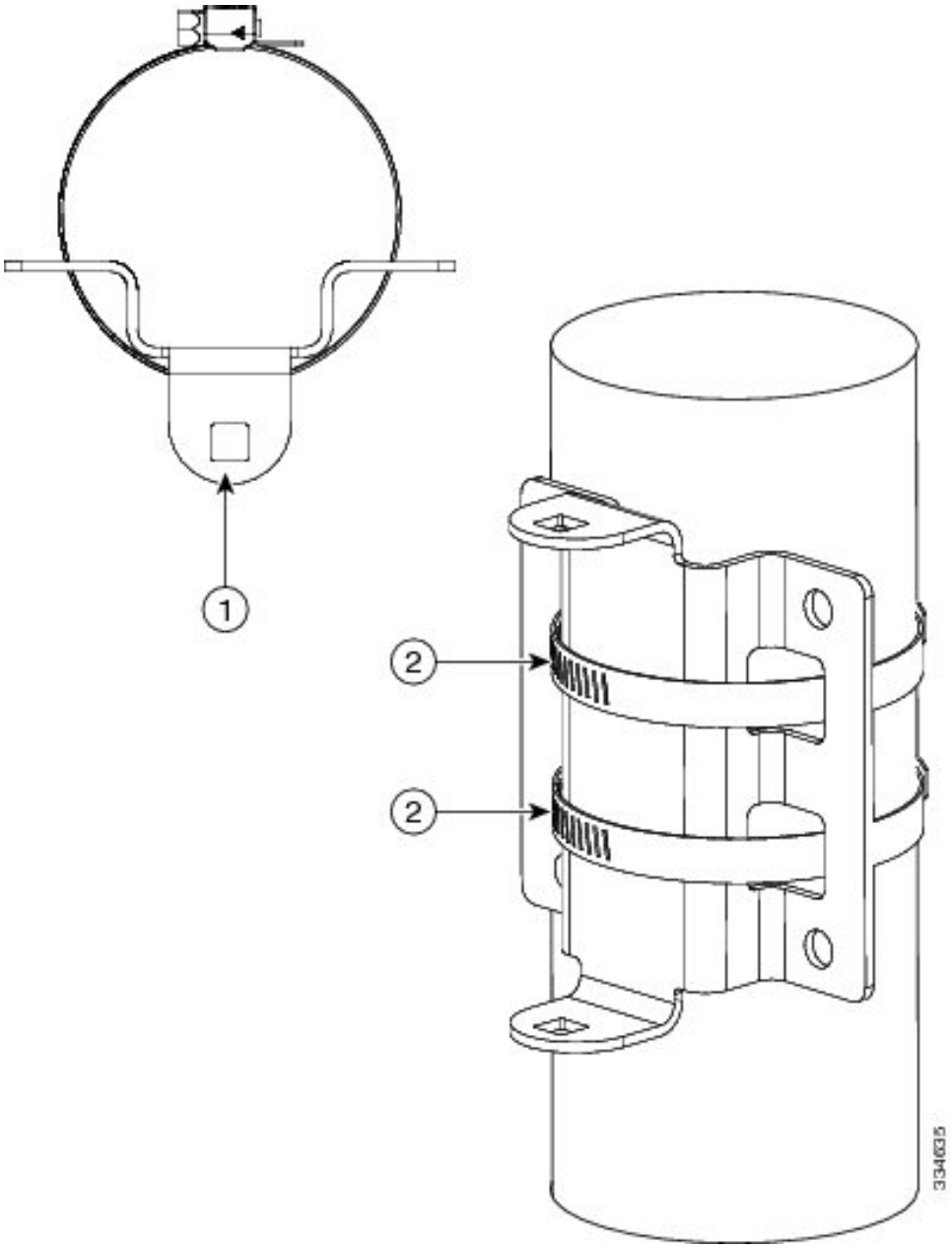

Item	Description
1	Azimuth adjustable bracket
2	Pipe clamps

Step 5 Attach antenna assembly to azimuth bracket on pipe.

Figure 5: Attaching Antenna Assembly

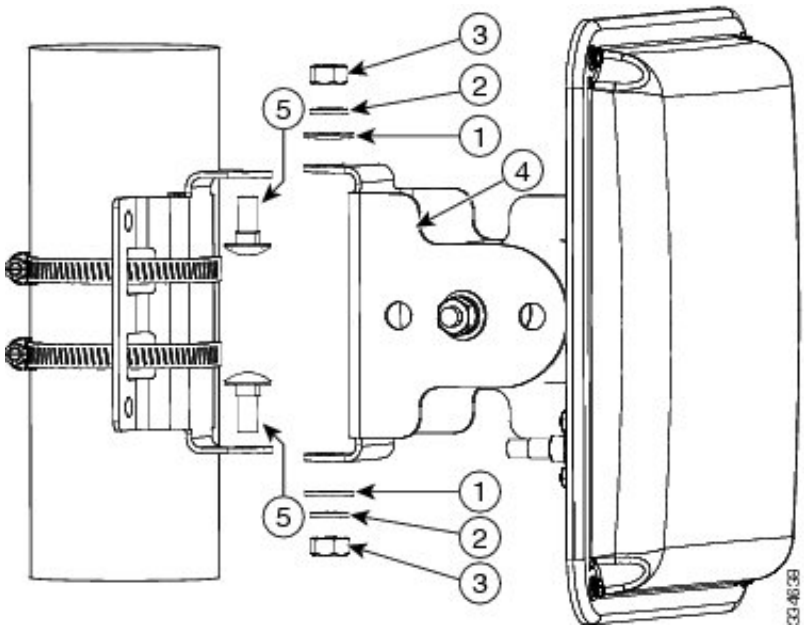

Item	Description
1	1/4-in. flat washer
2	1/4-in. spring lock washer
3	1/4-in. 20 hex nut
4	Elevation adjustable bracket
5	1/4-in. 20x3/4 carriage bolt

Step 6 Adjust the position of the antenna to the desired azimuth and elevation angles and tighten all pivot hardware (4 places) to a maximum torque of 55 in-lbf (6.2 Nm). The bracket allows the antenna position to be adjustable to +/–45 degrees azimuth and +/–60 degrees elevation.

Figure 6: Adjusting Antenna Position

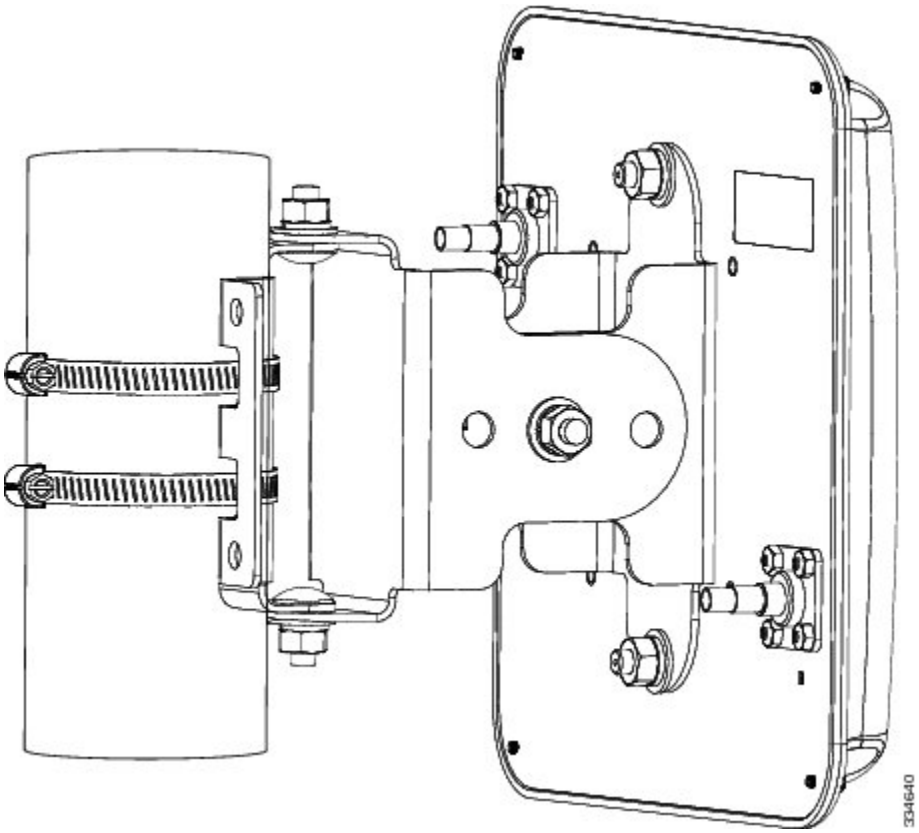

Note Cisco recommends grounding the antenna. Refer to that section within this chapter.

Installing the Optional Mounting Bracket Kit

Using an optional antenna mounting bracket kit, the AIR-ANT2413P2M-N antenna can be mounted directly on an access point in a strand mount or pole mount environment. The antenna bracket kit contains four bracket sections and fasteners that you can assemble in multiple configurations to position and aim the directional antenna in a range of positions. For more information on mounting the antenna with the optional mounting bracket, refer to *Installing Antenna Brackets on Cisco 1550 Series Outdoor Mesh Access Points.*

Mounting on a Vertical Surface

Follow these steps to mount your antenna on a vertical surface.

Step 1 Remove antenna and mount kit from packaging.

Step 2 Attach antenna mount bracket to the back of the antenna as shown below, applying a maximum nut-tightening torque of 55 in-lbf (6.2 Nm).

Figure 7: Attaching Antenna Mount Bracket

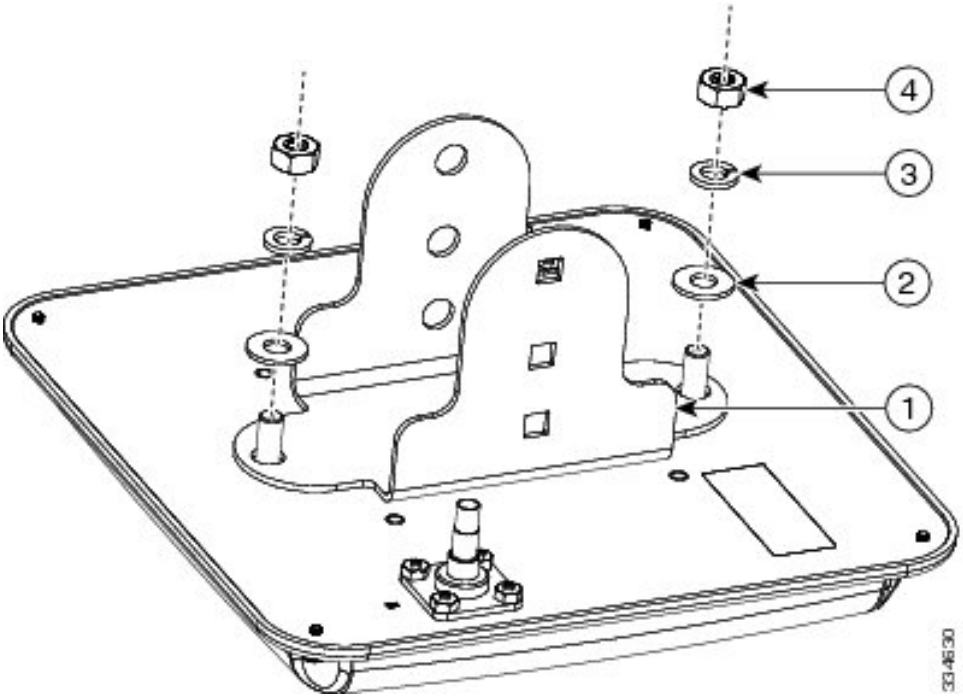

1	Antenna mount bracket
2	1/4-in. flat washer
3	1/4-in. spring lock washer
4	1/4-in. 20 hex nut

Step 3 Attach elevation adjustable bracket as shown and loosely secure hardware. The carriage bolt square holes must be on the inside.

Figure 8: Attaching Elevation Adjustable Bracket

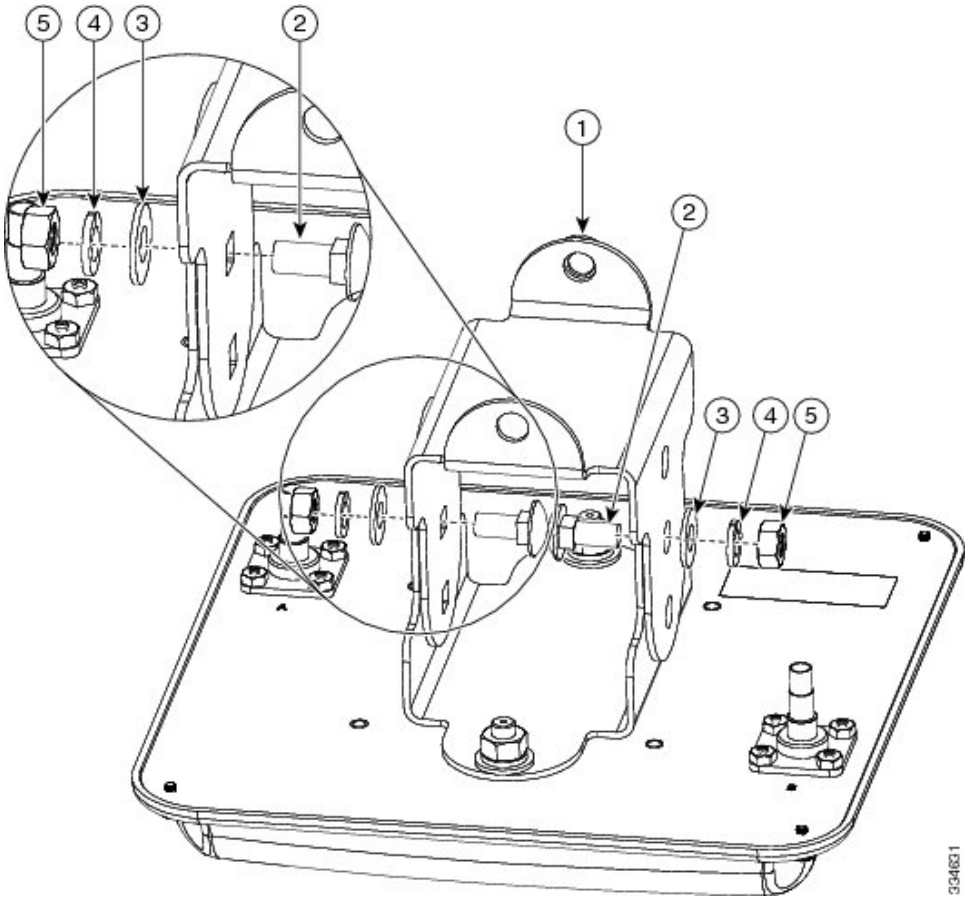

1	Elevation adjustable bracket
2	1/4-in. 20x3/4 carriage bolt
3	1/4-in. flat washer
4	1/4-in. spring lock washer
5	1/4-in. 20 hex nut

Step 4 Using the appropriate customer-supplied anchors and screws, attach the azimuth adjustable bracket to the wall as shown:

Figure 9: Wall Mounting

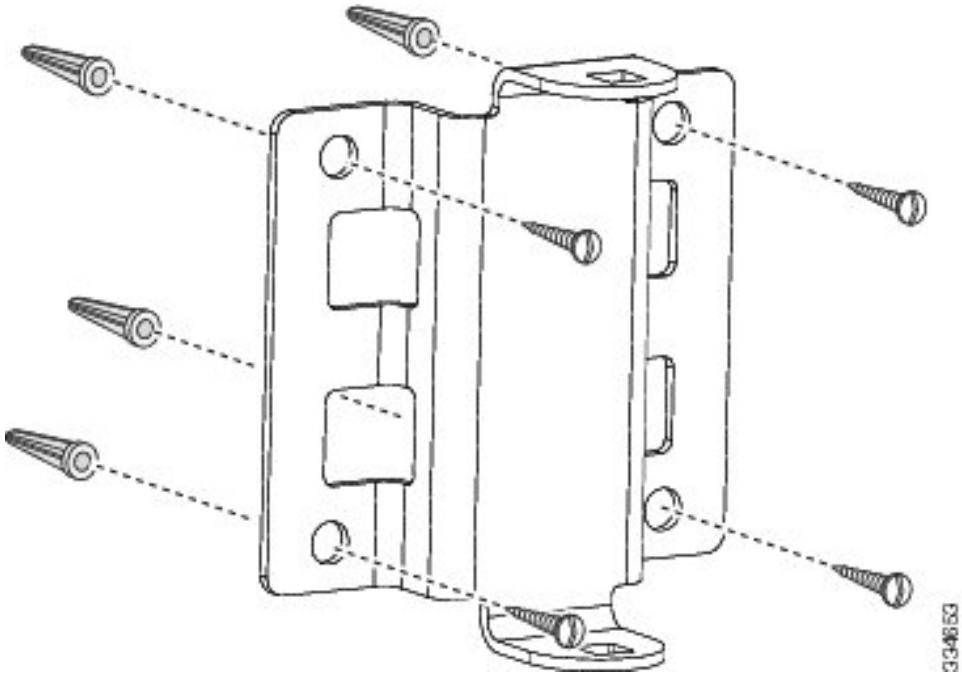

Figure 10: Distance Between Bracket Mounting Holes

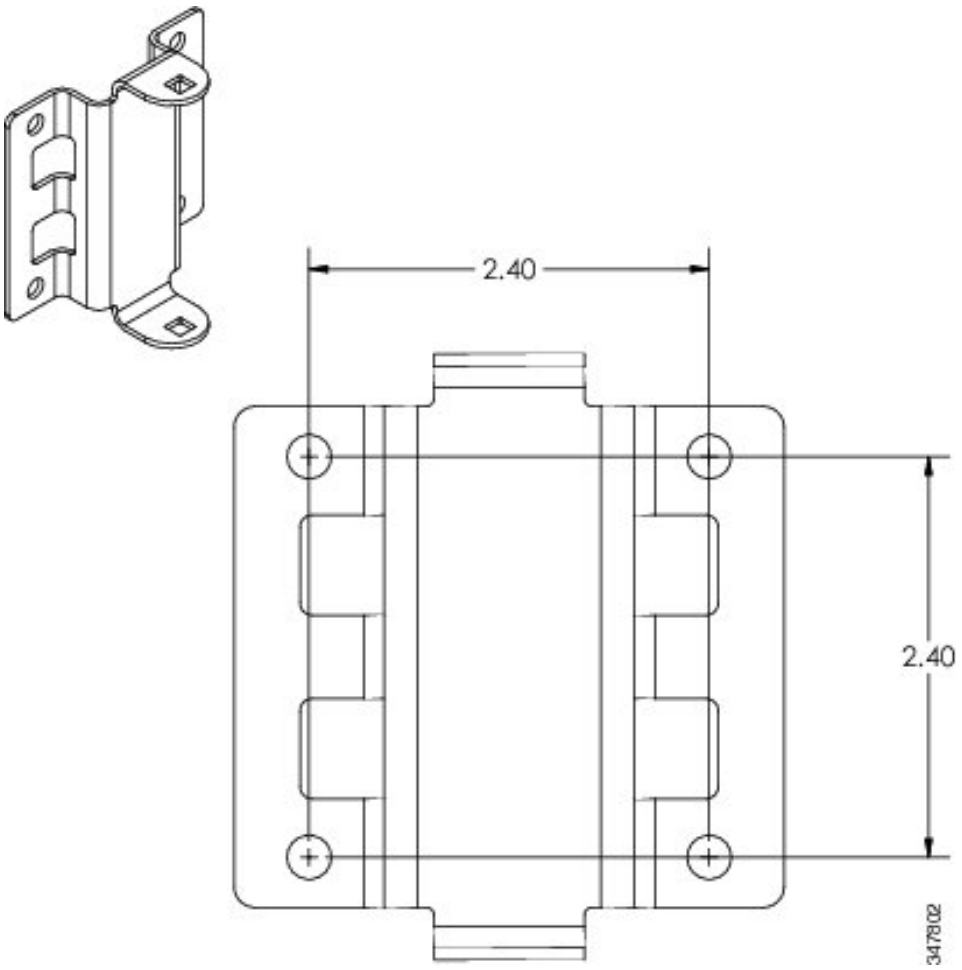

Step 5 Attach antenna assembly to azimuth bracket.

Figure 11: Attaching Antenna Assembly

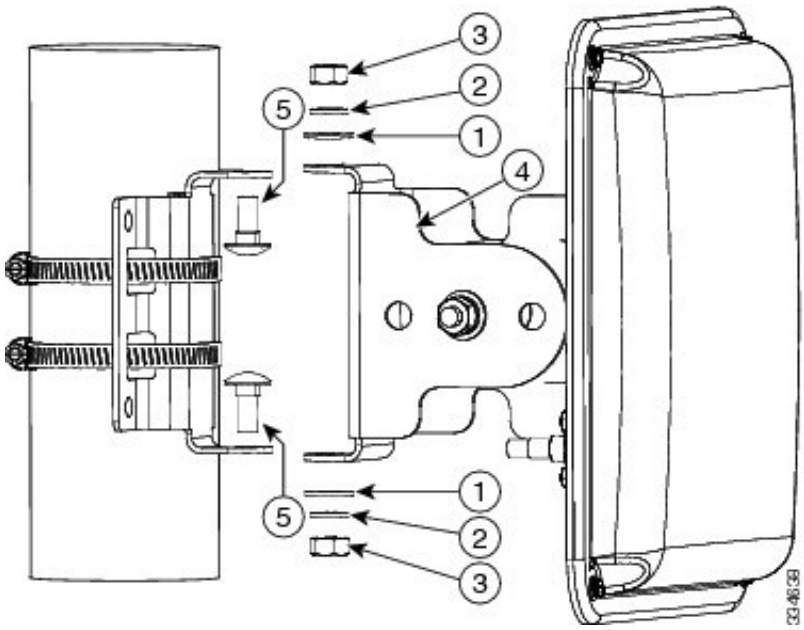

1	1/4-in. flat washer
2	1/4-in. spring lock washer
3	1/4-in. 20 hex nut
4	Elevation adjustable bracket
5	1/4-in. 20x3/4 carriage bolt

Step 6 Adjust the position of the antenna to the desired azimuth and elevation angles and tighten all pivot hardware (4 places) to a maximum torque of 55 in-lbf (6.2 Nm). The bracket allows the antenna position to be adjustable to +/–45 degrees azimuth and +/–60 degrees elevation.

Figure 12: Adjusting Antenna Position

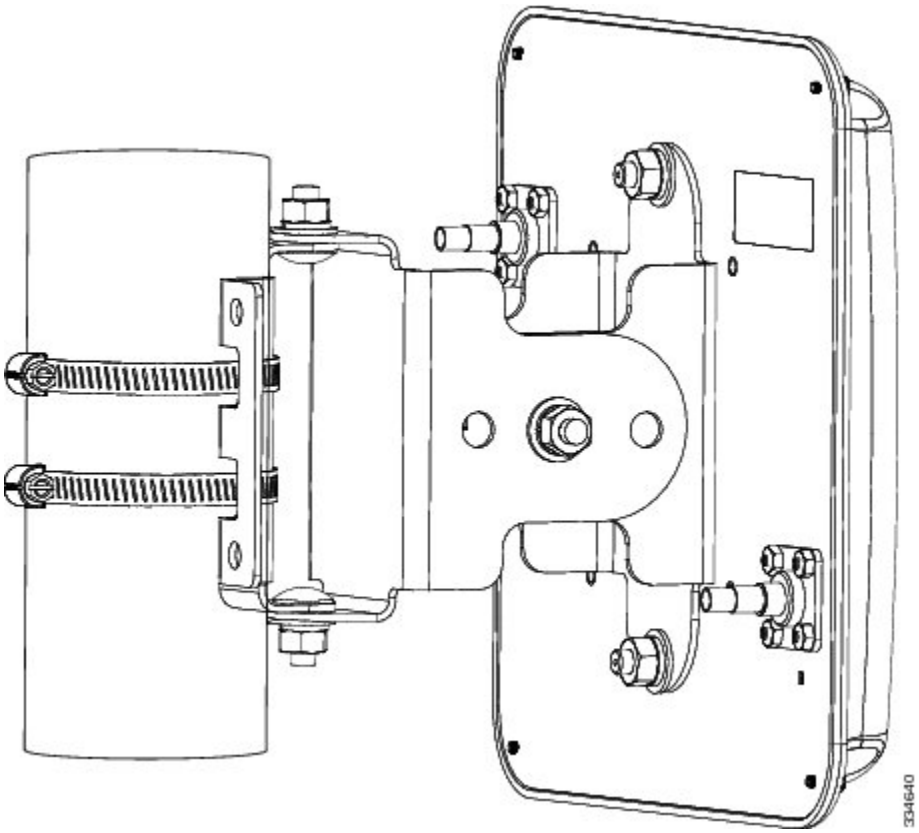

Note Cisco recommends grounding the antenna. Refer to that section within this chapter.

Antenna Cable Information

If the antenna is used with the Cisco 1552CU or 1552EU access point, the port A of the antenna must be connected to port 4 of the access point, port B of the antenna must be connected to port 6 of the access point, and port 5 of the access point must be capped with the cap enclosed with the antenna.

Note Coaxial cable loses efficiency as the frequency increases, resulting in signal loss. The cable should be kept as short as possible because cable length also causes signal loss (the longer the run, the greater the loss).

Note The antenna cable has a 0.5 in. (12.7 mm) bend radius. Sharply bending or crimping the cable may cause a degradation in performance

The antenna terminates with an N-male plug after a short, 2.5- foot (0.76-m) cable. The mating connector to the antenna is an appropriate N-female jack. The connector on the opposite end will vary according to the type of equipment used.

After the cable is attached to the antenna, make sure that the connections are sealed (if outdoors) to prevent moisture and other weathering elements from affecting performance. Cisco recommends using a coax seal (such as CoaxSeal) for outdoor connections. Silicone sealant or electrical tape are not recommended for sealing outdoor connections.

Grounding the Antenna

Follow these steps to ground the antenna in accordance with national electrical code instructions.

1. Use No. 10 AWG copper or No. 8 or larger copper-clad steel or bronze wire as ground wires for both mast and lead-in. Securely clamp the wire to the bottom of the mast.
2. Secure the lead-in wire to an antenna discharge unit and the mast ground wire to the building with stand-off insulators spaced from 4 foot (1.2 m) to 8 foot (2.4 m) apart.
3. Mount the antenna discharge unit as close as possible to where the lead-in wire enters the building.
4. Drill a hole in the building's wall as close as possible to the equipment to which you will connect the lead-in cable.
5. There may be wires in the wall. Make sure your drilling location is clear of any obstructions or other hazards.
6. Pull the cable through the hole and form a drip loop close to where it enters the building.
7. Thoroughly waterproof the lead-in area.
8. Install a lightning arrestor.
9. Connect the lead-in cable to the equipment.

Communications, Services, and Additional Information

- To receive timely, relevant information from Cisco, sign up at Cisco Profile Manager .
- To get the business impact you're looking for with the technologies that matter, visit Cisco Services .
- To submit a service request, visit Cisco Support .
- To discover and browse secure, validated enterprise-class apps, products, solutions and services, visit Cisco Marketplace .
- To obtain general networking, training, and certification titles, visit Cisco Press .
- To find warranty information for a specific product or product family, access Cisco Warranty Finder .

Modifications to this product not authorized by Cisco could void the FCC approval and negate your authority to operate the product.

The Cisco implementation of TCP header compression is an adaptation of a program developed by the University of California, Berkeley (UCB) as part of UCB's public domain version of the UNIX operating system. All rights reserved. Copyright © 1981, Regents of the University of California.

NOTWITHSTANDING ANY OTHER WARRANTY HEREIN, ALL DOCUMENT FILES AND SOFTWARE OF THESE SUPPLIERS ARE PROVIDED "AS IS" WITH ALL FAULTS. CISCO AND THE ABOVE-NAMED SUPPLIERS DISCLAIM ALL WARRANTIES, EXPRESSED OR IMPLIED, INCLUDING, WITHOUT LIMITATION, THOSE OF MERCHANTABILITY, FITNESS FOR A PARTICULAR PURPOSE AND NONINFRINGEMENT OR ARISING FROM A COURSE OF DEALING, USAGE, OR TRADE PRACTICE.

IN NO EVENT SHALL CISCO OR ITS SUPPLIERS BE LIABLE FOR ANY INDIRECT, SPECIAL, CONSEQUENTIAL, OR INCIDENTAL DAMAGES, INCLUDING, WITHOUT LIMITATION, LOST PROFITS OR LOSS OR DAMAGE TO DATA ARISING OUT OF THE USE OR INABILITY TO USE THIS MANUAL, EVEN IF CISCO OR ITS SUPPLIERS HAVE BEEN ADVISED OF THE POSSIBILITY OF SUCH DAMAGES.

Any Internet Protocol (IP) addresses and phone numbers used in this document are not intended to be actual addresses and phone numbers. Any examples, command display output, network topology diagrams, and other figures included in the document are shown for illustrative purposes only. Any use of actual IP addresses or phone numbers in illustrative content is unintentional and coincidental.

All printed copies and duplicate soft copies of this document are considered uncontrolled. See the current online version for the latest version.

Cisco has more than 200 offices worldwide. Addresses, phone numbers, and fax numbers are listed on the Cisco website at www.cisco.com/go/offices .

© 2015-2021 Cisco Systems, Inc. All rights reserved.