IBM Flex System x240 Compute Node
Types 7863, 8737, 8738, and 8956

Installation and Service Guide

IBM Flex System x240 Compute Node
Types 7863, 8737, 8738, and 8956

Installation and Service Guide

Note

Before using this information and the product it supports, read the general information in "Notices" on page 641, the *Warranty Information* document, and the *IBM Safety Information* and the *Environmental Notices and User Guide* documents on the IBM *Documentation* CD.

Seventh Edition, March 2017

© Copyright IBM Corporation 2013, 2014.
US Government Users Restricted Rights – Use, duplication or disclosure restricted by GSA ADP Schedule Contract with IBM Corp.

Contents

Safety v
Guidelines for trained service technicians vi
Inspecting for unsafe conditions vi
Guidelines for servicing electrical equipment . . vii
Safety statements viii

Chapter 1. Introduction 1
Related documentation 2
The IBM Documentation CD 3
Hardware and software requirements 3
Using the Documentation Browser 3
Notices and statements in this document 4
Features and specifications. 4
What your compute node offers 6
Reliability, availability, and serviceability features . . 8
Major components of the compute node 10
Power, controls, and indicators 10
Compute node controls, connectors, and LEDs . 10
Console breakout cable 13
Turning on the compute node 14
Turning off the compute node 15
System-board layouts 16
System-board connectors 16
System-board jumpers 17
System-board LEDs. 17
System-board switches. 18

Chapter 2. Configuring 21
Updating firmware and device drivers 21
Recovering a UEFI image. 22
Configuring the compute node 23
Using the Setup utility. 25
Nx boot failure 29
Setting the boot protocol to boot from legacy devices using the Setup utility 30
Using the Boot Selection Menu program. . . . 30
Updating the Universally Unique Identifier (UUID) and DMI/SMBIOS data with vital product data 31
Configuring a RAID array 34
Using the LSI Logic Configuration Utility . . . 35
Features on Demand 35
Setting up the LAN-on-motherboard (LOM) feature 36

Chapter 3. Installing the operating system. 39
Using the ServerGuide Setup and Installation CD . 40
ServerGuide features 41
Typical operating-system installation 41
Installing the operating system without using ServerGuide 42
Using IBM ServerGuide Scripting Toolkit 42

Chapter 4. Accessing the IMM2 43
Accessing the IMM2 remotely 43
Viewing the network access tag. 43
Logging on to the IMM2 web interface 44
IMM2 action descriptions. 45
Accessing the IMM2 using the LAN over USB interface 48
Potential conflicts with the LAN over USB interface 49
Resolving conflicts with the IMM2 LAN over USB interface. 49
Configuring the LAN over USB interface manually 49

Chapter 5. Parts listing, Types 7863, 8737, 8738, and 8956. 53

Chapter 6. Troubleshooting 61
Service bulletins 61
Diagnostic tools 61
Light path diagnostics 61
IMM event log 64
IBM Dynamic System Analysis 66
DSA diagnostic test results 68
Event messages. 176
IMM messages 176
UEFI diagnostic codes 520
Troubleshooting by symptom 543
Compute node start problems 543
Connectivity problems 543
Hard disk drive problems 559
Intermittent problems 560
Intermittent connectivity problems 561
Memory problems. 561
Observable problems 562
Optional device and replaceable component installation problems 563
Performance problems 564
Power-on problems 564
Software problems. 566
Undetermined problems. 566
Collecting service data 567

Chapter 7. Installing, removing, and replacing compute node components . 569
Installing an optional device 569
Installation guidelines 569
System reliability guidelines 569
Handling static-sensitive devices 570
Returning a device or component 570
Updating the compute node configuration. . . 570
Removing a compute node from a chassis 571
Installing a compute node in a chassis 572

© Copyright IBM Corp. 2013, 2014

Removing and replacing consumable and structural parts 573
Removing the chassis bulkhead 573
Installing the chassis bulkhead 574
Removing the compute node cover 575
Installing the compute node cover 577
Removing the front handle 578
Installing the front handle 579
Removing the hard disk drive cage 580
Installing the hard disk drive cage 581
Removing and replacing Tier 1 customer replaceable units (CRUs) 582
Removing the adapter-retention assembly . . . 582
Installing the adapter-retention assembly . . . 584
Removing the bezel 585
Installing the bezel 586
Removing the CMOS battery 587
Installing the CMOS battery 588
Removing a DIMM 589
Installing a DIMM. 591
Removing a fabric connector 597
Installing a fabric connector 598
Removing the hard disk drive backplane . . . 599
Installing the hard disk drive backplane . . . 600
Removing a hot-swap hard disk drive 601
Installing a hot-swap hard disk drive 602
Removing an interposer cable 603
Installing an interposer cable 604
Removing an I/O expansion adapter 605
Installing an I/O expansion adapter 606
Removing the light path diagnostics panel . . 608
Installing the light path diagnostics panel . . . 608
Removing the RFID tag 609
Installing the RFID tag 610
Removing the USB enablement kit 611
Installing the USB enablement kit 612
Removing the USB flash drive. 613
Installing the USB flash drive 614
Removing and replacing Tier 2 customer replaceable units (CRUs) 615
Removing a microprocessor and heat sink . . . 615
Installing a microprocessor and heat sink . . . 621
Thermal grease 628
Removing a microprocessor-retention assembly 629
Installing a microprocessor-retention assembly 630
Removing the system-board assembly 631
Installing the system-board assembly 633

Appendix. Getting help and technical assistance. 637
Before you call 637
Using the documentation 638
Getting help and information from the World Wide Web 638
How to send DSA data to IBM 638
Software service and support 639
Hardware service and support 639
IBM Taiwan product service 639

Notices 641
Trademarks 641
Important notes 642
Particulate contamination 643
Documentation format 644
Telecommunication regulatory statement 644
Electronic emission notices 644
Federal Communications Commission (FCC) statement. 644
Industry Canada Class A emission compliance statement. 645
Avis de conformité à la réglementation d'Industrie Canada 645
Australia and New Zealand Class A statement 645
European Union EMC Directive conformance statement. 645
Germany Class A statement 646
Japan VCCI Class A statement. 647
Japan Electronics and Information Technology Industries Association (JEITA) statement . . . 647
Korea Communications Commission (KCC) statement. 647
Russia Electromagnetic Interference (EMI) Class A statement 647
People's Republic of China Class A electronic emission statement 647
Taiwan Class A compliance statement 648

Index 649

Safety

Before installing this product, read the Safety Information.

قبل تركيب هذا المنتج، يجب قراءة الملاحظات الآمنية

Antes de instalar este produto, leia as Informações de Segurança.

在安装本产品之前，请仔细阅读 Safety Information
(安全信息)。

安裝本產品之前，請先閱讀「安全資訊」。

Prije instalacije ovog produkta obavezno pročitajte Sigurnosne Upute.

Před instalací tohoto produktu si přečtěte příručku bezpečnostních instrukcí.

Læs sikkerhedsforskrifterne, før du installerer dette produkt.

Lees voordat u dit product installeert eerst de veiligheidsvoorschriften.

Ennen kuin asennat tämän tuotteen, lue turvaohjeet kohdasta Safety Information.

Avant d'installer ce produit, lisez les consignes de sécurité.

Vor der Installation dieses Produkts die Sicherheitshinweise lesen.

Πριν εγκαταστήσετε το προϊόν αυτό, διαβάστε τις πληροφορίες ασφάλειας
(safety information).

לפני שתתקינו מוצר זה, קראו את הוראות הבטיחות.

A termék telepítése előtt olvassa el a Biztonsági előírásokat!

Prima di installare questo prodotto, leggere le Informazioni sulla Sicurezza.

製品の設置の前に、安全情報をお読みください。

본 제품을 설치하기 전에 안전 정보를 읽으십시오.

Пред да се инсталира овој продукт, прочитајте информацијата за безбедност.

© Copyright IBM Corp. 2013, 2014

ᠤᠨᠱᠢᠬᠤ ᠤᠮᠤᠰᠤᠭ᠎ᠠ ᠪᠦᠬᠦᠢ ᠠᠭᠤᠯᠬᠤᠳ ᠤᠨᠱᠢᠵᠤ ᠲᠠᠨᠢᠯᠴᠠᠭᠠᠷᠠᠢ᠃

Les sikkerhetsinformasjonen (Safety Information) før du installerer dette produktet.

Przed zainstalowaniem tego produktu, należy zapoznać się
z książką "Informacje dotyczące bezpieczeństwa" (Safety Information).

Antes de instalar este produto, leia as Informações sobre Segurança.

Перед установкой продукта прочтите инструкции по
технике безопасности.

Pred inštaláciou tohto zariadenia si pečítaje Bezpečnostné predpisy.

Pred namestitvijo tega proizvoda preberite Varnostne informacije.

Antes de instalar este producto, lea la información de seguridad.

Läs säkerhetsinformationen innan du installerar den här produkten.

ཐོན་རྫས་འདི་བདེ་སྒྲིད་མ་བྱས་གོང་། ·སྐོར་ཕྱི་ཡིད་གཟབ་
བྱ་འདུ་མིན་ཡོད་པའི་འོད་སྣེར་བལྟ་དགོས།

Bu ürünü kurmadan önce güvenlik bilgilerini okuyun.

ەزكۇر مەھسۇلاتنى ئورنىتىشتىن بۇرۇن بىخەتەرلىك ئۇچۇرلىرىنى ئوقۇپ چىقىڭ.

Youq mwngz yungh canjbinj neix gaxgonq, itdingh aeu doeg aen
canjbinj soengq cungj vahgangj ancien siusik.

Guidelines for trained service technicians

This section contains information for trained service technicians.

Inspecting for unsafe conditions

Use this information to help you identify potential unsafe conditions in an IBM® product that you are working on.

Each IBM product, as it was designed and manufactured, has required safety items to protect users and service technicians from injury. The information in this section addresses only those items. Use good judgment to identify potential unsafe conditions that might be caused by non-IBM alterations or attachment of non-IBM features or optional devices that are not addressed in this section. If you identify

an unsafe condition, you must determine how serious the hazard is and whether you must correct the problem before you work on the product.

Consider the following conditions and the safety hazards that they present:

- Electrical hazards, especially primary power. Primary voltage on the frame can cause serious or fatal electrical shock.
- Explosive hazards, such as a damaged CRT face or a bulging capacitor.
- Mechanical hazards, such as loose or missing hardware.

To inspect the product for potential unsafe conditions, complete the following steps:

1. Make sure that the power is off and the power cords are disconnected.
2. Make sure that the exterior cover is not damaged, loose, or broken, and observe any sharp edges.
3. Check the power cords:
   - Make sure that the third-wire ground connector is in good condition. Use a meter to measure third-wire ground continuity for 0.1 ohm or less between the external ground pin and the frame ground.
   - Make sure that the power cords are the correct type.
   - Make sure that the insulation is not frayed or worn.
4. Remove the cover.
5. Check for any obvious non-IBM alterations. Use good judgment as to the safety of any non-IBM alterations.
6. Check inside the system for any obvious unsafe conditions, such as metal filings, contamination, water or other liquid, or signs of fire or smoke damage.
7. Check for worn, frayed, or pinched cables.
8. Make sure that the power-supply cover fasteners (screws or rivets) have not been removed or tampered with.

Guidelines for servicing electrical equipment

Observe these guidelines when you service electrical equipment.

- Check the area for electrical hazards such as moist floors, nongrounded power extension cords, and missing safety grounds.
- Use only approved tools and test equipment. Some hand tools have handles that are covered with a soft material that does not provide insulation from live electrical current.
- Regularly inspect and maintain your electrical hand tools for safe operational condition. Do not use worn or broken tools or testers.
- Do not touch the reflective surface of a dental mirror to a live electrical circuit. The surface is conductive and can cause personal injury or equipment damage if it touches a live electrical circuit.
- Some rubber floor mats contain small conductive fibers to decrease electrostatic discharge. Do not use this type of mat to protect yourself from electrical shock.
- Do not work alone under hazardous conditions or near equipment that has hazardous voltages.
- Locate the emergency power-off (EPO) switch, disconnecting switch, or electrical outlet so that you can turn off the power quickly in the event of an electrical accident.
- Disconnect all power before you perform a mechanical inspection, work near power supplies, or remove or install main units.

- Before you work on the equipment, disconnect the power cord. If you cannot disconnect the power cord, have the customer power-off the wall box that supplies power to the equipment and lock the wall box in the off position.
- Never assume that power has been disconnected from a circuit. Check it to make sure that it has been disconnected.
- If you have to work on equipment that has exposed electrical circuits, observe the following precautions:
  - Make sure that another person who is familiar with the power-off controls is near you and is available to turn off the power if necessary.
  - When you work with powered-on electrical equipment, use only one hand. Keep the other hand in your pocket or behind your back to avoid creating a complete circuit that could cause an electrical shock.
  - When you use a tester, set the controls correctly and use the approved probe leads and accessories for that tester.
  - Stand on a suitable rubber mat to insulate you from grounds such as metal floor strips and equipment frames.
- Use extreme care when you measure high voltages.
- To ensure proper grounding of components such as power supplies, pumps, blowers, fans, and motor generators, do not service these components outside of their normal operating locations.
- If an electrical accident occurs, use caution, turn off the power, and send another person to get medical aid.

Safety statements

These statements provide the caution and danger information that is used in this documentation.

Important:

Each caution and danger statement in this documentation is labeled with a number. This number is used to cross reference an English-language caution or danger statement with translated versions of the caution or danger statement in the *Safety Information* document.

For example, if a caution statement is labeled `Statement 1`, translations for that caution statement are in the *Safety Information* document under `Statement 1`.

Be sure to read all caution and danger statements in this documentation before you perform the procedures. Read any additional safety information that comes with your system or optional device before you install the device.

Statement 1

DANGER

Electrical current from power, telephone, and communication cables is hazardous.

To avoid a shock hazard:

- **Do not connect or disconnect any cables or perform installation, maintenance, or reconfiguration of this product during an electrical storm.**
- **Connect all power cords to a properly wired and grounded electrical outlet.**
- **Connect to properly wired outlets any equipment that will be attached to this product.**
- **When possible, use one hand only to connect or disconnect signal cables.**
- **Never turn on any equipment when there is evidence of fire, water, or structural damage.**
- **Disconnect the attached power cords, telecommunications systems, networks, and modems before you open the device covers, unless instructed otherwise in the installation and configuration procedures.**
- **Connect and disconnect cables as described in the following table when installing, moving, or opening covers on this product or attached devices.**

To Connect:	**To Disconnect:**
1. Turn everything OFF.	1. Turn everything OFF.
2. First, attach all cables to devices.	2. First, remove power cords from outlet.
3. Attach signal cables to connectors.	3. Remove signal cables from connectors.
4. Attach power cords to outlet.	4. Remove all cables from devices.
5. Turn device ON.	

Statement 2

CAUTION:
When replacing the lithium battery, use only IBM Part Number 33F8354 or an equivalent type battery recommended by the manufacturer. If your system has a module containing a lithium battery, replace it only with the same module type made by the same manufacturer. The battery contains lithium and can explode if not properly used, handled, or disposed of.

Do not:

- **Throw or immerse into water**
- **Heat to more than 100°C (212°F)**
- **Repair or disassemble**

Dispose of the battery as required by local ordinances or regulations.

Statement 12

CAUTION:
The following label indicates a hot surface nearby.

Statement 21

CAUTION:
Hazardous energy is present when the blade is connected to the power source. Always replace the blade cover before installing the blade.

UL regulatory information

This device is for use only with Listed IBM Flex System Enterprise Chassis.

Chapter 1. Introduction

The IBM Flex System x240 Compute Node Types 7863, 8737, 8738, and 8956 is a high-availability, scalable compute node that is optimized to support the next-generation microprocessor technology and is ideally suited for medium and large businesses.

The IBM Flex System x240 Compute Node Types 7863, 8737, 8738, and 8956 is supported in the IBM Flex System Enterprise Chassis only.

This documentation provides the following information about setting up and troubleshooting the compute node:

- Starting and configuring the compute node
- Installing the operating system
- Diagnosing problems
- Installing, removing, and replacing components

Packaged with the compute node are software CDs that help you configure hardware, install device drivers, and install the operating system.

To download the latest firmware and device drivers, go to and select **IBM Flex System** and **IBM Flex System x240.**

The compute node comes with a limited warranty. For information about the terms of the warranty and getting service and assistance, see the *Warranty Information* document for your compute node. This document is available on the IBM *Documentation* CD.

You can obtain up-to-date information about the compute node at http://www.ibm.com/systems.

The compute node might have features that are not described in the documentation that comes with the compute node. The documentation might be updated occasionally to include information about those features. Technical updates might also be available to provide additional information that is not included in the compute node documentation. To obtain the most up-to-date documentation for this product, go to http://pic.dhe.ibm.com/infocenter/flexsys/information/index.jsp.

You can subscribe to information updates that are specific to your compute node at http://www.ibm.com/support/mynotifications.

The model number and serial number are on the ID label on the bezel on the front of the compute node, and on a label on the bottom of the compute node that is visible when the compute node is not in the IBM Flex System chassis. If the compute node comes with an RFID tag, the RFID tag covers the ID label on the bezel on the front of the compute node but you can open the RFID tag to see the ID label behind it.

Note: The illustrations in this document might differ slightly from your hardware.

© Copyright IBM Corp. 2013, 2014

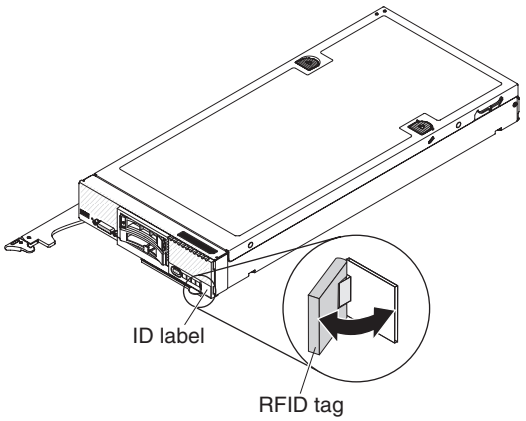

Related documentation

Use this information to identify and locate related compute node documentation.

This *Installation and Service Guide* contains general information about the compute node, including how to install supported optional devices and how to configure the compute node. It also contains information to help you solve problems yourself and instructions for removing and installing components, and it contains information for service technicians. Documents that are in Portable Document Format (PDF) are on the IBM *Documentation* CD. The following documentation is also available:

- *Safety Information*

  This document is in PDF. It contains translated caution and danger statements. Each caution and danger statement that appears in the documentation has a number that you can use to locate the corresponding statement in your language in the *Safety Information* document.
- *IBM Warranty Information*

  This printed document contains the warranty terms and a pointer to the IBM Statement of Limited Warranty on the IBM website.
- *Environmental Notices and User Guide*

  This document is in PDF. It contains translated environmental notices.
- *IBM License Agreement for Machine Code*

  This document is in PDF. It provides translated versions of the IBM License Agreement for Machine code for your compute node.
- *Licenses and Attributions Document*

  This document is in PDF. It provides information about the open-source notices.

In addition to the documentation in this library, be sure to review the *Installation and Service Guide* for your IBM Flex System chassis for information to help you prepare for system installation and configuration.

To check for updated documentation, go to http://www.ibm.com/supportportal.

You can also find documentation that is related to IBM Flex System products at http://pic.dhe.ibm.com/infocenter/flexsys/information/index.jsp.

The IBM Documentation CD

The IBM *Documentation* CD contains documentation for the compute node in Portable Document Format (PDF). It includes the IBM Documentation Browser to help you find information quickly.

You can run the IBM *Documentation* CD on any computer that meets the hardware and software requirements.

Hardware and software requirements

Use this information to determine the minimum hardware and software requirements.

The IBM *Documentation* CD requires the following minimum hardware and software:

- Microsoft Windows
- 100 MHz microprocessor
- 32 MB of RAM
- Adobe Acrobat Reader 3.0 (or later) or xpdf, which comes with Linux operating systems

Using the Documentation Browser

Use this information to start the Documentation Browser.

Use the Documentation Browser to browse the contents of the CD, read brief descriptions of the documents, and view documents, using Adobe Acrobat Reader or xpdf. The Documentation Browser automatically detects the regional settings in use in your system and displays the documents in the language for that region (if available). If a document is not available in the language for that region, the English-language version is displayed.

Use one of the following procedures to start the Documentation Browser:

- If Autostart is enabled, insert the CD into the CD or DVD drive. The Documentation Browser starts automatically.
- If Autostart is disabled or is not enabled for all users, use one of the following procedures:
  - If you are using a Windows operating system, insert the CD into the CD or DVD drive and click **Start → Run**. In the **Open** field, type

    ```
    e:\win32.bat
    ```

    where *e* is the drive letter of the CD or DVD drive, and click **OK**.
  - If you are using Red Hat Linux, insert the CD into the CD or DVD drive; then, run the following command from the /mnt/cdrom directory:

    ```
    sh runlinux.sh
    ```

Select the compute node from the **Product** menu. The **Available Topics** list displays all the documents for the compute node. Some documents might be in folders. A plus sign (+) indicates each folder or document that has additional documents under it. Click the plus sign to display the additional documents.

When you select a document, a description of the document is displayed under **Topic Description**. To select more than one document, press and hold the Ctrl key while you select the documents. Click **View Book** to view the selected document

or documents in Acrobat Reader or xpdf. If you selected more than one document, all the selected documents are opened in Acrobat Reader or xpdf.

To search all the documents, type a word or word string in the **Search** field and click **Search**. The documents in which the word or word string appears are listed in order of the most occurrences. Click a document to view it. Press Ctrl+F to use the Acrobat search function, or press Alt+F to use the xpdf search function within the document.

Click **Help** for detailed information about using the Documentation Browser.

Notices and statements in this document

Use this information to understand the most common documentation notices and statements and how they are used.

The caution and danger statements in this document are also in the multilingual *Safety Information* document, which is on the IBM *Documentation* CD. Each statement is numbered for reference to the corresponding statement in the *Safety Information* document.

The following notices and statements are used in this document:

- **Note:** These notices provide important tips, guidance, or advice.
- **Important:** These notices provide information or advice that might help you avoid inconvenient or problem situations.
- **Attention:** These notices indicate possible damage to programs, devices, or data. An attention notice is placed just before the instruction or situation in which damage might occur.
- **Caution:** These statements indicate situations that can be potentially hazardous to you. A caution statement is placed just before the description of a potentially hazardous procedure step or situation.
- **Danger:** These statements indicate situations that can be potentially lethal or hazardous to you. A danger statement is placed just before the description of a potentially lethal or hazardous procedure step or situation.

Features and specifications

Use this information to view specific information about the compute node, such as compute node hardware features and the dimensions of the compute node.

Notes:

1. Power, cooling, and chassis systems management are provided by the IBM Flex System chassis.
2. The operating system in the compute node must provide USB support for the compute node to recognize and use USB media drives and devices. The IBM Flex System chassis uses USB for internal communication with these devices.

The following table is a summary of the features and specifications of the IBM Flex System x240 Compute Node Types 7863, 8737, 8738, and 8956.

Table 1. Features and specifications

Features and specifications	
Microprocessor: Up to two multi-core Intel Xeon microprocessors. **Note:** Use the Setup utility to determine the type and speed of the microprocessors in the compute node. **Integrated functions:** • Renesas SH7757 (IMM2) baseboard management controller (BMC) with integrated VGA controller • (Models with embedded virtual fabric only) integrated dual-port 10 Gigabit Ethernet controller • Light path diagnostics • Automatic server restart (ASR) • One LSI 2004 SAS controller with support for RAID level-0 or RAID level-1 • One external USB port • Support for up to two internal USB ports • Serial over LAN (SOL) • Wake on LAN (WOL) **Memory:** • 24 dual inline memory module (DIMM) connectors • Type: Low-profile (LP) double-data rate (DDR3) DRAM • Supports 2 GB, 4 GB, 8 GB, 16 GB, and 32 GB DIMMs with up to 768 GB of total memory on the system board • Support for RDIMMs and LRDIMMs (combining is not supported) • Support for RDIMMs, UDIMMs, and LRDIMMs (combining is not supported) **Predictive Failure Analysis (PFA) alerts:** • Microprocessors • Memory • Hard disk drives **Drives:** Supports up to two hot-swap, small form factor (SFF) Serial Attached SCSI (SAS) or Serial ATA (SATA) hard disk drives. **Upgradeable firmware:** All firmware is field upgradeable. **Security:** Fully compliant with NIST 800-131A. The security cryptography mode set by the managing device (CMM or Flex System Manager management node) determines the security mode in which the compute node operates.	**Size:** • Height: 55.5 mm (2.19 in) • Depth: 492.7 mm (19.38 in) • Width: 217.35 mm (8.56 in) • Maximum weight: 7.07 kg (15.6 lb) **Environment:** The IBM Flex System x240 Compute Node Types 7863, 8737, 8738, and 8956 complies with ASHRAE class A3 specifications. • Power on[1]: – Temperature: 5°C - 40°C (41°F - 104°F)[2] – Humidity, non-condensing: -12°C dew point (10.4°F) and 8% - 85% relative humidity[3,4] – Maximum dew point: 24°C (75°F) – Maximum altitude: 3048 m (10,000 ft) – Maximum rate of temperature change: 5°C/hr (41°F/hr)[5] • Power off[6]: – Temperature: 5°C to 45°C (41°F - 113°F) – Relative humidity: 8% - 85% – Maximum dew point: 27°C (80.6°F) • Storage (non-operating): – Temperature: 1°C to 60°C (33.8°F - 140°F) – Altitude: 3050 m (10,006 ft) – Relative humidity: 5% - 80% – Maximum dew point: 29°C (84.2°F) • Shipment (non-operating)[7]: – Temperature: -40°C to 60°C (-40°F - 140°F) – Altitude: 10,700 m (35,105 ft) – Relative humidity: 5% - 100% – Maximum dew point: 29°C (84.2°F)[8] • Particulate contamination **Attention:** Airborne particulates and reactive gases acting alone or in combination with other environmental factors such as humidity or temperature might pose a risk to the compute node. For information about the limits for particulates and gases, see “Particulate contamination” on page 643.

Table 1. Features and specifications (continued)

Features and specifications
1. Chassis is powered on. 2. A3 - Derate maximum allowable temperature 1°C/175 m above 950 m. 3. The minimum humidity level for class A3 is the higher (more moisture) of the -12 °C dew point and the 8% relative humidity. These intersect at approximately 25°C. Below this intersection (~25C), the dew point (-12 °C) represents the minimum moisture level; above the intersection, relative humidity (8%) is the minimum. 4. Moisture levels lower than 0.5°C DP, but not lower -10 °C DP or 8% relative humidity, can be accepted if appropriate control measures are implemented to limit the generation of static electricity on personnel and equipment in the data center. All personnel and mobile furnishings and equipment must be connected to ground via an appropriate static control system. The following items are considered the minimum requirements: a. Conductive materials (conductive flooring, conductive footwear on all personnel who go into the datacenter; all mobile furnishings and equipment will be made of conductive or static dissipative materials). b. During maintenance on any hardware, a properly functioning wrist strap must be used by any personnel who contacts IT equipment. 5. 5°C/hr for data centers employing tape drives and 20°C/hr for data centers employing disk drives. 6. Chassis is removed from original shipping container and is installed but not in use, for example, during repair, maintenance, or upgrade. 7. The equipment acclimation period is 1 hour per 20°C of temperature change from the shipping environment to the operating environment. 8. Condensation, but not rain, is acceptable.

What your compute node offers

Your compute node offers features such as the integrated management module 2, hard disk drive support, systems-management support, IBM X-Architecture®, microprocessor technology, integrated network support, large system-memory capacity, light path diagnostics LEDs, PCI Express®, and power throttling.

- **Features on Demand**

  If a Features on Demand feature is integrated in the compute node or in an optional device that is installed in the compute node, you can purchase an activation key to activate the feature. For information about Features on Demand, see "Features on Demand" on page 35.

- **Flexible network support**

  The compute node provides flexible network capabilities:

  – **Models with embedded virtual fabric**

    The integrated dual-port 10 Gigabit Ethernet controller supports connections to a 10 Mbps, 100 Mbps, or 1000 Mbps network through an Ethernet-compatible switch module in the chassis. The controller supports connections at 10 Gb. The controller also supports Wake on LAN technology. You can install an additional I/O expansion adapter for network support.

  – **Models without embedded virtual fabric**

    The compute node has connectors on the system board for optional expansion adapters for adding network communication capabilities to the compute node. You can install up to two I/O expansion adapters for network support. This provides the flexibility to install expansion adapters that support a variety of network communication technologies.

- **Hard disk drive support**

  The compute node supports up to two hot-swap hard disk drives. You can implement RAID 0 or RAID 1 for the drives.

- **IBM *ServerGuide Setup and Installation* CD**

  The *ServerGuide Setup and Installation* CD, which you can download from the web, provides programs to help you set up the compute node and install a

Windows operating system. The ServerGuide program detects installed optional hardware devices and provides the correct configuration programs and device drivers. For more information, see "Using the ServerGuide Setup and Installation CD" on page 40.

- **IBM X-Architecture**

  IBM X-Architecture systems combine proven, innovative IBM designs to make your x86-processor-based compute node powerful, scalable, and reliable. For more information, see http://www.ibm.com/systems/x/hardware/enterprise/xarchitecture.html.

- **Integrated management module II (IMM2)**

  The integrated management module II (IMM2) combines systems-management functions, video controller, the remote presence, and blue-screen capture features in a single chip. The IMM2 provides advanced systems-management control, monitoring, and alerting function. If an environmental condition exceeds a threshold or if a system component fails, the IMM2 lights LEDs to help you diagnose the problem, records the error in the IMM event log, and alerts you to the problem.

  Optionally, the IMM2 also provides a virtual presence capability for remote systems-management capabilities. The IMM2 provides remote systems management through industry-standard interfaces:

  – Common Information Model (CIM)
  – Intelligent Platform Management Interface (IPMI) version 2.0
  – Simple Network Management Protocol (SNMP) version 3.0
  – Web browser

  For more information, see Chapter 4, "Accessing the IMM2," on page 43.

- **Large system-memory capacity**

  The compute node supports up to 768 GB of system memory. The memory controller provides support for up to 24 industry-standard registered ECC DDR3 low-profile (LP) DIMMs on the system board. For the most current list of supported DIMMs, see http://www.ibm.com/systems/info/x86servers/serverproven/compat/us.

- **Light path diagnostics**

  Light path diagnostics provides light-emitting diodes (LEDs) to help you diagnose problems. For more information, see "Light path diagnostics" on page 61.

- **Microprocessor technology**

  The compute node supports up to two multi-core Intel Xeon microprocessors. For more information about supported microprocessors, see http://www.ibm.com/systems/info/x86servers/serverproven/compat/us.

  Note: The optional microprocessors that IBM supports are limited by the capacity and capability of the compute node. Any microprocessor that you install must have the same specifications as the microprocessor that came with the compute node.

- **PCI Express**

  PCI Express is a serial interface that is used for chip-to-chip interconnect and expansion adapter interconnect. You can add optional I/O and storage devices.

  The optional IBM Flex System PCIe Expansion Node supports additional PCIe adapters and I/O expansion adapters to provide a cost-effective way for you to increase and customize the capabilities of the compute node. For additional

information, see http://pic.dhe.ibm.com/infocenter/flexsys/information/index.jsp?topic=%2Fcom.ibm.acc.pme.doc%2Fproduct_page.html.

- **Power throttling**

  By enforcing a power policy known as power-domain oversubscription, the IBM Flex System chassis can share the power load between two or more power supply modules to ensure sufficient power for each device in the IBM Flex System chassis. This policy is enforced when the initial power is applied to the IBM Flex System chassis or when a compute node is inserted into the IBM Flex System chassis.

  The following settings for this policy are available:

  – Basic power management
  – Power module redundancy
  – Power module redundancy with compute node throttling allowed

  You can configure and monitor the power environment by using the Chassis Management Module. For more information, see the the IBM Flex System Chassis Management Module: Command-Line Interface Reference Guide at http://pic.dhe.ibm.com/infocenter/flexsys/information/topic/com.ibm.acc.cmm.doc/dw1kt_cmm_cli_book.pdf.

- **Systems-management support**

  The compute node IMM2 provides a web interface for remote systems-management support. You can use the interface to view system status and to control systems-management functions and IMM management settings.

  The IMM2 communicates with the IBM Flex System Chassis Management Module (CMM) and IBM Flex System Manager management software (if installed).

  – The CMM is a hot-swap module that provides systems-management functions for all components in an IBM Flex System chassis. It controls a serial port for remote connection and a 1 Gbps Ethernet remote-management connection. For more information, see the the IBM Flex System Chassis Management Module: Command-Line Interface Reference Guide at http://pic.dhe.ibm.com/infocenter/flexsys/information/topic/com.ibm.acc.cmm.doc/dw1kt_cmm_cli_book.pdf.
  – The IBM Flex System Manager management software is a platform-management foundation that streamlines the way you manage physical and virtual systems in a heterogeneous environment. By using industry standards, IBM Flex System Manager management software supports multiple operating systems and virtualization technologies. For more information, see the IBM Flex System Manager Software: Installation and Service Guide at http://pic.dhe.ibm.com/infocenter/flexsys/information/topic/com.ibm.acc.8731.doc/product_page.html.

Reliability, availability, and serviceability features

Three of the most important features in compute node design are reliability, availability, and serviceability (RAS). These RAS features help to ensure the integrity of the data that is stored in the compute node, the availability of the compute node when you need it, and the ease with which you can diagnose and correct problems.

The compute node has the following RAS features:

- Advanced Configuration and Power Interface (ACPI)
- Automatic server restart (ASR)
- Built-in diagnostics using DSA Preboot

- Built-in monitoring for temperature, voltage, and hard disk drives
- Customer support center 24 hours per day, 7 days a week[1]
- Customer upgrade of flash ROM-resident code and diagnostics
- Customer-upgradeable Unified Extensible Firmware Interface (UEFI) code and diagnostics
- ECC protected DDR3 DIMMs
- ECC protection on the L2 cache
- Error codes and messages
- Integrated management module II (IMM2) that communicates with the Chassis Management Module to enable remote systems management
- Light path diagnostics
- Memory parity testing
- Microprocessor built-in self-test (BIST) during power-on self-test (POST)
- Microprocessor serial number access
- Processor presence detection
- ROM-resident diagnostics
- System-error logging
- Vital product data (VPD) on memory
- Wake on LAN capability
- Wake on PCI (PME) capability

1. Service availability varies by country. Response time varies depending on the number and nature of incoming calls.

Major components of the compute node

Use this information to locate the major components on the compute node.

The following illustration shows the major components of the compute node.

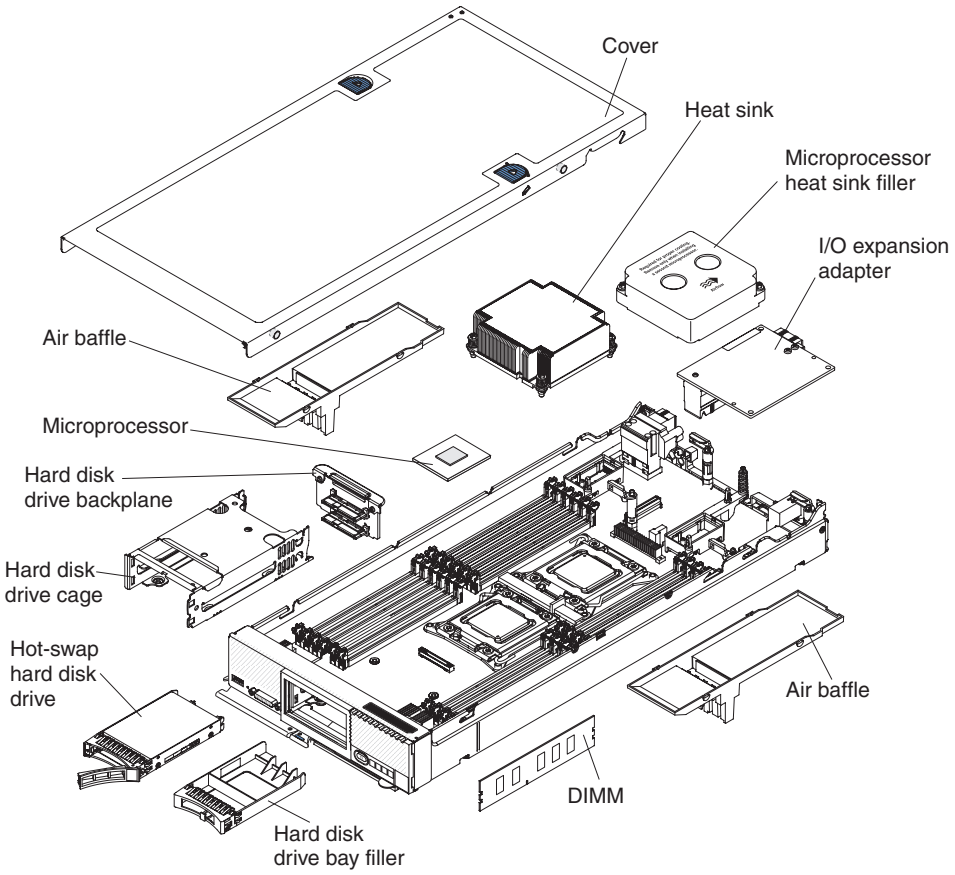

Power, controls, and indicators

Use this information to view power features, turn on and turn off the compute node, and view the functions of the controls and indicators.

Compute node controls, connectors, and LEDs

Use this information for details about the controls, connectors, and LEDs.

The following illustration identifies the buttons, connectors, and LEDs on the control panel.

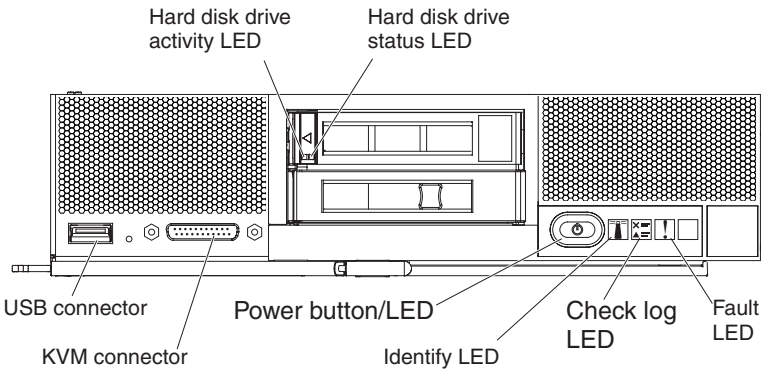

Hard disk drive activity LED (green)
When this green LED is lit, it indicates that there is activity on the hard disk drive.

Hard disk drive status LED
When this yellow LED is lit, it indicates that an error has occurred with the hard disk drive. The LED turns off only after the error is corrected. You can check the CMM event log to determine the source of the condition. For more information, see "Viewing event logs without restarting the compute node" on page 64.

Fault LED
When this yellow LED is lit, it indicates that a system error has occurred in the compute node. In addition, the fault LED on the chassis system LED panel is lit. You can check the CMM event log to determine the source of the condition. For more information, see "Viewing event logs without restarting the compute node" on page 64. See "Light path diagnostics LEDs" on page 63 for more information about the LEDs on the compute node.

The fault LED turns off only after the error is corrected.

Note: When the fault LED turns off, you should also clear the IMM event log. Use the Setup utility to clear the IMM event log.

Check log LED
When this yellow LED is lit, it indicates that a condition that causes an event to be logged in the IMM event log has occurred.

The check log LED can be turned off through the CMM **led** command, the CMM web interface, or IBM Flex System Manager management software (if installed).

- For more information about the CMM **led** command, see the IBM Flex System Chassis Management Module: Command-Line Interface Reference Guide at http://pic.dhe.ibm.com/infocenter/flexsys/information/topic/com.ibm.acc.cmm.doc/cli_command_led.html.
- From the CMM web interface, select **Compute Nodes** from the **Chassis Management** menu. For more information, see the the IBM Flex System Chassis Management Module: User's Guide at http://pic.dhe.ibm.com/infocenter/flexsys/information/topic/com.ibm.acc.cmm.doc/cmm_user_guide.html. All fields and options are described in the CMM web interface online help.
- For more information about IBM Flex System Manager management software, see the IBM Flex System Manager Software: Installation and

Service Guide at http://pic.dhe.ibm.com/infocenter/flexsys/information/topic/com.ibm.acc.8731.doc/product_page.html.

Notes:

1. Alternatively, you can use the **CMM_INDICATES_ITE_ERROR_N** command to light the check log LED. See the the IBM Flex System Chassis Management Module: Command-Line Interface Reference Guide at http://pic.dhe.ibm.com/infocenter/flexsys/information/topic/com.ibm.acc.cmm.doc/dw1kt_cmm_cli_book.pdf for more information.
2. You can check the CMM event log to determine the source of the condition. For more information, see "Viewing event logs without restarting the compute node" on page 64.

Identify LED

The system administrator can remotely light this blue LED to aid in visually locating the compute node. When this LED is lit, the identify LED on the IBM Flex System chassis is also lit. The identify LED can be lit and turned off through the CMM **led** command, the CMM web interface, or IBM Flex System Manager management software (if installed).

- For more information about the CMM **led** command, see the IBM Flex System Chassis Management Module: Command-Line Interface Reference Guide at http://pic.dhe.ibm.com/infocenter/flexsys/information/topic/com.ibm.acc.cmm.doc/cli_command_led.html.
- From the CMM web interface, select **Compute Nodes** from the **Chassis Management** menu. For more information, see the the IBM Flex System Chassis Management Module: User's Guide at http://pic.dhe.ibm.com/infocenter/flexsys/information/topic/com.ibm.acc.cmm.doc/cmm_user_guide.html. All fields and options are described in the CMM web interface online help.
- For more information about IBM Flex System Manager management software, see the IBM Flex System Manager Software: Installation and Service Guide at http://pic.dhe.ibm.com/infocenter/flexsys/information/topic/com.ibm.acc.8731.doc/product_page.html.

Power button/LED

When the compute node is connected to power through the IBM Flex System chassis, press this button to turn on or turn off the compute node.

Note: The power button works only if local power control is enabled for the compute node. Local power control is enabled and disabled through the CMM **power** command and the CMM web interface.

- For more information about the CMM **power** command, see the IBM Flex System Chassis Management Module: Command-Line Interface Reference Guide at http://pic.dhe.ibm.com/infocenter/flexsys/information/topic/com.ibm.acc.cmm.doc/cli_command_power.html.
- From the CMM web interface, select **Compute Nodes** from the **Chassis Management** menu. For more information, see the the IBM Flex System Chassis Management Module: User's Guide at http://pic.dhe.ibm.com/infocenter/flexsys/information/topic/com.ibm.acc.cmm.doc/cmm_user_guide.html. All fields and options are described in the CMM web interface online help.

After the compute node is removed from the chassis, press and hold this button to activate the system-board LEDs (light path diagnostics). See "Compute node controls, connectors, and LEDs" on page 10 for more information.

This button is also the power LED. This green LED indicates the power status of the compute node:

- **Flashing rapidly**: The LED flashes rapidly for one of the following reasons:
  - The compute node has been installed in a chassis. When you install the compute node, the LED flashes rapidly for up to 90 seconds while the integrated management module II (IMM2) in the compute node is initializing and synchronizing with the Chassis Management Module.
  - Power permissions have not been assigned to the compute node through the Chassis Management Module.
  - The IBM Flex System chassis does not have enough power to turn on the compute node.
  - The IMM2 in the compute node is not communicating with the Chassis Management Module.
- **Flashing slowly**: The compute node is connected to power through the IBM Flex System chassis and is ready to be turned on.
- **Lit continuously**: The compute node is connected to power through the IBM Flex System chassis and is turned on.

When the compute node is on, pressing this button causes an orderly shutdown of the compute node so that it can be removed safely from the chassis. This includes shutting down the operating system (if possible) and removing power from the compute node.

If an operating system is running, you might have to press the button for approximately 4 seconds to initiate the shutdown.

Attention: Pressing the button for 4 seconds forces the operating system to shut down immediately. Data loss is possible.

KVM connector

Connect the console breakout cable to this connector (see "Console breakout cable" for more information).

Note: It is best practice to connect the console breakout cable to only one compute node at a time in each IBM Flex System chassis.

USB connector

Connect a USB device to this connector.

Note: It is best practice to connect a USB device to the front of only one compute node at a time in each IBM Flex System chassis.

Console breakout cable

Use this information for details about the console breakout cable.

Use the console breakout cable to connect external I/O devices to the compute node. The console breakout cable connects through the KVM connector (see "Compute node controls, connectors, and LEDs" on page 10). The console breakout cable has connectors for a display device (video), two USB connectors for a USB keyboard and mouse, and a serial interface connector.

The following illustration identifies the connectors and components on the console breakout cable.

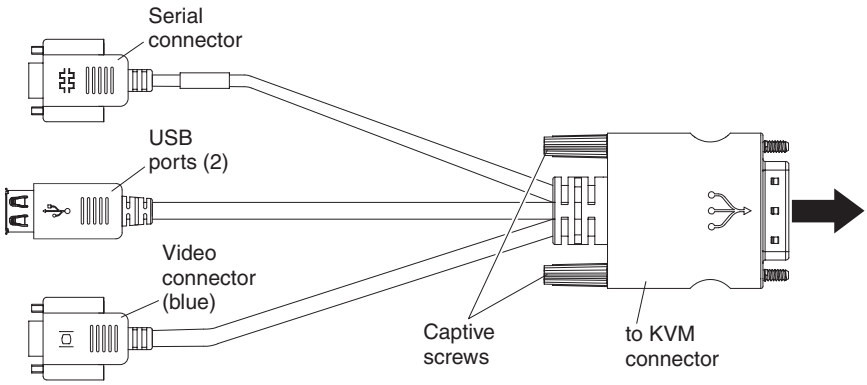

Turning on the compute node

Use this information for details about turning on the compute node.

About this task

After you connect the compute node to power through the IBM Flex System chassis, the compute node can be started in any of the following ways:

- You can press the power button on the front of the compute node (see "Compute node controls, connectors, and LEDs" on page 10) to start the compute node. The power button works only if local power control is enabled for the compute node. Local power control is enabled and disabled through the CMM **power** command and the CMM web interface.
  - For more information about the CMM **power** command, see the IBM Flex System Chassis Management Module: Command-Line Interface Reference Guide at http://pic.dhe.ibm.com/infocenter/flexsys/information/topic/com.ibm.acc.cmm.doc/cli_command_power.html.
  - From the CMM web interface, select **Compute Nodes** from the **Chassis Management** menu. For more information, see the the IBM Flex System Chassis Management Module: User's Guide at http://pic.dhe.ibm.com/infocenter/flexsys/information/topic/com.ibm.acc.cmm.doc/cmm_user_guide.html. All fields and options are described in the CMM web interface online help.

  Notes:

  1. Wait until the power LED on the compute node flashes slowly before you press the power button. While the IMM2 in the compute node is initializing and synchronizing with the Chassis Management Module, the power LED flashes rapidly, and the power button on the compute node does not respond. This process can take approximately 90 seconds after the compute node has been installed.
  2. While the compute node is starting, the power LED on the front of the compute node is lit and does not flash. See "Compute node controls, connectors, and LEDs" on page 10 for the power LED states.
- If a power failure occurs, the IBM Flex System chassis and the compute node can be configured through the CMM **power** command and the CMM web interface to start automatically when power is restored.

  - For more information about the CMM **power** command, see the IBM Flex System Chassis Management Module: Command-Line Interface Reference Guide at http://pic.dhe.ibm.com/infocenter/flexsys/information/topic/com.ibm.acc.cmm.doc/cli_command_power.html.
  - From the CMM web interface, select **Compute Nodes** from the **Chassis Management** menu. For more information, see the the IBM Flex System Chassis Management Module: User's Guide at http://pic.dhe.ibm.com/infocenter/flexsys/information/topic/com.ibm.acc.cmm.doc/cmm_user_guide.html. All fields and options are described in the CMM web interface online help.
- You can turn on the compute node through the CMM **power** command, the CMM web interface, or IBM Flex System Manager management software (if installed).
  - For more information about the CMM **power** command, see the IBM Flex System Chassis Management Module: Command-Line Interface Reference Guide at http://pic.dhe.ibm.com/infocenter/flexsys/information/topic/com.ibm.acc.cmm.doc/cli_command_power.html.
  - From the CMM web interface, select **Compute Nodes** from the **Chassis Management** menu. For more information, see the the IBM Flex System Chassis Management Module: User's Guide at http://pic.dhe.ibm.com/infocenter/flexsys/information/topic/com.ibm.acc.cmm.doc/cmm_user_guide.html. All fields and options are described in the CMM web interface online help.
  - For more information about IBM Flex System Manager management software, see the IBM Flex System Manager Software: Installation and Service Guide at http://pic.dhe.ibm.com/infocenter/flexsys/information/topic/com.ibm.acc.8731.doc/product_page.html.
- You can turn on the compute node through the Wake on LAN feature. The compute node must be connected to power (the power LED is flashing slowly) and must be communicating with the Chassis Management Module. The operating system must support the Wake on LAN feature, and the Wake on LAN feature must be enabled through the Chassis Management Module interface.

Turning off the compute node

Use this information for details about turning off the compute node.

About this task

When you turn off the compute node, it is still connected to power through the IBM Flex System chassis. The compute node can respond to requests from the IMM2, such as a remote request to turn on the compute node. To remove all power from the compute node, you must remove it from the IBM Flex System chassis.

Before you turn off the compute node, shut down the operating system. See the operating-system documentation for information about shutting down the operating system.

The compute node can be turned off in any of the following ways:

- You can press the power button on the compute node (see “Compute node controls, connectors, and LEDs” on page 10). This starts an orderly shutdown of the operating system, if this feature is supported by the operating system.

- If the operating system stops functioning, you can press and hold the power button for more than 4 seconds to turn off the compute node.

  Attention: Pressing the power button for 4 seconds forces the operating system to shut down immediately. Data loss is possible.
- You can turn off the compute node through the CMM **power** command, the CMM web interface, or IBM Flex System Manager management software (if installed).
  - For more information about the CMM **power** command, see the IBM Flex System Chassis Management Module: Command-Line Interface Reference Guide at http://pic.dhe.ibm.com/infocenter/flexsys/information/topic/com.ibm.acc.cmm.doc/cli_command_power.html.
  - From the CMM web interface, select **Compute Nodes** from the **Chassis Management** menu. For more information, see the the IBM Flex System Chassis Management Module: User's Guide at http://pic.dhe.ibm.com/infocenter/flexsys/information/topic/com.ibm.acc.cmm.doc/cmm_user_guide.html. All fields and options are described in the CMM web interface online help.
  - For more information about IBM Flex System Manager management software, see the IBM Flex System Manager Software: Installation and Service Guide at http://pic.dhe.ibm.com/infocenter/flexsys/information/topic/com.ibm.acc.8731.doc/product_page.html.

System-board layouts

Use this information to locate the connectors, LEDs, jumpers, and switches on the system board.

System-board connectors

Use this information to locate compute node system-board components and connectors for optional devices.

The following illustration shows the system-board components, including connectors for user-installable optional devices, in the compute node.

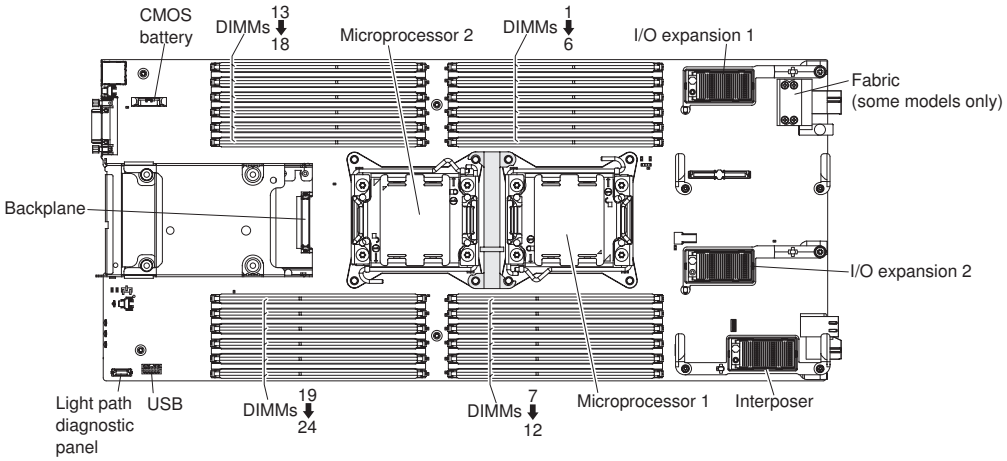

System-board jumpers

Use this information to locate the system-board jumpers.

The following illustration shows the locations of the jumpers on the system board.

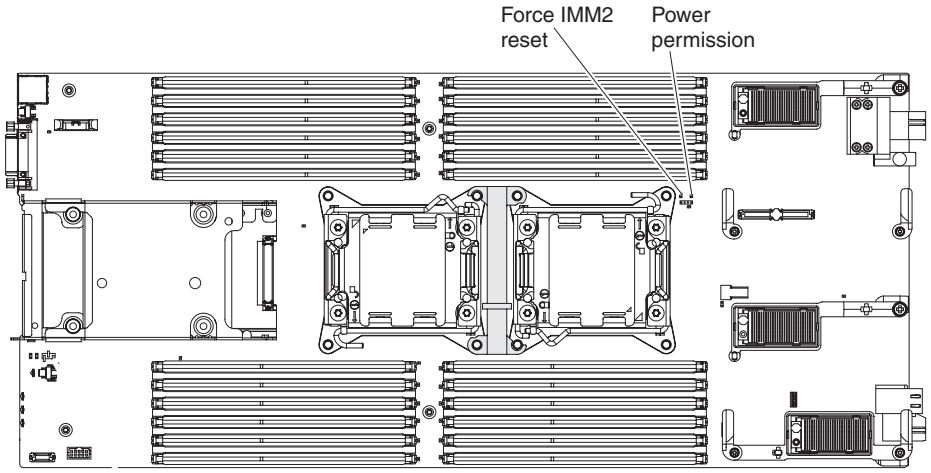

The following table describes the function of each jumper on the system board.

Table 2. System-board jumpers

Jumper name	Description
Force IMM2 reset (J12)	For debug purposes only.
Power permission (J14)	Two-pin jumper block. The default is no jumper. Place a jumper on pins 1 and 2 to force power permission from the IMM2 to the real time management module (RTMM).

System-board LEDs

Use this information to locate the system-board LEDs.

The following illustration shows the locations of the LEDs on the system board.

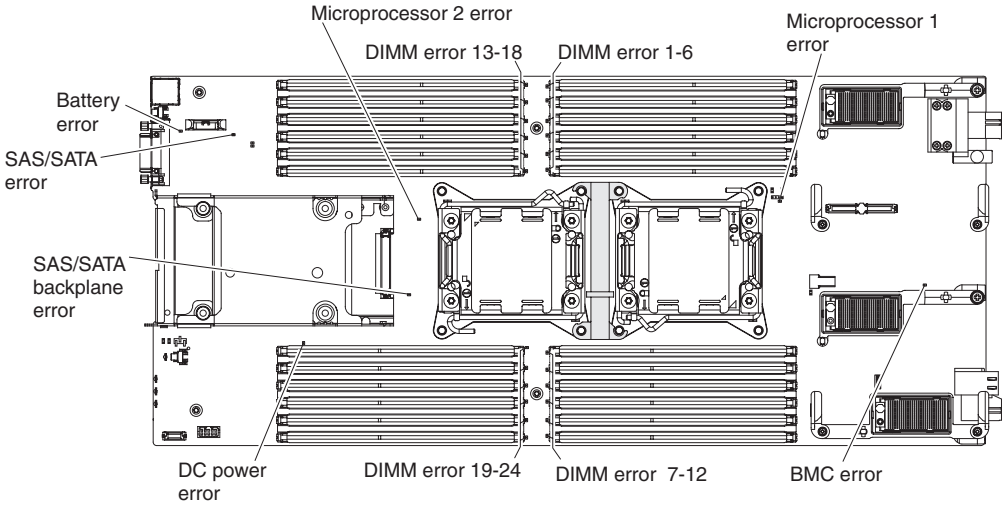

System-board switches

Use this information to locate the system-board switches.

The following illustration shows the location of the switch block on the system board.

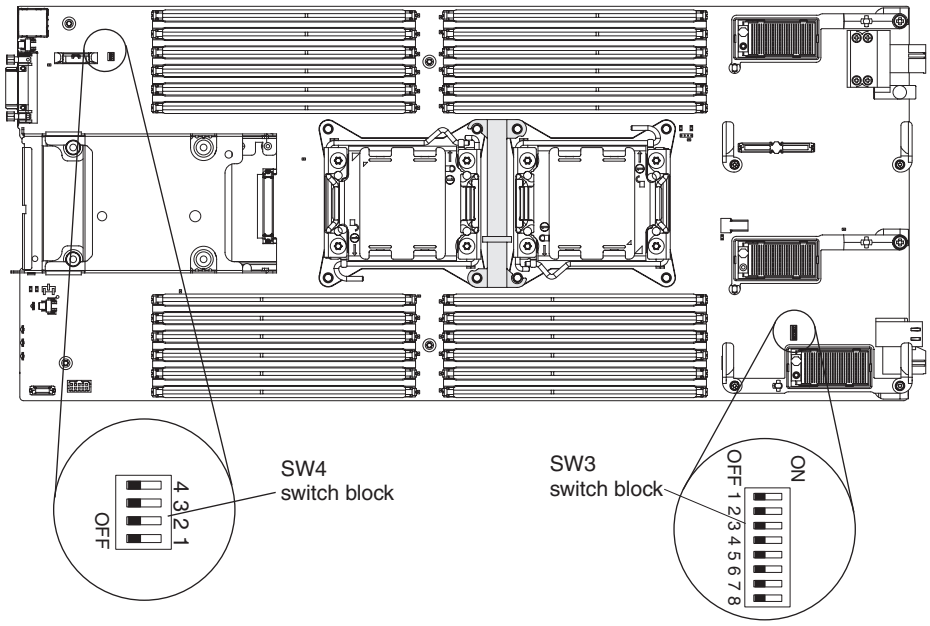

The following table describes the functions of the switches on switch blocks SW3 and SW4.

Table 3. System-board switches

Switch number	Description	Definition
SW3-1	Password override	The default position is Off. Changing this switch to the On position overrides the power-on password.
SW3-2	Trusted Platform Module (TPM) physical presence	The default position is Off. Changing this switch to the On position indicates a physical presence to the TPM.
SW3-3	Real time clock (RTC) reset	The default position is Off. Changing this switch to the On position resets the RTC. A momentary toggle is all that is required. To avoid excessive CMOS battery drain, do not leave this switch in the On position.

Table 3. System-board switches (continued)

Switch number	Description	Definition
SW3-4	Boot backup IMM2	When the switch is in the default Off position, the compute node will boot by using the primary IMM2 firmware. When the switch is in the On position, the compute node will boot by using a backup of the IMM2 firmware.
SW3-5	Boot backup UEFI	The default position is Off. Changing this switch to the On position forces the compute node to boot from the backup UEFI image.
SW3-6	iBMC force update	The default position is Off. Changing this switch to the On position bypasses the operational firmware image and performs a BMC firmware update, if the normal firmware update procedure results in an inoperative BMC. **Note:** Use this jumper only if the normal firmware update procedure fails and the operational firmware image is corrupted. Use of this jumper disables normal baseboard management controller operation.
SW3-7	Wake on LAN (WOL) disable	The default position is Off. Changing this switch to the On position disables WOL.
SW3-8	Real time management module (RTMM) flash bypass	The default position is Off. Changing this switch to the On position forces the compute node to use RTMM ROM instead of flash.
SW4-1	Serial select	The default position is Off (send the serial input output (SIO) to the front serial port). Changing this switch to the On position sends the IMM2 to the serial port.
SW4-2	ME firmware security override	For debug only.
SW4-3	Future use only	
SW4-4	Future use only	

Chapter 2. Configuring

Use this information to update the firmware and use the configuration utilities.

Updating firmware and device drivers

IBM periodically makes UEFI code, IMM2 firmware, diagnostic firmware updates, and device-driver updates available for the compute node. Provisioning is the set of actions that you take to update the firmware and device drivers and install the operating system. Several tools are available to help you update the firmware and device drivers in the provisioning process.

Attention: Installing the wrong firmware or device-driver update might cause the compute node to malfunction. Before you install a firmware or device-driver update, read any readme and change history files that are provided with the downloaded update. These files contain important information about the update and the procedure for installing the update, including any special procedure for updating from an early firmware or device-driver version to the latest version.

Note: Follow the instructions in the readme file that comes with the firmware update.

- **IBM Flex System Manager Update Manager**

  IBM Flex System Manager Update Manager (if installed) acquires, installs, and manages firmware and device driver updates and monitors your compute nodes to ensure that they remain current. For more information about IBM Flex System Manager Update Manager, see http://pic.dhe.ibm.com/infocenter/flexsys/information/topic/com.ibm.acc.8731.doc/updating_firmware_and_software.html.

- **UpdateXpress System Packs**

  UpdateXpress System Packs (UXSP) contain an integration-tested bundle of online, updateable firmware and device drivers for your compute node. The IBM ToolsCenter Bootable Media Creator uses UpdateXpress System Packs to update the firmware and device drivers.

  Typically, use UpdateXpress System Packs to update firmware and devices drivers for a compute node that has previously been provisioned. For more information about UpdateXpress System Packs, see http://www.ibm.com/support/entry/portal/docdisplay?lndocid=SERV-XPRESS.

- **IBM ToolsCenter Bootable Media Creator**

  You can use IBM ToolsCenter Bootable Media Creator to create bootable media that is suitable for applying firmware updates and running preboot diagnostics. Using IBM ToolsCenter Bootable Media Creator, you can create a single bootable image on supported media (such as CD, DVD, ISO image, USB flash drive, or set of PXE files) that bundles multiple IBM Flex System tools and updates from UpdateXpress System Packs, which contain Windows and Linux® firmware updates.

  Typically, use IBM ToolsCenter Bootable Media Creator for the initial setup of a compute node. For more information about the IBM Bootable Media Creator, see http://www.ibm.com/support/entry/portal/docdisplay?lndocid=TOOL-BOMC.

  To provision a compute node with updated firmware and device drivers by using IBM ToolsCenter Bootable Media Creator, complete the following steps:

© Copyright IBM Corp. 2013, 2014

1. Download IBM ToolsCenter Bootable Media Creator to a computer that is connected over the management network to the IBM Flex System Manager management software (if installed) that is managing the compute node.
2. Create the bootable media of firmware and device-driver updates.
3. Connect to the IBM Flex System Manager management software that is managing the IBM Flex System chassis in which the compute node is installed.
4. From IBM Flex System Manager Chassis Manager, select the compute node. In the Actions column, select **Remote Control**.

   Note: The user ID that you use to log in to IBM Flex System Manager management software must have sufficient user permissions to manage the compute node.
5. From the Remote Control session, mount the bootable media (using Remote Media).
6. Start the compute node to boot the media and install the updates.

Important: To avoid problems and to maintain system performance, always make sure that the UEFI code, IMM2 firmware, and diagnostic firmware levels are consistent in all compute nodes in the IBM Flex System chassis.

For additional information about updating firmware and device drivers, see UEFI Compliant Firmware on IBM System x® and BladeCenter® Servers. and the IBM Flex System Quick start guides, and the *Firmware Update Guides* at (an IBM ID is required to access this content).

Recovering a UEFI image

Use this information to recover a UEFI image.

About this task

The compute node has an advanced recovery feature that automatically switches to a backup UEFI page if the UEFI code in the compute node has become damaged, such as from a power failure during an update. The flash memory of the compute node consists of a primary page and a backup page. If the UEFI code in the primary page is damaged, the integrated management module II detects the error and automatically switches to the backup page to start the compute node. If this happens, a POST message `Booted from backup UEFI image` is displayed, the check log LED is lit, and an automatic BIOS recovery (ABR) condition occurs. The backup page version might not be the same as the primary page version. You can then recover or restore the original primary page UEFI.

Note: Changes are made periodically to the IBM website. The actual procedure might vary slightly from what is described in this document.

Procedure

To recover the UEFI code and restore the compute node operation to the primary page, complete the following steps:

1. Update the UEFI code (see “Updating firmware and device drivers” on page 21).
2. Restart the compute node.

3. At the firmware splash screen, press F3 when prompted to restore to the primary bank. The compute node boots from the primary bank.

   Note: The prompt to press F3 is displayed only if the compute node boots from the backup page because of an ABR condition.

What to do next

If the attempt to flash the primary page results in the compute node not booting and the check log LED is not lit, you can manually restore the UEFI code. To manually restore the UEFI code, complete the following steps.

Note: If the check log LED is lit, the compute node is booting from the backup image, and changing the boot backup UEFI switch to the On position changes nothing.

1. Before you begin, read "Safety" on page v and "Installation guidelines" on page 569.
2. Turn off the compute node (see "Turning off the compute node" on page 15).
3. Remove the compute node from the IBM Flex System chassis (see "Removing a compute node from a chassis" on page 571).
4. Remove the cover (see "Removing the compute node cover" on page 575).
5. Locate the boot backup UEFI switch on the switch block and change the switch to the On position (see "System-board switches" on page 18).
6. Replace the cover and reinstall the compute node in the IBM Flex System chassis (see "Installing the compute node cover" on page 577 and "Installing a compute node in a chassis" on page 572).
7. Update the UEFI code (see "Updating firmware and device drivers" on page 21).
8. Turn off the compute node and remove it from the IBM Flex System chassis (see "Turning off the compute node" on page 15 and "Removing a compute node from a chassis" on page 571).
9. Remove the cover of the compute node (see "Removing the compute node cover" on page 575).
10. Locate the boot backup UEFI switch on the switch block and change the switch to the Off position (see "System-board switches" on page 18).
11. Replace the cover and reinstall the compute node in the IBM Flex System chassis (see "Installing the compute node cover" on page 577 and "Installing a compute node in a chassis" on page 572).
12. Restart the compute node (see "Turning on the compute node" on page 14).

Important: If you are unable to manually restore the UEFI code after several attempts, replace the system-board assembly (see "Removing the system-board assembly" on page 631 and "Installing the system-board assembly" on page 633).

Configuring the compute node

Use this information to configure the compute node.

Procedure

To perform a typical initial configuration, complete the following steps.

Note: To configure a compute node, you configure the IP address of the IMM through the CMM web interface. For more information, see the IBM Flex System Chassis Management Module: User's Guide at http://pic.dhe.ibm.com/infocenter/flexsys/information/topic/com.ibm.acc.cmm.doc/cmm_ui_config_chassis_components.html.

1. Configure the Unified Extensible Firmware Interface (UEFI) firmware for the compute node by using the Setup utility (see "Using the Setup utility" on page 25) or the Advanced Setup Utility (ASU) (see http://www.ibm.com/support/entry/portal/docdisplay?lndocid=TOOL-ASU).

   For more information about firmware configuration options, see http://www.ibm.com/support/entry/portal/docdisplay?lndocid=MIGR-5083207.

2. Set the boot protocol by using the Setup utility (see "Setting the boot protocol to boot from legacy devices using the Setup utility" on page 30).

   You can temporarily redefine the boot order by using the Boot Selection menu program (see "Using the Boot Selection Menu program" on page 30).

3. Configure the RAID array.

   You can install up to two hard disk drives in the compute node and implement RAID level-0 (striping) or RAID level-1 (mirroring) arrays in operating systems that are listed on the ServerProven® list at http://www.ibm.com/systems/info/x86servers/serverproven/compat/us. For the compute node, you must configure the RAID by using the LSI Configuration Utility program (see "Using the LSI Logic Configuration Utility" on page 35).

   If an optional RAID expansion adapter is installed, you can use it to control all the hard disk drives that are installed in the compute node. See the documentation that comes with the expansion adapter for information about how to configure the RAID array.

   Important: You must create the RAID array *before* you install the operating system on the compute node.

4. Configure the integrated management module II (IMM2), using the Setup utility or the Advanced Settings Utility (ASU).

5. Update the compute node firmware (see "Updating firmware and device drivers" on page 21).

   Notes:

   a. If you use IBM Flex System Manager Update Manager to update the firmware, you can optionally start the operating-system installation while the firmware updates are installed. It is normal operation for the initial firmware updates to take an unusual length of time.

   b. If the Chassis Management Module (CMM) and the compute nodes are set up to use DHCP and the CMM loses connectivity to the network, the CMM attempts to acquire a new IP address when network connectivity is restored. The compute nodes will not attempt to acquire an IP address again; they will continue to use their original IP addresses. Therefore, if you experience network problems on compute nodes after connectivity between the CMM and the network is restored, you might have to reset the system-management processor in each of the compute nodes in the chassis (including the management node). See "Connectivity problems" on page 543 for more information.

What to do next

After you configure the compute node, you can install the operating system and update device drivers (see Chapter 3, “Installing the operating system,” on page 39 for more information).

Using the Setup utility

Use these instructions to start the Setup utility.

Procedure

You can access the Setup utility remotely through the CMM web interface. From the CMM web interface, select **Launch Compute Node Console**. For more information, see the the IBM Flex System Chassis Management Module: User's Guide at http://pic.dhe.ibm.com/infocenter/flexsys/information/topic/com.ibm.acc.cmm.doc/cmm_user_guide.html. All fields and options are described in the CMM web interface online help.
To start the Setup utility locally, complete the following steps:

1. If the compute node is turned on, turn off the compute node (see “Turning off the compute node” on page 15).
2. If necessary, connect a keyboard, monitor, and mouse to the console breakout cable and connect the console breakout cable to the compute node.
3. Turn on the compute node (see “Turning on the compute node” on page 14).
4. When the prompt `Press <F1> Setup` is displayed, press F1. If you have set an administrator password, you must type the administrator password to access the full Setup utility menu. If you do not type the administrator password, a limited Setup utility menu is available.
5. Follow the instructions on the screen.

Results

The following menu items are on the Setup utility main menu. Depending on the version of the Unified Extensible Firmware Interface (UEFI), some menu items might differ slightly from these descriptions.

- **System Information**

  Select this choice to view information about the compute node. When you make changes through other choices in the Setup utility, some of those changes are reflected in the system information; you cannot change settings directly in the system information. This choice is on the full Setup utility menu only.

  – **System Summary**

    Select this choice to view configuration information, including the ID, speed, and cache size of the microprocessors, machine type and model of the compute node, the serial number, the system Universally Unique Identifier (UUID), and the amount of installed memory.

  – **Product Data**

    Select this choice to view the system-board identifier, the revision level or issue date of the firmware, the integrated management module II and diagnostics code, and the version and date.

  This choice is on the full UEFI Setup utility menu only.

- **System Settings**

  Select this choice to view or change the compute node component settings.

  – **Adapters and UEFI Drivers**

Select this choice to view information about the adapters and UEFI device drivers in the compute node.

Note: Before you configure a UEFI-compatible device, update the firmware for your compute node. See "Updating firmware and device drivers" on page 21 for information about how to update the firmware for your compute node.

To configure a UEFI-compatible expansion adapter, complete the following steps:

1. Select **Please refresh this page first** and press Enter.
2. Select the device driver that you want to configure, and press Enter.
3. When you have finished changing settings, press Esc to exit from the program; select **Save** to save the settings that you have changed.

– **Processors**

Select this choice to view or change the microprocessor settings.

– **Memory**

Select this choice to view or change the memory settings.

If a memory error is detected during POST or memory configuration, the compute node automatically disables the failing pair of memory connectors and continues operating with reduced memory. After the problem is corrected, you must manually enable the memory connectors. Select **System Memory Details** and use the arrow keys to highlight the pair of memory connectors that you want to enable; then, set the connectors to **Enable**.

– **Devices and I/O Ports**

Select this choice to view or change assignments for devices and input/output (I/O) ports. You can configure the remote console redirection and enable or disable integrated Ethernet controllers. If you disable a device, it cannot be configured, and the operating system cannot detect it (disabling a device is equivalent to disconnecting the device).

You can also choose to enable or disable adapter option ROM support. Disabling support can potentially improve the time it takes the compute node to start.

– **Power**

Select this choice to view or change the power scheme settings.

– **Operating Modes**

Select this choice to determine operational settings, such as operating mode (acoustic, efficiency, or performance) and memory speed.

– **Legacy Support**

Select this choice to view or set legacy support.

- **Force Legacy Video on Boot**

  Select this choice to enable or disable force INT video support, if the operating system does not support UEFI video output standards. The default is **Enable**.

- **Rehook INT**

  Select this choice to enable or disable devices from taking control of the boot process. The default is **Disable**.

- **Legacy Thunk Support**

  Select this choice to enable or disable UEFI to interact with PCI mass storage devices that are not UEFI compliant. The default is **Enable**.

- **Infinite Boot Retry**

Select this choice to enable or disable UEFI to infinitely retry the legacy boot order.

- **Non-Planar PXE**

  Select this choice to enable or disable non-system-board PXE for legacy mode.

– **System Security**

  Select this choice to view or change the security options for Trusted Platform Module (TPM).

– **Integrated Management Module**

  Select this choice to view or change the settings for the integrated management module II (IMM2).

  - **Commands on USB Interface**

    Select this choice to specify whether the Ethernet over USB interface is enabled or disabled.

    Note: This option is primarily for older operating systems that have problems with USB communications device class (CDC) Ethernet interfaces. Disabling this option will cause the following issues:

    • Online update packages will not work.
    • Updates that use Bootable Media Creator (BoMC) will not work because BoMC uses the LAN over USB interface.
    • You must install the IPMI device driver to use the Advanced Settings Utility (ASU) to change the IMM2 or UEFI configuration.
    • You cannot set the IMM2 OS loader watchdog.

  - **Network Configuration**

    Select this choice to view the system-management network interface port, IMM2 MAC address, current IMM2 IP address, and host name; define the static IMM2 IP address, subnet mask, and gateway address; specify whether to use the static IP address or have DHCP assign the IMM2 IP address; save the network changes; and reset the IMM2.

  - **Reset IMM to Defaults**

    Select this choice to restore the IMM2 to the manufacturing default settings. The IMM2 controller restarts after you restore the settings.

  - **Reset IMM**

    Select this choice to restart the IMM2 controller.

– **Recovery**

  Select this choice to view or change the system recovery parameters.

  - **POST Attempts**

    Select this choice to define the number of times to attempt POST before invoking the recovery procedures. For more information, see “Nx boot failure” on page 29.

  - **System Recovery**

    Select this choice to configure the recovery settings.

    • **POST Watchdog Timer**

      Select this choice to view or enable the POST watchdog timer.

    • **POST Watchdog Timer Value**

      Select this choice to view or set the POST loader watchdog timer value.

    • **Reboot System on NMI**

Select this choice to enable or disable restarting the system whenever a nonmaskable interrupt (NMI) occurs. The default is **Disable**.

  - **Storage**

    Select this choice to view or change the storage device settings.

  - **Network**

    Select this choice to view or change the network device options, such as iSCSI.

  - **Driver Health**

    Select this choice to view the health status of the controllers as reported by the device drivers. You can select to perform a repair action on a device driver.

- **Date and Time**

  Select this choice to set the date and time for the compute node. The date is set in *month/day/year* format. The time is set in 24-hour format (*hour*:*minute*:*second*).

  This choice is on the full UEFI Setup utility menu only.

- **Start Options**

  Select this choice to view or change the startup sequence. The startup sequence specifies the order in which the compute node checks devices to find a boot record. The compute node starts from the first boot record that it finds. If the compute node has Wake on LAN hardware and software and the operating system supports Wake on LAN functions, you can specify a startup sequence for the Wake on LAN functions. For example, you can define a startup sequence that checks for a disc in the CD or DVD drive, then checks the hard disk drive, and then checks a network adapter.

  This choice is on the full UEFI Setup utility menu only.

- **Boot Manager**

  Select this choice to view, add, delete, or change the device boot priority, boot from a file, select a one-time boot, or reset the boot order to the default setting.

  Select **Boot Modes** to view or change the boot settings. You can set the boot mode and choose UEFI operating-system support only, legacy operating-system support only, or UEFI and legacy operating-system support.

  Note: If you select the legacy-only boot mode (which makes boot time much faster), you will not be able to activate any Features on Demand (FoD) keys.

- **System Event Logs**

  Select this choice to access the System Event Manager, where you can view the POST event log and the system-event log.

  The POST event log contains the three most recent error codes and messages that were generated during POST.

  The system-event log contains POST and system management interrupt (SMI) events and all events that are generated by the baseboard management controller that is embedded in the integrated management module II.

  Important: If the system-error LED on the front of the compute node is lit but there are no other error indications, clear the system-event log. Also, after you complete a repair or correct an error, clear the system-event log to turn off the system-error LED on the front of the compute node.

  - **POST Event Viewer**

    Select this choice to enter the POST event viewer to view the UEFI diagnostic codes.

  - **System Event Log**

Select this choice to view the system-event log.

– **Clear System Event Log**

Select this choice to clear the system-event log.

- **User Security**

  Select this choice to set, change, or clear passwords.

  You can set, change, and delete a power-on password and an administrator password through this selection. If you set a power-on password, you must type the power-on password to complete the system startup and to have access to the Configuration/Setup utility menu.

  You can use any combination of up to from 6 to 20 characters (A - Z, a - z, and 0 - 9) for passwords. Keep a record of your password in a secure place.

  If you forget the power-on password, you can regain access to the compute node by using the power-on password override switch (see "System-board switches" on page 18).

  Attention: If you set an administrator password and then forget it, there is no way to change, override, or remove it. You must replace the system board.

  You can also regain access to the compute node by removing the CMOS battery and then reinstalling it (see "Removing the CMOS battery" on page 587 and "Installing the CMOS battery" on page 588).

  Important: Removing the CMOS battery clears the settings in CMOS memory.

- **Save Settings**

  Select this choice to save the changes that you have made in the settings.

- **Restore Settings**

  Select this choice to cancel the changes that you have made in the settings and restore the previous settings.

- **Load Default Settings**

  Select this choice to cancel the changes that you have made in the settings and restore the manufacturing default settings.

- **Exit Setup**

  Select this choice to exit from the Setup utility. If you have not saved the changes that you have made in the settings, you are asked whether you want to save the changes or exit without saving them.

Nx boot failure

Configuration changes, such as added devices or adapter firmware updates, and firmware or application code problems can cause the compute node to fail the power-on self-test (POST).

If the compute node fails POST, it responds in either of the following ways:

- The compute node restarts automatically and attempts POST again.
- The compute node hangs and you must manually restart the compute node for the compute node to attempt POST again.

After a specified number of consecutive attempts (automatic or manual), the Nx boot failure feature causes the compute node to revert to the default UEFI configuration and start the Setup utility, so that you can make the necessary corrections to the configuration and restart the compute node. If the compute node is unable to successfully complete POST with the default configuration, there might be a problem with the system board.

To specify the number of consecutive restart attempts that will trigger the Nx boot failure feature in the Setup utility, click **System Settings** > **Recovery** > **Post Attempts**. The available options are 3, 6, 9 and Disable.

Setting the boot protocol to boot from legacy devices using the Setup utility

To use the Setup utility to configure the boot protocol to boot from a non-UEFI legacy network device for all PXE boot attempts, complete the following steps:

Note: This option disables UEFI ROMs from loading and enables the compute node to boot in legacy mode only.

1. Connect a keyboard, monitor, and mouse to the console breakout cable and connect the console breakout cable to the compute node.
2. Turn on the compute node (see "Turning on the compute node" on page 14).
3. When the prompt `Press <F1> Setup` is displayed, press F1. If you have set an administrator password, you must type the administrator password to access the full Setup utility menu. If you do not type the administrator password, a limited Setup utility menu is available.
4. From the Setup utility main menu, select **Boot Manager**.
5. Select **Boot Modes**; then select **Legacy Only**.
6. Press Esc twice to return to the Boot Manager menu.
7. Select **Change Boot Order** and move the non-UEFI legacy network device to the top of the boot order.
8. Press Esc twice to return to the Setup utility main menu.
9. Select **Save Settings** and then select **Exit Setup**.

To use the Setup utility to configure the boot protocol to boot from a non-UEFI legacy network device for the next boot only, complete the following steps:

1. Connect a keyboard, monitor, and mouse to the console breakout cable and connect the console breakout cable to the compute node.
2. Turn on the compute node (see "Turning on the compute node" on page 14).
3. When the prompt `Press <F1> Setup` is displayed, press F1. If you have set an administrator password, you must type the administrator password to access the full Setup utility menu. If you do not type the administrator password, a limited Setup utility menu is available.
4. From the Setup utility main menu, select **Boot Manager**.
5. Select **Add Boot Option**; then select **Generic Boot Option**.
6. Select **Legacy Only**.
7. Press Esc three times to return to the Setup utility main menu.
8. Select **Save Settings** and then select **Exit Setup**.

Using the Boot Selection Menu program

The Boot Selection Menu program is a built-in, menu-driven configuration utility program that you can use to temporarily redefine the first startup device without changing settings in the Setup utility.

Procedure

To use the Boot Selection Menu program, complete the following steps:

1. Connect a keyboard, monitor, and mouse to the console breakout cable, and connect the console breakout cable to the compute node.
2. Turn on the compute node (see "Turning on the compute node" on page 14).
3. Press F12 (**Select Boot Device**). If a bootable USB mass storage device is installed, a submenu item (**USB Key/Disk**) is displayed.
4. Use the Up Arrow and Down Arrow keys to select an item from the Boot Selection Menu and press **Enter**.

Results

The next time the compute node starts, it returns to the startup sequence that is set in the Setup utility.

Updating the Universally Unique Identifier (UUID) and DMI/SMBIOS data with vital product data

After the system board is replaced, you must update the Universally Unique Identifier (UUID) and DMI/SMBIOS data with vital product data (VPD).

You can use the Advanced Settings Utility (ASU) and any of the following access methods:
- Locally (in-band)
  - Through the Keyboard Controller Style (KCS) interface
  - Through the LAN over USB interface
- Remotely over a LAN

You can use the ASU under any supported operating system, or you can use the Bootable Media Creator or a Windows- or Linux-based toolkit to create Windows Professional Edition or Master Control Program (MCP) bootable media that contains the ASU. For information about the ASU and instructions for downloading and unpacking the ASU code, see http://www.ibm.com/support/entry/portal/docdisplay?lndocid=TOOL-ASU and the *Advanced Settings Utility User's Guide*.

The following sections provide instructions for updating the UUID and DMI/SMBIOS data, using the different methods for accessing the IMM2. The following conventions apply to the command syntax:
- Variables are shown in *italics*.
- Optional parameters are enclosed in brackets ([ ]). Do not type the brackets in the commands. If you omit an optional parameter, the default is used.
- Although the command syntax is shown in mixed case, the commands are not case sensitive.

Locally: Keyboard Controller Style (KCS)

This access method uses the IPMI/KCS interface. The IPMI driver must be installed; with some operating systems, the IPMI driver is installed by default. The ASU provides the corresponding mapping layer.

Procedure

To update the UUID, in the ASU command-line interface, enter the following command:

```
asu set SYSTEM_PROD_DATA.SysInfoUUID uuid
```

where *uuid* is the user-assigned hexadecimal value, up to 16 bytes, that identifies the compute node.
To update the DMI/SMBIOS data, complete the following steps:

1. In the ASU command-line interface, enter the following command:

   ```
   asu set SYSTEM_PROD_DATA.SysInfoProdName xxxxyyy
   ```

   Important: The default machine type and model number in the system-board firmware might not be the machine type and model number of the compute node. Make sure that you enter the correct machine type and model number.

   where:

   xxxx is the 4-digit machine type of the compute node.

   yyy is the 3-digit model number of the compute node.
2. Enter the following command:

   ```
   asu set SYSTEM_PROD_DATA.SysInfoSerialNum zzzzzzz
   ```

   where *zzzzzzz* is the 7-character serial number of the compute node.
3. Enter the following command:

   ```
   asu set SYSTEM_PROD_DATA.SysEncloseAssetTag
        aaaaaaaaaaaaaaaaaaaaaaaaaaaaaaaaa
   ```

   where *aaaaaaaaaaaaaaaaaaaaaaaaaaaaaaaaa* is the 33-character asset tag number of the compute node.

Locally: LAN over USB

If you omit any optional parameter, the default value is used. If one or more default values are used and the ASU cannot access the IMM2 by using the LAN over USB access method, the ASU automatically uses the KCS access method.

Procedure

To update the UUID, in the ASU command-line interface, enter the following command:

```
asu set SYSTEM_PROD_DATA.SysInfoUUID uuid
     [--user userid][--password password]
```

where:

uuid is the user-assigned hexadecimal value, up to 16 bytes, that identifies the compute node.

userid is the IMM2 account name (1 of 12 accounts). The default is USERID.

password
is the IMM2 account password (1 of 12 accounts). The default is PASSW0RD (with a zero, not the letter O).

To update the DMI/SMBIOS data, complete the following steps:

1. In the ASU command-line interface, enter the following command:

   ```
   asu set SYSTEM_PROD_DATA.SysInfoProdName xxxxyyy
        [--user userid][--password password]
   ```

Important: The default machine type and model number in the system-board firmware might not be the machine type and model number of the compute node. Make sure that you enter the correct machine type and model number.

where:

xxxx is the 4-digit machine type of the compute node.

yyy is the 3-digit model number of the compute node.

userid is the IMM2 account name (1 of 12 accounts). The default is USERID.

password
is the IMM2 account password (1 of 12 accounts). The default is PASSW0RD (with a zero, not the letter O).

2. Enter the following command:

```
asu set SYSTEM_PROD_DATA.SysInfoSerialNum zzzzzzz
     [--user userid][--password password]
```

where *zzzzzzz* is the 7-character serial number of the compute node.

3. Enter the following command:

```
asu set SYSTEM_PROD_DATA.SysEncloseAssetTag
     aaaaaaaaaaaaaaaaaaaaaaaaaaaaaaaaa
     [--user userid][--password password]
```

where *aaaaaaaaaaaaaaaaaaaaaaaaaaaaaaaaa* is the 33-character asset tag number of the compute node.

Remotely over a LAN

If you omit any optional parameter, the default value is used.

Procedure

To update the UUID, in the ASU command-line interface, enter the following command:

```
asu set SYSTEM_PROD_DATA.SysInfoUUID uuid --host ipaddress
     [--user userid][--password password]
```

where:

uuid is the user-assigned hexadecimal value, up to 16 bytes, that identifies the compute node.

ipaddress
is the external LAN IP address of the IMM2.

userid is the IMM2 account name (1 of 12 accounts). The default is USERID.

password
is the IMM2 account password (1 of 12 accounts). The default is PASSW0RD (with a zero, not the letter O).

To update the DMI/SMBIOS data, complete the following steps:

1. In the ASU command-line interface, enter the following command:

```
asu set SYSTEM_PROD_DATA.SysInfoProdName xxxxyyy --host ipaddress
     [--user userid][--password password]
```

Important: The default machine type and model number in the system-board firmware might not be the machine type and model number of the compute node. Make sure that you enter the correct machine type and model number.

where:

xxxx is the 4-digit machine type of the compute node.

yyy is the 3-digit model number of the compute node.

ipaddress
is the external LAN IP address of the IMM2.

userid is the IMM2 account name (1 of 12 accounts). The default is USERID.

password
is the IMM2 account password (1 or 12 accounts). The default is PASSW0RD (with a zero, not the letter O).

2. Enter the following command:

```
asu set SYSTEM_PROD_DATA.SysInfoSerialNum zzzzzzz --host ipaddress
     [--user userid][--password password]
```

where zzzzzzz is the 7-character serial number of the compute node.

3. Enter the following command:

```
asu set SYSTEM_PROD_DATA.SysEncloseAssetTag
     aaaaaaaaaaaaaaaaaaaaaaaaaaaaaaaaa --host ipaddress
     [--user userid][--password password]
```

where *aaaaaaaaaaaaaaaaaaaaaaaaaaaaaaaaa* is the 33-character asset tag number of the compute node.

Configuring a RAID array

Use this information to configure a RAID array.

About this task

Configuring a RAID array applies only to a compute node in which two or more hard disk drives are installed.

Note: When you configure a RAID array, the hard disk drives must use the same type of interface and must have identical capacity and speed.

You can use two hard disk drives in the compute node to implement and manage RAID level-0 (striping) or RAID level-1 (mirror) arrays in operating systems that are listed on the ServerProven list at http://www.ibm.com/systems/info/x86servers/serverproven/compat/us. For the compute node, you must configure the RAID by using the LSI Configuration Utility program.

If an optional RAID expansion adapter is installed, you can use it to control all of the hard disk drives that are installed in the compute node. See the documentation that comes with the expansion adapter for information about how to configure the RAID array.

Important: You must create the RAID array *before* you install the operating system on the compute node.

You can use the LSI Logic Configuration Utility program to configure the hard disk drives and the SAS controller. To start the LSI Logic Configuration Utility, see

"Using the LSI Logic Configuration Utility."

Using the LSI Logic Configuration Utility

Use these instructions to start the LSI Logic Configuration Utility.

About this task

You can use the LSI Logic Configuration Utility to perform the following tasks:

- Set the device boot order
- Add or remove devices from the boot list
- Manage the RAID configuration

Note: The hard disk drives in the RAID configuration must use the same type of interface and must have identical capacity and speed.

Procedure

To start the LSI Logic Configuration Utility, complete the following steps:

1. Connect a keyboard, monitor, and mouse to the console breakout cable and connect the console breakout cable to the compute node.
2. Turn on the compute node (see "Turning on the compute node" on page 14).
3. When the prompt `Press <F1> Setup` is displayed, press F1. If you have set an administrator password, you must type the administrator password to access the full Setup utility menu. If you do not type the administrator password, a limited Setup utility menu is available.
4. From the Setup utility main menu, select **System Settings**; then select **Storage**.
5. Use the arrow keys to select the controller from the list of adapters; then, press Enter.
6. Follow the instructions on the screen to change the settings of the selected items; then, press Enter. If you select **SAS Topology** or **Advanced Adapter Properties**, additional screens are displayed.

Features on Demand

This topic provides information about Features on Demand.

Features on Demand provides optional software that is available for the compute node and other IBM Flex System resources. Features on Demand provides a convenient way for you to activate optional software through the IBM Flex System Manager management software (if installed), the IMM2 interface, or the CMM web interface. Any Features on Demand software that you ordered with your compute node is preactivated and does not require manual activation.

If you did not order Features on Demand software when you ordered the compute node, you can purchase Features on Demand as you would any other optional software or hardware. Instructions for obtaining an activation key are provided with your purchase of a Features on Demand authorization code.

For information about Features on Demand, see http://www.ibm.com/systems/x/fod/.

Important:

1. If the compute node is configured in the Setup utility to boot in legacy mode, you must leave UEFI option ROM initialization enabled for devices for which Features on Demand feature keys are installed.
2. After you install an activation key for the first time, you might have to restart the compute node for the Feature on Demand to become active. See the documentation that comes with the software for specific activation instructions.
3. Make sure that the UEFI code, IMM2 firmware, and all other firmware in the compute node is at the level that supports the Feature on Demand software.

Setting up the LAN-on-motherboard (LOM) feature

This topic provides information about setting up the LAN-on-motherboard (LOM) feature.

Some models of the IBM Flex System x240 Compute Node Types 7863, 8737, 8738, and 8956 have an Ethernet LAN-on-motherboard (LOM) controller integrated on the system board. The LOM provides the following features:

- Two operational mode choices:
  - One-port physical NIC mode (pNIC), multichannel disabled, which is the default.
  - Virtual NIC mode (vNIC), multichannel enabled. vNIC mode enables up to 4 virtual NIC interfaces per 10 Gb physical port (8 total for the LOM).

  For more information about how LOM ports are mapped to switch modules in the chassis, see http://pic.dhe.ibm.com/infocenter/flexsys/information/topic/com.ibm.acc.8721.doc/configuring_io_modules.html.
- Two options for vNIC linking:
  - VNIC1, IBM Virtual Fabric mode.
  - VNIC2, Switch Independent mode.

  You can select these options using the Setup utility (F1).
- Link auto negotiation 10 Gb/1 Gb full duplex.
- Bus-mastering support.
- Direct memory access (DMA) support.
- Interoperability with existing FC SAN infrastructures, such as switches, arrays, SRM tools (including Emulex utilities), SAN practices, and other infrastructures.
- Unified Ethernet-to-FC SAN connectivity provided by an FCoE switch.
- 10 Gb MAC features such as MSI-X support, jumbo frames (8 KB) support, VLAN tagging (802.1Q, PER priority pause/priority flow control), and advanced packet filtering.
- NIC failover support.
- Support for IBM Fabric Manager (IFM).
- Preboot Execution Environment, UEFI, and Legacy PXE.
- Wake on LAN (WOL).
- SRIOV support.
- ISCSI or FCoE capabilities, which can be enabled through IBM Features on Demand. When enabled, the ISCSI or FCoE operations are supported on the second vNIC of the physical port.

Separate NIC, ISCSI, and FCoE drivers are provided to support all configurations. To obtain the device drivers, go to http://www.emulex.com/downloads/ibm/vfa-software-kits.html.

No host operating system changes are required for you to use the LOM features. NIC and HBA functionality (including device management, utilities, and other functions) are transparent to the host operating system.

For more information about using the LOM feature, go to http://www.emulex.com/support.html.

Chapter 3. Installing the operating system

Use these instructions to install the operating system on the compute node.

To determine which operating systems are supported, see http://www.ibm.com/systems/info/x86servers/serverproven/compat/us.

Provisioning is the set of actions that you take to install the operating system. To install the operating system on a compute node, you can use any of the following methods:

- **IBM *ServerGuide Setup and Installation* CD**

  Use the *ServerGuide Setup and Installation* CD to install a supported Microsoft Windows operating system only. To provision a compute node with an operating system by using the *ServerGuide Setup and Installation* CD, complete the following steps:

  1. Download the *ServerGuide Setup and Installation* CD ISO image to a computer that is connected over the management network to the IBM Flex System Manager management software (if installed) that is managing the compute node.
  2. Connect to the IBM Flex System Manager management software that is managing the IBM Flex System chassis in which the compute node is installed.
  3. From IBM Flex System Manager Chassis Manager, select the compute node. In the Actions column, select **Remote Control**.

     Note: The user ID that you use to log in to IBM Flex System Manager management software must have sufficient user permissions to manage the compute node.
  4. From the Remote Control session, mount the *ServerGuide Setup and Installation* CD bootable media (using Remote Media). When the ServerGuide program prompts you to mount the operating-system image, unmount the *ServerGuide Setup and Installation* CD and mount the operating-system image.

     You can also install an ISO image of the operating system from an external or portable storage device, such as a USB device, by using Remote Media. For more information, see http://pic.dhe.ibm.com/infocenter/flexsys/information/topic/com.ibm.acc.8731.doc/remote_control_installing_an_operating_system_on_an_x-architecture_compute_node.html.
  5. Start the compute node to boot the media and install the operating system.

- **IBM ToolsCenter Bootable Media Creator**

  Use IBM ToolsCenter Bootable Media Creator to create an IBM *ServerGuide Setup and Installation* CD for deploying Windows operating systems and updates from UpdateXpress System Packs. For more information about the IBM Bootable Media Creator, see http://www.ibm.com/support/entry/portal/docdisplay?lndocid=TOOL-BOMC.

  To provision a compute node with an operating system by using IBM ToolsCenter Bootable Media Creator, complete the following steps:

  1. Download IBM ToolsCenter Bootable Media Creator to a computer that is connected over the management network to the IBM Flex System Manager management software (if installed) that is managing the compute node.

© Copyright IBM Corp. 2013, 2014

2. Connect to the IBM Flex System Manager management software that is managing the IBM Flex System chassis in which the compute node is installed.
3. From IBM Flex System Manager Chassis Manager, select the compute node. In the Actions column, select **Remote Control**.

   Note: The user ID that you use to log in to IBM Flex System Manager management software must have sufficient user permissions to manage the compute node.
4. From the Remote Control session, mount the *ServerGuide Setup and Installation* CD bootable media (using Remote Media). When the ServerGuide program prompts you to mount the operating-system image, unmount the *ServerGuide Setup and Installation* CD and mount the operating-system image.

   You can also install an ISO image of the operating system from an external or portable storage device, such as a USB device, by using Remote Media. For more information, see http://pic.dhe.ibm.com/infocenter/flexsys/information/topic/com.ibm.acc.8731.doc/remote_control_installing_an_operating_system_on_an_x-architecture_compute_node.html.
5. Start the compute node to boot the media and install the operating system.

- **IBM Flex System Manager management software**

  You can use IBM Flex System Manager management software (if installed) to deploy operating system and virtual images to multiple compute nodes that do not already have an operating system installed. This function is limited to deploying VMware ESXi and RHEL Kernel-based Virtual Machine (KVM) hypervisors to X-Architecture compute nodes. For more information, see http://pic.dhe.ibm.com/infocenter/flexsys/information/topic/com.ibm.acc.8731.doc/provisioning_a_blade_server_from_the_frm.html.
- **IBM ServerGuide Scripting Toolkit**

  The ServerGuide Scripting Toolkit is a collection of system-configuration tools and installation scripts that you can use to deploy software to your compute node in a repeatable, predictable manner (see "Using IBM ServerGuide Scripting Toolkit" on page 42).
- **Operating-system installation instructions**

  Download the latest operating-system installation instructions and install the operating system.

Important: The operating system in the compute node must provide USB support for the compute node to recognize and use the keyboard, mouse, and removable-media drives.

Using the ServerGuide Setup and Installation CD

The *ServerGuide Setup and Installation* CD provides software setup tools and installation tools that are designed for your compute node. The ServerGuide program detects the compute node model and optional hardware devices that are installed and uses that information during setup to configure the hardware. The ServerGuide program simplifies operating-system installations by providing updated device drivers and, in some cases, installing them automatically.

You can download a free image of the *ServerGuide Setup and Installation* CD from http://www.ibm.com/support/entry/portal/docdisplay?lndocid=SERV-GUIDE.

In addition to the *ServerGuide Setup and Installation* CD, you must have your operating-system CD to install the operating system.

ServerGuide features

This information provides an overview of the ServerGuide features.

Features and functions can vary slightly with different versions of the ServerGuide program. To learn more about the version that you have, start the *ServerGuide Setup and Installation* CD and view the online overview. Not all features are supported on all compute node models.

The ServerGuide program has the following features:

- An easy-to-use interface
- Diskette-free setup, and configuration programs that are based on detected hardware
- Device drivers that are provided for the compute node model and detected hardware
- Operating-system partition size and file-system type that are selectable during setup

The ServerGuide program performs the following tasks:

- Sets system date and time
- Detects installed optional hardware devices and provides updated device drivers for most adapters and devices
- Provides diskette-free installation for supported Windows operating systems
- Includes an online readme file with links to tips for hardware and operating-system installation

Typical operating-system installation

This topic provides information about a typical ServerGuide operating-system installation.

The ServerGuide program can reduce the time it takes to install an operating system. It provides the device drivers that are required for your hardware and for the operating system that you are installing. This section describes a typical ServerGuide operating-system installation.

Note: Features and functions can vary slightly with different versions of the ServerGuide program.

1. After you have completed the setup process, the operating-system installation program starts. (You will need your operating-system CD to complete the installation.)
2. The ServerGuide program stores information about the compute node model, IMM2, hard disk drive controllers, and network adapters. Then, the program checks the CD for newer device drivers. This information is stored and then passed to the operating-system installation program.
3. The ServerGuide program presents operating-system partition options that are based on your operating-system selection and the installed hard disk drives.
4. The ServerGuide program prompts you to insert your operating-system CD and restart the compute node. At this point, the installation program for the operating system takes control to complete the installation.

Installing the operating system without using ServerGuide

Use this information to install the operating system on the compute node without using ServerGuide.

About this task

If you have already configured the compute node hardware and you are not using the ServerGuide program to install your operating system, you can download operating-system installation instructions for the compute node from http://www.ibm.com/supportportal.

Using IBM ServerGuide Scripting Toolkit

The ServerGuide Scripting Toolkit is a collection of system-configuration tools and installation scripts that you can use to deploy software to your IBM Flex System compute node in a repeatable, predictable manner. When the ServerGuide Scripting Toolkit is used with IBM ServerGuide, it provides a total solution for deploying IBM Flex System compute nodes in an unattended mode.

For more information about using the IBM ServerGuide Scripting Toolkit, see http://www.ibm.com/support/entry/portal/docdisplay?lndocid=TOOL-CENTER.

Chapter 4. Accessing the IMM2

Use this information to access the IMM2 remotely using the command-line interface, serial over LAN, or web interface; or locally through the LAN over USB interface.

The integrated management module II (IMM2) is a second generation hardware control device that provides enhanced systems-management processor functions, video controller, and remote presence function in a single chip.

For more information about the IMM2, see http://www.ibm.com/support/entry/portal/docdisplay?lndocid=MIGR-5086346.

Accessing the IMM2 remotely

This topic provides information about the remote systems-management capabilities.

The integrated management module II (IMM2) provides the following remote systems-management capabilities:

- **Command-line interface**

  The command-line interface provides direct access to systems-management functions through the IPMI 2.0 protocol. Use the command-line interface to issue commands to control the compute node power, view system information, and identify the compute node. You can also save one or more commands as a text file and run the file as a script.

  For more information about the command-line interface, see http://www.ibm.com/support/entry/portal/docdisplay?lndocid=MIGR-5086346.

  Note: Remote IPMI and SNMP are disabled by default. To get IPMI access so that CMM can manage IPMI/SNMP, create a local IMM user account (separate from the CMM accounts). When this local account is created, the IPMI and SNMP ports are automatically opened.

- **Serial over LAN**

  Establish a Serial over LAN (SOL) connection to manage compute nodes from a remote location. You can remotely view and change the UEFI settings, restart the compute node, identify the compute node, and perform other management functions. Any standard Telnet client application can access the SOL connection.

  See your operating-system documentation for information about SOL commands that you can enter by using the command-line interface.

- **Web interface**

  Use the secure IMM2 web interface to perform systems-management activities within a web browser. For information about accessing the web interface, see “Logging on to the IMM2 web interface” on page 44.

Viewing the network access tag

Use this information to locate the IP address by viewing the network access tag, or by using the Setup utility or systems-management software.

© Copyright IBM Corp. 2013, 2014

To access the web interface, you need the IP address of the IMM2. You can locate the IP address by viewing the network access tag. The network access tag is attached to the front of the compute node. The front of the network access tag lists the first four IMM MAC addresses in the lower-right corner, as shown in the following illustration.

Front

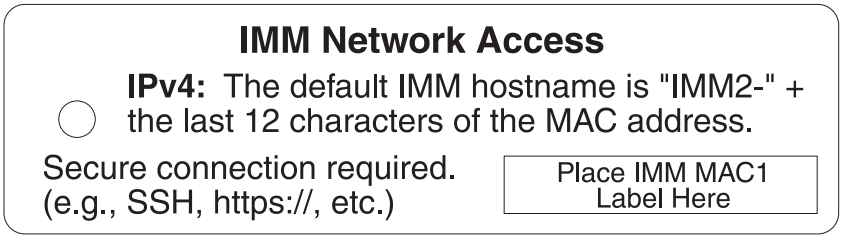

The rear of the network access tag lists the IPv6 link local address (LLA), as shown in the following illustration.

Rear

The MAC address is also available through the Setup utility, the CMM **cinstatus** command, and the CMM web interface.

- For more information about the Setup utility, see "Using the Setup utility" on page 25.
- For more information about the CMM **cinstatus** command, see the IBM Flex System Chassis Management Module: Command-Line Interface Reference Guide at http://pic.dhe.ibm.com/infocenter/flexsys/information/topic/com.ibm.acc.cmm.doc/cli_command_cinstatus.html.
- From the CMM web interface, select **Compute Nodes** from the Chassis Management menu. For more information, see the the IBM Flex System Chassis Management Module: User's Guide at http://pic.dhe.ibm.com/infocenter/flexsys/information/topic/com.ibm.acc.cmm.doc/cmm_user_guide.html. All fields and options are described in the CMM web interface online help.

Note: If the network access tag is missing from the front of the compute node, you can also locate the MAC address on a label located on the bottom of the compute node.

Logging on to the IMM2 web interface

To log on to the IMM2 web interface, complete the following steps.

Notes:

- The IMM2 user name and password are provisioned through the CMM. To use tools such as Advanced Settings Utility (ASU) for out-of-band communications, you must define local user accounts from the IMM web interface. To define local user accounts from the IMM web interface, click **IMM Management** > **Users**.

The local user accounts are valid only for accessing the IMM web interface on this compute node. However, if you back up the IMM configuration, that backup will not contain the local user accounts that were created from the IMM user interface.

- If you are logging on to the IMM2 for the first time after installation, the IMM2 defaults to Dynamic Host Configuration Protocol (DHCP). If a DHCP host is not available, the IMM2 assigns a static IP address between 192.168.70.101 and 192.168.70.114, depending on the bay in which the compute node is installed.
- You can also assign IP addresses through the CMM **ifconfig** command. For more information about the CMM **ifconfig** command, see the IBM Flex System Chassis Management Module: Command-Line Interface Reference Guide at http://pic.dhe.ibm.com/infocenter/flexsys/information/topic/com.ibm.acc.cmm.doc/cli_command_ifconfig.html.
- To assign IP addresses from the CMM web interface, click **Mgt Module Management** > **Network** > **Ethernet**.
- If the CMM and compute nodes are set to use DHCP, and the CMM loses connectivity to the network, the CMM attempts to acquire a new IP address when network connectivity is restored. The compute nodes will not attempt to acquire an IP address again and the compute node continues to use their existing IP addresses. Therefore, if you experience network problems on compute nodes after connectivity between the CMM and the network has been restored, you might need to reset the system-management processor on each of the compute nodes in the chassis (including IBM Flex System Manager management software, if it is installed).
- The IMM2 logs you out of the web interface if your browser is inactive for the number of minutes that you have specified for the timeout period. To modify the timeout period, from the IMM web interface, click **IMM Management > User > Global Login Settings > General**.

1. Open a web browser and in the **Address** or **URL** field, type the IP address or host name of the IMM2 to which you want to connect.
2. On the Login page, type the CMM user name and CMM password. You are then directed to the main page of the IMM2 web interface. If you are using the IMM2 for the first time, you can obtain the user name and password from your system administrator. All login attempts are documented in the IMM event log.

IMM2 action descriptions

This topic provides information about the IMM2 functions available from the web interface.

Navigate to activities you perform with the IMM at the top of the IMM window. The title bar identifies the user name that is logged in, allows you to configure **Settings** for the status screen refresh rate and a custom trespass message, and **Log out** of the IMM web interface. Beneath the title bar are tabs that allow you to access various IMM2 functions, as listed in Table 4 on page 46.

For more information about the IMM2 actions, see http://www.ibm.com/support/entry/portal/docdisplay?lndocid=MIGR-5086346.

Table 4. IMM2 actions

Tab	Selection	Description
System Status		The System Status page allows you to view system status, active system events, and hardware health information. It provides quick links to the Server Power Actions, and Remote Control functions of the Server Management tab, and allows you to view an image of the last operating-system-failure screen capture.
Events	Event Log	The Event Log page displays entries that are currently stored in the IMM event log. The log includes a text description of system events that are reported, including information about all remote access attempts and configuration changes. All events in the log are time stamped, using the IMM2 date and time settings. Some events also generate alerts, if they are configured to do so. You can sort and filter events in the event log and export them to a text file.
	Event Recipients	The Event Recipients page allows you to manage who will be notified of system events. It allows you to configure each recipient, and manage settings that apply to all event recipients. You can also generate a test event to verify notification feature operation.
Service and Support	Download Service Data	The Download Service Data page creates a compressed file of information that can be used by IBM Support to assist you.
Server Management	Server Firmware	The Server Firmware page displays firmware levels and allows you to update the IMM2 firmware, compute node firmware, and DSA firmware.
	Remote Control	The Remote Control page allows you to control the compute node at the operating system level. It provides access to both Remote Disk and Remote Console functionality. You can view and operate the compute node console from your computer, and you can mount one of your computer disk drives, such as the CD-ROM drive or the diskette drive, on the compute node. When you have mounted a disk, you can use it to restart the compute node and to update firmware on the compute node. The mounted disk appears as a USB disk drive that is attached to the compute node.
	Server Properties	The Server Properties page provides access to various properties, status, and settings for your compute node: • The General Settings tab displays information that identifies the system to operations and support personnel. • The LEDs tab displays the status of all system LEDs. It also allows you to change the state of the location LED. • The Hardware Information tab displays compute node vital product data (VPD). The IMM2 collects compute node information, compute node component information, and network hardware information. • The Environmentals tab displays voltage and temperature information for the compute node and its components. • The Hardware Activity tab displays a history of Field Replacable Unit (FRU) components that have been added to or removed from the system.
	Server Power Actions	The Server Power Actions page provides full remote power control over your compute node with power-on, power-off, and restart actions.
	Disks	The Disks page displays the status of hard disk drives in the system. You can click on a drive name to display active events for the hard disk drive.

Table 4. IMM2 actions (continued)

Tab	Selection	Description
Server Management	Processors	The Processors page displays the microprocessors in the system, along with their status and rated speed. You can click on a microprocessor name to display events and additional hardware information for the microprocessor.
	Server Timeouts	The Server Timeouts page allows you to manage compute node start timeouts to detect and recover from compute node hang occurrences.
	PXE Network Boot	The PXE Network Boot page allows you to change the host compute node startup (boot) sequence for the next restart to attempt a Preboot Execution Environment (PXE)/Dynamic Host Configuration Protocol (DHCP) network startup. The host startup sequence will be altered only if the host is not under Privileged Access Protection (PAP).
	Latest OS Failure Screen	The Latest OS Failure Screen page displays a screen image, when available, of the most recent operating system failure on the compute node. For your IMM to capture operating system failure screens, the operating system watchdog must be enabled.
IMM Management	IMM Properties	The IMM Properties page provides access to various properties, status, and settings for your IMM2: • The Firmware tab provides a link to the Server Firmware section of Server Management. • The IMM Date and Time Settings tab allows you to view and configure date and time settings for the IMM2. • The Serial Port tab configures the IMM2 serial port settings. These settings include the serial port baud rate used by the serial port redirection function and the key sequence to switch between the serial redirection and command-line interface (CLI) modes.
	Users	The Users page allows you to configure the IMM2 login profiles and global login settings, and to view users that are currently logged in to the IMM2. Global login settings include enabling Lightweight Directory Access Protocol (LDAP) compute node authentication, setting the web inactivity timeout, and customizing the account security settings.
	Network	The Network Protocol Properties page provides access to networking properties, status, and settings for your IMM2: • The Ethernet tab manages how the IMM2 communicates using Ethernet. • The SNMP tab configures the SNMPv1 and SNMPv3 agents. • The DNS tab configures the DNS compute nodes that the IMM2 interacts with. • The DDNS tab enables or disables and configures Dynamic DNS for the IMM2. • The SMTP tab configures SMTP compute node information used for alerts sent via email. • The LDAP tab configures user authentication for use with one or more LDAP compute nodes. • The Telnet tab manages Telnet access to the IMM2. • The USB tab controls the USB interface used for in-band communication between the compute node and the IMM2. These settings do not affect the USB remote control functions (keyboard, mouse, and mass storage). • The Port Assignments tab allows you to change the port numbers used by some services on the IMM2.

Table 4. IMM2 actions (continued)

Tab	Selection	Description
IMM Management	Security	The IMM Security page provides access to security properties, status, and settings for your IMM2: • The HTTPS Server tab allows you to enable or disable the HTTPS compute node and manage its certificates. • The CIM Over HTTPS tab allows you to enable or disable CIM over HTTPS and manage its certificates. • The LDAP Client tab allows you to enable or disable LDAP security and manage its certificates. • The SSH Server tab allows you to enable or disable the SSH compute node and manage its certificates.
	IMM Configuration	The IMM Configuration page displays a summary of the current IMM2 configuration settings. It also provides the following functions: • Backup the current IMM2 configuration • Restore a saved IMM2 configuration • Display backup and restoration status • Reset the configuration of the IMM2 to the factory defaults. • Access the IMM2 initial setup wizard **Note:** Backups that you make from the IMM user interface will not contain any local user accounts that were created from the IMM user interface.
	Restart IMM	The Restart IMM page allows you to reset the IMM.
	Reset IMM to factory defaults...	The Reset IMM to factory defaults... page allows you to reset the configuration of the IMM2 to the factory defaults. **Attention:** When you click **Reset IMM to factory defaults...**, all of the modifications that you made to the IMM2 are lost.
	Activation Key Management	The Activation Key Management page allows you to manage activation keys for optional IMM2 or compute node Features on Demand (FoD) features.

Accessing the IMM2 using the LAN over USB interface

Unlike a baseboard management controller, the IMM2 does not require IPMI device drivers or USB daemons for in-band IMM2 communication. Instead, a LAN over USB interface enables in-band communication to the IMM2; the IMM2 hardware on the system board presents an internal Ethernet interface from the IMM2 to the operating system. LAN over USB is also called the *USB in-band interface* in the IMM2 web interface.

The following table shows the IP addresses for the IMM2 and the host.

Table 5. LAN over USB addresses

IMM2 IP address	IMM2 IP subnet mask	Host address	Host subnet	Host subnet mask	Keyboard Controller Style (KCS) address
169.254.95.118	255.255.255.0	169.254.95.120	169.254.95.0/24	255.255.255.0	0x8C80

Potential conflicts with the LAN over USB interface

In some situations, the LAN over USB interface can conflict with certain network configurations, applications, or both. For example, Open MPI attempts to use all the available network interfaces on a server or compute node. Open MPI detects the IMM2 LAN over USB interface and attempts to use it to communicate with other systems in a clustered environment. The LAN over USB interface is an internal interface, so this interface does not work for external communication with other systems in the cluster.

Resolving conflicts with the IMM2 LAN over USB interface

Use any of the following actions to resolve LAN over USB conflicts with network configurations and applications.

About this task

Use one of the following methods to resolve LAN over USB conflicts.

Note: For conflicts with Open MPI, configure the application so that it does not attempt to use this interface.

- Take down the interface (run **ifdown** under Linux).
- Remove the device driver (run **rmmod** under Linux).
- Disable the LAN over USB interface from the CMM web interface.

  Note: You cannot update the firmware for a compute node while the LAN over USB interface is disabled. Before updating the firmware, you must re-enable the interface. After updating the firmware, you can disable the interface again.

  To disable the LAN over USB interface from the CMM web interface, complete the following steps.

  1. Log in to the CMM web interface.
  2. From the CMM web interface homepage click **Chassis Management** > **Compute Nodes**.
  3. Click the compute node ID.
  4. Click the **General** tab.
  5. Uncheck **Enable Ethernet Over USB** to disable the LAN over USB interface.

Configuring the LAN over USB interface manually

An IMM2 must be configured to use the LAN over USB interface. The firmware update package or Advanced Settings Utility attempts to perform the setup automatically, if needed. If the automatic setup fails or if you prefer to set up the LAN over USB manually, use one of the following processes.

For more information about LAN over USB configuration on different operating systems, see http://www.ibm.com/support/entry/portal/docdisplay?lndocid=MIGR-5083207.

Installing the LAN over USB Windows device driver

When you install a Windows operating system, there might be an unknown RNDIS device in the Device Manager. IBM provides a Windows INF file that identifies this device. The signed version of the INF file is included in all of the Windows versions of the IMM2, UEFI, and DSA update packages. Complete the following steps to install `ibm_rndis_server_os.inf`.

Procedure

To install the LAN over USB device driver for Windows, complete the following steps.

Note: You only have to perform these steps if the compute node is running a Windows operating system and the `ibm_rndis_server_os.inf` file has not been previously installed. The file only has to be installed once. It is required by Windows operating systems to detect and use the LAN over USB functionality.

1. Obtain a Windows version of the server or compute node UEFI code package (see "Updating firmware and device drivers" on page 21 for more information).
2. Extract the `ibm_rndis_server_os.inf` and `device.cat` files from the firmware update package and copy them to the `\WINDOWS\inf` subdirectory.

   Note: You can use the -x *path* command-line interface option to extract the files. For more information about this option, see the readme file that comes with the update package.
3. (Windows 2003) Install the `ibm_rndis_server_os.inf` file by right-clicking the file and clicking **Install**. This generates a PNF file of the same name in `\WINDOWS\inf`.

   (Windows 2008) Click **Computer Management** > **Device Manager** and find the RNDIS Device. Click **Properties** > **Driver** > **Reinstall driver**. Point the server or compute node to the `\Windows\inf` directory where it can find the `ibm_rndis_server_os.inf` file and install the device.
4. Click **Computer Management** > **Device Manager**. Right-click **Network adapters** and select **Scan for hardware changes**. A small pop-up confirms that the Ethernet device is found and installed. The New Hardware Wizard starts automatically.
5. When you are prompted `Can Windows connect to Windows Update to search for software?`, select **No, not this time**. Click **Next** to continue.
6. When you are prompted `What do you want the wizard to do?`, select **Install from a list or specific location (Advanced)**. Click **Next** to continue.
7. When you are prompted `Please choose your search and installation options`, select **Don't search. I will choose the driver to install**. Click **Next** to continue.
8. When you are prompted `Select a hardware type, and then click Next`, select **Network adapters**. Click **Next** to continue.
9. When you are prompted with the statement `Completing the Found New Hardware Wizard`, click **Finish**. A new local area connection appears. If the message `This connection has limited or no connectivity` is displayed, ignore this message.
10. Return to the Device Manager. **IBM USB Remote NDIS Network Device** appears under **Network Adapters**.
11. Use the Setup utility to view or set the IP address. See Table 5 on page 48 for information about the IP addresses.
    a. Connect a keyboard, monitor, and mouse to the console breakout cable and connect the console breakout cable to the compute node.
    b. Turn on the compute node (see "Turning on the compute node" on page 14).
    c. When the prompt `Press <F1> Setup` is displayed, press F1. If you have set an administrator password, you must type the administrator password to

access the full Setup utility menu. If you do not type the administrator password, a limited Setup utility menu is available.

d. Select **System Settings** → **Integrated Management Module** → **Network Configuration**.

e. Locate the IP address.

f. Exit from the Setup utility.

Installing the LAN over USB Linux device driver

Versions of Linux since RHEL5 Update 3 and SLES10 Service Pack 2 support the LAN over USB interface by default. This interface is detected and displayed during the installation of these operating systems.

See Table 5 on page 48 for information about the IP addresses.

Note: Older Linux distributions might not detect the LAN over USB interface, and might require manual configuration. For information about configuring LAN over USB on specific Linux distributions, see http://www.ibm.com/support/entry/portal/docdisplay?lndocid=MIGR-5083207.

The IMM2 LAN over USB interface requires that the `usbnet` and `cdc_ether` device drivers be loaded. If the drivers have not been installed, use **modprobe** to install them. When these drivers are installed, the IMM2 USB network interface is shown as a network device in the operating system. To discover the name that the operating system has assigned to the IMM2 USB network interface, type:

```
dmesg | grep -i cdc ether
```

Chapter 5. Parts listing, Types 7863, 8737, 8738, and 8956

The following replaceable components are available for the IBM Flex System x240 Compute Node Types 7863, 8737, 8738, and 8956.

For an updated parts listing on the web, go to http://www.ibm.com/supportportal.

Note: The illustrations in this document might differ slightly from your hardware.

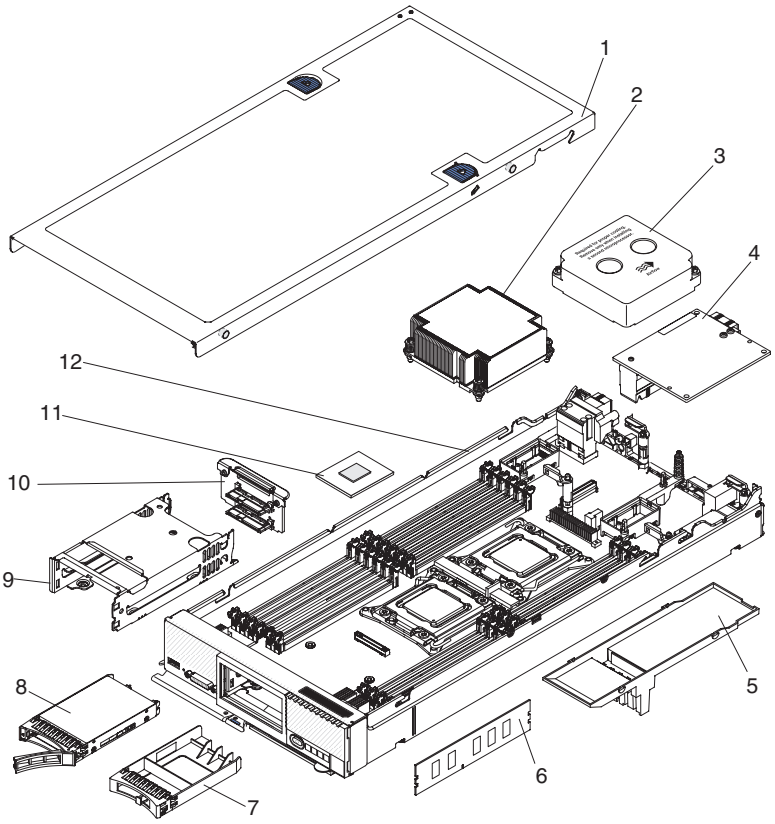

Replaceable components consist of consumable parts, structural parts, and customer replaceable units (CRUs):

- **Consumable parts:** Purchase and replacement of consumable parts (components such as printer cartridges, that have depletable life) is your responsibility. If IBM acquires or installs a consumable part at your request, you will be charged for the installation.
- **Structural parts:** Purchase and replacement of structural parts (components such as the top cover) is your responsibility. If IBM acquires or installs a structural part at your request, you will be charged for the installation.
- **Tier 1 customer replaceable unit (CRU):** Replacement of Tier 1 CRUs is your responsibility. If IBM installs a Tier 1 CRU at your request without a service contract, you will be charged for the installation.

© Copyright IBM Corp. 2013, 2014

- **Tier 2 customer replaceable unit:** You may install a Tier 2 CRU yourself or request IBM to install it, at no additional charge, under the type of warranty service that is designated for your compute node.

For information about the terms of the warranty and getting service and assistance, see the *Warranty Information* document.

Table 6. Parts listing, Types 7863, 8737, 8738, and 8956

Index	Description	CRU part number (Tier 1)	CRU part number (Tier 2)
2	Heat sink, front microprocessor		81Y5126
2	Heat sink (vapor chamber), front microprocessor (use with 135W microprocessors)		81Y4326
4	IBM Flex System FC3172 2-port 8 Gb FC Adapter	69Y1941	
4	IBM Flex System FC5022 2-port 16 Gb FC Adapter	88Y6373	
4	IBM Flex System IB6132 2-port FDR Infiniband Adapter	90Y3457	
4	IBM Flex System EN4132 2-port 10 Gb Ethernet Adapter	90Y3469	
4	IBM Flex System 2-port 8 Gb FC Adapter	95Y2378	
4	IBM Flex System EN2024 4-port 1 Gb Ethernet Adapter	49Y7902	
4	IBM Flex System FC5172 2-port 16 Gb FC Adapter	69Y1945	
4	IBM Flex System CN4054 10 Gb Virtual Fabric Adapter	88Y5922	
4	Emulex 4-port 10 Gb Mezzanine Adapter	90Y3557	
4	Mellanex 40 Gb Ethernet Mezzanine Adapter	90Y3485	
4	10 Gb 8 Port/ 40 Gb 2 Port Mezzanine Adapter	94Y5163	
4	IBM Flex System 2-port 16 Gb FC Adapter	95Y2389	
6	Memory, 2 GB 1R x 8 2 Gbit DDR-3 1333 MHz LP UDIMM	49Y1421	
6	Memory, 2 GB 1R x 8 2 Gbit DDR-3 1333 MHz LP RDIMM	49Y1423	
6	Memory, 4 GB 2R x 8 2 Gbit DDR-3 1333 MHz LP UDIMM	49Y1422	
6	Memory, 4 GB 1R x 4 2 Gbit DDR-3 1333 MHz LP RDIMM	49Y1424	
6	Memory, 4 GB 2R x 8 2 Gbit DDR-3 1333 MHz LP RDIMM	49Y1425	
6	Memory, 8 GB 2R x 4 2 Gbit DDR-3 1333 MHz LP RDIMM	49Y1415	
6	Memory, 16 GB 4R x 4 2 Gbit DDR-3 1066 MHz LP RDIMM	49Y1418	
6	Memory, 8 GB 2R x 8 2 Gbit DDR-3 1600 MHz LP RDIMM	90Y3111	
6	Memory, 4 GB 2R x 8 2 Gbit DDR-3 1600 MHz LP RDIMM	90Y3180	
6	Memory, 16 GB 2R x 4 4 Gbit DDR-3 LP RDIMM	00D4970	
6	Memory, 32 GB 2R x 4 4 Gbit DDR-3 1333 MHz LP LR-DIMM	90Y3107	
6	Memory, 16 GB 2R x 4 2 Gbit DDR-3 LP LR-DIMM	49Y1569	
6	Memory, 4 GB 1R x 4 2 Gbit DDR-3 1600 MHz LP DIMM	49Y1561	
6	Memory, 16 GB 2R x 4 4 Gbit DDR-3 1333 MHz LP DIMM	49Y1565	
6	Memory V2, 16 GB (1x16 GB, 2Rx4, 1.35V) PC3L-12800 CL11 ECC DDR-3 1600 MHz LP RDIMM [1]	46W0674	
6	Memory V2, 8 GB (1x8 GB, 1Rx4, 1.35V) PC3L-12800 CL11 ECC DDR-3 1600 MHz LP RDIMM [1]	00D5038	
6	Memory V2, 8 GB (1x8 GB, 2Rx8, 1.5V) PC3-14900 CL13 ECC DDR-3 1866 MHz LP RDIMM [1]	00D5042	

Table 6. Parts listing, Types 7863, 8737, 8738, and 8956 (continued)

Index	Description	CRU part number (Tier 1)	CRU part number (Tier 2)
6	Memory V2, 16 GB (1x16 GB, 2Rx4, 1.5V) PC3-14900 CL13 ECC DDR-3 1866 MHz LP RDIMM [1]	46W0670	
6	Memory V2, 8 GB (1x8 GB, 2Rx8, 1.35V) PC3L-12800 CL11 ECC DDR-3 1600 MHz LP UDIMM [1]	00D5018	
6	Memory V2, 32 GB (1x32 GB, 4Rx4, 1.50V) PC3L-14900 CL11 ECC DDR-3 1866 MHz LP LRDIMM [1]	46W0763	
6	Memory V2, 8 GB (1x8 GB, 2Rx8, 1.35V) PC3L-12800 CL11 ECC DDR-3 1600 MHz LP RDIMM [1]	00D5046	
6	Memory V2, 4 GB (1x4 GB, 1Rx4, 1.35V) PC3L-12800 CL11 ECC DDR-3 1600 MHz LP RDIMM [1]	00D5026	
6	Memory V2, 4 GB (1x4 GB, 2Rx8, 1.5V) PC3-14900 CL13 ECC DDR-3 1866 MHz LP RDIMM [1]	00D5030	
6	Memory V2, 4 GB (1x4 GB, 2Rx8, 1.35V) PC3L-12800 CL11 ECC DDR-3 1600 MHz LP UDIMM [1]	00D5014	
8	Hard disk drive, 2.5 inch hot-swap SAS 300 GB, 10K 6 Gbps (option)	42D0638	
8	Hard disk drive, 2.5 inch hot-swap SAS 600 GB, 10K 6 Gbps (option)	49Y2004	
8	Hard disk drive, 2.5 inch hot-swap SAS 900 GB 10K 6 Gbps (option)	81Y9651	
8	Hard disk drive, 2.5 inch hot-swap SAS 146 GB 15K 6 Gbps (option)	42D0678	
8	Hard disk drive, 2.5 inch hot-swap SAS 300 GB 15K 6 Gbps (option)	81Y9671	
8	Hard disk drive, 2.5 inch hot-swap SAS 500 GB 6 Gbps NL (option)	42D0708	
8	Hard disk drive, 2.5 inch hot-swap SAS 1 TB 6 Gbps NL (option)	81Y9691	
8	Hard disk drive, 2.5 inch hot-swap SATA 250 GB 6 Gbit NL (option)	81Y9723	
8	Hard disk drive, 2.5 inch hot-swap SATA 500 GB 6 Gbit NL (option)	81Y9727	
8	Hard disk drive, 2.5 inch hot-swap SATA 1 TB 7200 6 Gbit NL (option)	81Y9731	
8	Hard disk drive, 2.5 inch hot-swap SATA 200 GB SFF Slim SSD (option)	43W7721	
8	Hard disk drive, 2.5 inch hot-swap SATA 256 GB SFF Slim SSD (option)	90Y8644	
8	Hard disk drive, 2.5 inch hot-swap SATA 128 GB SFF Slim SSD (option)	90Y8649	
8	Hard disk drive, 1.8 inch SATA 200 GB SMART E-MLC SSD (option)	40K6897	
8	Hard disk drive, 1.8 inch SATA 50 GB SMART SSD (option)	43W7729	
8	Hard disk drive, 2.5 inch hot-swap SAS, 600 GB, 15K, 6 Gbps for NeXtScale System (option)	00AJ291	
8	Hybrid disk drive, 2.5 inch hot-swap SAS, 600 GB, 10K, 6 Gbps for NeXtScale System (option)	00AJ316	
8	Hard disk drive, 2.5 inch hot-swap SAS, 1.2 TB, 10K, 6 Gbps for NeXtScale System (option)	00FN041	
8	Hard disk drive, 1.8 inch hot-swap SATA, 120 GB MLC Enterprise Value SSD (option)	00AJ336	
8	Hard disk drive, 1.8 inch hot-swap SATA, 240 GB MLC Enterprise Value SSD (option)	00AJ341	
8	Hard disk drive, 1.8 inch hot-swap SATA, 480 GB MLC Enterprise Value SSD (option)	00AJ346	
8	Hard disk drive, 1.8 inch hot-swap SATA, 800 GB MLC Enterprise Value SSD (option)	00AJ351	

Table 6. Parts listing, Types 7863, 8737, 8738, and 8956 (continued)

Index	Description	CRU part number (Tier 1)	CRU part number (Tier 2)
8	Hard disk drive, hot-swap SATA, 120 GB G2HS SSD (option)	00AJ356	
8	Hard disk drive, hot-swap SATA, 240 GB G2HS SSD (option)	00AJ361	
8	Hard disk drive, hot-swap SATA, 480 GB BG2HS SSD (option)	00AJ366	
8	Hard disk drive, hot-swap SATA, 800 GB G2HS SSD (option)	00AJ371	
10	Hard disk drive backplane	81Y5194	
11	Intel Xeon Processor E5-2667 6C 2.6 GHz 15 MB Cache 1600 MHz 130W		81Y5170
11	Intel Xeon Processor E5-2680 8C 2.7 GHz 20 MB Cache 1600 MHz 130W		81Y5169
11	Intel Xeon Processor E5-2660 8C 2.2 GHz 20 MB Cache 1600 MHz 95W		81Y5168
11	Intel Xeon Processor E5-2650 8C 2.0 GHz 20 MB Cache 1600 MHz 95W		81Y5167
11	Intel Xeon Processor E5-2640 6C 2.5 GHz 15 MB Cache 1333 MHz 95W		81Y5166
11	Intel Xeon Processor E5-2630 6C 2.3 GHz 15 MB Cache 1333 MHz 95W		81Y5165
11	Intel Xeon Processor E5-2620 6C 2.0 GHz 15 MB Cache 1333 MHz 95W		81Y5164
11	Intel Xeon Processor E5-2609 4C 2.40 GHz 10 MB Cache 1066 MHz 80W		81Y5163
11	Intel Xeon Processor E5-2603 4C 1.8 GHz 10 MB Cache 1066 MHz 80W		81Y5161
11	Intel Xeon Processor E5-2630L 6C 2.0 GHz 15 MB Cache 1333 MHz 60W		81Y5204
11	Intel Xeon Processor E5-2650L 8C 1.8 GHz 20 MB Cache 1600 MHz 70W		81Y5160
11	Intel Xeon Processor E5-2637 2C 3.0 GHz 5 MB Cache 1600 MHz 80W		49Y8124
11	Intel Xeon Processor E5-2670 8C 2.6 GHz 20 MB Cache 1600 MHz 115W		81Y9419
11	Intel Xeon Processor E5-2665 8C 2.4 GHz 20 MB Cache 1600 MHz 115W		49Y8142
11	Intel Xeon Processor E5-2648L 8C 1.8 GHz 20 MB Cache 1600 MHz 70W		95Y4671
11	Intel Xeon Processor E5-2658 8C 2.1 GHz 20 MB Cache 1600 MHz 95W		95Y4676
11	Intel Xeon Processor E5-2643 4C 2.6 GHz 15M Cache 1600 MHz 130W		81Y5171
11	Intel Xeon Processor E5-2690 8C 2.9 GHz 20 MB Cache 1600 MHz 135W		49Y8115
11	Intel Xeon Processor E5-2670V2 EP-2.5G/25M, 10C, HT, T+, 8.0GT/S-QPI, 115W, DDR-3 1866 MHz [1]		00Y2785
11	Intel Xeon Processor E5-2620V2 EP-2.1G/15M, 6C, HT, T, 7.2GT/S-QPI, 80W, DDR-3 1600 MHz [1]		00Y2780
11	Intel Xeon Processor E5-2650V2 EP-2.6G/20M, 8C, HT, T+, 8.0GT/S-QPI, 95W, DDR-3 1866 MHz [1]		00Y2783
11	Intel Xeon Processor E5-2697V2 EP-2.7G/30M,12C,HT,TMAX,8.0GT/S-QPI, 130W, DDR-3 1866 MHz [1]		00Y2777
11	Intel Xeon Processor E5-2690V2 EP-3.0G/25M, 10C, HT, T+, 8.0GT/S-QPI, 130W, DDR-3 1866 MHz [1]		00Y2787
11	Intel Xeon Processor E5-2650LV2 EP-1.7G/25M, 10C, 8.0GT/S-QPI, 70W, DDR3 1600 MHz [1]		00Y2793
11	Intel Xeon Processor E5-2660V2 EP-2.2G/25M, 10C, HT, T+, 8.0GT/S-QPI, 95W, DDR-3 1866 MHz [1]		00Y2784
11	Intel Xeon Processor E5-2630V2 EP-2.6G/15M, 6C, HT, T, 7.2GT/S-QPI, 80W, DDR-3 1600 MHz [1]		00Y2781
11	Intel Xeon Processor E5-2640V2 EP-2.0G/20M, 8C, HT, T, 7.2GT/S-QPI, 95W, DDR-3 1600 MHz [1]		00Y2782

Table 6. Parts listing, Types 7863, 8737, 8738, and 8956 (continued)

Index	Description	CRU part number (Tier 1)	CRU part number (Tier 2)
11	Intel Xeon Processor E5-2680V2 EP-2.8G/25M, 10C, HT, T+, 8.0GT/S-QPI, 115W, DDR-3 1866 MHz [1]		00Y2786
11	Intel Xeon Processor E5-2609V2 EP-2.5G/10M, 4C, 6.4GT/S-QPI, 80W, DDR-3_1333 MHz [1]		00Y2779
11	Intel Xeon Processor E5-2658V2 (EMB) EP-2.4G/25M, 10C, 95W, 8.0GT/S, HT, T, DDR-3, 1866 MHz, R, HITC [1]		00AE524
11	Intel Xeon Processor E5-2637V2 EP-3.5G/15M, 4C, HT, TMAX, 8.0GT/S-QPI, 130W, DDR-3 1866 MHz [1]		00Y2789
11	Intel Xeon Processor E5-2618LV2 (EMB) EP-2.0G/15M, 6C, 50W, 6.4GT/S, HT, DDR-3, 1333 MHz, R, HITC [1]		00AE522
11	Intel Xeon Processor E5-2648LV2 (EMB) EP-1.9G/25M, 10C, 70W, 8.0GT/S, HT, T, DDR-3, 1866 MHz, R, HITC [1]		00AE523
11	Intel Xeon Processor E5-2628LV2 (EMB) EP-1.9G/20M, 8C, 70W, 7.2GT/S, HT, T, DDR-3, 1600 MHz, R, HITC [1]		00AE525
11	Intel Xeon Processor E5-2643V2 EP-3.5G/25M, 6C, HT, TMAX, 8.0GT/S-QPI, 130W, DDR-3, 1866 MHz [1]		00Y2790
11	Intel Xeon Processor E5-2630LV2 EP-2.4G/15M, 6C, HT, T, 7.2GT/S-QPI, 60W, DDR-3, 1600 MHz [1]		00Y2792
11	Intel Xeon Processor E5-2603V2 EP-1.8G/10M, 4C, 6.4GT/S-QPI, 80W, DDR-3, 1333 MHz [1]		00Y2778
11	Intel Xeon Processor E5-2695V2 EP-2.4G/30M, 12C, HT, TMAX, 8.0GT/S-QPI, 115W, DDR-3, 1866 MHz [1]		00Y2776
11	Intel Xeon Processor E5-2667V2, 3.3G/25M, 8C, 1866 MHz, 130W [1, 2, 3]		00Y2791
12	System-board assembly for IBM Flex System x240 Compute Node without embedded virtual fabric (models 8737 - A1x, H1x, J1x, M1x, 8738 - H1x)		00AE580
12	System-board assembly for IBM Flex System x240 Compute Node with embedded 10 GB virtual fabric (models 8737 - D2x, F2x, G2x, H2x, HBC, L2x, M2x, N2x, Q2x, R2x, 8738 - H2x)		00AE579
12	System-board assembly for IBM Flex System x240 Compute Node V2 without embedded virtual fabric (models 8737 - 1Mx, 22x, 2Mx, 3Mx, 42x, 4Mx, 5Mx, 62x, 6Mx, 72x, 7Mx, 8Mx, 9Mx, BMx, CMx)		00AE553
12	System-board assembly for IBM Flex System x240 Compute Node V2 with embedded 10 GB virtual fabric (models 8737 - 14x, 24x, 34x, 44x, 52x, 54x, 64x, 74x, 84x, 8Dx, 94x, B4x, C4x)		00AE552
	Microprocessor-retention assembly		81Y4308
	Microprocessor installation tool		94Y9955
	Fabric connector	81Y5175	
	Light path LED card	81Y5290	
	IBM Flex System console breakout cable	81Y5287	
	USB enablement kit	81Y4316	
	Bezel, front assembly	81Y5130	
	Bezel, front assembly for solid state drive exflash kit	81Y4363	
	Heat sink, rear microprocessor		81Y5127

Table 6. Parts listing, Types 7863, 8737, 8738, and 8956 (continued)

Index	Description	CRU part number (Tier 1)	CRU part number (Tier 2)
	Heat sink (vapor chamber), rear microprocessor (use with 135W microprocessors)		81Y4327
	Adapter-retention assembly	94Y4866	
	Miscellaneous parts kit	81Y5135	
	System service label kit	81Y5131	
	Alcohol wipes		59P4739
	Thermal grease		41Y9292
	CMOS battery, 3.0 volt (all models)	33F8354	
	2 GB USB Flash Key	42D0545	
	RFID label tag assembly (EMEA)	00E6323	
	RFID label tag assembly (US)	74Y8800	
	ServeRAID M5115 SAS/SATA RAID Controller (optional)	00D5073	
	ServeRAID M5100 Series hard disk drive backplane and flex cable assembly	46C9941	
	ServeRAID M5100 Series solid state drive backplane and flex cable assembly	46C9943	
	ServeRAID M5100 Series internal solid-state drive flex cable (U-shaped)	00D5078	
	ServeRAID M5100 Series enablement kit left air baffle	00D5080	
	ServeRAID M5100 Series enablement kit right air baffle	00D5081	
	ServeRAID M5100 Series power cable	44E4767	
	ServeRAID M5100 Series solid state drive bezel	44E4768	
	ServeRAID M5100 Series IBM Flex System Flash Kit V2 for x240	47C8808	
	IBM Flex System Flash Kit V2 backplane card assembly	47C8843	
	IBM Flex System cage/interposer card	47C9886	
	IBM Flex System PCIe Expansion Node cover	90Y8491	
	IBM Flex System PCIe Expansion Node label kit	90Y8492	
	IBM Flex System PCIe Expansion Node low-profile PCIe riser	90Y8493	
	IBM Flex System PCIe Expansion Node full-height PCIe riser	90Y8494	
	IBM Flex System PCIe Expansion Node system board	90Y8495	
	IBM Flex System PCIe Expansion Node miscellaneous parts kit	90Y8496	
	IBM Flex System PCIe Expansion Node interposer cable	90Y8498	
	IBM Flex System PCIe Expansion Node filler, low-profile PCIe riser	90Y8499	
	IBM Flex System PCIe Expansion Node filler, full-height PCIe riser	90Y8500	
	IBM Flex System PCIe Expansion Node auxiliary power cable	90Y8501	

Table 6. Parts listing, Types 7863, 8737, 8738, and 8956 (continued)

Index	Description	CRU part number (Tier 1)	CRU part number (Tier 2)
1. V2 models only. Not supported in models 8737 - A1x, D2x, F2x, G2x, H1x, H2x, J1x, HBC, L2x, M1x, M2x, N2x, Q2x, R2x, or 8738 - H1x, H2x 2. Use of the E5-2667V2 processor in the Flex System x240 V2 compute node is limited to 30 degrees C up to 3000 feet. Above 3000 feet, a de-rating of 1 degree C for every 600 feet should be applied. Use of the ServeRAID M5115 SAS/SATA RAID Controller with the E5-2667V2 processor is not supported. 3. Flex System x240 configurations using the E5-2667V2 processor will operate at acoustic levels significantly greater than typical Flex System levels, and the following noise hazard warning may apply: **Important:** Government regulations (such as those prescribed by OSHA or European Community Directives) may govern noise level exposure in the workplace and may apply to you and your server installation. The actual sound pressure levels in your installation depend upon a variety of factors, including the number of racks in the installation; the size, materials, and configuration of the room; the noise levels from other equipment; the room ambient temperature, and employees' location in relation to the equipment. Further, compliance with such government regulations also depends upon a variety of additional factors, including the duration of employees' exposure and whether employees wear hearing protection. You should consult with qualified experts in this field to determine whether you are in compliance with the applicable regulations.			

Consumable and structural parts

Consumable and structural parts are not covered by the IBM Statement of Limited Warranty.

Table 7. Consumable and structural parts, Types 7863, 8737, 8738, and 8956

Index	Description	Part number
1	Cover (also order system service label kit 81Y5131)	81Y5129
3	Filler, front microprocessor socket	81Y5134
5	Air baffle over DIMMs	81Y5177
7	Filler, hard disk drive bay	44T2248
9	Hard disk drive cage	94Y4867
	Chassis bulkhead	94Y4869
	Front handle assembly	81Y5203

To order a consumable or structural part, complete the following steps:

1. Go to http://www.ibm.com.
2. From the **Products** menu, select **Upgrades, accessories & parts**.
3. Click **Obtain maintenance parts**; then, follow the instructions to order the part from the retail store.

If you need help with your order, call the toll-free number that is listed on the retail parts page, or contact your local IBM representative for assistance.

Chapter 6. Troubleshooting

Use this information to diagnose and correct problems that might occur in your IBM Flex System x240 Compute Node Types 7863, 8737, 8738, and 8956.

The information in this section describes tools and procedures for solving hardware and software problems. If you cannot diagnose and correct a problem by using the information, see "Getting help and technical assistance," on page 637 for more information.

Service bulletins

IBM continually updates the support website with tips and techniques that you can use to solve problems that you might have with the IBM Flex System x240 Compute Node Types 7863, 8737, 8738, and 8956.

To find service bulletins that are available for the IBM Flex System x240 Compute Node Types 7863, 8737, 8738, and 8956, go to http://www.ibm.com/supportportal and search for the terms 7863, 8737, or 8738 and `retain`.

Diagnostic tools

Use this information to review the diagnostic tools to diagnose and solve hardware-related problems.

Light path diagnostics

Use this information as an overview of light path diagnostics.

Light path diagnostics is a system of LEDs above the control panel and on various internal components of the compute node. When an error occurs, LEDs can be lit throughout the compute node to help identify the source of the error.

Viewing the light path diagnostics LEDs

Use this information to locate and identify the light path diagnostics LEDs.

Before you work inside the compute node to view light path diagnostics LEDs, read "Safety" on page v and "Installation guidelines" on page 569.

If an error occurs, view the light path diagnostics LEDs in the following order:

1. Look at the control panel on the front of the compute node.

© Copyright IBM Corp. 2013, 2014

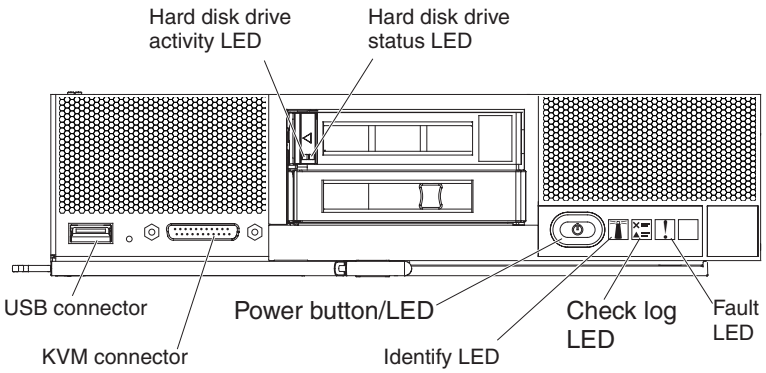

- If the check log LED is lit, it indicates that a condition that causes an event to log in the IMM event log has occurred.
- If the fault LED is lit, it indicates that an error has occurred; view the light path diagnostics panel and LEDs to isolate the failing component.

2. To view the light path diagnostics LEDs, select one of the following procedures:
   - You can view the LEDs through the CMM **led** command, the CMM web interface, or IBM Flex System Manager management software (if installed).
     - For more information about the CMM **led** command, see the IBM Flex System Chassis Management Module: Command-Line Interface Reference Guide at http://pic.dhe.ibm.com/infocenter/flexsys/information/topic/com.ibm.acc.cmm.doc/cli_command_led.html.
     - From the CMM web interface, select **Compute Nodes** from the Chassis Management menu. For more information, see the the IBM Flex System Chassis Management Module: User's Guide at http://pic.dhe.ibm.com/infocenter/flexsys/information/topic/com.ibm.acc.cmm.doc/cmm_user_guide.html. All fields and options are described in the CMM web interface online help.
     - For more information about IBM Flex System Manager management software, see the IBM Flex System Manager Software: Installation and Service Guide at http://pic.dhe.ibm.com/infocenter/flexsys/information/topic/com.ibm.acc.8731.doc/product_page.html.
   - If you are in the same location as the compute node, you can complete the following steps:
     a. Remove the compute node from the IBM Flex System chassis, (see "Removing a compute node from a chassis" on page 571 for instructions).
     b. Carefully lay the compute node on a flat, static-protective surface.
     c. Open the compute node cover (see "Removing the compute node cover" on page 575 for instructions).
     d. Remove the air baffles installed over the DIMM connectors.
     e. Press and hold the power button. When you press the power button, LEDs on the light path diagnostics panel and the system board will be lit if there are any hardware-related issues.

        Note: The power source for light path diagnostics is designed only to last a short time. If you press the power button and the light path diagnostics LED lights, light path diagnostics is charged to light the LEDs.

The following illustration shows the LEDs on the light path diagnostics panel.

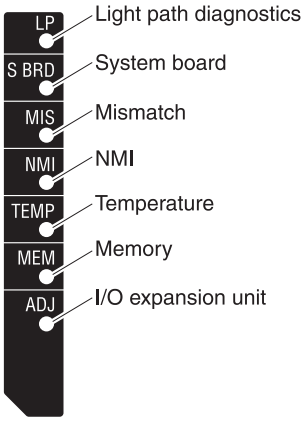

The following illustration shows the locations of the light path diagnostics LEDs on the system board.

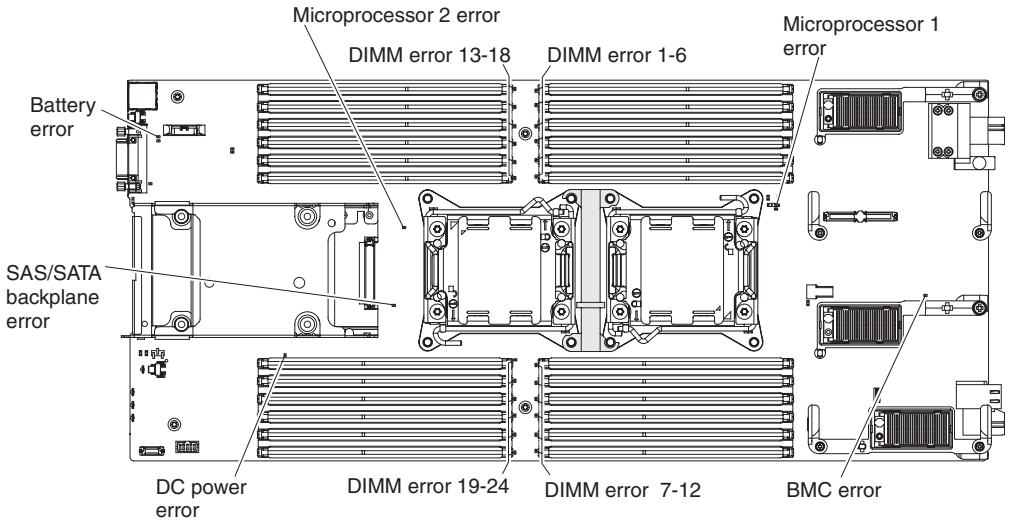

Light path diagnostics LEDs

Use this information to diagnose possible errors that are indicated by the light path diagnostics LEDs.

The following table describes the LEDs on the light path diagnostics panel and the light path diagnostics LEDs on the system board. See "Viewing the light path diagnostics LEDs" on page 61 for information about lighting the LEDs.

Table 8. Light path diagnostics LEDs

Lit light path diagnostics LED	Description
None	The compute node is not sufficiently charged to display the LEDs on the system board.
Battery error	The system CMOS battery is not installed or is not working.
BMC error	Future use only.
DC power error	Future use only.
DIMM *x* error	A memory error occurred.
I/O expansion unit	Future use only.

Table 8. Light path diagnostics LEDs (continued)

Lit light path diagnostics LED	Description
Light path diagnostics	The power source for the light path diagnostics LEDs is charged.
Light path diagnostics only	No errors have occurred.
Memory	A memory error has occurred.
Microprocessor *x* error	The IMM2 lights this LED when a microprocessor has failed or overheated or the start microprocessor (CPU 1) is missing. The fault LED on the front panel is also lit.
Mismatch	The microprocessors are mismatched. If the Memory LED is also lit, the DIMMs are mismatched.
NMI	The system board has failed.
SAS/SATA backplane error	A hard disk drive backplane error has occurred.
System board	The system board has failed.
Temperature	The system temperature has exceeded a threshold level.

IMM event log

Use this information as an overview of the IMM event log.

The integrated management module II (IMM2) consolidates the system-management processor functionality, video controller, and remote presence capabilities in a single chip on the system board. The IMM2 monitors all components of the compute node and posts events in the IMM event log. In addition, most events are also sent to the Chassis Management Module event log. You can view the IMM event log through the Dynamic System Analysis (DSA) program (as the ASM event log).

To diagnose and resolve IMM error codes, see "IMM messages" on page 176.

Viewing event logs through the Setup utility

You can view the IMM and POST events through the Setup utility.

Procedure

To view the POST event log or system-event log, complete the following steps:

1. Connect a keyboard, monitor, and mouse to the console breakout cable and connect the console breakout cable to the compute node.
2. Turn on the compute node.
3. When the prompt `<F1> Setup` is displayed, press F1. If you have set both a power-on password and an administrator password, you must type the administrator password to view the event logs.
4. Select **System Event Logs** and use one of the following procedures:
   - To view the POST event log, select **POST Event Viewer**.
   - To view the system-event log, select **System Event Log**.

Viewing event logs without restarting the compute node

If the compute node is not hung, methods are available for you to view one or more event logs without having to restart the compute node.

You can view the Chassis Management Module event log in the IBM Flex System Manager Chassis Manager, or through the **Event Log** link in IBM Flex System

Manager management software (if installed). For more information about IBM Flex System Manager management software, see the IBM Flex System Manager Software: Installation and Service Guide at http://pic.dhe.ibm.com/infocenter/flexsys/information/topic/com.ibm.acc.8731.doc/product_page.html.

You can also view the Chassis Management Module event log through the **Event Log** link by using the CMM **displaylog** command or the CMM web interface.

- For more information about the CMM **displaylog** command, see the IBM Flex System Chassis Management Module: Command-Line Interface Reference Guide at http://pic.dhe.ibm.com/infocenter/flexsys/information/topic/com.ibm.acc.cmm.doc/cli_command_displaylog.html.
- From the CMM web interface, select **Event Log** from the Events menu. For more information, see the the IBM Flex System Chassis Management Module: User's Guide at http://pic.dhe.ibm.com/infocenter/flexsys/information/topic/com.ibm.acc.cmm.doc/cmm_user_guide.html. All fields and options are described in the CMM web interface online help.

  Note: If event IDs are not currently displayed in the Event Log page, you can enable them. To do so, click **Filter Events** and select the **Event ID** check box under **Visible columns**.

If you have installed DSA Portable Edition, you can use it to view the system-event log (as the IPMI event log), the operating-system event logs, or the merged DSA log. You can also use DSA Preboot to view these logs, although you must restart the compute node to use DSA Preboot. To install Portable DSA or DSA Preboot or to download a DSA Preboot CD image, go to http://www.ibm.com/support/entry/portal/docdisplay?lndocid=SERV-DSA.

If IPMItool is installed in the compute node, you can use it to view the system-event log. Most recent versions of the Linux operating system come with a current version of IPMItool. For information about IPMItool, complete the following steps.

Note: Changes are made periodically to the IBM website. The actual procedure might vary slightly from what is described in this document.

1. Go to http://www.ibm.com/developerworks.
2. Click **Linux**.
3. Click the **Linux blueprints** tab.
4. Click **Blueprints for Linux on IBM systems**, and then click **Using Intelligent Platform Management Interface (IPMI) on IBM Linux platforms**.

The following table describes the methods that you can use to view the event logs, depending on the condition of the compute node. The first two conditions generally do not require that you restart the compute node.

Table 9. Methods for viewing event logs

Condition	Action
The compute node is not hung and is connected to a network.	Use any of the following methods: • In a web browser, type the IP address of the Chassis Management Module and go to the Event Log page. • Run Portable or Installable DSA to view the event logs or create an output file that you can send to IBM Support. • Use IPMItool to view the system-event log.
The compute node is not hung and is not connected to a network.	Use IPMItool locally to view the system-event log.
The compute node is hung.	Use any of the following methods: • If DSA Preboot is installed, restart the compute node and press F2 to start DSA Preboot and view the event logs. • If DSA Preboot is not installed, insert the DSA Preboot CD and restart the compute node to start DSA Preboot and view the event logs. • Alternatively, you can restart the compute node and press F1 to start the Setup utility and view the POST event log or system-event log. For more information, see "Viewing event logs through the Setup utility" on page 64.

IBM Dynamic System Analysis

IBM Dynamic System Analysis (DSA) collects and analyzes system information to aid in diagnosing compute node problems.

DSA collects the following information about the compute node:

- Drive health information
- Event logs for ServeRAID controllers and system-management processors
- Hardware inventory, including PCI and USB information
- Installed applications and hot fixes
- Kernel modules
- Light path diagnostics status
- Network interfaces and settings
- Performance data and details about processes that are running
- RAID and controller configuration
- Integrated management module 2 status and configuration
- System configuration
- Vital product data and firmware information

DSA creates a DSA log, which is a chronologically ordered merge of the system-event log (as the IPMI event log), the IMM event log (as the ASM event log), and the operating-system event logs. You can send the DSA log as a file to a support representative or view the information as a text file or HTML file.

In a multi-node environment, each node has a unique DSA interface. You can view node-specific information, such as error logs, from these unique DSA interfaces.

To obtain DSA code and the *Dynamic System Analysis Installation and User's Guide*, go to http://www.ibm.com/support/entry/portal/docdisplay?lndocid=SERV-DSA.

DSA editions

Two editions of Dynamic System Analysis are available:

- **DSA Portable**

  DSA Portable Edition runs within the operating system; you do not have to restart the compute node to run it. It is packaged as a self-extracting file that you download from the Web. When you run the file, it self-extracts to a temporary folder and performs comprehensive collection of hardware and operating-system information. After it runs, it automatically deletes the temporary files and folder and leaves the results of the data collection and diagnostics on the compute node.

  If you are able to start the compute node, use DSA Portable.

- **DSA Preboot**

  DSA Preboot runs outside of the operating system; you must restart the compute node to run it. It is packaged as an ISO image that you download from the Web, or it is provided in flash memory on the compute node. In addition to the capabilities of the other editions of DSA, DSA Preboot includes diagnostic routines that would be disruptive to run within the operating-system environment (such as resetting devices and causing loss of network connectivity). It has a graphical user interface that you can use to specify which diagnostics to run and to view the diagnostic and data collection results.

  If you are unable to restart the compute node or if you need comprehensive diagnostics, use DSA Preboot.

  DSA Preboot performs the following tasks:

  – Collects system information into a compressed XML file that you can send to IBM Support
  – Provides a bootable image that you can use to run extended hardware tests independent of the operating system or applications
  – Collects the version and license information from local VMware ESXi hypervisor software

Running DSA Preboot

Use this information to run DSA Preboot.

About this task

To run the DSA Preboot diagnostic programs, complete the following steps:

1. If the compute node is turned on, turn off the compute node (see "Turning off the compute node" on page 15).
2. If necessary, connect a keyboard, monitor, and mouse to the console breakout cable and connect the console breakout cable to the compute node.
3. Turn on the compute node (see "Turning on the compute node" on page 14).
4. When the prompt `<F2> Diagnostics` is displayed, press F2.
5. Select **Quit** from the actions available on the IBM Memory Test screen.

   Note: After you exit the IBM Memory Test screen, you must restart the compute node to access the stand-alone memory diagnostic environment again.

6. Enter `gui` to start the DSA graphical user interface, or select **cmd** to display the DSA interactive menu.
7. From the diagnostic programs screen, select the test that you want to run, and follow the instructions on the screen. For additional information, see the *Dynamic System Analysis Installation and User's Guide*, which is available at http://www.ibm.com/support/entry/portal/docdisplay?lndocid=SERV-DSA.

Help for DSA is available. For help about the DSA CLI, enter `help` in the command line. For help about the DSA user interface, press F1. Pressing F1 within a help panel displays additional online documentation.

Diagnostic text messages

Use this information to understand the diagnostic text messages that are displayed while the tests are running.

A diagnostic text message contains one of the following results:

- **Passed:** The test was completed without any errors.
- **Failed:** The test detected an error.
- **User Aborted:** You stopped the test before it was completed.
- **Not Applicable:** You attempted to test a device that is not present in the compute node.
- **Aborted:** The test could not proceed because of the compute node configuration.
- **Warning:** The test could not be run. There was no failure of the hardware that was being tested, but there might be a hardware failure elsewhere, or another problem prevented the test from running; for example, there might be a configuration problem, or the hardware might be missing or is not being recognized.

The result is followed by an error code or other additional information about the error.

Viewing the test results

Use this information to view the test results.

About this task

You can use one of the following methods to access the test log when the tests are completed:

- From the DSA command line, issue the DSA CLI View command or select the **Diagnostic Event Log** option from the DSA graphical user interface (GUI).
- From the DSA interactive menu, select the **getextendedresults** option.
- From the DSA interactive menu, select the **View** option to view all of the collected results and error log data.
- In the DSA GUI, select **DSA Error Log** from the System Information page.

You can send the DSA error log file to IBM Support to aid in diagnosing the compute node problems, or you can use the DSA CLI copy command to copy the log to an external USB device.

DSA diagnostic test results

After running the DSA diagnostic tests, use this information to resolve any issues that were found.

DSA CPU stress test results

The following messages can result when you run the CPU stress test.

089-000-000 CPU Stress Test Passed

Explanation: CPU Stress Test Passed.

Severity: Event

Serviceable: No

Recoverable: No

Automatically notify Support: No

Related Links:

- IBM Support Website
- Latest level of DSA
- Latest level of BMC/IMM

089-801-000 CPU Stress Test Aborted

Explanation: CPU Stress Test Aborted. Internal Program Error.

Severity: Warning

Serviceable: Yes

Recoverable: No

Automatically notify Support: No

User response: Complete the following steps:

1. Turn off and restart the system.
2. Make sure that the DSA Diagnostic code is at the latest level.
3. Run the test again.
4. Check system firmware level and upgrade if necessary. The installed firmware level can be found in the DSA Diagnostic Event Log within the Firmware/VPD section for this component. The latest level firmware for this component can be found in reference to this system type at the IBM Support website: http://www.ibm.com/support/docview.wss?uid=psg1MIGR-4JTS2T.
5. Run the test again.
6. If the system has stopped responding, turn off and restart the system and then run the test again.
7. If failure remains, refer to "Troubleshooting by symptom" in the system "Installation and Service Guide" for the next corrective action.

Related Links:

- IBM Support Website
- Latest level of DSA
- Latest level of BMC/IMM

089-802-000 CPU Stress Test Aborted

Explanation: CPU Stress Test Aborted. System resource unavailability error.

Severity: Warning

Serviceable: Yes

Recoverable: No

Automatically notify Support: No

User response: Complete the following steps:

1. Turn off and restart the system.

2. Make sure that the DSA Diagnostic code is at the latest level.
3. Run the test again.
4. Check system firmware level and upgrade if necessary. The installed firmware level can be found in the DSA Diagnostic Event Log within the Firmware/VPD section for this component.
5. Run the test again.
6. If the system has stopped responding, turn off and restart the system and then run the test again.
7. If failure remains, refer to "Troubleshooting by symptom" in the system "Installation and Service Guide" for the next corrective action.

Related Links:

- IBM Support Website
- Latest level of DSA
- Latest level of BMC/IMM

089-803-000 CPU Stress Test Aborted

Explanation: CPU Stress Test Aborted. Memory size is insufficient to run the test. At least 1GB is required.

Severity: Warning

Serviceable: Yes

Recoverable: No

Automatically notify Support: No

Related Links:

- IBM Support Website
- Latest level of DSA
- Latest level of BMC/IMM

089-804-000 CPU Stress Test Aborted

Explanation: CPU Stress Test Aborted. User pressed Ctrl-C.

Severity: Warning

Serviceable: Yes

Recoverable: No

Automatically notify Support: No

Related Links:

- IBM Support Website
- Latest level of DSA
- Latest level of BMC/IMM

089-901-000 CPU Stress Test Failed

Explanation: CPU Stress Test Failed.

Severity: Error

Serviceable: Yes

Recoverable: No

Automatically notify Support: No

User response: Complete the following steps:

1. If the system has stopped responding, turn off and restart the system and then run the test again.
2. Make sure that the DSA Diagnostic code is at the latest level.

3. Run the test again.
4. Check system firmware level and upgrade if necessary. The installed firmware level can be found in the DSA Diagnostic Event Log within the Firmware/VPD section for this component.
5. Run the test again.
6. If the system has stopped responding, turn off and restart the system and then run the test again.
7. If failure remains, refer to "Troubleshooting by symptom" in the system "Installation and Service Guide" for the next corrective action.

Related Links:

- IBM Support Website
- Latest level of DSA
- Latest level of BMC/IMM

DSA memory stress test results

The following messages can result when you run the memory stress test.

202-000-000 MemStr Test Passed

Explanation: Test Passed.

Severity: Event

Serviceable: No

Recoverable: No

Automatically notify Support: No

Related Links:

- IBM Support Website
- Latest level of DSA
- Latest level of BMC/IMM

202-801-000 MemStr Test Aborted

Explanation: Internal program error.

Severity: Warning

Serviceable: Yes

Recoverable: No

Automatically notify Support: No

User response: Complete the following steps:

1. Turn off and restart the system.
2. Make sure that the DSA Diagnostic code is at the latest level.
3. Run the test again.
4. If the system has stopped responding, turn off and restart the system.
5. Check the system firmware level and upgrade if necessary.
6. Run the memory diagnostic to identify the specific failing DIMM.
7. If the failure remains, refer to "Troubleshooting by symptom" in the system "Installation and Service Guide" for the next corrective action.

Related Links:

- IBM Support Website
- Latest level of DSA
- Latest level of BMC/IMM

202-802-000 MemStr Test Aborted

Explanation: Memory size is insufficient to run the test. At least 1 GB is required.

Severity: Warning

Serviceable: Yes

Recoverable: No

Automatically notify Support: No

Related Links:

- IBM Support Website
- Latest level of DSA
- Latest level of BMC/IMM

202-803-000 MemStr Test Aborted

Explanation: User pressed Ctrl-C.

Severity: Warning

Serviceable: Yes

Recoverable: No

Automatically notify Support: No

Related Links:

- IBM Support Website
- Latest level of DSA
- Latest level of BMC/IMM

202-901-000 MemStr Test Failed

Explanation: Test Failed.

Severity: Error

Serviceable: Yes

Recoverable: No

Automatically notify Support: No

User response: Complete the following steps:

1. Execute the standard DSA memory diagnostics to validate all memory.
2. Make sure that the DSA Diagnostic code is at the latest level.
3. Turn off the system and disconnect it from power.
4. Reseat the memory cards and DIMMs.
5. Reconnect the system to power and turn the system on.
6. Run the test again.
7. Execute the standard DSA memory diagnostics to validate all memory.
8. If the failure remains, refer to "Troubleshooting by symptom" in the system "Installation and Service Guide" for the next corrective action.

Related Links:

- IBM Support Website
- Latest level of DSA
- Latest level of BMC/IMM

202-902-000 MemStr Test Failed

Explanation: Memory size is insufficient to run the test.

Severity: Error

Serviceable: Yes

Recoverable: No

Automatically notify Support: No

User response: Complete the following steps:

1. Ensure that all memory is enabled by checking the "Available System Memory" in the "Resource Utilization" section of the DSA Diagnostic Event log.
2. If necessary, access the Configuration/Setup Utility program by pressing F1 during system boot and enable all memory.
3. Make sure that the DSA Diagnostic code is at the latest level.
4. Run the test again.
5. Execute the standard DSA memory diagnostics to validate all memory.
6. If the failure remains, refer to "Troubleshooting by symptom" in the system "Installation and Service Guide" for the next corrective action.

Related Links:

- IBM Support Website
- Latest level of DSA
- Latest level of BMC/IMM

DSA memory isolation test results

The following messages can result when you run the memory isolation test.

201-000-000 Standalone Memory Test Passed

Explanation: Quick/Full Memory Test All CPUs Passed.

Severity: Event

Serviceable: No

Recoverable: No

Automatically notify Support: No

Related Links:

- IBM Support Website
- Latest level of DSA
- Latest level of BMC/IMM

201-000-001 Standalone Memory Test Passed

Explanation: Quick/Full Memory Test CPU 1 Passed.

Severity: Event

Serviceable: No

Recoverable: No

Automatically notify Support: No

Related Links:

- IBM Support Website
- Latest level of DSA
- Latest level of BMC/IMM

201-000-002 Standalone Memory Test Passed

Explanation: Quick/Full Memory Test CPU 2 Passed.

Severity: Event

Serviceable: No

Recoverable: No

Automatically notify Support: No

Related Links:

- IBM Support Website
- Latest level of DSA
- Latest level of BMC/IMM

201-000-003 Standalone Memory Test Passed

Explanation: Quick/Full Memory Test CPU 3 Passed.

Severity: Event

Serviceable: No

Recoverable: No

Automatically notify Support: No

Related Links:

- IBM Support Website
- Latest level of DSA
- Latest level of BMC/IMM

201-000-004 Standalone Memory Test Passed

Explanation: Quick/Full Memory Test CPU 4 Passed.

Severity: Event

Serviceable: No

Recoverable: No

Automatically notify Support: No

Related Links:

- IBM Support Website
- Latest level of DSA
- Latest level of BMC/IMM

201-811-000 Standalone Memory Test Aborted

Explanation: Unable to Locate SMBIOS key "_SM_".

Severity: Warning

Serviceable: No

Recoverable: No

Automatically notify Support: No

User response: Complete the following steps:

1. Perform the actions mentioned one at a time and try the test after each action.
2. If the problem remains, contact your technical-service representative.
3. Turn off the system and disconnect it from power. Wait for 45 seconds. Reseat DIMM(s). Reconnect it to power.

4. Make sure that DSA and BIOS/uEFI are at the latest level.

Related Links:
- IBM Support Website
- Latest level of DSA
- Latest level of BMC/IMM

201-811-001 Standalone Memory Test Aborted

Explanation: Unable to Locate SMBIOS key "_SM_".

Severity: Warning

Serviceable: No

Recoverable: No

Automatically notify Support: No

User response: Complete the following steps:
1. Perform the actions mentioned one at a time and try the test after each action.
2. If the problem remains, contact your technical-service representative.
3. Turn off the system and disconnect it from power. Wait for 45 seconds. Reseat DIMM(s). Reconnect it to power.
4. Make sure that DSA and BIOS/uEFI are at the latest level.

Related Links:
- IBM Support Website
- Latest level of DSA
- Latest level of BMC/IMM

201-811-002 Standalone Memory Test Aborted

Explanation: Unable to Locate SMBIOS key "_SM_".

Severity: Warning

Serviceable: No

Recoverable: No

Automatically notify Support: No

User response: Complete the following steps:
1. Perform the actions mentioned one at a time and try the test after each action.
2. If the problem remains, contact your technical-service representative.
3. Turn off the system and disconnect it from power. Wait for 45 seconds. Reseat DIMM(s). Reconnect it to power.
4. Make sure that DSA and BIOS/uEFI are at the latest level.

Related Links:
- IBM Support Website
- Latest level of DSA
- Latest level of BMC/IMM

201-811-003 Standalone Memory Test Aborted

Explanation: Unable to Locate SMBIOS key "_SM_".

Severity: Warning

Serviceable: No

Recoverable: No

Automatically notify Support: No

User response: Complete the following steps:

1. Perform the actions mentioned one at a time and try the test after each action.
2. If the problem remains, contact your technical-service representative.
3. Turn off the system and disconnect it from power. Wait for 45 seconds. Reseat DIMM(s). Reconnect it to power.
4. Make sure that DSA and BIOS/uEFI are at the latest level.

Related Links:

- IBM Support Website
- Latest level of DSA
- Latest level of BMC/IMM

201-812-000 Standalone Memory Test Aborted

Explanation: Memory test is not supported for this system.

Severity: Warning

Serviceable: No

Recoverable: No

Automatically notify Support: No

User response: Complete the following steps:

1. Perform the actions mentioned one at a time and try the test after each action.
2. If the problem remains, contact your technical-service representative.
3. Turn off the system and disconnect it from power. Wait for 45 seconds. Reseat DIMM(s). Reconnect it to power.
4. Make sure that DSA and BIOS/uEFI are at the latest level.

Related Links:

- IBM Support Website
- Latest level of DSA
- Latest level of BMC/IMM

201-812-001 Standalone Memory Test Aborted

Explanation: Memory test is not supported for this system.

Severity: Warning

Serviceable: No

Recoverable: No

Automatically notify Support: No

User response: Complete the following steps:

1. Perform the actions mentioned one at a time and try the test after each action.
2. If the problem remains, contact your technical-service representative.
3. Turn off the system and disconnect it from power. Wait for 45 seconds. Reseat DIMM(s). Reconnect it to power.
4. Make sure that DSA and BIOS/uEFI are at the latest level.

Related Links:

- IBM Support Website
- Latest level of DSA
- Latest level of BMC/IMM

201-812-002 Standalone Memory Test Aborted

Explanation: Memory test is not supported for this system.

Severity: Warning

Serviceable: No

Recoverable: No

Automatically notify Support: No

User response: Complete the following steps:

1. Perform the actions mentioned one at a time and try the test after each action.
2. If the problem remains, contact your technical-service representative.
3. Turn off the system and disconnect it from power. Wait for 45 seconds. Reseat DIMM(s). Reconnect it to power.
4. Make sure that DSA and BIOS/uEFI are at the latest level.

Related Links:

- IBM Support Website
- Latest level of DSA
- Latest level of BMC/IMM

201-812-003 Standalone Memory Test Aborted

Explanation: Memory test is not supported for this system.

Severity: Warning

Serviceable: No

Recoverable: No

Automatically notify Support: No

User response: Complete the following steps:

1. Perform the actions mentioned one at a time and try the test after each action.
2. If the problem remains, contact your technical-service representative.
3. Turn off the system and disconnect it from power. Wait for 45 seconds. Reseat DIMM(s). Reconnect it to power.
4. Make sure that DSA and BIOS/uEFI are at the latest level.

Related Links:

- IBM Support Website
- Latest level of DSA
- Latest level of BMC/IMM

201-813-000 Standalone Memory Test Aborted

Explanation: Chipset Error: Can not turn OFF ECC error reporting in CPU.

Severity: Warning

Serviceable: No

Recoverable: No

Automatically notify Support: No

User response: Complete the following steps:

1. Perform the actions mentioned one at a time and try the test after each action.
2. If the problem remains, contact your technical-service representative.
3. Turn off the system and disconnect it from power. Wait for 45 seconds. Reseat DIMM(s). Reconnect it to power.
4. Make sure that DSA and BIOS/uEFI are at the latest level.

Related Links:
- IBM Support Website
- Latest level of DSA
- Latest level of BMC/IMM

201-813-001 Standalone Memory Test Aborted

Explanation: Chipset Error: Can not turn OFF ECC error reporting in CPU.

Severity: Warning

Serviceable: No

Recoverable: No

Automatically notify Support: No

User response: Complete the following steps:
1. Perform the actions mentioned one at a time and try the test after each action.
2. If the problem remains, contact your technical-service representative.
3. Turn off the system and disconnect it from power. Wait for 45 seconds. Reseat DIMM(s). Reconnect it to power.
4. Make sure that DSA and BIOS/uEFI are at the latest level.

Related Links:
- IBM Support Website
- Latest level of DSA
- Latest level of BMC/IMM

201-813-002 Standalone Memory Test Aborted

Explanation: Chipset Error: Can not turn OFF ECC error reporting in CPU.

Severity: Warning

Serviceable: No

Recoverable: No

Automatically notify Support: No

User response: Complete the following steps:
1. Perform the actions mentioned one at a time and try the test after each action.
2. If the problem remains, contact your technical-service representative.
3. Turn off the system and disconnect it from power. Wait for 45 seconds. Reseat DIMM(s). Reconnect it to power.
4. Make sure that DSA and BIOS/uEFI are at the latest level.

Related Links:
- IBM Support Website
- Latest level of DSA
- Latest level of BMC/IMM

201-813-003 Standalone Memory Test Aborted

Explanation: Chipset Error: Can not turn OFF ECC error reporting in CPU.

Severity: Warning

Serviceable: No

Recoverable: No

Automatically notify Support: No

User response: Complete the following steps:

1. Perform the actions mentioned one at a time and try the test after each action.
2. If the problem remains, contact your technical-service representative.
3. Turn off the system and disconnect it from power. Wait for 45 seconds. Reseat DIMM(s). Reconnect it to power.
4. Make sure that DSA and BIOS/uEFI are at the latest level.

Related Links:

- IBM Support Website
- Latest level of DSA
- Latest level of BMC/IMM

201-814-000 Standalone Memory Test Aborted

Explanation: Chipset Error: Can not disable Scubbing feature for CPU.

Severity: Warning

Serviceable: No

Recoverable: No

Automatically notify Support: No

User response: Complete the following steps:

1. Perform the actions mentioned one at a time and try the test after each action.
2. If the problem remains, contact your technical-service representative.
3. Turn off the system and disconnect it from power. Wait for 45 seconds. Reseat DIMM(s). Reconnect it to power.
4. Make sure that DSA and BIOS/uEFI are at the latest level.

Related Links:

- IBM Support Website
- Latest level of DSA
- Latest level of BMC/IMM

201-814-001 Standalone Memory Test Aborted

Explanation: Chipset Error: Can not disable Scubbing feature for CPU.

Severity: Warning

Serviceable: No

Recoverable: No

Automatically notify Support: No

User response: Complete the following steps:

1. Perform the actions mentioned one at a time and try the test after each action.
2. If the problem remains, contact your technical-service representative.
3. Turn off the system and disconnect it from power. Wait for 45 seconds. Reseat DIMM(s). Reconnect it to power.
4. Make sure that DSA and BIOS/uEFI are at the latest level.

Related Links:

- IBM Support Website
- Latest level of DSA
- Latest level of BMC/IMM

201-814-002 Standalone Memory Test Aborted

Explanation: Chipset Error: Can not disable Scubbing feature for CPU.

Severity: Warning

Serviceable: No

Recoverable: No

Automatically notify Support: No

User response: Complete the following steps:

1. Perform the actions mentioned one at a time and try the test after each action.
2. If the problem remains, contact your technical-service representative.
3. Turn off the system and disconnect it from power. Wait for 45 seconds. Reseat DIMM(s). Reconnect it to power.
4. Make sure that DSA and BIOS/uEFI are at the latest level.

Related Links:

- IBM Support Website
- Latest level of DSA
- Latest level of BMC/IMM

201-814-003 Standalone Memory Test Aborted

Explanation: Chipset Error: Can not disable Scubbing feature for CPU.

Severity: Warning

Serviceable: No

Recoverable: No

Automatically notify Support: No

User response: Complete the following steps:

1. Perform the actions mentioned one at a time and try the test after each action.
2. If the problem remains, contact your technical-service representative.
3. Turn off the system and disconnect it from power. Wait for 45 seconds. Reseat DIMM(s). Reconnect it to power.
4. Make sure that DSA and BIOS/uEFI are at the latest level.

Related Links:

- IBM Support Website
- Latest level of DSA
- Latest level of BMC/IMM

201-815-000 Standalone Memory Test Aborted

Explanation: Program Error with Quick Memory Menu Option Selection.

Severity: Warning

Serviceable: No

Recoverable: No

Automatically notify Support: No

User response: Complete the following steps:

1. Perform the actions mentioned one at a time and try the test after each action.
2. If the problem remains, contact your technical-service representative.
3. Turn off the system and disconnect it from power. Wait for 45 seconds. Reseat DIMM(s). Reconnect it to power.
4. Make sure that DSA and BIOS/uEFI are at the latest level.

Related Links:
- IBM Support Website
- Latest level of DSA
- Latest level of BMC/IMM

201-815-001 Standalone Memory Test Aborted

Explanation: Program Error with Quick Memory Menu Option Selection.

Severity: Warning

Serviceable: No

Recoverable: No

Automatically notify Support: No

User response: Complete the following steps:
1. Perform the actions mentioned one at a time and try the test after each action.
2. If the problem remains, contact your technical-service representative.
3. Turn off the system and disconnect it from power. Wait for 45 seconds. Reseat DIMM(s). Reconnect it to power.
4. Make sure that DSA and BIOS/uEFI are at the latest level.

Related Links:
- IBM Support Website
- Latest level of DSA
- Latest level of BMC/IMM

201-815-002 Standalone Memory Test Aborted

Explanation: Program Error with Quick Memory Menu Option Selection.

Severity: Warning

Serviceable: No

Recoverable: No

Automatically notify Support: No

User response: Complete the following steps:
1. Perform the actions mentioned one at a time and try the test after each action.
2. If the problem remains, contact your technical-service representative.
3. Turn off the system and disconnect it from power. Wait for 45 seconds. Reseat DIMM(s). Reconnect it to power.
4. Make sure that DSA and BIOS/uEFI are at the latest level.

Related Links:
- IBM Support Website
- Latest level of DSA
- Latest level of BMC/IMM

201-815-003 Standalone Memory Test Aborted

Explanation: Program Error with Quick Memory Menu Option Selection.

Severity: Warning

Serviceable: No

Recoverable: No

Automatically notify Support: No

User response: Complete the following steps:

1. Perform the actions mentioned one at a time and try the test after each action.
2. If the problem remains, contact your technical-service representative.
3. Turn off the system and disconnect it from power. Wait for 45 seconds. Reseat DIMM(s). Reconnect it to power.
4. Make sure that DSA and BIOS/uEFI are at the latest level.

Related Links:

- IBM Support Website
- Latest level of DSA
- Latest level of BMC/IMM

201-816-000 Standalone Memory Test Aborted

Explanation: Program Error with Full Memory Menu Option Selection.

Severity: Warning

Serviceable: No

Recoverable: No

Automatically notify Support: No

User response: Complete the following steps:

1. Perform the actions mentioned one at a time and try the test after each action.
2. If the problem remains, contact your technical-service representative.
3. Turn off the system and disconnect it from power. Wait for 45 seconds. Reseat DIMM(s). Reconnect it to power.
4. Make sure that DSA and BIOS/uEFI are at the latest level.

Related Links:

- IBM Support Website
- Latest level of DSA
- Latest level of BMC/IMM

201-816-001 Standalone Memory Test Aborted

Explanation: Program Error with Full Memory Menu Option Selection.

Severity: Warning

Serviceable: No

Recoverable: No

Automatically notify Support: No

User response: Complete the following steps:

1. Perform the actions mentioned one at a time and try the test after each action.
2. If the problem remains, contact your technical-service representative.
3. Turn off the system and disconnect it from power. Wait for 45 seconds. Reseat DIMM(s). Reconnect it to power.
4. Make sure that DSA and BIOS/uEFI are at the latest level.

Related Links:

- IBM Support Website
- Latest level of DSA
- Latest level of BMC/IMM

201-816-002 Standalone Memory Test Aborted

Explanation: Program Error with Full Memory Menu Option Selection.

Severity: Warning

Serviceable: No

Recoverable: No

Automatically notify Support: No

User response: Complete the following steps:

1. Perform the actions mentioned one at a time and try the test after each action.
2. If the problem remains, contact your technical-service representative.
3. Turn off the system and disconnect it from power. Wait for 45 seconds. Reseat DIMM(s). Reconnect it to power.
4. Make sure that DSA and BIOS/uEFI are at the latest level.

Related Links:

- IBM Support Website
- Latest level of DSA
- Latest level of BMC/IMM

201-816-003 Standalone Memory Test Aborted

Explanation: Program Error with Full Memory Menu Option Selection.

Severity: Warning

Serviceable: No

Recoverable: No

Automatically notify Support: No

User response: Complete the following steps:

1. Perform the actions mentioned one at a time and try the test after each action.
2. If the problem remains, contact your technical-service representative.
3. Turn off the system and disconnect it from power. Wait for 45 seconds. Reseat DIMM(s). Reconnect it to power.
4. Make sure that DSA and BIOS/uEFI are at the latest level.

Related Links:

- IBM Support Website
- Latest level of DSA
- Latest level of BMC/IMM

201-818-000 Standalone Memory Test Aborted

Explanation: Unable to Locate SMBIOS key "_SM_".

Severity: Warning

Serviceable: No

Recoverable: No

Automatically notify Support: No

User response: Complete the following steps:

1. Perform the actions mentioned one at a time and try the test after each action.
2. If the problem remains, contact your technical-service representative.
3. Turn off the system and disconnect it from power. Wait for 45 seconds. Reseat DIMM(s). Reconnect it to power.
4. Make sure that DSA and BIOS/uEFI are at the latest level.

Related Links:
- IBM Support Website
- Latest level of DSA
- Latest level of BMC/IMM

201-818-001 Standalone Memory Test Aborted

Explanation: Unable to Locate SMBIOS key "_SM_".

Severity: Warning

Serviceable: No

Recoverable: No

Automatically notify Support: No

User response: Complete the following steps:
1. Perform the actions mentioned one at a time and try the test after each action.
2. If the problem remains, contact your technical-service representative.
3. Turn off the system and disconnect it from power. Wait for 45 seconds. Reseat DIMM(s). Reconnect it to power.
4. Make sure that DSA and BIOS/uEFI are at the latest level.

Related Links:
- IBM Support Website
- Latest level of DSA
- Latest level of BMC/IMM

201-818-002 Standalone Memory Test Aborted

Explanation: Unable to Locate SMBIOS key "_SM_".

Severity: Warning

Serviceable: No

Recoverable: No

Automatically notify Support: No

User response: Complete the following steps:
1. Perform the actions mentioned one at a time and try the test after each action.
2. If the problem remains, contact your technical-service representative.
3. Turn off the system and disconnect it from power. Wait for 45 seconds. Reseat DIMM(s). Reconnect it to power.
4. Make sure that DSA and BIOS/uEFI are at the latest level.

Related Links:
- IBM Support Website
- Latest level of DSA
- Latest level of BMC/IMM

201-818-003 Standalone Memory Test Aborted

Explanation: Unable to Locate SMBIOS key "_SM_".

Severity: Warning

Serviceable: No

Recoverable: No

Automatically notify Support: No

User response: Complete the following steps:

1. Perform the actions mentioned one at a time and try the test after each action.
2. If the problem remains, contact your technical-service representative.
3. Turn off the system and disconnect it from power. Wait for 45 seconds. Reseat DIMM(s). Reconnect it to power.
4. Make sure that DSA and BIOS/uEFI are at the latest level.

Related Links:

- IBM Support Website
- Latest level of DSA
- Latest level of BMC/IMM

201-819-000 Standalone Memory Test Aborted

Explanation: The start-end address ranges in the restricted area of the memory.

Severity: Warning

Serviceable: No

Recoverable: No

Automatically notify Support: No

User response: Complete the following steps:

1. Perform the actions mentioned one at a time and try the test after each action.
2. If the problem remains, contact your technical-service representative.
3. Turn off the system and disconnect it from power. Wait for 45 seconds. Reseat DIMM(s). Reconnect it to power.
4. Make sure that DSA and BIOS/uEFI are at the latest level.

Related Links:

- IBM Support Website
- Latest level of DSA
- Latest level of BMC/IMM

201-819-001 Standalone Memory Test Aborted

Explanation: The start-end address ranges in the restricted area of the memory.

Severity: Warning

Serviceable: No

Recoverable: No

Automatically notify Support: No

User response: Complete the following steps:

1. Perform the actions mentioned one at a time and try the test after each action.
2. If the problem remains, contact your technical-service representative.
3. Turn off the system and disconnect it from power. Wait for 45 seconds. Reseat DIMM(s). Reconnect it to power.
4. Make sure that DSA and BIOS/uEFI are at the latest level.

Related Links:

- IBM Support Website
- Latest level of DSA
- Latest level of BMC/IMM

201-819-002 Standalone Memory Test Aborted

Explanation: The start-end address ranges in the restricted area of the memory.

Severity: Warning

Serviceable: No

Recoverable: No

Automatically notify Support: No

User response: Complete the following steps:

1. Perform the actions mentioned one at a time and try the test after each action.
2. If the problem remains, contact your technical-service representative.
3. Turn off the system and disconnect it from power. Wait for 45 seconds. Reseat DIMM(s). Reconnect it to power.
4. Make sure that DSA and BIOS/uEFI are at the latest level.

Related Links:

- IBM Support Website
- Latest level of DSA
- Latest level of BMC/IMM

201-819-003 Standalone Memory Test Aborted

Explanation: The start-end address ranges in the restricted area of the memory.

Severity: Warning

Serviceable: No

Recoverable: No

Automatically notify Support: No

User response: Complete the following steps:

1. Perform the actions mentioned one at a time and try the test after each action.
2. If the problem remains, contact your technical-service representative.
3. Turn off the system and disconnect it from power. Wait for 45 seconds. Reseat DIMM(s). Reconnect it to power.
4. Make sure that DSA and BIOS/uEFI are at the latest level.

Related Links:

- IBM Support Website
- Latest level of DSA
- Latest level of BMC/IMM

201-820-000 Standalone Memory Test Aborted

Explanation: Memory Upper limit is less than 16 Mbytes.

Severity: Warning

Serviceable: No

Recoverable: No

Automatically notify Support: No

User response: Complete the following steps:

1. Perform the actions mentioned one at a time and try the test after each action.
2. If the problem remains, contact your technical-service representative.
3. Turn off the system and disconnect it from power. Wait for 45 seconds. Reseat DIMM(s). Reconnect it to power.
4. Make sure that DSA and BIOS/uEFI are at the latest level.

Related Links:

- IBM Support Website
- Latest level of DSA
- Latest level of BMC/IMM

201-820-001 Standalone Memory Test Aborted

Explanation: Memory Upper limit is less than 16 Mbytes.

Severity: Warning

Serviceable: No

Recoverable: No

Automatically notify Support: No

User response: Complete the following steps:

1. Perform the actions mentioned one at a time and try the test after each action.
2. If the problem remains, contact your technical-service representative.
3. Turn off the system and disconnect it from power. Wait for 45 seconds. Reseat DIMM(s). Reconnect it to power.
4. Make sure that DSA and BIOS/uEFI are at the latest level.

Related Links:

- IBM Support Website
- Latest level of DSA
- Latest level of BMC/IMM

201-820-002 Standalone Memory Test Aborted

Explanation: Memory Upper limit is less than 16 Mbytes.

Severity: Warning

Serviceable: No

Recoverable: No

Automatically notify Support: No

User response: Complete the following steps:

1. Perform the actions mentioned one at a time and try the test after each action.
2. If the problem remains, contact your technical-service representative.
3. Turn off the system and disconnect it from power. Wait for 45 seconds. Reseat DIMM(s). Reconnect it to power.
4. Make sure that DSA and BIOS/uEFI are at the latest level.

Related Links:

- IBM Support Website
- Latest level of DSA
- Latest level of BMC/IMM

201-820-003 Standalone Memory Test Aborted

Explanation: Memory Upper limit is less than 16 Mbytes.

Severity: Warning

Serviceable: No

Recoverable: No

Automatically notify Support: No

User response: Complete the following steps:

1. Perform the actions mentioned one at a time and try the test after each action.
2. If the problem remains, contact your technical-service representative.
3. Turn off the system and disconnect it from power. Wait for 45 seconds. Reseat DIMM(s). Reconnect it to power.
4. Make sure that DSA and BIOS/uEFI are at the latest level.

Related Links:

- IBM Support Website
- Latest level of DSA
- Latest level of BMC/IMM

201-821-000 Standalone Memory Test Aborted

Explanation: Variable range MTRR registers are larger than fixed range MTRR registers.

Severity: Warning

Serviceable: No

Recoverable: No

Automatically notify Support: No

User response: Complete the following steps:

1. Perform the actions mentioned one at a time and try the test after each action.
2. If the problem remains, contact your technical-service representative.
3. Turn off the system and disconnect it from power. Wait for 45 seconds. Reseat DIMM(s). Reconnect it to power.
4. Make sure that DSA and BIOS/uEFI are at the latest level.

Related Links:

- IBM Support Website
- Latest level of DSA
- Latest level of BMC/IMM

201-821-001 Standalone Memory Test Aborted

Explanation: Variable range MTRR registers are larger than fixed range MTRR registers.

Severity: Warning

Serviceable: No

Recoverable: No

Automatically notify Support: No

User response: Complete the following steps:

1. Perform the actions mentioned one at a time and try the test after each action.
2. If the problem remains, contact your technical-service representative.
3. Turn off the system and disconnect it from power. Wait for 45 seconds. Reseat DIMM(s). Reconnect it to power.
4. Make sure that DSA and BIOS/uEFI are at the latest level.

Related Links:

- IBM Support Website
- Latest level of DSA
- Latest level of BMC/IMM

201-821-002 Standalone Memory Test Aborted

Explanation: Variable range MTRR registers are larger than fixed range MTRR registers.

Severity: Warning

Serviceable: No

Recoverable: No

Automatically notify Support: No

User response: Complete the following steps:

1. Perform the actions mentioned one at a time and try the test after each action.
2. If the problem remains, contact your technical-service representative.
3. Turn off the system and disconnect it from power. Wait for 45 seconds. Reseat DIMM(s). Reconnect it to power.
4. Make sure that DSA and BIOS/uEFI are at the latest level.

Related Links:

- IBM Support Website
- Latest level of DSA
- Latest level of BMC/IMM

201-821-003 Standalone Memory Test Aborted

Explanation: Variable range MTRR registers are larger than fixed range MTRR registers.

Severity: Warning

Serviceable: No

Recoverable: No

Automatically notify Support: No

User response: Complete the following steps:

1. Perform the actions mentioned one at a time and try the test after each action.
2. If the problem remains, contact your technical-service representative.
3. Turn off the system and disconnect it from power. Wait for 45 seconds. Reseat DIMM(s). Reconnect it to power.
4. Make sure that DSA and BIOS/uEFI are at the latest level.

Related Links:

- IBM Support Website
- Latest level of DSA
- Latest level of BMC/IMM

201-822-000 Standalone Memory Test Aborted

Explanation: Invalid MTRR service request.

Severity: Warning

Serviceable: No

Recoverable: No

Automatically notify Support: No

User response: Complete the following steps:

1. Perform the actions mentioned one at a time and try the test after each action.
2. If the problem remains, contact your technical-service representative.
3. Turn off the system and disconnect it from power. Wait for 45 seconds. Reseat DIMM(s). Reconnect it to power.
4. Make sure that DSA and BIOS/uEFI are at the latest level.

Related Links:
- IBM Support Website
- Latest level of DSA
- Latest level of BMC/IMM

201-822-001 Standalone Memory Test Aborted

Explanation: Invalid MTRR service request.

Severity: Warning

Serviceable: No

Recoverable: No

Automatically notify Support: No

User response: Complete the following steps:
1. Perform the actions mentioned one at a time and try the test after each action.
2. If the problem remains, contact your technical-service representative.
3. Turn off the system and disconnect it from power. Wait for 45 seconds. Reseat DIMM(s). Reconnect it to power.
4. Make sure that DSA and BIOS/uEFI are at the latest level.

Related Links:
- IBM Support Website
- Latest level of DSA
- Latest level of BMC/IMM

201-822-002 Standalone Memory Test Aborted

Explanation: Invalid MTRR service request.

Severity: Warning

Serviceable: No

Recoverable: No

Automatically notify Support: No

User response: Complete the following steps:
1. Perform the actions mentioned one at a time and try the test after each action.
2. If the problem remains, contact your technical-service representative.
3. Turn off the system and disconnect it from power. Wait for 45 seconds. Reseat DIMM(s). Reconnect it to power.
4. Make sure that DSA and BIOS/uEFI are at the latest level.

Related Links:
- IBM Support Website
- Latest level of DSA
- Latest level of BMC/IMM

201-822-003 Standalone Memory Test Aborted

Explanation: Invalid MTRR service request.

Severity: Warning

Serviceable: No

Recoverable: No

Automatically notify Support: No

User response: Complete the following steps:

1. Perform the actions mentioned one at a time and try the test after each action.
2. If the problem remains, contact your technical-service representative.
3. Turn off the system and disconnect it from power. Wait for 45 seconds. Reseat DIMM(s). Reconnect it to power.
4. Make sure that DSA and BIOS/uEFI are at the latest level.

Related Links:

- IBM Support Website
- Latest level of DSA
- Latest level of BMC/IMM

201-824-000 Standalone Memory Test Aborted

Explanation: Node Interleave feature must be OFF. Go to Setup and disable Node Interleave option and then re-run the test.

Severity: Warning

Serviceable: No

Recoverable: No

Automatically notify Support: No

User response: Complete the following steps:

1. Perform the actions mentioned one at a time and try the test after each action.
2. If the problem remains, contact your technical-service representative.
3. Turn off the system and disconnect it from power. Wait for 45 seconds. Reseat DIMM(s). Reconnect it to power.
4. Make sure that DSA and BIOS/uEFI are at the latest level.

Related Links:

- IBM Support Website
- Latest level of DSA
- Latest level of BMC/IMM

201-824-001 Standalone Memory Test Aborted

Explanation: Node Interleave feature must be OFF. Go to Setup and disable Node Interleave option and then re-run the test.

Severity: Warning

Serviceable: No

Recoverable: No

Automatically notify Support: No

User response: Complete the following steps:

1. Perform the actions mentioned one at a time and try the test after each action.
2. If the problem remains, contact your technical-service representative.
3. Turn off the system and disconnect it from power. Wait for 45 seconds. Reseat DIMM(s). Reconnect it to power.
4. Make sure that DSA and BIOS/uEFI are at the latest level.

Related Links:

- IBM Support Website
- Latest level of DSA
- Latest level of BMC/IMM

201-824-002 Standalone Memory Test Aborted

Explanation: Node Interleave feature must be OFF. Go to Setup and disable Node Interleave option and then re-run the test.

Severity: Warning

Serviceable: No

Recoverable: No

Automatically notify Support: No

User response: Complete the following steps:

1. Perform the actions mentioned one at a time and try the test after each action.
2. If the problem remains, contact your technical-service representative.
3. Turn off the system and disconnect it from power. Wait for 45 seconds. Reseat DIMM(s). Reconnect it to power.
4. Make sure that DSA and BIOS/uEFI are at the latest level.

Related Links:

- IBM Support Website
- Latest level of DSA
- Latest level of BMC/IMM

201-824-003 Standalone Memory Test Aborted

Explanation: Node Interleave feature must be OFF. Go to Setup and disable Node Interleave option and then re-run the test.

Severity: Warning

Serviceable: No

Recoverable: No

Automatically notify Support: No

User response: Complete the following steps:

1. Perform the actions mentioned one at a time and try the test after each action.
2. If the problem remains, contact your technical-service representative.
3. Turn off the system and disconnect it from power. Wait for 45 seconds. Reseat DIMM(s). Reconnect it to power.
4. Make sure that DSA and BIOS/uEFI are at the latest level.

Related Links:

- IBM Support Website
- Latest level of DSA
- Latest level of BMC/IMM

201-826-000 Standalone Memory Test Aborted

Explanation: BIOS: Memory Controller has been disabled. Go to Setup and Enable Memory Controller.

Severity: Warning

Serviceable: No

Recoverable: No

Automatically notify Support: No

User response: Complete the following steps:

1. Perform the actions mentioned one at a time and try the test after each action.
2. If the problem remains, contact your technical-service representative.
3. Turn off the system and disconnect it from power. Wait for 45 seconds. Reseat DIMM(s). Reconnect it to power.

4. Make sure that DSA and BIOS/uEFI are at the latest level.

Related Links:

- IBM Support Website
- Latest level of DSA
- Latest level of BMC/IMM

201-826-001 Standalone Memory Test Aborted

Explanation: BIOS: Memory Controller has been disabled. Go to Setup and Enable Memory Controller.

Severity: Warning

Serviceable: No

Recoverable: No

Automatically notify Support: No

User response: Complete the following steps:

1. Perform the actions mentioned one at a time and try the test after each action.
2. If the problem remains, contact your technical-service representative.
3. Turn off the system and disconnect it from power. Wait for 45 seconds. Reseat DIMM(s). Reconnect it to power.
4. Make sure that DSA and BIOS/uEFI are at the latest level.

Related Links:

- IBM Support Website
- Latest level of DSA
- Latest level of BMC/IMM

201-826-002 Standalone Memory Test Aborted

Explanation: BIOS: Memory Controller has been disabled. Go to Setup and Enable Memory Controller.

Severity: Warning

Serviceable: No

Recoverable: No

Automatically notify Support: No

User response: Complete the following steps:

1. Perform the actions mentioned one at a time and try the test after each action.
2. If the problem remains, contact your technical-service representative.
3. Turn off the system and disconnect it from power. Wait for 45 seconds. Reseat DIMM(s). Reconnect it to power.
4. Make sure that DSA and BIOS/uEFI are at the latest level.

Related Links:

- IBM Support Website
- Latest level of DSA
- Latest level of BMC/IMM

201-826-003 Standalone Memory Test Aborted

Explanation: BIOS: Memory Controller has been disabled. Go to Setup and Enable Memory Controller.

Severity: Warning

Serviceable: No

Recoverable: No

Automatically notify Support: No

User response: Complete the following steps:

1. Perform the actions mentioned one at a time and try the test after each action.
2. If the problem remains, contact your technical-service representative.
3. Turn off the system and disconnect it from power. Wait for 45 seconds. Reseat DIMM(s). Reconnect it to power.
4. Make sure that DSA and BIOS/uEFI are at the latest level.

Related Links:

- IBM Support Website
- Latest level of DSA
- Latest level of BMC/IMM

201-827-000 Standalone Memory Test Aborted

Explanation: BIOS: ECC function has been disabled by BIOS. Go to Setup and enable ECC generation.

Severity: Warning

Serviceable: No

Recoverable: No

Automatically notify Support: No

User response: Complete the following steps:

1. Perform the actions mentioned one at a time and try the test after each action.
2. If the problem remains, contact your technical-service representative.
3. Turn off the system and disconnect it from power. Wait for 45 seconds. Reseat DIMM(s). Reconnect it to power.
4. Make sure that DSA and BIOS/uEFI are at the latest level.

Related Links:

- IBM Support Website
- Latest level of DSA
- Latest level of BMC/IMM

201-827-001 Standalone Memory Test Aborted

Explanation: BIOS: ECC function has been disabled by BIOS. Go to Setup and enable ECC generation.

Severity: Warning

Serviceable: No

Recoverable: No

Automatically notify Support: No

User response: Complete the following steps:

1. Perform the actions mentioned one at a time and try the test after each action.
2. If the problem remains, contact your technical-service representative.
3. Turn off the system and disconnect it from power. Wait for 45 seconds. Reseat DIMM(s). Reconnect it to power.
4. Make sure that DSA and BIOS/uEFI are at the latest level.

Related Links:

- IBM Support Website
- Latest level of DSA
- Latest level of BMC/IMM

201-827-002 Standalone Memory Test Aborted

Explanation: BIOS: ECC function has been disabled by BIOS. Go to Setup and enable ECC generation.

Severity: Warning

Serviceable: No

Recoverable: No

Automatically notify Support: No

User response: Complete the following steps:

1. Perform the actions mentioned one at a time and try the test after each action.
2. If the problem remains, contact your technical-service representative.
3. Turn off the system and disconnect it from power. Wait for 45 seconds. Reseat DIMM(s). Reconnect it to power.
4. Make sure that DSA and BIOS/uEFI are at the latest level.

Related Links:

- IBM Support Website
- Latest level of DSA
- Latest level of BMC/IMM

201-827-003 Standalone Memory Test Aborted

Explanation: BIOS: ECC function has been disabled by BIOS. Go to Setup and enable ECC generation.

Severity: Warning

Serviceable: No

Recoverable: No

Automatically notify Support: No

User response: Complete the following steps:

1. Perform the actions mentioned one at a time and try the test after each action.
2. If the problem remains, contact your technical-service representative.
3. Turn off the system and disconnect it from power. Wait for 45 seconds. Reseat DIMM(s). Reconnect it to power.
4. Make sure that DSA and BIOS/uEFI are at the latest level.

Related Links:

- IBM Support Website
- Latest level of DSA
- Latest level of BMC/IMM

201-844-000 Standalone Memory Test Aborted

Explanation: Chipset Error: Problem in masking MSR machine check control MASK registers.

Severity: Warning

Serviceable: No

Recoverable: No

Automatically notify Support: No

User response: Complete the following steps:

1. Perform the actions mentioned one at a time and try the test after each action.
2. If the problem remains, contact your technical-service representative.
3. Turn off the system and disconnect it from power. Wait for 45 seconds. Reseat DIMM(s). Reconnect it to power.
4. Make sure that DSA and BIOS/uEFI are at the latest level.

Related Links:
- IBM Support Website
- Latest level of DSA
- Latest level of BMC/IMM

201-844-001 Standalone Memory Test Aborted

Explanation: Chipset Error: Problem in masking MSR machine check control MASK registers.

Severity: Warning

Serviceable: No

Recoverable: No

Automatically notify Support: No

User response: Complete the following steps:
1. Perform the actions mentioned one at a time and try the test after each action.
2. If the problem remains, contact your technical-service representative.
3. Turn off the system and disconnect it from power. Wait for 45 seconds. Reseat DIMM(s). Reconnect it to power.
4. Make sure that DSA and BIOS/uEFI are at the latest level.

Related Links:
- IBM Support Website
- Latest level of DSA
- Latest level of BMC/IMM

201-844-002 Standalone Memory Test Aborted

Explanation: Chipset Error: Problem in masking MSR machine check control MASK registers.

Severity: Warning

Serviceable: No

Recoverable: No

Automatically notify Support: No

User response: Complete the following steps:
1. Perform the actions mentioned one at a time and try the test after each action.
2. If the problem remains, contact your technical-service representative.
3. Turn off the system and disconnect it from power. Wait for 45 seconds. Reseat DIMM(s). Reconnect it to power.
4. Make sure that DSA and BIOS/uEFI are at the latest level.

Related Links:
- IBM Support Website
- Latest level of DSA
- Latest level of BMC/IMM

201-844-003 Standalone Memory Test Aborted

Explanation: Chipset Error: Problem in masking MSR machine check control MASK registers.

Severity: Warning

Serviceable: No

Recoverable: No

Automatically notify Support: No

User response: Complete the following steps:

1. Perform the actions mentioned one at a time and try the test after each action.
2. If the problem remains, contact your technical-service representative.
3. Turn off the system and disconnect it from power. Wait for 45 seconds. Reseat DIMM(s). Reconnect it to power.
4. Make sure that DSA and BIOS/uEFI are at the latest level.

Related Links:

- IBM Support Website
- Latest level of DSA
- Latest level of BMC/IMM

201-845-000 Standalone Memory Test Aborted

Explanation: Chipset Error: Problem clearing MSR machine check control registers.

Severity: Warning

Serviceable: No

Recoverable: No

Automatically notify Support: No

User response: Complete the following steps:

1. Perform the actions mentioned one at a time and try the test after each action.
2. If the problem remains, contact your technical-service representative.
3. Turn off the system and disconnect it from power. Wait for 45 seconds. Reseat DIMM(s). Reconnect it to power.
4. Make sure that DSA and BIOS/uEFI are at the latest level.

Related Links:

- IBM Support Website
- Latest level of DSA
- Latest level of BMC/IMM

201-845-001 Standalone Memory Test Aborted

Explanation: Chipset Error: Problem clearing MSR machine check control registers.

Severity: Warning

Serviceable: No

Recoverable: No

Automatically notify Support: No

User response: Complete the following steps:

1. Perform the actions mentioned one at a time and try the test after each action.
2. If the problem remains, contact your technical-service representative.
3. Turn off the system and disconnect it from power. Wait for 45 seconds. Reseat DIMM(s). Reconnect it to power.
4. Make sure that DSA and BIOS/uEFI are at the latest level.

Related Links:

- IBM Support Website
- Latest level of DSA
- Latest level of BMC/IMM

201-845-002 Standalone Memory Test Aborted

Explanation: Chipset Error: Problem clearing MSR machine check control registers.

Severity: Warning

Serviceable: No

Recoverable: No

Automatically notify Support: No

User response: Complete the following steps:

1. Perform the actions mentioned one at a time and try the test after each action.
2. If the problem remains, contact your technical-service representative.
3. Turn off the system and disconnect it from power. Wait for 45 seconds. Reseat DIMM(s). Reconnect it to power.
4. Make sure that DSA and BIOS/uEFI are at the latest level.

Related Links:

- IBM Support Website
- Latest level of DSA
- Latest level of BMC/IMM

201-845-003 Standalone Memory Test Aborted

Explanation: Chipset Error: Problem clearing MSR machine check control registers.

Severity: Warning

Serviceable: No

Recoverable: No

Automatically notify Support: No

User response: Complete the following steps:

1. Perform the actions mentioned one at a time and try the test after each action.
2. If the problem remains, contact your technical-service representative.
3. Turn off the system and disconnect it from power. Wait for 45 seconds. Reseat DIMM(s). Reconnect it to power.
4. Make sure that DSA and BIOS/uEFI are at the latest level.

Related Links:

- IBM Support Website
- Latest level of DSA
- Latest level of BMC/IMM

201-859-000 Standalone Memory Test Aborted

Explanation: INVALID XSECSRAT type.

Severity: Warning

Serviceable: No

Recoverable: No

Automatically notify Support: No

User response: Complete the following steps:

1. Perform the actions mentioned one at a time and try the test after each action.
2. If the problem remains, contact your technical-service representative.
3. Turn off the system and disconnect it from power. Wait for 45 seconds. Reseat DIMM(s). Reconnect it to power.
4. Make sure that DSA and BIOS/uEFI are at the latest level.

Related Links:

- IBM Support Website
- Latest level of DSA
- Latest level of BMC/IMM

201-859-001 Standalone Memory Test Aborted

Explanation: INVALID XSECSRAT type.

Severity: Warning

Serviceable: No

Recoverable: No

Automatically notify Support: No

User response: Complete the following steps:

1. Perform the actions mentioned one at a time and try the test after each action.
2. If the problem remains, contact your technical-service representative.
3. Turn off the system and disconnect it from power. Wait for 45 seconds. Reseat DIMM(s). Reconnect it to power.
4. Make sure that DSA and BIOS/uEFI are at the latest level.

Related Links:

- IBM Support Website
- Latest level of DSA
- Latest level of BMC/IMM

201-859-002 Standalone Memory Test Aborted

Explanation: INVALID XSECSRAT type.

Severity: Warning

Serviceable: No

Recoverable: No

Automatically notify Support: No

User response: Complete the following steps:

1. Perform the actions mentioned one at a time and try the test after each action.
2. If the problem remains, contact your technical-service representative.
3. Turn off the system and disconnect it from power. Wait for 45 seconds. Reseat DIMM(s). Reconnect it to power.
4. Make sure that DSA and BIOS/uEFI are at the latest level.

Related Links:

- IBM Support Website
- Latest level of DSA
- Latest level of BMC/IMM

201-859-003 Standalone Memory Test Aborted

Explanation: INVALID XSECSRAT type.

Severity: Warning

Serviceable: No

Recoverable: No

Automatically notify Support: No

User response: Complete the following steps:

1. Perform the actions mentioned one at a time and try the test after each action.
2. If the problem remains, contact your technical-service representative.
3. Turn off the system and disconnect it from power. Wait for 45 seconds. Reseat DIMM(s). Reconnect it to power.
4. Make sure that DSA and BIOS/uEFI are at the latest level.

Related Links:

- IBM Support Website
- Latest level of DSA
- Latest level of BMC/IMM

201-860-000 Standalone Memory Test Aborted

Explanation: No OEM0 type 1 found.

Severity: Warning

Serviceable: No

Recoverable: No

Automatically notify Support: No

User response: Complete the following steps:

1. Perform the actions mentioned one at a time and try the test after each action.
2. If the problem remains, contact your technical-service representative.
3. Turn off the system and disconnect it from power. Wait for 45 seconds. Reseat DIMM(s). Reconnect it to power.
4. Make sure that DSA and BIOS/uEFI are at the latest level.

Related Links:

- IBM Support Website
- Latest level of DSA
- Latest level of BMC/IMM

201-860-001 Standalone Memory Test Aborted

Explanation: No OEM0 type 1 found.

Severity: Warning

Serviceable: No

Recoverable: No

Automatically notify Support: No

User response: Complete the following steps:

1. Perform the actions mentioned one at a time and try the test after each action.
2. If the problem remains, contact your technical-service representative.
3. Turn off the system and disconnect it from power. Wait for 45 seconds. Reseat DIMM(s). Reconnect it to power.
4. Make sure that DSA and BIOS/uEFI are at the latest level.

Related Links:

- IBM Support Website
- Latest level of DSA
- Latest level of BMC/IMM

201-860-002 Standalone Memory Test Aborted

Explanation: No OEM0 type 1 found.

Severity: Warning

Serviceable: No

Recoverable: No

Automatically notify Support: No

User response: Complete the following steps:

1. Perform the actions mentioned one at a time and try the test after each action.
2. If the problem remains, contact your technical-service representative.
3. Turn off the system and disconnect it from power. Wait for 45 seconds. Reseat DIMM(s). Reconnect it to power.
4. Make sure that DSA and BIOS/uEFI are at the latest level.

Related Links:

- IBM Support Website
- Latest level of DSA
- Latest level of BMC/IMM

201-860-003 Standalone Memory Test Aborted

Explanation: No OEM0 type 1 found.

Severity: Warning

Serviceable: No

Recoverable: No

Automatically notify Support: No

User response: Complete the following steps:

1. Perform the actions mentioned one at a time and try the test after each action.
2. If the problem remains, contact your technical-service representative.
3. Turn off the system and disconnect it from power. Wait for 45 seconds. Reseat DIMM(s). Reconnect it to power.
4. Make sure that DSA and BIOS/uEFI are at the latest level.

Related Links:

- IBM Support Website
- Latest level of DSA
- Latest level of BMC/IMM

201-861-000 Standalone Memory Test Aborted

Explanation: No SRAT type 1 found.

Severity: Warning

Serviceable: No

Recoverable: No

Automatically notify Support: No

User response: Complete the following steps:

1. Perform the actions mentioned one at a time and try the test after each action.
2. If the problem remains, contact your technical-service representative.
3. Turn off the system and disconnect it from power. Wait for 45 seconds. Reseat DIMM(s). Reconnect it to power.
4. Make sure that DSA and BIOS/uEFI are at the latest level.

Related Links:
- IBM Support Website
- Latest level of DSA
- Latest level of BMC/IMM

201-861-001 Standalone Memory Test Aborted

Explanation: No SRAT type 1 found.

Severity: Warning

Serviceable: No

Recoverable: No

Automatically notify Support: No

User response: Complete the following steps:
1. Perform the actions mentioned one at a time and try the test after each action.
2. If the problem remains, contact your technical-service representative.
3. Turn off the system and disconnect it from power. Wait for 45 seconds. Reseat DIMM(s). Reconnect it to power.
4. Make sure that DSA and BIOS/uEFI are at the latest level.

Related Links:
- IBM Support Website
- Latest level of DSA
- Latest level of BMC/IMM

201-861-002 Standalone Memory Test Aborted

Explanation: No SRAT type 1 found.

Severity: Warning

Serviceable: No

Recoverable: No

Automatically notify Support: No

User response: Complete the following steps:
1. Perform the actions mentioned one at a time and try the test after each action.
2. If the problem remains, contact your technical-service representative.
3. Turn off the system and disconnect it from power. Wait for 45 seconds. Reseat DIMM(s). Reconnect it to power.
4. Make sure that DSA and BIOS/uEFI are at the latest level.

Related Links:
- IBM Support Website
- Latest level of DSA
- Latest level of BMC/IMM

201-861-003 Standalone Memory Test Aborted

Explanation: No SRAT type 1 found.

Severity: Warning

Serviceable: No

Recoverable: No

Automatically notify Support: No

User response: Complete the following steps:

1. Perform the actions mentioned one at a time and try the test after each action.
2. If the problem remains, contact your technical-service representative.
3. Turn off the system and disconnect it from power. Wait for 45 seconds. Reseat DIMM(s). Reconnect it to power.
4. Make sure that DSA and BIOS/uEFI are at the latest level.

Related Links:

- IBM Support Website
- Latest level of DSA
- Latest level of BMC/IMM

201-862-000 Standalone Memory Test Aborted

Explanation: No OEM1 structure found.

Severity: Warning

Serviceable: No

Recoverable: No

Automatically notify Support: No

User response: Complete the following steps:

1. Perform the actions mentioned one at a time and try the test after each action.
2. If the problem remains, contact your technical-service representative.
3. Turn off the system and disconnect it from power. Wait for 45 seconds. Reseat DIMM(s). Reconnect it to power.
4. Make sure that DSA and BIOS/uEFI are at the latest level.

Related Links:

- IBM Support Website
- Latest level of DSA
- Latest level of BMC/IMM

201-862-001 Standalone Memory Test Aborted

Explanation: No OEM1 structure found.

Severity: Warning

Serviceable: No

Recoverable: No

Automatically notify Support: No

User response: Complete the following steps:

1. Perform the actions mentioned one at a time and try the test after each action.
2. If the problem remains, contact your technical-service representative.
3. Turn off the system and disconnect it from power. Wait for 45 seconds. Reseat DIMM(s). Reconnect it to power.
4. Make sure that DSA and BIOS/uEFI are at the latest level.

Related Links:

- IBM Support Website
- Latest level of DSA
- Latest level of BMC/IMM

201-862-002 Standalone Memory Test Aborted

Explanation: No OEM1 structure found.

Severity: Warning

Serviceable: No

Recoverable: No

Automatically notify Support: No

User response: Complete the following steps:

1. Perform the actions mentioned one at a time and try the test after each action.
2. If the problem remains, contact your technical-service representative.
3. Turn off the system and disconnect it from power. Wait for 45 seconds. Reseat DIMM(s). Reconnect it to power.
4. Make sure that DSA and BIOS/uEFI are at the latest level.

Related Links:

- IBM Support Website
- Latest level of DSA
- Latest level of BMC/IMM

201-862-003 Standalone Memory Test Aborted

Explanation: No OEM1 structure found.

Severity: Warning

Serviceable: No

Recoverable: No

Automatically notify Support: No

User response: Complete the following steps:

1. Perform the actions mentioned one at a time and try the test after each action.
2. If the problem remains, contact your technical-service representative.
3. Turn off the system and disconnect it from power. Wait for 45 seconds. Reseat DIMM(s). Reconnect it to power.
4. Make sure that DSA and BIOS/uEFI are at the latest level.

Related Links:

- IBM Support Website
- Latest level of DSA
- Latest level of BMC/IMM

201-863-000 Standalone Memory Test Aborted

Explanation: No IBMERROR key in OEM1 structure.

Severity: Warning

Serviceable: No

Recoverable: No

Automatically notify Support: No

User response: Complete the following steps:

1. Perform the actions mentioned one at a time and try the test after each action.
2. If the problem remains, contact your technical-service representative.
3. Turn off the system and disconnect it from power. Wait for 45 seconds. Reseat DIMM(s). Reconnect it to power.
4. Make sure that DSA and BIOS/uEFI are at the latest level.

Related Links:
- IBM Support Website
- Latest level of DSA
- Latest level of BMC/IMM

201-863-001 Standalone Memory Test Aborted

Explanation: No IBMERROR key in OEM1 structure.

Severity: Warning

Serviceable: No

Recoverable: No

Automatically notify Support: No

User response: Complete the following steps:
1. Perform the actions mentioned one at a time and try the test after each action.
2. If the problem remains, contact your technical-service representative.
3. Turn off the system and disconnect it from power. Wait for 45 seconds. Reseat DIMM(s). Reconnect it to power.
4. Make sure that DSA and BIOS/uEFI are at the latest level.

Related Links:
- IBM Support Website
- Latest level of DSA
- Latest level of BMC/IMM

201-863-002 Standalone Memory Test Aborted

Explanation: No IBMERROR key in OEM1 structure.

Severity: Warning

Serviceable: No

Recoverable: No

Automatically notify Support: No

User response: Complete the following steps:
1. Perform the actions mentioned one at a time and try the test after each action.
2. If the problem remains, contact your technical-service representative.
3. Turn off the system and disconnect it from power. Wait for 45 seconds. Reseat DIMM(s). Reconnect it to power.
4. Make sure that DSA and BIOS/uEFI are at the latest level.

Related Links:
- IBM Support Website
- Latest level of DSA
- Latest level of BMC/IMM

201-863-003 Standalone Memory Test Aborted

Explanation: No IBMERROR key in OEM1 structure.

Severity: Warning

Serviceable: No

Recoverable: No

Automatically notify Support: No

User response: Complete the following steps:

1. Perform the actions mentioned one at a time and try the test after each action.
2. If the problem remains, contact your technical-service representative.
3. Turn off the system and disconnect it from power. Wait for 45 seconds. Reseat DIMM(s). Reconnect it to power.
4. Make sure that DSA and BIOS/uEFI are at the latest level.

Related Links:

- IBM Support Website
- Latest level of DSA
- Latest level of BMC/IMM

201-864-000 Standalone Memory Test Aborted

Explanation: No GAS located in OEM1.

Severity: Warning

Serviceable: No

Recoverable: No

Automatically notify Support: No

User response: Complete the following steps:

1. Perform the actions mentioned one at a time and try the test after each action.
2. If the problem remains, contact your technical-service representative.
3. Turn off the system and disconnect it from power. Wait for 45 seconds. Reseat DIMM(s). Reconnect it to power.
4. Make sure that DSA and BIOS/uEFI are at the latest level.

Related Links:

- IBM Support Website
- Latest level of DSA
- Latest level of BMC/IMM

201-864-001 Standalone Memory Test Aborted

Explanation: No GAS located in OEM1.

Severity: Warning

Serviceable: No

Recoverable: No

Automatically notify Support: No

User response: Complete the following steps:

1. Perform the actions mentioned one at a time and try the test after each action.
2. If the problem remains, contact your technical-service representative.
3. Turn off the system and disconnect it from power. Wait for 45 seconds. Reseat DIMM(s). Reconnect it to power.
4. Make sure that DSA and BIOS/uEFI are at the latest level.

Related Links:

- IBM Support Website
- Latest level of DSA
- Latest level of BMC/IMM

201-864-002 Standalone Memory Test Aborted

Explanation: No GAS located in OEM1.

Severity: Warning

Serviceable: No

Recoverable: No

Automatically notify Support: No

User response: Complete the following steps:

1. Perform the actions mentioned one at a time and try the test after each action.
2. If the problem remains, contact your technical-service representative.
3. Turn off the system and disconnect it from power. Wait for 45 seconds. Reseat DIMM(s). Reconnect it to power.
4. Make sure that DSA and BIOS/uEFI are at the latest level.

Related Links:

- IBM Support Website
- Latest level of DSA
- Latest level of BMC/IMM

201-864-003 Standalone Memory Test Aborted

Explanation: No GAS located in OEM1.

Severity: Warning

Serviceable: No

Recoverable: No

Automatically notify Support: No

User response: Complete the following steps:

1. Perform the actions mentioned one at a time and try the test after each action.
2. If the problem remains, contact your technical-service representative.
3. Turn off the system and disconnect it from power. Wait for 45 seconds. Reseat DIMM(s). Reconnect it to power.
4. Make sure that DSA and BIOS/uEFI are at the latest level.

Related Links:

- IBM Support Website
- Latest level of DSA
- Latest level of BMC/IMM

201-865-000 Standalone Memory Test Aborted

Explanation: No XSECSRAT key in OEM0 structure.

Severity: Warning

Serviceable: No

Recoverable: No

Automatically notify Support: No

User response: Complete the following steps:

1. Perform the actions mentioned one at a time and try the test after each action.
2. If the problem remains, contact your technical-service representative.
3. Turn off the system and disconnect it from power. Wait for 45 seconds. Reseat DIMM(s). Reconnect it to power.
4. Make sure that DSA and BIOS/uEFI are at the latest level.

Related Links:
- IBM Support Website
- Latest level of DSA
- Latest level of BMC/IMM

201-865-001 Standalone Memory Test Aborted

Explanation: No XSECSRAT key in OEM0 structure.

Severity: Warning

Serviceable: No

Recoverable: No

Automatically notify Support: No

User response: Complete the following steps:
1. Perform the actions mentioned one at a time and try the test after each action.
2. If the problem remains, contact your technical-service representative.
3. Turn off the system and disconnect it from power. Wait for 45 seconds. Reseat DIMM(s). Reconnect it to power.
4. Make sure that DSA and BIOS/uEFI are at the latest level.

Related Links:
- IBM Support Website
- Latest level of DSA
- Latest level of BMC/IMM

201-865-002 Standalone Memory Test Aborted

Explanation: No XSECSRAT key in OEM0 structure.

Severity: Warning

Serviceable: No

Recoverable: No

Automatically notify Support: No

User response: Complete the following steps:
1. Perform the actions mentioned one at a time and try the test after each action.
2. If the problem remains, contact your technical-service representative.
3. Turn off the system and disconnect it from power. Wait for 45 seconds. Reseat DIMM(s). Reconnect it to power.
4. Make sure that DSA and BIOS/uEFI are at the latest level.

Related Links:
- IBM Support Website
- Latest level of DSA
- Latest level of BMC/IMM

201-865-003 Standalone Memory Test Aborted

Explanation: No XSECSRAT key in OEM0 structure.

Severity: Warning

Serviceable: No

Recoverable: No

Automatically notify Support: No

User response: Complete the following steps:

1. Perform the actions mentioned one at a time and try the test after each action.
2. If the problem remains, contact your technical-service representative.
3. Turn off the system and disconnect it from power. Wait for 45 seconds. Reseat DIMM(s). Reconnect it to power.
4. Make sure that DSA and BIOS/uEFI are at the latest level.

Related Links:
- IBM Support Website
- Latest level of DSA
- Latest level of BMC/IMM

201-866-000 Standalone Memory Test Aborted

Explanation: EFI-SAL Invalid parameter from GetMemoryMap function.

Severity: Warning

Serviceable: No

Recoverable: No

Automatically notify Support: No

User response: Complete the following steps:
1. Perform the actions mentioned one at a time and try the test after each action.
2. If the problem remains, contact your technical-service representative.
3. Turn off the system and disconnect it from power. Wait for 45 seconds. Reseat DIMM(s). Reconnect it to power.
4. Make sure that DSA and BIOS/uEFI are at the latest level.

Related Links:
- IBM Support Website
- Latest level of DSA
- Latest level of BMC/IMM

201-866-001 Standalone Memory Test Aborted

Explanation: EFI-SAL Invalid parameter from GetMemoryMap function.

Severity: Warning

Serviceable: No

Recoverable: No

Automatically notify Support: No

User response: Complete the following steps:
1. Perform the actions mentioned one at a time and try the test after each action.
2. If the problem remains, contact your technical-service representative.
3. Turn off the system and disconnect it from power. Wait for 45 seconds. Reseat DIMM(s). Reconnect it to power.
4. Make sure that DSA and BIOS/uEFI are at the latest level.

Related Links:
- IBM Support Website
- Latest level of DSA
- Latest level of BMC/IMM

201-866-002 Standalone Memory Test Aborted

Explanation: EFI-SAL Invalid parameter from GetMemoryMap function.

Severity: Warning

Serviceable: No

Recoverable: No

Automatically notify Support: No

User response: Complete the following steps:

1. Perform the actions mentioned one at a time and try the test after each action.
2. If the problem remains, contact your technical-service representative.
3. Turn off the system and disconnect it from power. Wait for 45 seconds. Reseat DIMM(s). Reconnect it to power.
4. Make sure that DSA and BIOS/uEFI are at the latest level.

Related Links:

- IBM Support Website
- Latest level of DSA
- Latest level of BMC/IMM

201-866-003 Standalone Memory Test Aborted

Explanation: EFI-SAL Invalid parameter from GetMemoryMap function.

Severity: Warning

Serviceable: No

Recoverable: No

Automatically notify Support: No

User response: Complete the following steps:

1. Perform the actions mentioned one at a time and try the test after each action.
2. If the problem remains, contact your technical-service representative.
3. Turn off the system and disconnect it from power. Wait for 45 seconds. Reseat DIMM(s). Reconnect it to power.
4. Make sure that DSA and BIOS/uEFI are at the latest level.

Related Links:

- IBM Support Website
- Latest level of DSA
- Latest level of BMC/IMM

201-867-000 Standalone Memory Test Aborted

Explanation: EFI/SAL: Buffer not allocated.

Severity: Warning

Serviceable: No

Recoverable: No

Automatically notify Support: No

User response: Complete the following steps:

1. Perform the actions mentioned one at a time and try the test after each action.
2. If the problem remains, contact your technical-service representative.
3. Turn off the system and disconnect it from power. Wait for 45 seconds. Reseat DIMM(s). Reconnect it to power.
4. Make sure that DSA and BIOS/uEFI are at the latest level.

Related Links:
- IBM Support Website
- Latest level of DSA
- Latest level of BMC/IMM

201-867-001 Standalone Memory Test Aborted

Explanation: EFI/SAL: Buffer not allocated.

Severity: Warning

Serviceable: No

Recoverable: No

Automatically notify Support: No

User response: Complete the following steps:
1. Perform the actions mentioned one at a time and try the test after each action.
2. If the problem remains, contact your technical-service representative.
3. Turn off the system and disconnect it from power. Wait for 45 seconds. Reseat DIMM(s). Reconnect it to power.
4. Make sure that DSA and BIOS/uEFI are at the latest level.

Related Links:
- IBM Support Website
- Latest level of DSA
- Latest level of BMC/IMM

201-867-002 Standalone Memory Test Aborted

Explanation: EFI/SAL: Buffer not allocated.

Severity: Warning

Serviceable: No

Recoverable: No

Automatically notify Support: No

User response: Complete the following steps:
1. Perform the actions mentioned one at a time and try the test after each action.
2. If the problem remains, contact your technical-service representative.
3. Turn off the system and disconnect it from power. Wait for 45 seconds. Reseat DIMM(s). Reconnect it to power.
4. Make sure that DSA and BIOS/uEFI are at the latest level.

Related Links:
- IBM Support Website
- Latest level of DSA
- Latest level of BMC/IMM

201-867-003 Standalone Memory Test Aborted

Explanation: EFI/SAL: Buffer not allocated.

Severity: Warning

Serviceable: No

Recoverable: No

Automatically notify Support: No

User response: Complete the following steps:

1. Perform the actions mentioned one at a time and try the test after each action.
2. If the problem remains, contact your technical-service representative.
3. Turn off the system and disconnect it from power. Wait for 45 seconds. Reseat DIMM(s). Reconnect it to power.
4. Make sure that DSA and BIOS/uEFI are at the latest level.

Related Links:

- IBM Support Website
- Latest level of DSA
- Latest level of BMC/IMM

201-868-000 Standalone Memory Test Aborted

Explanation: EFI/SAL: Buffer allocated in GetMemoryMap too small.

Severity: Warning

Serviceable: No

Recoverable: No

Automatically notify Support: No

User response: Complete the following steps:

1. Perform the actions mentioned one at a time and try the test after each action.
2. If the problem remains, contact your technical-service representative.
3. Turn off the system and disconnect it from power. Wait for 45 seconds. Reseat DIMM(s). Reconnect it to power.
4. Make sure that DSA and BIOS/uEFI are at the latest level.

Related Links:

- IBM Support Website
- Latest level of DSA
- Latest level of BMC/IMM

201-868-001 Standalone Memory Test Aborted

Explanation: EFI/SAL: Buffer allocated in GetMemoryMap too small.

Severity: Warning

Serviceable: No

Recoverable: No

Automatically notify Support: No

User response: Complete the following steps:

1. Perform the actions mentioned one at a time and try the test after each action.
2. If the problem remains, contact your technical-service representative.
3. Turn off the system and disconnect it from power. Wait for 45 seconds. Reseat DIMM(s). Reconnect it to power.
4. Make sure that DSA and BIOS/uEFI are at the latest level.

Related Links:

- IBM Support Website
- Latest level of DSA
- Latest level of BMC/IMM

201-868-002 Standalone Memory Test Aborted

Explanation: EFI/SAL: Buffer allocated in GetMemoryMap too small.

Severity: Warning

Serviceable: No

Recoverable: No

Automatically notify Support: No

User response: Complete the following steps:

1. Perform the actions mentioned one at a time and try the test after each action.
2. If the problem remains, contact your technical-service representative.
3. Turn off the system and disconnect it from power. Wait for 45 seconds. Reseat DIMM(s). Reconnect it to power.
4. Make sure that DSA and BIOS/uEFI are at the latest level.

Related Links:

- IBM Support Website
- Latest level of DSA
- Latest level of BMC/IMM

201-868-003 Standalone Memory Test Aborted

Explanation: EFI/SAL: Buffer allocated in GetMemoryMap too small.

Severity: Warning

Serviceable: No

Recoverable: No

Automatically notify Support: No

User response: Complete the following steps:

1. Perform the actions mentioned one at a time and try the test after each action.
2. If the problem remains, contact your technical-service representative.
3. Turn off the system and disconnect it from power. Wait for 45 seconds. Reseat DIMM(s). Reconnect it to power.
4. Make sure that DSA and BIOS/uEFI are at the latest level.

Related Links:

- IBM Support Website
- Latest level of DSA
- Latest level of BMC/IMM

201-869-000 Standalone Memory Test Aborted

Explanation: EFI/SAL Invalid parameter from GetMemoryMap function.

Severity: Warning

Serviceable: No

Recoverable: No

Automatically notify Support: No

User response: Complete the following steps:

1. Perform the actions mentioned one at a time and try the test after each action.
2. If the problem remains, contact your technical-service representative.
3. Turn off the system and disconnect it from power. Wait for 45 seconds. Reseat DIMM(s). Reconnect it to power.
4. Make sure that DSA and BIOS/uEFI are at the latest level.

Related Links:
- IBM Support Website
- Latest level of DSA
- Latest level of BMC/IMM

201-869-001 Standalone Memory Test Aborted

Explanation: EFI/SAL Invalid parameter from GetMemoryMap function.

Severity: Warning

Serviceable: No

Recoverable: No

Automatically notify Support: No

User response: Complete the following steps:
1. Perform the actions mentioned one at a time and try the test after each action.
2. If the problem remains, contact your technical-service representative.
3. Turn off the system and disconnect it from power. Wait for 45 seconds. Reseat DIMM(s). Reconnect it to power.
4. Make sure that DSA and BIOS/uEFI are at the latest level.

Related Links:
- IBM Support Website
- Latest level of DSA
- Latest level of BMC/IMM

201-869-002 Standalone Memory Test Aborted

Explanation: EFI/SAL Invalid parameter from GetMemoryMap function.

Severity: Warning

Serviceable: No

Recoverable: No

Automatically notify Support: No

User response: Complete the following steps:
1. Perform the actions mentioned one at a time and try the test after each action.
2. If the problem remains, contact your technical-service representative.
3. Turn off the system and disconnect it from power. Wait for 45 seconds. Reseat DIMM(s). Reconnect it to power.
4. Make sure that DSA and BIOS/uEFI are at the latest level.

Related Links:
- IBM Support Website
- Latest level of DSA
- Latest level of BMC/IMM

201-869-003 Standalone Memory Test Aborted

Explanation: EFI/SAL Invalid parameter from GetMemoryMap function.

Severity: Warning

Serviceable: No

Recoverable: No

Automatically notify Support: No

User response: Complete the following steps:

1. Perform the actions mentioned one at a time and try the test after each action.
2. If the problem remains, contact your technical-service representative.
3. Turn off the system and disconnect it from power. Wait for 45 seconds. Reseat DIMM(s). Reconnect it to power.
4. Make sure that DSA and BIOS/uEFI are at the latest level.

Related Links:
- IBM Support Website
- Latest level of DSA
- Latest level of BMC/IMM

201-870-000 Standalone Memory Test Aborted

Explanation: CPU Doamin in ACPI not valid.

Severity: Warning

Serviceable: No

Recoverable: No

Automatically notify Support: No

User response: Complete the following steps:
1. Perform the actions mentioned one at a time and try the test after each action.
2. If the problem remains, contact your technical-service representative.
3. Turn off the system and disconnect it from power. Wait for 45 seconds. Reseat DIMM(s). Reconnect it to power.
4. Make sure that DSA and BIOS/uEFI are at the latest level.

Related Links:
- IBM Support Website
- Latest level of DSA
- Latest level of BMC/IMM

201-870-001 Standalone Memory Test Aborted

Explanation: CPU Doamin in ACPI not valid.

Severity: Warning

Serviceable: No

Recoverable: No

Automatically notify Support: No

User response: Complete the following steps:
1. Perform the actions mentioned one at a time and try the test after each action.
2. If the problem remains, contact your technical-service representative.
3. Turn off the system and disconnect it from power. Wait for 45 seconds. Reseat DIMM(s). Reconnect it to power.
4. Make sure that DSA and BIOS/uEFI are at the latest level.

Related Links:
- IBM Support Website
- Latest level of DSA
- Latest level of BMC/IMM

201-870-002 Standalone Memory Test Aborted

Explanation: CPU Doamin in ACPI not valid.

Severity: Warning

Serviceable: No

Recoverable: No

Automatically notify Support: No

User response: Complete the following steps:

1. Perform the actions mentioned one at a time and try the test after each action.
2. If the problem remains, contact your technical-service representative.
3. Turn off the system and disconnect it from power. Wait for 45 seconds. Reseat DIMM(s). Reconnect it to power.
4. Make sure that DSA and BIOS/uEFI are at the latest level.

Related Links:

- IBM Support Website
- Latest level of DSA
- Latest level of BMC/IMM

201-870-003 Standalone Memory Test Aborted

Explanation: CPU Doamin in ACPI not valid.

Severity: Warning

Serviceable: No

Recoverable: No

Automatically notify Support: No

User response: Complete the following steps:

1. Perform the actions mentioned one at a time and try the test after each action.
2. If the problem remains, contact your technical-service representative.
3. Turn off the system and disconnect it from power. Wait for 45 seconds. Reseat DIMM(s). Reconnect it to power.
4. Make sure that DSA and BIOS/uEFI are at the latest level.

Related Links:

- IBM Support Website
- Latest level of DSA
- Latest level of BMC/IMM

201-871-000 Standalone Memory Test Aborted

Explanation: Data Mis-compare encountered.

Severity: Warning

Serviceable: No

Recoverable: No

Automatically notify Support: No

User response: Complete the following steps:

1. Perform the actions mentioned one at a time and try the test after each action.
2. If the problem remains, contact your technical-service representative.
3. Turn off the system and disconnect it from power. Wait for 45 seconds. Reseat DIMM(s). Reconnect it to power.
4. Make sure that DSA and BIOS/uEFI are at the latest level.

Related Links:

- IBM Support Website
- Latest level of DSA
- Latest level of BMC/IMM

201-871-001 Standalone Memory Test Aborted

Explanation: Data Mis-compare encountered.

Severity: Warning

Serviceable: No

Recoverable: No

Automatically notify Support: No

User response: Complete the following steps:

1. Perform the actions mentioned one at a time and try the test after each action.
2. If the problem remains, contact your technical-service representative.
3. Turn off the system and disconnect it from power. Wait for 45 seconds. Reseat DIMM(s). Reconnect it to power.
4. Make sure that DSA and BIOS/uEFI are at the latest level.

Related Links:

- IBM Support Website
- Latest level of DSA
- Latest level of BMC/IMM

201-871-002 Standalone Memory Test Aborted

Explanation: Data Mis-compare encountered.

Severity: Warning

Serviceable: No

Recoverable: No

Automatically notify Support: No

User response: Complete the following steps:

1. Perform the actions mentioned one at a time and try the test after each action.
2. If the problem remains, contact your technical-service representative.
3. Turn off the system and disconnect it from power. Wait for 45 seconds. Reseat DIMM(s). Reconnect it to power.
4. Make sure that DSA and BIOS/uEFI are at the latest level.

Related Links:

- IBM Support Website
- Latest level of DSA
- Latest level of BMC/IMM

201-871-003 Standalone Memory Test Aborted

Explanation: Data Mis-compare encountered.

Severity: Warning

Serviceable: No

Recoverable: No

Automatically notify Support: No

User response: Complete the following steps:

1. Perform the actions mentioned one at a time and try the test after each action.
2. If the problem remains, contact your technical-service representative.
3. Turn off the system and disconnect it from power. Wait for 45 seconds. Reseat DIMM(s). Reconnect it to power.
4. Make sure that DSA and BIOS/uEFI are at the latest level.

Related Links:

- IBM Support Website
- Latest level of DSA
- Latest level of BMC/IMM

201-877-000 Standalone Memory Test Aborted

Explanation: BIOS: Sparing in Extended PCI reg. must be OFF. Go to setup and disable sparing.

Severity: Warning

Serviceable: No

Recoverable: No

Automatically notify Support: No

User response: Complete the following steps:

1. Perform the actions mentioned one at a time and try the test after each action.
2. If the problem remains, contact your technical-service representative.
3. Turn off the system and disconnect it from power. Wait for 45 seconds. Reseat DIMM(s). Reconnect it to power.
4. Make sure that DSA and BIOS/uEFI are at the latest level.

Related Links:

- IBM Support Website
- Latest level of DSA
- Latest level of BMC/IMM

201-877-001 Standalone Memory Test Aborted

Explanation: BIOS: Sparing in Extended PCI reg. must be OFF. Go to setup and disable sparing.

Severity: Warning

Serviceable: No

Recoverable: No

Automatically notify Support: No

User response: Complete the following steps:

1. Perform the actions mentioned one at a time and try the test after each action.
2. If the problem remains, contact your technical-service representative.
3. Turn off the system and disconnect it from power. Wait for 45 seconds. Reseat DIMM(s). Reconnect it to power.
4. Make sure that DSA and BIOS/uEFI are at the latest level.

Related Links:

- IBM Support Website
- Latest level of DSA
- Latest level of BMC/IMM

201-877-002 Standalone Memory Test Aborted

Explanation: BIOS: Sparing in Extended PCI reg. must be OFF. Go to setup and disable sparing.

Severity: Warning

Serviceable: No

Recoverable: No

Automatically notify Support: No

User response: Complete the following steps:

1. Perform the actions mentioned one at a time and try the test after each action.
2. If the problem remains, contact your technical-service representative.
3. Turn off the system and disconnect it from power. Wait for 45 seconds. Reseat DIMM(s). Reconnect it to power.
4. Make sure that DSA and BIOS/uEFI are at the latest level.

Related Links:

- IBM Support Website
- Latest level of DSA
- Latest level of BMC/IMM

201-877-003 Standalone Memory Test Aborted

Explanation: BIOS: Sparing in Extended PCI reg. must be OFF. Go to setup and disable sparing.

Severity: Warning

Serviceable: No

Recoverable: No

Automatically notify Support: No

User response: Complete the following steps:

1. Perform the actions mentioned one at a time and try the test after each action.
2. If the problem remains, contact your technical-service representative.
3. Turn off the system and disconnect it from power. Wait for 45 seconds. Reseat DIMM(s). Reconnect it to power.
4. Make sure that DSA and BIOS/uEFI are at the latest level.

Related Links:

- IBM Support Website
- Latest level of DSA
- Latest level of BMC/IMM

201-878-000 Standalone Memory Test Aborted

Explanation: Sparing feature must be turned OFF. Go to setup and turn the sparing feature OFF.

Severity: Warning

Serviceable: No

Recoverable: No

Automatically notify Support: No

User response: Complete the following steps:

1. Perform the actions mentioned one at a time and try the test after each action.
2. If the problem remains, contact your technical-service representative.
3. Turn off the system and disconnect it from power. Wait for 45 seconds. Reseat DIMM(s). Reconnect it to power.
4. Make sure that DSA and BIOS/uEFI are at the latest level.

Related Links:
- IBM Support Website
- Latest level of DSA
- Latest level of BMC/IMM

201-878-001 Standalone Memory Test Aborted

Explanation: Sparing feature must be turned OFF. Go to setup and turn the sparing feature OFF.

Severity: Warning

Serviceable: No

Recoverable: No

Automatically notify Support: No

User response: Complete the following steps:
1. Perform the actions mentioned one at a time and try the test after each action.
2. If the problem remains, contact your technical-service representative.
3. Turn off the system and disconnect it from power. Wait for 45 seconds. Reseat DIMM(s). Reconnect it to power.
4. Make sure that DSA and BIOS/uEFI are at the latest level.

Related Links:
- IBM Support Website
- Latest level of DSA
- Latest level of BMC/IMM

201-878-002 Standalone Memory Test Aborted

Explanation: Sparing feature must be turned OFF. Go to setup and turn the sparing feature OFF.

Severity: Warning

Serviceable: No

Recoverable: No

Automatically notify Support: No

User response: Complete the following steps:
1. Perform the actions mentioned one at a time and try the test after each action.
2. If the problem remains, contact your technical-service representative.
3. Turn off the system and disconnect it from power. Wait for 45 seconds. Reseat DIMM(s). Reconnect it to power.
4. Make sure that DSA and BIOS/uEFI are at the latest level.

Related Links:
- IBM Support Website
- Latest level of DSA
- Latest level of BMC/IMM

201-878-003 Standalone Memory Test Aborted

Explanation: Sparing feature must be turned OFF. Go to setup and turn the sparing feature OFF.

Severity: Warning

Serviceable: No

Recoverable: No

Automatically notify Support: No

User response: Complete the following steps:

1. Perform the actions mentioned one at a time and try the test after each action.
2. If the problem remains, contact your technical-service representative.
3. Turn off the system and disconnect it from power. Wait for 45 seconds. Reseat DIMM(s). Reconnect it to power.
4. Make sure that DSA and BIOS/uEFI are at the latest level.

Related Links:

- IBM Support Website
- Latest level of DSA
- Latest level of BMC/IMM

201-885-000 Standalone Memory Test Aborted

Explanation: Processor does not support MTRR register manipulation. Can not write to memory without cache.

Severity: Warning

Serviceable: No

Recoverable: No

Automatically notify Support: No

User response: Complete the following steps:

1. Perform the actions mentioned one at a time and try the test after each action.
2. If the problem remains, contact your technical-service representative.
3. Turn off the system and disconnect it from power. Wait for 45 seconds. Reseat DIMM(s). Reconnect it to power.
4. Make sure that DSA and BIOS/uEFI are at the latest level.

Related Links:

- IBM Support Website
- Latest level of DSA
- Latest level of BMC/IMM

201-885-001 Standalone Memory Test Aborted

Explanation: Processor does not support MTRR register manipulation. Can not write to memory without cache.

Severity: Warning

Serviceable: No

Recoverable: No

Automatically notify Support: No

User response: Complete the following steps:

1. Perform the actions mentioned one at a time and try the test after each action.
2. If the problem remains, contact your technical-service representative.
3. Turn off the system and disconnect it from power. Wait for 45 seconds. Reseat DIMM(s). Reconnect it to power.
4. Make sure that DSA and BIOS/uEFI are at the latest level.

Related Links:

- IBM Support Website
- Latest level of DSA
- Latest level of BMC/IMM

201-885-002 Standalone Memory Test Aborted

Explanation: Processor does not support MTRR register manipulation. Can not write to memory without cache.

Severity: Warning

Serviceable: No

Recoverable: No

Automatically notify Support: No

User response: Complete the following steps:

1. Perform the actions mentioned one at a time and try the test after each action.
2. If the problem remains, contact your technical-service representative.
3. Turn off the system and disconnect it from power. Wait for 45 seconds. Reseat DIMM(s). Reconnect it to power.
4. Make sure that DSA and BIOS/uEFI are at the latest level.

Related Links:

- IBM Support Website
- Latest level of DSA
- Latest level of BMC/IMM

201-885-003 Standalone Memory Test Aborted

Explanation: Processor does not support MTRR register manipulation. Can not write to memory without cache.

Severity: Warning

Serviceable: No

Recoverable: No

Automatically notify Support: No

User response: Complete the following steps:

1. Perform the actions mentioned one at a time and try the test after each action.
2. If the problem remains, contact your technical-service representative.
3. Turn off the system and disconnect it from power. Wait for 45 seconds. Reseat DIMM(s). Reconnect it to power.
4. Make sure that DSA and BIOS/uEFI are at the latest level.

Related Links:

- IBM Support Website
- Latest level of DSA
- Latest level of BMC/IMM

201-886-000 Standalone Memory Test Aborted

Explanation: Memory Upper limit is less than 16 Mbytes.

Severity: Warning

Serviceable: No

Recoverable: No

Automatically notify Support: No

User response: Complete the following steps:

1. Perform the actions mentioned one at a time and try the test after each action.
2. If the problem remains, contact your technical-service representative.
3. Turn off the system and disconnect it from power. Wait for 45 seconds. Reseat DIMM(s). Reconnect it to power.
4. Make sure that DSA and BIOS/uEFI are at the latest level.

Related Links:
- IBM Support Website
- Latest level of DSA
- Latest level of BMC/IMM

201-886-001 Standalone Memory Test Aborted

Explanation: Memory Upper limit is less than 16 Mbytes.

Severity: Warning

Serviceable: No

Recoverable: No

Automatically notify Support: No

User response: Complete the following steps:
1. Perform the actions mentioned one at a time and try the test after each action.
2. If the problem remains, contact your technical-service representative.
3. Turn off the system and disconnect it from power. Wait for 45 seconds. Reseat DIMM(s). Reconnect it to power.
4. Make sure that DSA and BIOS/uEFI are at the latest level.

Related Links:
- IBM Support Website
- Latest level of DSA
- Latest level of BMC/IMM

201-886-002 Standalone Memory Test Aborted

Explanation: Memory Upper limit is less than 16 Mbytes.

Severity: Warning

Serviceable: No

Recoverable: No

Automatically notify Support: No

User response: Complete the following steps:
1. Perform the actions mentioned one at a time and try the test after each action.
2. If the problem remains, contact your technical-service representative.
3. Turn off the system and disconnect it from power. Wait for 45 seconds. Reseat DIMM(s). Reconnect it to power.
4. Make sure that DSA and BIOS/uEFI are at the latest level.

Related Links:
- IBM Support Website
- Latest level of DSA
- Latest level of BMC/IMM

201-886-003 Standalone Memory Test Aborted

Explanation: Memory Upper limit is less than 16 Mbytes.

Severity: Warning

Serviceable: No

Recoverable: No

Automatically notify Support: No

User response: Complete the following steps:

1. Perform the actions mentioned one at a time and try the test after each action.
2. If the problem remains, contact your technical-service representative.
3. Turn off the system and disconnect it from power. Wait for 45 seconds. Reseat DIMM(s). Reconnect it to power.
4. Make sure that DSA and BIOS/uEFI are at the latest level.

Related Links:
- IBM Support Website
- Latest level of DSA
- Latest level of BMC/IMM

201-899-000 Standalone Memory Test Aborted

Explanation: Memory Diagnostics Test Aborted by user.

Severity: Warning

Serviceable: No

Recoverable: No

Automatically notify Support: No

Related Links:
- IBM Support Website
- Latest level of DSA
- Latest level of BMC/IMM

201-899-001 Standalone Memory Test Aborted

Explanation: Memory Diagnostics Test Aborted by user.

Severity: Warning

Serviceable: No

Recoverable: No

Automatically notify Support: No

Related Links:
- IBM Support Website
- Latest level of DSA
- Latest level of BMC/IMM

201-899-002 Standalone Memory Test Aborted

Explanation: Memory Diagnostics Test Aborted by user.

Severity: Warning

Serviceable: No

Recoverable: No

Automatically notify Support: No

Related Links:
- IBM Support Website
- Latest level of DSA
- Latest level of BMC/IMM

201-899-003 Standalone Memory Test Aborted

Explanation: Memory Diagnostics Test Aborted by user.

Severity: Warning

Serviceable: No

Recoverable: No

Automatically notify Support: No

Related Links:

- IBM Support Website
- Latest level of DSA
- Latest level of BMC/IMM

201-901-000 Standalone Memory Test Failed

Explanation: Memory Diagnostics Test Failed.

Severity: Error

Serviceable: Yes

Recoverable: No

Automatically notify Support: No

User response: Complete the following steps:

1. Perform the actions mentioned one at a time and try the test after each action.
2. If the problem remains, contact your technical-service representative.
3. Turn off the system and disconnect it from power. Wait for 45 seconds. Reseat DIMM(s). Reconnect it to power.
4. Make sure that DSA and BIOS/uEFI are at the latest level.
5. Replace any DIMMS(s) mentioned in error, one by one.
6. Make sure that all DIMMs are enabled in the Configuration/Setup Utility program.
7. If failure remains, refer to "Troubleshooting by symptom" in the system "Installation and Service Guide" for the next corrective action.

Related Links:

- IBM Support Website
- Latest level of DSA
- Latest level of BMC/IMM

201-901-001 Standalone Memory Test Failed

Explanation: Memory Diagnostics Test Failed.

Severity: Error

Serviceable: Yes

Recoverable: No

Automatically notify Support: No

User response: Complete the following steps:

1. Perform the actions mentioned one at a time and try the test after each action.
2. If the problem remains, contact your technical-service representative.
3. Turn off the system and disconnect it from power. Wait for 45 seconds. Reseat DIMM(s). Reconnect it to power.
4. Make sure that DSA and BIOS/uEFI are at the latest level.
5. Replace any DIMMS(s) mentioned in error, one by one.
6. Make sure that all DIMMs are enabled in the Configuration/Setup Utility program.

7. If failure remains, refer to "Troubleshooting by symptom" in the system "Installation and Service Guide" for the next corrective action.

Related Links:

- IBM Support Website
- Latest level of DSA
- Latest level of BMC/IMM

201-901-002 Standalone Memory Test Failed

Explanation: Memory Diagnostics Test Failed.

Severity: Error

Serviceable: Yes

Recoverable: No

Automatically notify Support: No

User response: Complete the following steps:

1. Perform the actions mentioned one at a time and try the test after each action.
2. If the problem remains, contact your technical-service representative.
3. Turn off the system and disconnect it from power. Wait for 45 seconds. Reseat DIMM(s). Reconnect it to power.
4. Make sure that DSA and BIOS/uEFI are at the latest level.
5. Replace any DIMMS(s) mentioned in error, one by one.
6. Make sure that all DIMMs are enabled in the Configuration/Setup Utility program.
7. If failure remains, refer to "Troubleshooting by symptom" in the system "Installation and Service Guide" for the next corrective action.

Related Links:

- IBM Support Website
- Latest level of DSA
- Latest level of BMC/IMM

201-901-003 Standalone Memory Test Failed

Explanation: Memory Diagnostics Test Failed.

Severity: Error

Serviceable: Yes

Recoverable: No

Automatically notify Support: No

User response: Complete the following steps:

1. Perform the actions mentioned one at a time and try the test after each action.
2. If the problem remains, contact your technical-service representative.
3. Turn off the system and disconnect it from power. Wait for 45 seconds. Reseat DIMM(s). Reconnect it to power.
4. Make sure that DSA and BIOS/uEFI are at the latest level.
5. Replace any DIMMS(s) mentioned in error, one by one.
6. Make sure that all DIMMs are enabled in the Configuration/Setup Utility program.
7. If failure remains, refer to "Troubleshooting by symptom" in the system "Installation and Service Guide" for the next corrective action.

Related Links:

- IBM Support Website
- Latest level of DSA
- Latest level of BMC/IMM

DSA optical drive test results

The following messages can result when you run the optical drive test.

215-000-000 Optical Drive Test Passed

Explanation: Optical Drive Test Passed.

Severity: Event

Serviceable: No

Recoverable: No

Automatically notify Support: No

Related Links:

- IBM Support Website
- Latest level of DSA
- Latest level of BMC/IMM

215-801-000 Optical Drive Test Aborted

Explanation: Optical Drive Test Aborted. Unable to communicate with driver.

Severity: Warning

Serviceable: Yes

Recoverable: No

Automatically notify Support: No

User response: Complete the following steps:

1. Make sure that the DSA Diagnostic code is at the latest level.
2. Run the test again.
3. Check the drive cabling for loose or broken connections at both ends or damage to the cable. Replace the cable if damage is present.
4. Run the test again.
5. Check system firmware level and upgrade if necessary.The installed firmware level can be found in the DSA Diagnostic Event Log within the Firmware/VPD section for this component.
6. Run the test again.

Related Links:

- IBM Support Website
- Latest level of DSA
- Latest level of BMC/IMM

215-802-000 Optical Drive Test Aborted

Explanation: Optical Drive Test Aborted. A read error was encountered.

Severity: Warning

Serviceable: Yes

Recoverable: No

Automatically notify Support: No

User response: Complete the following steps:

1. Insert a new CD or DVD into the drive and wait for 15 seconds for the media to be recognized. Rerun the test.
2. Check the drive cabling for loose or broken connections at both ends or damage to the cable. Replace the cable if damage is present.
3. Run the test again.

4. If failure remains, refer to "Troubleshooting by symptom" in the system "Installation and Service Guide" for the next corrective action.

Related Links:

- IBM Support Website
- Latest level of DSA
- Latest level of BMC/IMM

215-803-000 Optical Drive Test Failed

Explanation: Optical Drive Test Failed. Disk may be in use by the operating system.

Severity: Error

Serviceable: Yes

Recoverable: No

Automatically notify Support: No

User response: Complete the following steps:

1. Wait for the system activity to cease
2. Run the test again
3. Turn off and restart the system.
4. Run the test again.

Related Links:

- IBM Support Website
- Latest level of DSA
- Latest level of BMC/IMM

215-804-000 Optical Drive Test Aborted

Explanation: Optical Drive Test Aborted. The media tray is open.

Severity: Warning

Serviceable: Yes

Recoverable: No

Automatically notify Support: No

User response: Complete the following steps:

1. Close the media tray and wait for 15 seconds for the media to be recognized. Run the test again.
2. Insert a new CD or DVD into the drive and wait for 15 seconds for the media to be recognized. Rerun the test.
3. Check the drive cabling for loose or broken connections at both ends or damage to the cable. Replace the cable if damage is present.
4. Run the test again.
5. If failure remains, refer to "Troubleshooting by symptom" in the system "Installation and Service Guide" for the next corrective action.

Related Links:

- IBM Support Website
- Latest level of DSA
- Latest level of BMC/IMM

215-901-000 Optical Drive Test Aborted

Explanation: Optical Drive Test Aborted. Drive media is not detected.

Severity: Warning

Serviceable: Yes

Recoverable: No

Automatically notify Support: No

User response: Complete the following steps:

1. Insert a new CD or DVD into the drive and wait for 15 seconds for the media to be recognized. Rerun the test.
2. Check the drive cabling for loose or broken connections at both ends or damage to the cable. Replace the cable if damage is present.
3. Run the test again.
4. If failure remains, refer to "Troubleshooting by symptom" in the system "Installation and Service Guide" for the next corrective action.

Related Links:

- IBM Support Website
- Latest level of DSA
- Latest level of BMC/IMM

215-902-000 Optical Drive Test Failed

Explanation: Optical Drive Test Failed. Read miscompare.

Severity: Error

Serviceable: Yes

Recoverable: No

Automatically notify Support: No

User response: Complete the following steps:

1. Insert a new CD or DVD into the drive and wait for 15 seconds for the media to be recognized. Rerun the test.
2. Check the drive cabling for loose or broken connections at both ends or damage to the cable. Replace the cable if damage is present.
3. Run the test again.
4. If failure remains, refer to "Troubleshooting by symptom" in the system "Installation and Service Guide" for the next corrective action.

Related Links:

- IBM Support Website
- Latest level of DSA
- Latest level of BMC/IMM

215-903-000 Optical Drive Test Aborted

Explanation: Optical Drive Test Aborted. Could not access the device.

Severity: Warning

Serviceable: Yes

Recoverable: No

Automatically notify Support: No

User response: Complete the following steps:

1. Insert a new CD or DVD into the drive and wait for 15 seconds for the media to be recognized. Rerun the test.

2. Check the drive cabling for loose or broken connections at both ends or damage to the cable. Replace the cable if damage is present.
3. Run the test again.
4. Check system firmware level and upgrade if necessary.The installed firmware level can be found in the DSA Diagnostic Event Log within the Firmware/VPD section for this component.
5. Run the test again.
6. If failure remains, refer to "Troubleshooting by symptom" in the system "Installation and Service Guide" for the next corrective action.

Related Links:

- IBM Support Website
- Latest level of DSA
- Latest level of BMC/IMM

DSA tape drive test results

The following messages can result when you run the tape drive test.

264-000-000 Tape Test Passed

Explanation: Tape Test Passed.

Severity: Event

Serviceable: No

Recoverable: No

Automatically notify Support: No

Related Links:

- IBM Support Website
- Latest level of DSA
- Latest level of BMC/IMM

264-901-000 Tape Test Failed

Explanation: An error was found in the tape alert log.

Severity: Error

Serviceable: Yes

Recoverable: No

Automatically notify Support: No

User response: Complete the following steps:

1. Clean the tape drive using the appropriate cleaning media and install new media.
2. Run the test again.
3. Clear the error log.
4. Run the test again.
5. Make sure that the drive firmware is at the latest level.
6. Rerun the test after upgrading to the latest firmware level.
7. If the failure remains, refer to "Troubleshooting by symptom" in the system "Installation and Service Guide" for the next corrective action.

Related Links:

- IBM Support Website
- Latest level of DSA
- Latest level of BMC/IMM

264-902-000 Tape Test Failed

Explanation: Tape Test Failed. Media is not detected.

Severity: Error

Serviceable: Yes

Recoverable: No

Automatically notify Support: No

User response: Complete the following steps:

1. Clean the tape drive using the appropriate cleaning media and install new media.
2. Run the test again.
3. Make sure that the drive firmware is at the latest level.
4. Rerun the test after upgrading to the latest firmware level.
5. If the failure remains, refer to "Troubleshooting by symptom" in the system "Installation and Service Guide" for the next corrective action.

Related Links:

- IBM Support Website
- Latest level of DSA
- Latest level of BMC/IMM

264-903-000 Tape Test Failed

Explanation: Tape Test Failed. Media is not detected.

Severity: Error

Serviceable: Yes

Recoverable: No

Automatically notify Support: No

User response: Complete the following steps:

1. Clean the tape drive using the appropriate cleaning media and install new media.
2. Run the test again.
3. Make sure that the drive firmware is at the latest level.
4. Rerun the test after upgrading to the latest firmware level.
5. If the failure remains, refer to "Troubleshooting by symptom" in the system "Installation and Service Guide" for the next corrective action.

Related Links:

- IBM Support Website
- Latest level of DSA
- Latest level of BMC/IMM

264-904-000 Tape Test Failed

Explanation: Tape Test Failed. Drive hardware error.

Severity: Error

Serviceable: Yes

Recoverable: No

Automatically notify Support: No

User response: Complete the following steps:

1. Check the tape drive cabling for loose or broken connections or damage to the cable. Replace the cable if damage is present.
2. Clean the tape drive using the appropriate cleaning media and install new media.
3. Run the test again.
4. Make sure that the drive firmware is at the latest level.
5. Rerun the test after upgrading to the latest firmware level.
6. If the failure remains, refer to "Troubleshooting by symptom" in the system "Installation and Service Guide" for the next corrective action.

Related Links:

- IBM Support Website
- Latest level of DSA
- Latest level of BMC/IMM

264-905-000 Tape Test Failed

Explanation: Tape Test Failed. Software error: invalid request.

Severity: Error

Serviceable: Yes

Recoverable: No

Automatically notify Support: No

User response: Complete the following steps:

1. If the system has stopped responding, turn off and restart the system.
2. Check the system firmware level and upgrade if necessary. The installed firmware level can be found in the DSA Diagnostic Event Log within the Firmware/VPD section for this component.
3. Run the test again.
4. If the system has stopped responding, turn off and restart the system.
5. Make sure that the drive firmware is at the latest level.
6. Run the test again.
7. If the failure remains, refer to "Troubleshooting by symptom" in the system "Installation and Service Guide" for the next corrective action.

Related Links:

- IBM Support Website
- Latest level of DSA
- Latest level of BMC/IMM

264-906-000 Tape Test Failed

Explanation: Tape Test Failed. Unrecognized error.

Severity: Error

Serviceable: Yes

Recoverable: No

Automatically notify Support: No

User response: Complete the following steps:

1. Clean the tape drive using the appropriate cleaning media and install new media.
2. Run the test again.
3. Make sure that the drive firmware is at the latest level.
4. Rerun the test after upgrading to the latest firmware level.
5. Make sure that the DSA Diagnostic code is at the latest level.

6. Run the test again.
7. Check the system firmware level and upgrade if necessary.
8. Run the test again.
9. If the failure remains, refer to "Troubleshooting by symptom" in the system "Installation and Service Guide" for the next corrective action.

Related Links:

- IBM Support Website
- Latest level of DSA
- Latest level of BMC/IMM

264-907-000 Tape Test Failed

Explanation: An error was found in the block address somewhere.

Severity: Error

Serviceable: Yes

Recoverable: No

Automatically notify Support: No

User response: Complete the following steps:

1. Clean the tape drive using the appropriate cleaning media and install new media.

Related Links:

- IBM Support Website
- Latest level of DSA
- Latest level of BMC/IMM

264-908-000 Tape Test Failed

Explanation: An error was found in getting tape capacity.

Severity: Error

Serviceable: Yes

Recoverable: No

Automatically notify Support: No

User response: Complete the following steps:

1. Make sure that medium is present.
2. Clean the tape drive using the appropriate cleaning media and install new media.

Related Links:

- IBM Support Website
- Latest level of DSA
- Latest level of BMC/IMM

DSA hard drive test results

The following messages can result when you run the hard drive test.

217-000-000 HDD Test Passed

Explanation: HDD Stress Test Passed.

Severity: Event

Serviceable: No

Recoverable: No

Automatically notify Support: No

Related Links:

- IBM Support Website
- Latest level of DSA
- Latest level of BMC/IMM

217-800-000 HDD Test Aborted

Explanation: HDD Test Aborted. The test was canceled.

Severity: Warning

Serviceable: Yes

Recoverable: No

Automatically notify Support: No

User response: Complete the following steps:

1. Check cable connections.
2. Rerun the test.
3. Verify that Hard drive supports self test and self test logging.
4. If the problem remains, contact your technical-support representative.

Related Links:

- IBM Support Website
- Latest level of DSA
- Latest level of BMC/IMM

217-900-000 HDD Test Failed

Explanation: HDD Test Failed. The hard drive self-test detected a failure.

Severity: Error

Serviceable: Yes

Recoverable: No

Automatically notify Support: No

User response: Complete the following steps:

1. Check cable connections.
2. Rerun the test.
3. Verify the firmware is at the latest level.
4. Rerun the test.
5. If the problem remains, contact your technical-support representative.

Related Links:

- IBM Support Website
- Latest level of DSA
- Latest level of BMC/IMM

DSA LSI hard drive test results

The following messages can result when you run the LSI hard drive test.

407-000-000 LSIESG:DiskDefaultDiagnostic Test Passed

Explanation: The test passed.

Severity: Event

Serviceable: No

Recoverable: No

Automatically notify Support: No

Related Links:

- IBM Support Website
- Latest level of DSA
- Latest level of BMC/IMM

407-800-000 LSIESG:DiskDefaultDiagnostic Test Aborted

Explanation: The test was canceled.

Severity: Warning

Serviceable: No

Recoverable: No

Automatically notify Support: No

Related Links:

- IBM Support Website
- Latest level of DSA
- Latest level of BMC/IMM

407-900-000 LSIESG:DiskDefaultDiagnostic Test Failed

Explanation: The hard drive self-test detected a failure.

Severity: Error

Serviceable: Yes

Recoverable: No

Automatically notify Support: No

User response: Complete the following steps:

1. Check cable connections.
2. Rerun the test.
3. Verify whether the firmware is at the latest level.
4. Rerun the test.
5. If the problem remains, contact your IBM technical-support representative.

Related Links:

- IBM Support Website
- Latest level of DSA
- Latest level of BMC/IMM

DSA Nvidia GPU test results

The following messages can result when you run the Nvidia GPU test.

409-000-000 NVIDIA User Diagnostic Test Passed

Explanation: NVIDIA User Diagnostic test passed.

Severity: Event

Serviceable: No

Recoverable: No

Automatically notify Support: No

Related Links:

- IBM Support Website
- Latest level of DSA
- Latest level of BMC/IMM

409-003-000 Nvidia::DiagnosticServiceProvider::Bandwidth Test Passed

Explanation: Nvidia GPU Bandwidth test passed.

Severity: Event

Serviceable: No

Recoverable: No

Automatically notify Support: No

Related Links:

- IBM Support Website
- Latest level of DSA
- Latest level of BMC/IMM

409-004-000 Nvidia::DiagnosticServiceProvider::Query Test Passed

Explanation: Nvidia GPU Query test passed.

Severity: Event

Serviceable: No

Recoverable: No

Automatically notify Support: No

Related Links:

- IBM Support Website
- Latest level of DSA
- Latest level of BMC/IMM

409-005-000 Nvidia::DiagnosticServiceProvider::Matrix Test Passed

Explanation: Nvidia GPU Matrix test passed.

Severity: Event

Serviceable: No

Recoverable: No

Automatically notify Support: No

Related Links:

- IBM Support Website
- Latest level of DSA
- Latest level of BMC/IMM

409-006-000 Nvidia::DiagnosticServiceProvider::Binomial Test Passed

Explanation: Nvidia GPU Binomial test passed.

Severity: Event

Serviceable: No

Recoverable: No

Automatically notify Support: No

Related Links:

- IBM Support Website
- Latest level of DSA
- Latest level of BMC/IMM

409-800-000 NVIDIA User Diagnostic Test Aborted

Explanation: NVIDIA User Diagnostic test was canceled.

Severity: Event

Serviceable: No

Recoverable: No

Automatically notify Support: No

Related Links:

- IBM Support Website
- Latest level of DSA
- Latest level of BMC/IMM

409-803-000 Nvidia::DiagnosticServiceProvider::Bandwidth Test Aborted

Explanation: Nvidia GPU Bandwidth test was canceled.

Severity: Warning

Serviceable: No

Recoverable: No

Automatically notify Support: No

Related Links:

- IBM Support Website
- Latest level of DSA
- Latest level of BMC/IMM

409-804-000 Nvidia::DiagnosticServiceProvider::Query Test Aborted

Explanation: Nvidia GPU Query test was canceled.

Severity: Warning

Serviceable: No

Recoverable: No

Automatically notify Support: No

Related Links:

- IBM Support Website
- Latest level of DSA
- Latest level of BMC/IMM

409-805-000 Nvidia::DiagnosticServiceProvider::Matrix Test Aborted

Explanation: Nvidia GPU Matrix test was canceled.

Severity: Warning

Serviceable: No

Recoverable: No

Automatically notify Support: No

Related Links:

- IBM Support Website
- Latest level of DSA
- Latest level of BMC/IMM

409-806-000 Nvidia::DiagnosticServiceProvider::Binomial Test Aborted

Explanation: Nvidia GPU Binomial test was canceled.

Severity: Warning

Serviceable: No

Recoverable: No

Automatically notify Support: No

Related Links:

- IBM Support Website
- Latest level of DSA
- Latest level of BMC/IMM

409-900-000 NVIDIA User Diagnostic Test Failed

Explanation: NVIDIA User Diagnostic Test Failed.

Severity: Event

Serviceable: Yes

Recoverable: No

Automatically notify Support: No

User response: Complete the following steps:

1. Verify that the GPU is seated in the PCIe slot correctly by reseating the GPU. Then power cycle the system.
2. Verify that the power connectors to the GPU are connected firmly. Then power cycle the system.
3. Run nvidia-smi -q In some cases this will report a poorly connected power cable.
4. Rerun the diagnostics, using the same GPU, on system that is known to be working. A variety of system issues can cause diagnostic failure.
5. If the problem remains, contact your IBM technical-support representative.

Related Links:

- IBM Support Website
- Latest level of DSA
- Latest level of BMC/IMM

409-903-000 Nvidia::DiagnosticServiceProvider::Bandwidth Test Failed

Explanation: Nvidia GPU Bandwidth Test Failed.

Severity: Error

Serviceable: Yes

Recoverable: No

Automatically notify Support: No

User response: Complete the following steps:

1. Verify that the GPU is seated in the PCIe slot correctly by reseating the GPU. Then power cycle the system.
2. Verify that the power connectors to the GPU are connected firmly. Then power cycle the system.
3. Run nvidia-smi -q In some cases this will report a poorly connected power cable.
4. Rerun the diagnostics, using the same GPU, on system that is known to be working. A variety of system issues can cause diagnostic failure.
5. If the problem remains, contact your IBM technical-support representative.

Related Links:

- IBM Support Website
- Latest level of DSA
- Latest level of BMC/IMM

409-904-000 Nvidia::DiagnosticServiceProvider::Query Test Failed

Explanation: Nvidia GPU Query Test Failed.

Severity: Error

Serviceable: Yes

Recoverable: No

Automatically notify Support: No

User response: Complete the following steps:

1. Verify that the GPU is seated in the PCIe slot correctly by reseating the GPU. Then power cycle the system.
2. Verify that the power connectors to the GPU are connected firmly. Then power cycle the system.
3. Run nvidia-smi -q In some cases this will report a poorly connected power cable.
4. Rerun the diagnostics, using the same GPU, on system that is known to be working. A variety of system issues can cause diagnostic failure.
5. If the problem remains, contact your IBM technical-support representative.

Related Links:

- IBM Support Website
- Latest level of DSA
- Latest level of BMC/IMM

409-905-000 Nvidia::DiagnosticServiceProvider::Matrix Test Failed

Explanation: Nvidia GPU Matrix Test Failed.

Severity: Error

Serviceable: Yes

Recoverable: No

Automatically notify Support: No

User response: Complete the following steps:

1. Verify that the GPU is seated in the PCIe slot correctly by reseating the GPU. Then power cycle the system.

2. Verify that the power connectors to the GPU are connected firmly. Then power cycle the system.
3. Run nvidia-smi -q In some cases this will report a poorly connected power cable.
4. Rerun the diagnostics, using the same GPU, on system that is known to be working. A variety of system issues can cause diagnostic failure.
5. If the problem remains, contact your IBM technical-support representative.

Related Links:

- IBM Support Website
- Latest level of DSA
- Latest level of BMC/IMM

409-906-000 Nvidia::DiagnosticServiceProvider::Binomial Test Failed

Explanation: Nvidia GPU Binomial Test Failed.

Severity: Error

Serviceable: Yes

Recoverable: No

Automatically notify Support: No

User response: Complete the following steps:

1. Verify that the GPU is seated in the PCIe slot correctly by reseating the GPU. Then power cycle the system.
2. Verify that the power connectors to the GPU are connected firmly. Then power cycle the system.
3. Run nvidia-smi -q In some cases this will report a poorly connected power cable.
4. Rerun the diagnostics, using the same GPU, on system that is known to be working. A variety of system issues can cause diagnostic failure.
5. If the problem remains, contact your IBM technical-support representative.

Related Links:

- IBM Support Website
- Latest level of DSA
- Latest level of BMC/IMM

DSA system management test results

The following messages can result when you run the system management test.

166-000-001 IMM I2C Test Passed

Explanation: IMM I2C Test Passed.

Severity: Event

Serviceable: No

Recoverable: No

Automatically notify Support: No

Related Links:

- IBM Support Website
- Latest level of DSA
- Latest level of BMC/IMM

166-801-001 IMM I2C Test Aborted

Explanation: IMM returned incorrect response length.

Severity: Warning

Serviceable: Yes

Recoverable: No

Automatically notify Support: No

User response: Perform the actions mentioned one at a time and try the test after each action:

1. Turn off the system and disconnect it from power. Wait for 45 seconds. Reconnect it to power.
2. Make sure that DSA and BMC/IMM are at the latest level.

Related Links:

- IBM Support Website
- Latest level of DSA
- Latest level of BMC/IMM

166-802-001 IMM I2C Test Aborted

Explanation: Test cannot be completed for unknown reason.

Severity: Warning

Serviceable: Yes

Recoverable: No

Automatically notify Support: No

User response: Perform the actions mentioned one at a time and try the test after each action:

1. Turn off the system and disconnect it from power. Wait for 45 seconds. Reconnect it to power.
2. Make sure that DSA and BMC/IMM are at the latest level.

Related Links:

- IBM Support Website
- Latest level of DSA
- Latest level of BMC/IMM

166-803-001 IMM I2C Test Aborted

Explanation: Node Busy. Try later.

Severity: Warning

Serviceable: Yes

Recoverable: No

Automatically notify Support: No

User response: Perform the actions mentioned one at a time and try the test after each action:

1. Turn off the system and disconnect it from power. Wait for 45 seconds. Reconnect it to power.
2. Make sure that DSA and BMC/IMM are at the latest level.

Related Links:

- IBM Support Website
- Latest level of DSA
- Latest level of BMC/IMM

166-804-001 IMM I2C Test Aborted

Explanation: Invalid Command.

Severity: Warning

Serviceable: Yes

Recoverable: No

Automatically notify Support: No

User response: Perform the actions mentioned one at a time and try the test after each action:

1. Turn off the system and disconnect it from power. Wait for 45 seconds. Reconnect it to power.
2. Make sure that DSA and BMC/IMM are at the latest level.

Related Links:

- IBM Support Website
- Latest level of DSA
- Latest level of BMC/IMM

166-805-001 IMM I2C Test Aborted

Explanation: Invalid Command for given LUN.

Severity: Warning

Serviceable: Yes

Recoverable: No

Automatically notify Support: No

User response: Perform the actions mentioned one at a time and try the test after each action:

1. Turn off the system and disconnect it from power. Wait for 45 seconds. Reconnect it to power.
2. Make sure that DSA and BMC/IMM are at the latest level.

Related Links:

- IBM Support Website
- Latest level of DSA
- Latest level of BMC/IMM

166-806-001 IMM I2C Test Aborted

Explanation: Timeout while processing command.

Severity: Warning

Serviceable: Yes

Recoverable: No

Automatically notify Support: No

User response: Perform the actions mentioned one at a time and try the test after each action:

1. Turn off the system and disconnect it from power. Wait for 45 seconds. Reconnect it to power.
2. Make sure that DSA and BMC/IMM are at the latest level.

Related Links:

- IBM Support Website
- Latest level of DSA
- Latest level of BMC/IMM

166-807-001 IMM I2C Test Aborted

Explanation: Out of space.

Severity: Warning

Serviceable: Yes

Recoverable: No

Automatically notify Support: No

User response: Perform the actions mentioned one at a time and try the test after each action:

1. Turn off the system and disconnect it from power. Wait for 45 seconds. Reconnect it to power.
2. Make sure that DSA and BMC/IMM are at the latest level.

Related Links:

- IBM Support Website
- Latest level of DSA
- Latest level of BMC/IMM

166-808-001 IMM I2C Test Aborted

Explanation: Reservation Canceled or Invalid Reservation ID.

Severity: Warning

Serviceable: Yes

Recoverable: No

Automatically notify Support: No

User response: Perform the actions mentioned one at a time and try the test after each action:

1. Turn off the system and disconnect it from power. Wait for 45 seconds. Reconnect it to power.
2. Make sure that DSA and BMC/IMM are at the latest level.

Related Links:

- IBM Support Website
- Latest level of DSA
- Latest level of BMC/IMM

166-809-001 IMM I2C Test Aborted

Explanation: Request data truncated.

Severity: Warning

Serviceable: Yes

Recoverable: No

Automatically notify Support: No

User response: Perform the actions mentioned one at a time and try the test after each action:

1. Turn off the system and disconnect it from power. Wait for 45 seconds. Reconnect it to power.
2. Make sure that DSA and BMC/IMM are at the latest level.

Related Links:

- IBM Support Website
- Latest level of DSA
- Latest level of BMC/IMM

166-810-001 IMM I2C Test Aborted

Explanation: Request data length invalid.

Severity: Warning

Serviceable: Yes

Recoverable: No

Automatically notify Support: No

User response: Perform the actions mentioned one at a time and try the test after each action:

1. Turn off the system and disconnect it from power. Wait for 45 seconds. Reconnect it to power.
2. Make sure that DSA and BMC/IMM are at the latest level.

Related Links:

- IBM Support Website
- Latest level of DSA
- Latest level of BMC/IMM

166-811-001 IMM I2C Test Aborted

Explanation: Request data field length limit exceeded.

Severity: Warning

Serviceable: Yes

Recoverable: No

Automatically notify Support: No

User response: Perform the actions mentioned one at a time and try the test after each action:

1. Turn off the system and disconnect it from power. Wait for 45 seconds. Reconnect it to power.
2. Make sure that DSA and BMC/IMM are at the latest level.

Related Links:

- IBM Support Website
- Latest level of DSA
- Latest level of BMC/IMM

166-812-001 IMM I2C Test Aborted

Explanation: Parameter out of range.

Severity: Warning

Serviceable: Yes

Recoverable: No

Automatically notify Support: No

User response: Perform the actions mentioned one at a time and try the test after each action:

1. Turn off the system and disconnect it from power. Wait for 45 seconds. Reconnect it to power.
2. Make sure that DSA and BMC/IMM are at the latest level.

Related Links:

- IBM Support Website
- Latest level of DSA
- Latest level of BMC/IMM

166-813-001 IMM I2C Test Aborted

Explanation: Cannot return number of requested data bytes.

Severity: Warning

Serviceable: Yes

Recoverable: No

Automatically notify Support: No

User response: Perform the actions mentioned one at a time and try the test after each action:

1. Turn off the system and disconnect it from power. Wait for 45 seconds. Reconnect it to power.

2. Make sure that DSA and BMC/IMM are at the latest level.

Related Links:
- IBM Support Website
- Latest level of DSA
- Latest level of BMC/IMM

166-814-001 IMM I2C Test Aborted

Explanation: Requested Sensor, data, or record not present.

Severity: Warning

Serviceable: Yes

Recoverable: No

Automatically notify Support: No

User response: Perform the actions mentioned one at a time and try the test after each action:
1. Turn off the system and disconnect it from power. Wait for 45 seconds. Reconnect it to power.
2. Make sure that DSA and BMC/IMM are at the latest level.

Related Links:
- IBM Support Website
- Latest level of DSA
- Latest level of BMC/IMM

166-815-001 IMM I2C Test Aborted

Explanation: Invalid data field in Request.

Severity: Warning

Serviceable: Yes

Recoverable: No

Automatically notify Support: No

User response: Perform the actions mentioned one at a time and try the test after each action:
1. Turn off the system and disconnect it from power. Wait for 45 seconds. Reconnect it to power.
2. Make sure that DSA and BMC/IMM are at the latest level.

Related Links:
- IBM Support Website
- Latest level of DSA
- Latest level of BMC/IMM

166-816-001 IMM I2C Test Aborted

Explanation: Command illegal for specified sensor or record type.

Severity: Warning

Serviceable: Yes

Recoverable: No

Automatically notify Support: No

User response: Perform the actions mentioned one at a time and try the test after each action:
1. Turn off the system and disconnect it from power. Wait for 45 seconds. Reconnect it to power.
2. Make sure that DSA and BMC/IMM are at the latest level.

Related Links:
- IBM Support Website
- Latest level of DSA
- Latest level of BMC/IMM

166-817-001 IMM I2C Test Aborted

Explanation: Command response could not be provided.

Severity: Warning

Serviceable: Yes

Recoverable: No

Automatically notify Support: No

User response: Perform the actions mentioned one at a time and try the test after each action:
1. Turn off the system and disconnect it from power. Wait for 45 seconds. Reconnect it to power.
2. Make sure that DSA and BMC/IMM are at the latest level.

Related Links:
- IBM Support Website
- Latest level of DSA
- Latest level of BMC/IMM

166-818-001 IMM I2C Test Aborted

Explanation: Cannot execute duplicated request.

Severity: Warning

Serviceable: Yes

Recoverable: No

Automatically notify Support: No

User response: Perform the actions mentioned one at a time and try the test after each action:
1. Turn off the system and disconnect it from power. Wait for 45 seconds. Reconnect it to power.
2. Make sure that DSA and BMC/IMM are at the latest level.

Related Links:
- IBM Support Website
- Latest level of DSA
- Latest level of BMC/IMM

166-819-001 IMM I2C Test Aborted

Explanation: Command response could not be provided. SDR Repository in?update mode.

Severity: Warning

Serviceable: Yes

Recoverable: No

Automatically notify Support: No

User response: Perform the actions mentioned one at a time and try the test after each action:
1. Turn off the system and disconnect it from power. Wait for 45 seconds. Reconnect it to power.
2. Make sure that DSA and BMC/IMM are at the latest level.

Related Links:
- IBM Support Website

- Latest level of DSA
- Latest level of BMC/IMM

166-820-001 IMM I2C Test Aborted

Explanation: Command response could not be provided. Device in firmware update mode.

Severity: Warning

Serviceable: Yes

Recoverable: No

Automatically notify Support: No

User response: Perform the actions mentioned one at a time and try the test after each action:

1. Turn off the system and disconnect it from power. Wait for 45 seconds. Reconnect it to power.
2. Make sure that DSA and BMC/IMM are at the latest level.

Related Links:

- IBM Support Website
- Latest level of DSA
- Latest level of BMC/IMM

166-821-001 IMM I2C Test Aborted

Explanation: Command response could not be provided. BMC initialization in progress.

Severity: Warning

Serviceable: Yes

Recoverable: No

Automatically notify Support: No

User response: Perform the actions mentioned one at a time and try the test after each action:

1. Turn off the system and disconnect it from power. Wait for 45 seconds. Reconnect it to power.
2. Make sure that DSA and BMC/IMM are at the latest level.

Related Links:

- IBM Support Website
- Latest level of DSA
- Latest level of BMC/IMM

166-822-001 IMM I2C Test Aborted

Explanation: Destination unavailable.

Severity: Warning

Serviceable: Yes

Recoverable: No

Automatically notify Support: No

User response: Perform the actions mentioned one at a time and try the test after each action:

1. Turn off the system and disconnect it from power. Wait for 45 seconds. Reconnect it to power.
2. Make sure that DSA and BMC/IMM are at the latest level.

Related Links:

- IBM Support Website
- Latest level of DSA
- Latest level of BMC/IMM

166-823-001 IMM I2C Test Aborted

Explanation: Cannot execute command. Insufficient privilege level.

Severity: Warning

Serviceable: Yes

Recoverable: No

Automatically notify Support: No

User response: Perform the actions mentioned one at a time and try the test after each action:

1. Turn off the system and disconnect it from power. Wait for 45 seconds. Reconnect it to power.
2. Make sure that DSA and BMC/IMM are at the latest level.

Related Links:

- IBM Support Website
- Latest level of DSA
- Latest level of BMC/IMM

166-824-001 IMM I2C Test Aborted

Explanation: Cannot execute command.

Severity: Warning

Serviceable: Yes

Recoverable: No

Automatically notify Support: No

User response: Perform the actions mentioned one at a time and try the test after each action:

1. Turn off the system and disconnect it from power. Wait for 45 seconds. Reconnect it to power.
2. Make sure that DSA and BMC/IMM are at the latest level.

Related Links:

- IBM Support Website
- Latest level of DSA
- Latest level of BMC/IMM

166-901-001 IMM I2C Test Failed

Explanation: IMM Indicates failure in RTMM bus (BUS 0).

Severity: Error

Serviceable: Yes

Recoverable: No

Automatically notify Support: No

User response: Perform the actions mentioned one at a time and try the test after each action:

1. Turn off the system and disconnect it from power. Wait for 45 seconds. Reconnect it to power.
2. Make sure that DSA and BMC/IMM are at the latest level.
3. Run the test again.
4. If failure remains, refer to "Troubleshooting by symptom" in the system "Installation and Service Guide" for the next corrective action.

Related Links:

- IBM Support Website
- Latest level of DSA

- Latest level of BMC/IMM

166-902-001 IMM I2C Test Failed

Explanation: IMM Indicates failure in TPM bus (BUS 1).

Severity: Error

Serviceable: Yes

Recoverable: No

Automatically notify Support: No

User response: Perform the actions mentioned one at a time and try the test after each action:

1. Turn off the system and disconnect it from power. Wait for 45 seconds. Reconnect it to power.
2. Make sure that DSA and BMC/IMM are at the latest level.
3. Run the test again.
4. If failure remains, refer to "Troubleshooting by symptom" in the system "Installation and Service Guide" for the next corrective action.

Related Links:

- IBM Support Website
- Latest level of DSA
- Latest level of BMC/IMM

166-903-001 IMM I2C Test Failed

Explanation: IMM Indicates failure in FPGA bus (BUS 2).

Severity: Error

Serviceable: Yes

Recoverable: No

Automatically notify Support: No

User response: Perform the actions mentioned one at a time and try the test after each action:

1. Turn off the system and disconnect it from power. Wait for 45 seconds. Reconnect it to power.
2. Make sure that DSA and BMC/IMM are at the latest level.
3. Run the test again.
4. If failure remains, refer to "Troubleshooting by symptom" in the system "Installation and Service Guide" for the next corrective action.

Related Links:

- IBM Support Website
- Latest level of DSA
- Latest level of BMC/IMM

166-904-001 IMM I2C Test Failed

Explanation: IMM Indicates failure in Lightpath bus (BUS 3).

Severity: Error

Serviceable: Yes

Recoverable: No

Automatically notify Support: No

User response: Perform the actions mentioned one at a time and try the test after each action:

1. Turn off the system and disconnect it from power. Wait for 45 seconds. Reconnect it to power.

2. Make sure that DSA and BMC/IMM are at the latest level.
3. Run the test again.
4. If failure remains, refer to "Troubleshooting by symptom" in the system "Installation and Service Guide" for the next corrective action.

Related Links:

- IBM Support Website
- Latest level of DSA
- Latest level of BMC/IMM

166-905-001 IMM I2C Test Failed

Explanation: IMM Indicates failure in SAS/SEP/BP bus (BUS 4).

Severity: Error

Serviceable: Yes

Recoverable: No

Automatically notify Support: No

User response: Perform the actions mentioned one at a time and try the test after each action:

1. Turn off the system and disconnect it from power. Wait for 45 seconds. Reconnect it to power.
2. Make sure that DSA and BMC/IMM are at the latest level.
3. Run the test again.
4. If failure remains, refer to "Troubleshooting by symptom" in the system "Installation and Service Guide" for the next corrective action.

Related Links:

- IBM Support Website
- Latest level of DSA
- Latest level of BMC/IMM

166-906-001 IMM I2C Test Failed

Explanation: IMM Indicates failure in Patsburg bus (BUS 5).

Severity: Error

Serviceable: Yes

Recoverable: No

Automatically notify Support: No

User response: Perform the actions mentioned one at a time and try the test after each action:

1. Turn off the system and disconnect it from power. Wait for 45 seconds. Reconnect it to power.
2. Make sure that DSA and BMC/IMM are at the latest level.
3. Run the test again.
4. If failure remains, refer to "Troubleshooting by symptom" in the system "Installation and Service Guide" for the next corrective action.

Related Links:

- IBM Support Website
- Latest level of DSA
- Latest level of BMC/IMM

166-907-001 IMM I2C Test Failed

Explanation: IMM Indicates failure in Mezz card bus (BUS 6).

Severity: Error

Serviceable: Yes

Recoverable: No

Automatically notify Support: No

User response: Perform the actions mentioned one at a time and try the test after each action:

1. Turn off the system and disconnect it from power. Wait for 45 seconds. Reconnect it to power.
2. Make sure that DSA and BMC/IMM are at the latest level.
3. Run the test again.
4. If failure remains, refer to "Troubleshooting by symptom" in the system "Installation and Service Guide" for the next corrective action.

Related Links:

- IBM Support Website
- Latest level of DSA
- Latest level of BMC/IMM

DSA checkpoint panel test results

The following messages can result when you run the checkpoint panel test.

180-000-000 Check-point Panel Test Passed

Explanation: Check-point Panel Test Passed.

Severity: Event

Serviceable: No

Recoverable: No

Automatically notify Support: No

Related Links:

- IBM Support Website
- Latest level of DSA
- Latest level of BMC/IMM

180-801-000 Check-point Panel Test Aborted

Explanation: Check-point Panel Test Aborted. BMC is unable to verify that the operator information panel cable is connected.

Severity: Warning

Serviceable: Yes

Recoverable: No

Automatically notify Support: No

User response: Complete the following steps:

1. Inspect and reseat operator information panel cable at both ends.
2. Verify that the Baseboard Management Controller (BMC) is working.
3. Run the test again.
4. If failure remains, refer to "Troubleshooting by symptom" in the system "Installation and Service Guide" for the next corrective action.

Related Links:

- IBM Support Website
- Latest level of DSA
- Latest level of BMC/IMM

180-901-000 Check-point Panel Test Failed

Explanation: Check-point Panel Test Failed. Operator reported incorrect display.

Severity: Error

Serviceable: Yes

Recoverable: No

Automatically notify Support: No

User response: Complete the following steps:

1. Check the operator information panel cabling for loose or broken connections at both ends or damage to the cable.
2. Replace the information panel cable if damage is present.
3. Run the test again.
4. Replace the operator information panel assembly.
5. Run the test again.
6. If failure remains, refer to "Troubleshooting by symptom" in the system "Installation and Service Guide" for the next corrective action.

Related Links:

- IBM Support Website
- Latest level of DSA
- Latest level of BMC/IMM

DSA Broadcom network test results

The following messages can result when you run the Broadcom network test.

405-000-000 BRCM:TestControlRegisters Test Passed

Explanation: The test passed.

Severity: Event

Serviceable: No

Recoverable: No

Automatically notify Support: No

Related Links:

- IBM Support Website
- Latest level of DSA
- Latest level of BMC/IMM

405-001-000 BRCM:TestMIIRegisters Test Passed

Explanation: The test passed.

Severity: Event

Serviceable: No

Recoverable: No

Automatically notify Support: No

Related Links:

- IBM Support Website
- Latest level of DSA
- Latest level of BMC/IMM

405-002-000 BRCM:TestEEPROM Test Passed

Explanation: The test passed.

Severity: Event

Serviceable: No

Recoverable: No

Automatically notify Support: No

Related Links:
- IBM Support Website
- Latest level of DSA
- Latest level of BMC/IMM

405-003-000 BRCM:TestInternalMemory Test Passed

Explanation: The test passed.

Severity: Event

Serviceable: No

Recoverable: No

Automatically notify Support: No

Related Links:
- IBM Support Website
- Latest level of DSA
- Latest level of BMC/IMM

405-004-000 BRCM:TestInterrupt Test Passed

Explanation: The test passed.

Severity: Event

Serviceable: No

Recoverable: No

Automatically notify Support: No

Related Links:
- IBM Support Website
- Latest level of DSA
- Latest level of BMC/IMM

405-005-000 BRCM:TestLoopbackMAC Test Passed

Explanation: The test passed.

Severity: Event

Serviceable: No

Recoverable: No

Automatically notify Support: No

Related Links:
- IBM Support Website
- Latest level of DSA
- Latest level of BMC/IMM

405-006-000 BRCM:TestLoopbackPhysical Test Passed

Explanation: The test passed.

Severity: Event

Serviceable: No

Recoverable: No

Automatically notify Support: No

Related Links:
- IBM Support Website
- Latest level of DSA
- Latest level of BMC/IMM

405-007-000 BRCM:TestLEDs Test Passed

Explanation: The test passed.

Severity: Event

Serviceable: No

Recoverable: No

Automatically notify Support: No

Related Links:
- IBM Support Website
- Latest level of DSA
- Latest level of BMC/IMM

405-800-000 BRCM:TestControlRegisters Test Aborted

Explanation: The control registers test was canceled.

Severity: Warning

Serviceable: No

Recoverable: No

Automatically notify Support: No

Related Links:
- IBM Support Website
- Latest level of DSA
- Latest level of BMC/IMM

405-801-000 BRCM:TestMIIRegisters Test Aborted

Explanation: The MII register test was canceled.

Severity: Warning

Serviceable: No

Recoverable: No

Automatically notify Support: No

Related Links:
- IBM Support Website
- Latest level of DSA
- Latest level of BMC/IMM

405-802-000 BRCM:TestEEPROM Test Aborted

Explanation: The EEPROM test was canceled.

Severity: Warning

Serviceable: No

Recoverable: No

Automatically notify Support: No

Related Links:
- IBM Support Website
- Latest level of DSA
- Latest level of BMC/IMM

405-803-000 BRCM:TestInternalMemory Test Aborted

Explanation: The internal memory test was canceled.

Severity: Warning

Serviceable: No

Recoverable: No

Automatically notify Support: No

Related Links:
- IBM Support Website
- Latest level of DSA
- Latest level of BMC/IMM

405-804-000 BRCM:TestInterrupt Test Aborted

Explanation: The interrupt test was canceled.

Severity: Warning

Serviceable: No

Recoverable: No

Automatically notify Support: No

Related Links:
- IBM Support Website
- Latest level of DSA
- Latest level of BMC/IMM

405-805-000 BRCM:TestLoopbackMAC Test Aborted

Explanation: Loopback testing at the MAC layer was canceled.

Severity: Warning

Serviceable: No

Recoverable: No

Automatically notify Support: No

Related Links:
- IBM Support Website
- Latest level of DSA
- Latest level of BMC/IMM

405-806-000 BRCM:TestLoopbackPhysical Test Aborted

Explanation: Loopback testing at the physical layer was canceled.

Severity: Warning

Serviceable: No

Recoverable: No

Automatically notify Support: No

Related Links:
- IBM Support Website
- Latest level of DSA
- Latest level of BMC/IMM

405-807-000 BRCM:TestLEDs Test Aborted

Explanation: Verification of status LEDs was canceled.

Severity: Warning

Serviceable: No

Recoverable: No

Automatically notify Support: No

Related Links:
- IBM Support Website
- Latest level of DSA
- Latest level of BMC/IMM

405-900-000 BRCM:TestControlRegisters Test Failed

Explanation: A failure was detected while testing internal MAC registers

Severity: Error

Serviceable: Yes

Recoverable: No

Automatically notify Support: No

User response: Complete the following steps:
1. Check component firmware level and upgrade if necessary. The installed firmware level can be found in the DSA Diagnostic Event Log within the Firmware/VPD section for this component.
2. Rerun the test.
3. If failure remains, refer to "Troubleshooting by symptom" in the system "Installation and Service Guide" for the next corrective action.

Related Links:
- IBM Support Website
- Latest level of DSA

- Latest level of BMC/IMM

405-901-000 BRCM:TestMIIRegisters Test Failed

Explanation: A failure was detected while testing internal PHY registers.

Severity: Error

Serviceable: Yes

Recoverable: No

Automatically notify Support: No

User response: Complete the following steps:

1. Check component firmware level and upgrade if necessary. The installed firmware level can be found in the DSA Diagnostic Event Log within the Firmware/VPD section for this component.
2. Rerun the test.
3. If failure remains, refer to "Troubleshooting by symptom" in the system "Installation and Service Guide" for the next corrective action.

Related Links:

- IBM Support Website
- Latest level of DSA
- Latest level of BMC/IMM

405-902-000 BRCM:TestEEPROM Test Failed

Explanation: A failure was detected while testing non-volatile RAM.

Severity: Error

Serviceable: Yes

Recoverable: No

Automatically notify Support: No

User response: Complete the following steps:

1. Check component firmware level and upgrade if necessary. The installed firmware level can be found in the DSA Diagnostic Event Log within the Firmware/VPD section for this component.
2. Rerun the test.
3. If failure remains, refer to "Troubleshooting by symptom" in the system "Installation and Service Guide" for the next corrective action.

Related Links:

- IBM Support Website
- Latest level of DSA
- Latest level of BMC/IMM

405-903-000 BRCM:TestInternalMemory Test Failed

Explanation: A failure was detected while testing internal memory.

Severity: Error

Serviceable: Yes

Recoverable: No

Automatically notify Support: No

User response: Complete the following steps:

1. Check component firmware level and upgrade if necessary. The installed firmware level can be found in the DSA Diagnostic Event Log within the Firmware/VPD section for this component.

2. Rerun the test.
3. If failure remains, refer to "Troubleshooting by symptom" in the system "Installation and Service Guide" for the next corrective action.

Related Links:

- IBM Support Website
- Latest level of DSA
- Latest level of BMC/IMM

405-904-000 BRCM:TestInterrupt Test Failed

Explanation: A failure was detected while testing interrupts.

Severity: Error

Serviceable: Yes

Recoverable: No

Automatically notify Support: No

User response: Complete the following steps:

1. Check component firmware level and upgrade if necessary. The installed firmware level can be found in the DSA Diagnostic Event Log within the Firmware/VPD section for this component.
2. Rerun the test.
3. If failure remains, refer to "Troubleshooting by symptom" in the system "Installation and Service Guide" for the next corrective action.

Related Links:

- IBM Support Website
- Latest level of DSA
- Latest level of BMC/IMM

405-905-000 BRCM:TestLoopbackMAC Test Failed

Explanation: BRCM:TestLoopbackMAC Test Failed.

Severity: Error

Serviceable: Yes

Recoverable: No

Automatically notify Support: No

User response: Complete the following steps:

1. Check component firmware level and upgrade if necessary. The installed firmware level can be found in the DSA Diagnostic Event Log within the Firmware/VPD section for this component.
2. Rerun the test.
3. If failure remains, refer to "Troubleshooting by symptom" in the system "Installation and Service Guide" for the next corrective action.

Related Links:

- IBM Support Website
- Latest level of DSA
- Latest level of BMC/IMM

405-906-000 BRCM:TestLoopbackPhysical Test Failed

Explanation: A failure was detected during the loopback test at the physical layer.

Severity: Error

Serviceable: Yes

Recoverable: No

Automatically notify Support: No

User response: Complete the following steps:

1. Check component firmware level and upgrade if necessary. The installed firmware level can be found in the DSA Diagnostic Event Log within the Firmware/VPD section for this component.
2. Rerun the test.
3. If failure remains, refer to "Troubleshooting by symptom" in the system "Installation and Service Guide" for the next corrective action.

Related Links:

- IBM Support Website
- Latest level of DSA
- Latest level of BMC/IMM

405-907-000 BRCM:TestLEDs Test Failed

Explanation: A failure was detected while verifying operation of the status LEDs.

Severity: Error

Serviceable: Yes

Recoverable: No

Automatically notify Support: No

User response: Complete the following steps:

1. Check component firmware level and upgrade if necessary. The installed firmware level can be found in the DSA Diagnostic Event Log within the Firmware/VPD section for this component.
2. Rerun the test.
3. If failure remains, refer to "Troubleshooting by symptom" in the system "Installation and Service Guide" for the next corrective action.

Related Links:

- IBM Support Website
- Latest level of DSA
- Latest level of BMC/IMM

DSA Brocade test results

The following messages can result when you run the Brocade test.

218-000-000 Brocade:MemoryTest Passed

Explanation: The test passed.

Severity: Event

Serviceable: No

Recoverable: No

Automatically notify Support: No

Related Links:

- IBM Support Website

- Latest level of DSA
- Latest level of BMC/IMM

218-001-000 Brocade:ExternalLoopbackTest Passed

Explanation: The test passed.

Severity: Event

Serviceable: No

Recoverable: No

Automatically notify Support: No

Related Links:

- IBM Support Website
- Latest level of DSA
- Latest level of BMC/IMM

218-002-000 Brocade:SerdesLoopbackTest Passed

Explanation: The test passed.

Severity: Event

Serviceable: No

Recoverable: No

Automatically notify Support: No

Related Links:

- IBM Support Website
- Latest level of DSA
- Latest level of BMC/IMM

218-003-000 Brocade:PCILoopbackTest Passed

Explanation: The test passed.

Severity: Event

Serviceable: No

Recoverable: No

Automatically notify Support: No

Related Links:

- IBM Support Website
- Latest level of DSA
- Latest level of BMC/IMM

218-004-000 Brocade:ExternalEthLoopbackTest Passed

Explanation: The test passed.

Severity: Event

Serviceable: No

Recoverable: No

Automatically notify Support: No

Related Links:

- IBM Support Website
- Latest level of DSA
- Latest level of BMC/IMM

218-005-000 Brocade:SerdesEthLoopbackTest Passed

Explanation: The test passed.

Severity: Event

Serviceable: No

Recoverable: No

Automatically notify Support: No

Related Links:
- IBM Support Website
- Latest level of DSA
- Latest level of BMC/IMM

218-006-000 Brocade:InternalLoopbackTest Passed

Explanation: The test passed.

Severity: Event

Serviceable: No

Recoverable: No

Automatically notify Support: No

Related Links:
- IBM Support Website
- Latest level of DSA
- Latest level of BMC/IMM

218-800-000 Brocade:MemoryTest Aborted

Explanation: The test was canceled.

Severity: Warning

Serviceable: No

Recoverable: No

Automatically notify Support: No

Related Links:
- IBM Support Website
- Latest level of DSA
- Latest level of BMC/IMM

218-801-000 Brocade:ExternalLoopbackTest Aborted

Explanation: The test was canceled.

Severity: Warning

Serviceable: No

Recoverable: No

Automatically notify Support: No

Related Links:
- IBM Support Website
- Latest level of DSA
- Latest level of BMC/IMM

218-802-000 Brocade:SerdesLoopbackTest Aborted

Explanation: The test was canceled.

Severity: Warning

Serviceable: No

Recoverable: No

Automatically notify Support: No

Related Links:
- IBM Support Website
- Latest level of DSA
- Latest level of BMC/IMM

218-803-000 Brocade:PCILoopbackTest Aborted

Explanation: The test was canceled.

Severity: Warning

Serviceable: No

Recoverable: No

Automatically notify Support: No

Related Links:
- IBM Support Website
- Latest level of DSA
- Latest level of BMC/IMM

218-804-000 Brocade:ExternalEthLoopbackTest Aborted

Explanation: The test was canceled.

Severity: Warning

Serviceable: No

Recoverable: No

Automatically notify Support: No

Related Links:
- IBM Support Website
- Latest level of DSA
- Latest level of BMC/IMM

218-805-000 Brocade:SerdesEthLoopbackTest Aborted

Explanation: The test was canceled.

Severity: Warning

Serviceable: No

Recoverable: No

Automatically notify Support: No

Related Links:
- IBM Support Website
- Latest level of DSA
- Latest level of BMC/IMM

218-806-000 Brocade:InternalLoopbackTest Aborted

Explanation: The test was canceled.

Severity: Warning

Serviceable: No

Recoverable: No

Automatically notify Support: No

Related Links:
- IBM Support Website
- Latest level of DSA
- Latest level of BMC/IMM

218-900-000 Brocade:MemoryTest Failed

Explanation: A failure was detected while testing the adapter memory.

Severity: Error

Serviceable: Yes

Recoverable: No

Automatically notify Support: No

User response: Complete the following steps:
1. Rerun the test.
2. Verify whether the firmware is at proper level.
3. Rerun the test.
4. If the problem remains, contact your IBM technical-support representative.

Related Links:
- IBM Support Website
- Latest level of DSA
- Latest level of BMC/IMM

218-901-000 Brocade:ExternalLoopbackTest Failed

Explanation: A failure was detected during the Loopback test.

Severity: Error

Serviceable: Yes

Recoverable: No

Automatically notify Support: No

User response: Complete the following steps:
1. Check cable connections.
2. Rerun the test.
3. Verify whether the firmware is at proper level.
4. Rerun the test.

5. If the problem remains, contact your IBM technical-support representative.

Related Links:
- IBM Support Website
- Latest level of DSA
- Latest level of BMC/IMM

218-902-000 Brocade:SerdesLoopbackTest Failed

Explanation: A failure was detected during the Loopback test.

Severity: Error

Serviceable: Yes

Recoverable: No

Automatically notify Support: No

User response: Complete the following steps:
1. Rerun the test.
2. Verify whether the firmware is at proper level.
3. Rerun the test.
4. If the problem remains, contact your IBM technical-support representative.

Related Links:
- IBM Support Website
- Latest level of DSA
- Latest level of BMC/IMM

218-903-000 Brocade:PCILoopbackTest Failed

Explanation: A failure was detected during the Loopback test.

Severity: Error

Serviceable: Yes

Recoverable: No

Automatically notify Support: No

User response: Complete the following steps:
1. Rerun the test.
2. Verify whether the firmware is at proper level.
3. Rerun the test.
4. If the problem remains, contact your IBM technical-support representative.

Related Links:
- IBM Support Website
- Latest level of DSA
- Latest level of BMC/IMM

218-904-000 Brocade:ExternalEthLoopbackTest Failed

Explanation: A failure was detected during the Loopback test.

Severity: Error

Serviceable: Yes

Recoverable: No

Automatically notify Support: No

User response: Complete the following steps:

1. Check or replace SFP/cable.
2. Rerun the test.
3. Verify whether the firmware is at proper level.
4. Rerun the test.
5. If the problem remains, contact your IBM technical-support representative.

Related Links:

- IBM Support Website
- Latest level of DSA
- Latest level of BMC/IMM

218-905-000 Brocade:SerdesEthLoopbackTest Failed

Explanation: A failure was detected during the Loopback test.

Severity: Error

Serviceable: Yes

Recoverable: No

Automatically notify Support: No

User response: Complete the following steps:

1. Rerun the test.
2. Verify whether the firmware is at proper level.
3. Rerun the test.
4. If the problem remains, contact your IBM technical-support representative.

Related Links:

- IBM Support Website
- Latest level of DSA
- Latest level of BMC/IMM

218-906-000 Brocade:InternalLoopbackTest Failed

Explanation: A failure was detected during the Loopback test.

Severity: Error

Serviceable: Yes

Recoverable: No

Automatically notify Support: No

User response: Complete the following steps:

1. Rerun the test.
2. Verify whether the firmware is at proper level.
3. Rerun the test.
4. If the problem remains, contact your IBM technical-support representative.

Related Links:

- IBM Support Website
- Latest level of DSA
- Latest level of BMC/IMM

DSA Emulex adapter test results

The following messages can result when you run the Emulex adapter test.

516-000-000 ELXUCNA: NIC MAC LoopBackTest Passed

Explanation: The test passed.

Severity: Event

Serviceable: No

Recoverable: No

Automatically notify Support: No

Related Links:

- IBM Support Website
- Latest level of DSA
- Latest level of BMC/IMM

516-001-000 ELXUCNA: NIC PHY LoopBackTest Passed

Explanation: The test passed.

Severity: Event

Serviceable: No

Recoverable: No

Automatically notify Support: No

Related Links:

- IBM Support Website
- Latest level of DSA
- Latest level of BMC/IMM

516-002-000 ELXUCNA: ELXUCNA: NIC LED(Beacon)Test Passed

Explanation: The test passed.

Severity: Event

Serviceable: No

Recoverable: No

Automatically notify Support: No

Related Links:

- IBM Support Website
- Latest level of DSA
- Latest level of BMC/IMM

516-800-000 ELXUCNA: NIC MAC LoopBackTest Aborted

Explanation: Loopback testing at the MAC layer was canceled.

Severity: Warning

Serviceable: No

Recoverable: No

Automatically notify Support: No

Related Links:

- IBM Support Website
- Latest level of DSA
- Latest level of BMC/IMM

516-801-000 ELXUCNA: NIC PHY LoopBackTest Aborted

Explanation: Loopback testing at the physical layer was canceled.

Severity: Warning

Serviceable: No

Recoverable: No

Automatically notify Support: No

Related Links:

- IBM Support Website
- Latest level of DSA
- Latest level of BMC/IMM

516-802-000 ELXUCNA: ELXUCNA: NIC LED(Beacon)Test Aborted

Explanation: Verification of status LEDs was canceled.

Severity: Warning

Serviceable: No

Recoverable: No

Automatically notify Support: No

Related Links:

- IBM Support Website
- Latest level of DSA
- Latest level of BMC/IMM

516-900-000 ELXUCNA: NIC MAC LoopBackTest Failed

Explanation: A failure was detected during the loopback test at the MAC layer.

Severity: Error

Serviceable: Yes

Recoverable: No

Automatically notify Support: No

User response: Complete the following steps:

1. Check component firmware level and upgrade if necessary. The installed firmware level can be found in the DSA Diagnostic Event Log within the Firmware/VPD section for this component.
2. Rerun the test.
3. If failure remains, refer to "Troubleshooting by symptom" in the system "Installation and Service Guide" for the next corrective action.

Related Links:

- IBM Support Website
- Latest level of DSA
- Latest level of BMC/IMM

516-901-000 ELXUCNA: NIC PHY LoopBackTest Failed

Explanation: A failure was detected during the loopback test at the physical layer.

Severity: Error

Serviceable: Yes

Recoverable: No

Automatically notify Support: No

User response: Complete the following steps:

1. Check component firmware level and upgrade if necessary. The installed firmware level can be found in the DSA Diagnostic Event Log within the Firmware/VPD section for this component.
2. Rerun the test.
3. If failure remains, refer to "Troubleshooting by symptom" in the system "Installation and Service Guide" for the next corrective action.

Related Links:

- IBM Support Website
- Latest level of DSA
- Latest level of BMC/IMM

516-902-000 ELXUCNA: ELXUCNA: NIC LED(Beacon)Test Failed

Explanation: A failure was detected while verifying operation of the status LEDs.

Severity: Error

Serviceable: Yes

Recoverable: No

Automatically notify Support: No

User response: Complete the following steps:

1. Check component firmware level and upgrade if necessary. The installed firmware level can be found in the DSA Diagnostic Event Log within the Firmware/VPD section for this component.
2. Rerun the test.
3. If failure remains, refer to "Troubleshooting by symptom" in the system "Installation and Service Guide" for the next corrective action.

Related Links:

- IBM Support Website
- Latest level of DSA
- Latest level of BMC/IMM

DSA Mellanox adapter test results

The following messages can result when you run the Mellanox adapter test.

408-000-000 MLNX:MLNX_DiagnosticTestEthernetPort Test Passed

Explanation: Port Test Passed.

Severity: Event

Serviceable: No

Recoverable: No

Automatically notify Support: No

Related Links:

- IBM Support Website
- Latest level of DSA
- Latest level of BMC/IMM

408-001-000 MLNX:MLNX_DiagnosticTestIBPort Test Passed

Explanation: Port Test Passed.

Severity: Event

Serviceable: No

Recoverable: No

Automatically notify Support: No

Related Links:

- IBM Support Website
- Latest level of DSA
- Latest level of BMC/IMM

408-800-000 MLNX:MLNX_DiagnosticTestEthernetPort Test Aborted

Explanation: Port Test was canceled.

Severity: Warning

Serviceable: No

Recoverable: No

Automatically notify Support: No

Related Links:

- IBM Support Website
- Latest level of DSA
- Latest level of BMC/IMM

408-801-000 MLNX:MLNX_DiagnosticTestIBPort Test Aborted

Explanation: Port Test was canceled.

Severity: Warning

Serviceable: No

Recoverable: No

Automatically notify Support: No

Related Links:

- IBM Support Website
- Latest level of DSA
- Latest level of BMC/IMM

408-900-000 MLNX:MLNX_DiagnosticTestEthernetPort Test Failed

Explanation: Port Test Failed.

Severity: Error

Serviceable: Yes

Recoverable: No

Automatically notify Support: No

User response: Complete the following steps:

1. Make sure that the physical link of the port under test in the active state.
2. If these condition was met but the test keeps failing the port's adapter might be faulty.
3. Try replacing the adapter and repeating the test.

Related Links:

- IBM Support Website
- Latest level of DSA
- Latest level of BMC/IMM

408-901-000 MLNX:MLNX_DiagnosticTestIBPort Test Failed

Explanation: Port Test Failed.

Severity: Error

Serviceable: Yes

Recoverable: No

Automatically notify Support: No

User response: Complete the following steps:

1. Make sure that the physical link of the port under test in the active state and a subnet manager running on the fabric to which the port is attached.
2. If these condition was met but the test keeps failing the port's adapter might be faulty.
3. Try replacing the adapter and repeating the test.

Related Links:

- IBM Support Website
- Latest level of DSA
- Latest level of BMC/IMM

DSA EXA port ping test results

The following messages can result when you run the EXA port ping test.

401-000-000 EXA Port Ping Test Passed

Explanation: EXA Port Ping Test Passed.

Severity: Event

Serviceable: No

Recoverable: No

Automatically notify Support: No

Related Links:

- IBM Support Website
- Latest level of DSA
- Latest level of BMC/IMM

401-801-000 EXA Port Ping Test Aborted

Explanation: EXA Port Ping Test Aborted. Unable to get device base address.

Severity: Warning

Serviceable: Yes

Recoverable: No

Automatically notify Support: No

User response: Complete the following steps:

1. Remove power cables, wait for 45 seconds, reconnect and rerun the test.
2. Make sure that the scalability cable connections are as per specification.
3. Make sure that DSA and BIOS/uEFI are at the latest level.

4. If the problem remains, contact your technical-service representative.

Related Links:
- IBM Support Website
- Latest level of DSA
- Latest level of BMC/IMM

401-802-000 EXA Port Ping Test Aborted

Explanation: EXA Port Ping Test Aborted. Port connections may not be correct.

Severity: Warning

Serviceable: Yes

Recoverable: No

Automatically notify Support: No

User response: Complete the following steps:
1. Remove power cables, wait for 45 seconds, reconnect and rerun the test.
2. Make sure that the scalability cable connections are as per specification.
3. Make sure that DSA and BIOS/uEFI are at the latest level.
4. If the problem remains, contact your technical-service representative.

Related Links:
- IBM Support Website
- Latest level of DSA
- Latest level of BMC/IMM

401-901-001 EXA Port Ping Test Failed

Explanation: EXA Port Ping Test Failed.

Severity: Error

Serviceable: Yes

Recoverable: No

Automatically notify Support: No

User response: Complete the following steps:
1. Remove power cables, wait for 45 seconds, reconnect and rerun the test.
2. Make sure that the scalability cable connections are as per specification.
3. Check scalability cables for loose connections.
4. Replace the scalability cable(s) for specified port(s).
5. If the problem remains, contact your technical-service representative.

Related Links:
- IBM Support Website
- Latest level of DSA
- Latest level of BMC/IMM

DSA Intel network test results

The following messages can result when you run the Intel network test.

406-000-000 IANet:Registers Test Passed

Explanation: The test passed.

Severity: Event

Serviceable: No

Recoverable: No

Automatically notify Support: No

Related Links:

- IBM Support Website
- Latest level of DSA
- Latest level of BMC/IMM

406-001-000 IANet:EEPROM Test Passed

Explanation: The test passed.

Severity: Event

Serviceable: No

Recoverable: No

Automatically notify Support: No

Related Links:

- IBM Support Website
- Latest level of DSA
- Latest level of BMC/IMM

406-002-000 IANet:FIFO Test Passed

Explanation: The test passed.

Severity: Event

Serviceable: No

Recoverable: No

Automatically notify Support: No

Related Links:

- IBM Support Website
- Latest level of DSA
- Latest level of BMC/IMM

406-003-000 IANet:Interrupts Test Passed

Explanation: The test passed.

Severity: Event

Serviceable: No

Recoverable: No

Automatically notify Support: No

Related Links:

- IBM Support Website
- Latest level of DSA
- Latest level of BMC/IMM

406-004-000 IANet:Loopback Test Passed

Explanation: The test passed.

Severity: Event

Serviceable: No

Recoverable: No

Automatically notify Support: No

Related Links:

- IBM Support Website
- Latest level of DSA
- Latest level of BMC/IMM

406-800-000 IANet:Registers Test Aborted

Explanation: Registers test was canceled.

Severity: Warning

Serviceable: No

Recoverable: No

Automatically notify Support: No

Related Links:

- IBM Support Website
- Latest level of DSA
- Latest level of BMC/IMM

406-801-000 IANet:EEPROM Test Aborted

Explanation: EEPROM test was canceled.

Severity: Warning

Serviceable: No

Recoverable: No

Automatically notify Support: No

Related Links:

- IBM Support Website
- Latest level of DSA
- Latest level of BMC/IMM

406-802-000 IANet:FIFO Test Aborted

Explanation: FIFO test was canceled.

Severity: Warning

Serviceable: No

Recoverable: No

Automatically notify Support: No

Related Links:

- IBM Support Website
- Latest level of DSA
- Latest level of BMC/IMM

406-803-000 IANet:Interrupts Test Aborted

Explanation: Interrupt test was canceled.

Severity: Warning

Serviceable: No

Recoverable: No

Automatically notify Support: No

Related Links:

- IBM Support Website
- Latest level of DSA
- Latest level of BMC/IMM

406-804-000 IANet:Loopback Test Aborted

Explanation: Loopback test was canceled.

Severity: Warning

Serviceable: No

Recoverable: No

Automatically notify Support: No

Related Links:

- IBM Support Website
- Latest level of DSA
- Latest level of BMC/IMM

406-900-000 IANet:Registers Test Failed

Explanation: A failure was detected during the Registers test.

Severity: Error

Serviceable: Yes

Recoverable: No

Automatically notify Support: No

User response: Complete the following steps:

1. Check component firmware level and upgrade if necessary. The installed firmware level can be found in the DSA Diagnostic Event Log within the Firmware/VPD section for this component.
2. Rerun the test.
3. If failure remains, refer to "Troubleshooting by symptom" in the system "Installation and Service Guide" for the next corrective action.

Related Links:

- IBM Support Website
- Latest level of DSA
- Latest level of BMC/IMM

406-901-000 IANet:EEPROM Test Failed

Explanation: A failure was detected during the EEPROM test.

Severity: Error

Serviceable: Yes

Recoverable: No

Automatically notify Support: No

User response: Complete the following steps:

1. Check component firmware level and upgrade if necessary. The installed firmware level can be found in the DSA Diagnostic Event Log within the Firmware/VPD section for this component.
2. Rerun the test.
3. If failure remains, refer to "Troubleshooting by symptom" in the system "Installation and Service Guide" for the next corrective action.

Related Links:

- IBM Support Website
- Latest level of DSA
- Latest level of BMC/IMM

406-902-000 IANet:FIFO Test Failed

Explanation: A failure was detected during the FIFO test.

Severity: Error

Serviceable: Yes

Recoverable: No

Automatically notify Support: No

User response: Complete the following steps:

1. Check component firmware level and upgrade if necessary. The installed firmware level can be found in the DSA Diagnostic Event Log within the Firmware/VPD section for this component.
2. Rerun the test.
3. If failure remains, refer to "Troubleshooting by symptom" in the system "Installation and Service Guide" for the next corrective action.

Related Links:

- IBM Support Website
- Latest level of DSA
- Latest level of BMC/IMM

406-903-000 IANet:Interrupts Test Failed

Explanation: A failure was detected during the Interrupt test.

Severity: Error

Serviceable: Yes

Recoverable: No

Automatically notify Support: No

User response: Complete the following steps:

1. Check component firmware level and upgrade if necessary. The installed firmware level can be found in the DSA Diagnostic Event Log within the Firmware/VPD section for this component.
2. Rerun the test.
3. Check interrupt assignments in the PCI Hardware section of the DSA Diagnostic Log. If the ethernet device is sharing interrupts, if possible modify the interrupt assignments using F1 Setup to assign a unique interrupt to the device.
4. Rerun the test.
5. If failure remains, refer to "Troubleshooting by symptom" in the system "Installation and Service Guide" for the next corrective action.

Related Links:

- IBM Support Website
- Latest level of DSA
- Latest level of BMC/IMM

406-904-000 IANet:Loopback Test Failed

Explanation: A failure was detected during the Loopback test.

Severity: Error

Serviceable: Yes

Recoverable: No

Automatically notify Support: No

User response: Complete the following steps:

1. Check the Ethernet cable for damage and ensure correct cable type and attachment.
2. Check component firmware level and upgrade if necessary. The installed firmware level can be found in the DSA Diagnostic Event Log within the Firmware/VPD section for this component.
3. Rerun the test.
4. If failure remains, refer to "Troubleshooting by symptom" in the system "Installation and Service Guide" for the next corrective action.

Related Links:

- IBM Support Website
- Latest level of DSA
- Latest level of BMC/IMM

Event messages

Use this information to review event messages and resolve many errors.

Note: IMM and UEFI events related to communications errors can take up to 20 minutes to be displayed in the CMM event log.

IMM messages

When a hardware event is detected by the IMM on a IBM Flex System x240 Compute Node Types 7863, 8737, 8738, and 8956, the IMM logs that event in the system-event log in the compute node. In addition, the IMM sends that event to the CMM and to the IBM Flex System Manager management software (if installed).

For each event code, the following fields are displayed:

Event identifier
A hexadecimal identifier that uniquely identifies an event or class of events. In this documentation, the event identifiers are prefixed with 0x and followed by eight characters.

Event description
The logged message string that appears for an event. When the event string is displayed in the system-event log, information such as a specific component is displayed. In this documentation, that additional information appears as variables, such as [arg1] or [arg2].

Explanation
Additional information to explain why the event occurred.

Severity

An indication of the level of concern for the condition. In the system-event log, the severity is abbreviated to the first character. The following severities can be displayed:

- **Info:** The event was recorded for audit purposes. This is usually a user action or a change of states that is normal behavior.
- **Warning:** The event is not as severe as an error, but if possible, the condition should be corrected before it becomes an error. It might also be a condition that requires additional monitoring or maintenance.
- **Error:** The event is a failure or critical condition that impairs service or an expected function.

Alert Category

Similar events are grouped in categories. The alert category is in the following format:

severity - device component

severity is one of the following severity levels:

- **Critical:** A key component in the server is no longer functioning.
- **Warning:** The event might progress to a critical level.
- **System:** The event is the result of a system error or a configuration change.

device component is the specific device in the compute node that caused the event to be generated.

Serviceable

Whether user action is required to correct the problem.

CIM Information

The prefix of the message ID and the sequence number that is used by the CIM message registry.

SNMP Trap ID

The SNMP trap ID that is found in the SNMP alert management information base (MIB).

Automatically notify Support

If this field is set to **Yes** and you have enabled Electronic Service Agent™ (ESA) on IBM Flex System Manager management software (if installed), IBM Support will be notified automatically if the event is generated.

If IBM Flex System Manager management software is not installed, you can enable automatic notification of IBM Support from the CMM web interface.

While you wait for IBM Support to call, you can perform the recommended actions for the event.

User response

The actions that you should perform to solve the event.

Perform the steps listed in this section in the order shown until the problem is solved. After you perform all of the actions that are described in this field, if you cannot solve the problem, contact IBM Support.

Note: This list includes error codes and messages that might not apply to this machine type and model.

IMM Events that automatically notify Support

You can configure the IBM Flex System Manager or the CMM to automatically notify Support (also known as *call home*) if certain types of errors are encountered. If you have configured this function, see the table for a list of events that automatically notify Support.

Note: The name of the function for automatically notifying differs slightly between the IBM Flex System Manager management node and the CMM:

- From the IBM Flex System Manager, this function is called Electronic Service Agent.
- From the CMM, this function is called Enable IBM Support.

Table 10. Events that automatically notify Support

Event ID	Message String	Automatically Notify Support
40000086-00000000	Test Call Home Generated by user [arg1].	Yes
40000087-00000000	Manual Call Home by user [arg1]: [arg2].	Yes
80010202-0701ffff	Numeric sensor [NumericSensorElementName] going low (lower critical) has asserted.	Yes
80010902-0701ffff	Sensor [NumericSensorElementName] has detected high voltage.	Yes
8007021b-0301ffff	Sensor CPU 1 QPILinkErr has transitioned to critical from a less severe state.	Yes
8007021b-0302ffff	Sensor CPU 2 QPILinkErr has transitioned to critical from a less severe state.	Yes
806f0021-22010900	Fault in slot [PhysicalConnectorSystemElementName] on system [ComputerSystemElementName].	Yes
806f0021-22010901	Fault in slot [PhysicalConnectorSystemElementName] on system [ComputerSystemElementName].	Yes
806f0021-22010902	Fault in slot [PhysicalConnectorSystemElementName] on system [ComputerSystemElementName].	Yes
806f0021-22010903	Fault in slot [PhysicalConnectorSystemElementName] on system [ComputerSystemElementName].	Yes
806f0021-22010904	Fault in slot [PhysicalConnectorSystemElementName] on system [ComputerSystemElementName].	Yes
806f0021-25820900	Fault in slot [PhysicalConnectorSystemElementName] on system [ComputerSystemElementName].	Yes
806f0021-25820901	Fault in slot [PhysicalConnectorSystemElementName] on system [ComputerSystemElementName].	Yes
806f0021-25820902	Fault in slot [PhysicalConnectorSystemElementName] on system [ComputerSystemElementName].	Yes

Table 10. Events that automatically notify Support (continued)

Event ID	Message String	Automatically Notify Support
806f0021-25820903	Fault in slot [PhysicalConnectorSystemElementName] on system [ComputerSystemElementName].	Yes
806f0021-2582ffff	Fault in slot [PhysicalConnectorSystemElementName] on system [ComputerSystemElementName].	Yes
806f010c-2001ffff	Uncorrectable error detected for DIMM 1 on Subsystem [MemoryElementName].	Yes
806f010c-2002ffff	Uncorrectable error detected for DIMM 2 on Subsystem [MemoryElementName].	Yes
806f010c-2003ffff	Uncorrectable error detected for DIMM 3 on Subsystem [MemoryElementName].	Yes
806f010c-2004ffff	Uncorrectable error detected for DIMM 4 on Subsystem [MemoryElementName].	Yes
806f010c-2005ffff	Uncorrectable error detected for DIMM 5 on Subsystem [MemoryElementName].	Yes
806f010c-2006ffff	Uncorrectable error detected for DIMM 6 on Subsystem [MemoryElementName].	Yes
806f010c-2007ffff	Uncorrectable error detected for DIMM 7 on Subsystem [MemoryElementName].	Yes
806f010c-2008ffff	Uncorrectable error detected for DIMM 8 on Subsystem [MemoryElementName].	Yes
806f010c-2009ffff	Uncorrectable error detected for DIMM 9 on Subsystem [MemoryElementName].	Yes
806f010c-200affff	Uncorrectable error detected for DIMM 10 on Subsystem [MemoryElementName].	Yes
806f010c-200bffff	Uncorrectable error detected for DIMM 11 on Subsystem [MemoryElementName].	Yes
806f010c-200cffff	Uncorrectable error detected for DIMM 12 on Subsystem [MemoryElementName].	Yes
806f010c-200dffff	Uncorrectable error detected for DIMM 13 on Subsystem [MemoryElementName].	Yes
806f010c-200effff	Uncorrectable error detected for DIMM 14 on Subsystem [MemoryElementName].	Yes
806f010c-200fffff	Uncorrectable error detected for DIMM 15 on Subsystem [MemoryElementName].	Yes
806f010c-2010ffff	Uncorrectable error detected for DIMM 16 on Subsystem [MemoryElementName].	Yes
806f010c-2011ffff	Uncorrectable error detected for DIMM 17 on Subsystem [MemoryElementName].	Yes
806f010c-2012ffff	Uncorrectable error detected for DIMM 18 on Subsystem [MemoryElementName].	Yes
806f010c-2013ffff	Uncorrectable error detected for DIMM 19 on Subsystem [MemoryElementName].	Yes
806f010c-2014ffff	Uncorrectable error detected for DIMM 20 on Subsystem [MemoryElementName].	Yes

Table 10. Events that automatically notify Support (continued)

Event ID	Message String	Automatically Notify Support
806f010c-2015ffff	Uncorrectable error detected for DIMM 21 on Subsystem [MemoryElementName].	Yes
806f010c-2016ffff	Uncorrectable error detected for DIMM 22 on Subsystem [MemoryElementName].	Yes
806f010c-2017ffff	Uncorrectable error detected for DIMM 23 on Subsystem [MemoryElementName].	Yes
806f010c-2018ffff	Uncorrectable error detected for DIMM 24 on Subsystem [MemoryElementName].	Yes
806f010c-2581ffff	Uncorrectable error detected for [PhysicalMemoryElementName] on Subsystem [MemoryElementName].	Yes
806f010d-0400ffff	The Drive Drive 0 has been disabled due to a detected fault.	Yes
806f010d-04013ffff	The SEN Drive 12 has been disabled due to a detected fault.	Yes
806f010d-0401ffff	The Drive Drive 1 has been disabled due to a detected fault.	Yes
806f010d-0402ffff	The Drive Drive 2 has been disabled due to a detected fault.	Yes
806f010d-0403ffff	The Drive Drive 3 has been disabled due to a detected fault.	Yes
806f010d-0404ffff	The Drive Drive 4 has been disabled due to a detected fault.	Yes
806f010d-0405ffff	The Drive Drive 5 has been disabled due to a detected fault.	Yes
806f010d-0406ffff	The Drive Drive 6 has been disabled due to a detected fault.	Yes
806f010d-0407ffff	The Drive Drive 7 has been disabled due to a detected fault.	Yes
806f010d-0408ffff	The SEN Drive 1 has been disabled due to a detected fault.	Yes
806f010d-0409ffff	The SEN Drive 2 has been disabled due to a detected fault.	Yes
806f010d-040affff	The SEN Drive 3 has been disabled due to a detected fault.	Yes
806f010d-040bffff	The SEN Drive 4 has been disabled due to a detected fault.	Yes
806f010d-040cffff	The SEN Drive 5 has been disabled due to a detected fault.	Yes
806f010d-040dffff	The SEN Drive 6 has been disabled due to a detected fault.	Yes
806f010d-040effff	The SEN Drive 7 has been disabled due to a detected fault.	Yes
806f010d-040fffff	The SEN Drive 8 has been disabled due to a detected fault.	Yes

Table 10. Events that automatically notify Support (continued)

Event ID	Message String	Automatically Notify Support
806f010d-0410ffff	The SEN Drive 9 has been disabled due to a detected fault.	Yes
806f010d-0411ffff	The SEN Drive 10 has been disabled due to a detected fault.	Yes
806f010d-0412ffff	The SEN Drive 11 has been disabled due to a detected fault.	Yes
806f011b-0c01ffff	The connector LightPath has encountered a configuration error.	Yes
806f020d-0400ffff	Failure Predicted on drive Drive 0 for array [ComputerSystemElementName].	Yes
806f020d-0401ffff	Failure Predicted on drive Drive 1 for array [ComputerSystemElementName].	Yes
806f020d-0402ffff	Failure Predicted on drive Drive 2 for array [ComputerSystemElementName].	Yes
806f020d-0403ffff	Failure Predicted on drive Drive 3 for array [ComputerSystemElementName].	Yes
806f020d-0404ffff	Failure Predicted on drive Drive 4 for array [ComputerSystemElementName].	Yes
806f020d-0405ffff	Failure Predicted on drive Drive 5 for array [ComputerSystemElementName].	Yes
806f020d-0406ffff	Failure Predicted on drive Drive 6 for array [ComputerSystemElementName].	Yes
806f020d-0407ffff	Failure Predicted on drive Drive 7 for array [ComputerSystemElementName].	Yes
806f050c-2001ffff	Memory Logging Limit Reached for DIMM 1 on Subsystem [MemoryElementName].	Yes
806f050c-2002ffff	Memory Logging Limit Reached for DIMM 2 on Subsystem [MemoryElementName].	Yes
806f050c-2003ffff	Memory Logging Limit Reached for DIMM 3 on Subsystem [MemoryElementName].	Yes
806f050c-2004ffff	Memory Logging Limit Reached for DIMM 4 on Subsystem [MemoryElementName].	Yes
806f050c-2005ffff	Memory Logging Limit Reached for DIMM 5 on Subsystem [MemoryElementName].	Yes
806f050c-2006ffff	Memory Logging Limit Reached for DIMM 6 on Subsystem [MemoryElementName].	Yes
806f050c-2007ffff	Memory Logging Limit Reached for DIMM 7 on Subsystem [MemoryElementName].	Yes
806f050c-2008ffff	Memory Logging Limit Reached for DIMM 8 on Subsystem [MemoryElementName].	Yes
806f050c-2009ffff	Memory Logging Limit Reached for DIMM 9 on Subsystem [MemoryElementName].	Yes
806f050c-200affff	Memory Logging Limit Reached for DIMM 10 on Subsystem [MemoryElementName].	Yes
806f050c-200bffff	Memory Logging Limit Reached for DIMM 11 on Subsystem [MemoryElementName].	Yes

Table 10. Events that automatically notify Support (continued)

Event ID	Message String	Automatically Notify Support
806f050c-200cffff	Memory Logging Limit Reached for DIMM 12 on Subsystem [MemoryElementName].	Yes
806f050c-200dffff	Memory Logging Limit Reached for DIMM 13 on Subsystem [MemoryElementName].	Yes
806f050c-200effff	Memory Logging Limit Reached for DIMM 14 on Subsystem [MemoryElementName].	Yes
806f050c-200fffff	Memory Logging Limit Reached for DIMM 15 on Subsystem [MemoryElementName].	Yes
806f050c-2010ffff	Memory Logging Limit Reached for DIMM 16 on Subsystem [MemoryElementName].	Yes
806f050c-2011ffff	Memory Logging Limit Reached for DIMM 17 on Subsystem [MemoryElementName].	Yes
806f050c-2012ffff	Memory Logging Limit Reached for DIMM 18 on Subsystem [MemoryElementName].	Yes
806f050c-2013ffff	Memory Logging Limit Reached for DIMM 19 on Subsystem [MemoryElementName].	Yes
806f050c-2014ffff	Memory Logging Limit Reached for DIMM 20 on Subsystem [MemoryElementName].	Yes
806f050c-2015ffff	Memory Logging Limit Reached for DIMM 21 on Subsystem [MemoryElementName].	Yes
806f050c-2016ffff	Memory Logging Limit Reached for DIMM 22 on Subsystem [MemoryElementName].	Yes
806f050c-2017ffff	Memory Logging Limit Reached for DIMM 23 on Subsystem [MemoryElementName].	Yes
806f050c-2018ffff	Memory Logging Limit Reached for DIMM 24 on Subsystem [MemoryElementName].	Yes
806f050c-2581ffff	Memory Logging Limit Reached for [PhysicalMemoryElementName] on Subsystem [MemoryElementName].	Yes
806f060d-0400ffff	Array [ComputerSystemElementName] has failed.	Yes
806f060d-0401ffff	Array [ComputerSystemElementName] has failed.	Yes
806f060d-0402ffff	Array [ComputerSystemElementName] has failed.	Yes
806f060d-0403ffff	Array [ComputerSystemElementName] has failed.	Yes
806f060d-0404ffff	Array [ComputerSystemElementName] has failed.	Yes
806f060d-0405ffff	Array [ComputerSystemElementName] has failed.	Yes
806f060d-0406ffff	Array [ComputerSystemElementName] has failed.	Yes
806f060d-0407ffff	Array [ComputerSystemElementName] has failed.	Yes

Table 10. Events that automatically notify Support (continued)

Event ID	Message String	Automatically Notify Support
806f0813-2581ffff	A Uncorrectable Bus Error has occurred on system [ComputerSystemElementName].	Yes
806f0813-2584ffff	A Uncorrectable Bus Error has occurred on system [ComputerSystemElementName].	Yes

---

40000001-00000000 Management Controller [arg1] Network Initialization Complete.

Explanation: The IMM network subsystem initialization has completed.

May also be shown as 4000000100000000 or 0x4000000100000000

Severity: Info

Alert Category: System - IMM Network event

Serviceable: No

CIM Information: Prefix: IMM and **ID:** 0001

SNMP Trap ID: 37

Automatically notify Support: No

User response: Information only; no action is required.

40000002-00000000 Certificate Authority [arg1] has detected a [arg2] Certificate Error.

Explanation: A problem has occurred with the SSL Server, SSL Client, or SSL Trusted CA certificate that has been imported into the IMM. The imported certificate must contain a public key that corresponds to the key pair that was previously generated by the **Generate a New Key and Certificate Signing Request** link.

May also be shown as 4000000200000000 or 0x4000000200000000

Severity: Error

Alert Category: System - other

Serviceable: No

CIM Information: Prefix: IMM and **ID:** 0002

SNMP Trap ID: 22

Automatically notify Support: No

User response: Make sure that the certificate that you are importing is correct and properly generated.

40000003-00000000 Ethernet Data Rate modified from [arg1] to [arg2] by user [arg3].

Explanation: The specified user has changed the Ethernet data rate of the Integrated Management Module external network interface to the specified value.

May also be shown as 4000000300000000 or 0x4000000300000000

Severity: Info

Alert Category: none

Serviceable: No

CIM Information: Prefix: IMM and **ID:** 0003

SNMP Trap ID:

Automatically notify Support: No

User response: Information only; no action is required.

40000004-00000000 Ethernet Duplex setting modified from [arg1] to [arg2] by user [arg3].

Explanation: The specified user has changed the Ethernet duplex setting of the Integrated Management Module external network interface to the specified value.

May also be shown as 4000000400000000 or 0x4000000400000000

Severity: Info

Alert Category: none

Serviceable: No

CIM Information: Prefix: IMM and **ID:** 0004

SNMP Trap ID:

Automatically notify Support: No

User response: Information only; no action is required.

40000005-00000000 Ethernet MTU setting modified from [arg1] to [arg2] by user [arg3].

Explanation: The specified user has changed the Ethernet maximum transmission unit (MTU) setting of the Integrated Management Module external network interface to the specified value.

May also be shown as 4000000500000000 or 0x4000000500000000

Severity: Info

Alert Category: none

Serviceable: No

CIM Information: Prefix: IMM and **ID:** 0005

SNMP Trap ID:

Automatically notify Support: No

User response: Information only; no action is required.

40000006-00000000 Ethernet locally administered MAC address modified from [arg1] to [arg2] by user [arg3].

Explanation: The specified user has changed the Ethernet locally administered MAC address of the Integrated Management Module external network interface to the specified value

May also be shown as 4000000600000000 or 0x4000000600000000

Severity: Info

Alert Category: none

Serviceable: No

CIM Information: Prefix: IMM and **ID:** 0006

SNMP Trap ID:

Automatically notify Support: No

User response: Information only; no action is required.

40000007-00000000 Ethernet interface [arg1] by user [arg2].

Explanation: The specified user has enabled or disabled the Ethernet interface.

May also be shown as 4000000700000000 or 0x4000000700000000

Severity: Info

Alert Category: none

Serviceable: No

CIM Information: **Prefix:** IMM and **ID:** 0007

SNMP Trap ID:

Automatically notify Support: No

User response: Information only; no action is required.

40000008-00000000 Hostname set to [arg1] by user [arg2].

Explanation: The specified user has changed the Integrated Management Module host name.

May also be shown as 4000000800000000 or 0x4000000800000000

Severity: Info

Alert Category: System - IMM Network event

Serviceable: No

CIM Information: **Prefix:** IMM and **ID:** 0008

SNMP Trap ID: 37

Automatically notify Support: No

User response: Information only; no action is required.

40000009-00000000 IP address of network interface modified from [arg1] to [arg2] by user [arg3].

Explanation: The specified user has changed the IP address of the Integrated Management Module external network interface to the specified value.

May also be shown as 4000000900000000 or 0x4000000900000000

Severity: Info

Alert Category: System - IMM Network event

Serviceable: No

CIM Information: **Prefix:** IMM and **ID:** 0009

SNMP Trap ID: 37

Automatically notify Support: No

User response: Information only; no action is required.

4000000a-00000000 IP subnet mask of network interface modified from [arg1] to [arg2] by user [arg3].

Explanation: The specified user has changed the subnet mask of the Integrated Management Module external network interface to the specified value.

May also be shown as 4000000a00000000 or 0x4000000a00000000

Severity: Info

Alert Category: none

Serviceable: No

CIM Information: **Prefix:** IMM and **ID:** 0010

SNMP Trap ID:

Automatically notify Support: No

User response: Information only; no action is required.

4000000b-00000000 IP address of default gateway modified from [arg1] to [arg2] by user [arg3].

Explanation: The specified user has changed the gateway address of the Integrated Management Module external network interface to the specified value.

May also be shown as 4000000b00000000 or 0x4000000b00000000

Severity: Info

Alert Category: none

Serviceable: No

CIM Information: Prefix: IMM and **ID:** 0011

SNMP Trap ID:

Automatically notify Support: No

User response: Information only; no action is required.

4000000c-00000000 OS Watchdog response [arg1] by [arg2] .

Explanation: The OS Watchdog timer has been enabled of disabled by a user.

May also be shown as 4000000c00000000 or 0x4000000c00000000

Severity: Info

Alert Category: none

Serviceable: No

CIM Information: Prefix: IMM and **ID:** 0012

SNMP Trap ID:

Automatically notify Support: No

User response: Information only; no action is required.

4000000d-00000000 DHCP[[arg1]] failure, no IP address assigned.

Explanation: A DHCP server has failed to assign an IP address to the IMM.

May also be shown as 4000000d00000000 or 0x4000000d00000000

Severity: Warning

Alert Category: none

Serviceable: No

CIM Information: Prefix: IMM and **ID:** 0013

SNMP Trap ID:

Automatically notify Support: No

User response: Complete the following steps until the problem is solved:

1. Make sure that the IMM network cable is connected.
2. Make sure that there is a DHCP server on the network that can assign an IP address to the IMM.

4000000e-00000000 Remote Login Successful. Login ID: [arg1] from [arg2] at IP address [arg3].

Explanation: The specified user has logged in to the Integrated Management Module.

May also be shown as 4000000e00000000 or 0x4000000e00000000

Severity: Info

Alert Category: System - Remote Login

Serviceable: No

CIM Information: Prefix: IMM and **ID:** 0014

SNMP Trap ID: 30

Automatically notify Support: No

User response: Information only; no action is required.

4000000f-00000000 Attempting to [arg1] server [arg2] by user [arg3].

Explanation: The specified user has initiated a power function on the system using the Management Controller.

May also be shown as 4000000f00000000 or 0x4000000f00000000

Severity: Info

Alert Category: none

Serviceable: No

CIM Information: Prefix: IMM and **ID:** 0015

SNMP Trap ID:

Automatically notify Support: No

User response: Information only; no action is required.

40000010-00000000 Security: Userid: [arg1] had [arg2] login failures from WEB client at IP address [arg3].

Explanation: A user has exceeded the maximum allowed number of unsuccessful login attempts from a web browser and has been prevented from logging in for the lockout period.

May also be shown as 4000001000000000 or 0x4000001000000000

Severity: Warning

Alert Category: System - Remote Login

Serviceable: No

CIM Information: Prefix: IMM and **ID:** 0016

SNMP Trap ID: 30

Automatically notify Support: No

User response: Complete the following steps until the problem is solved:

1. Make sure that the correct login ID and password are being used.
2. Have the system administrator reset the login ID or password.

40000011-00000000 Security: Login ID: [arg1] had [arg2] login failures from CLI at [arg3].

Explanation: A user has exceeded the maximum allowed number of unsuccessful login attempts from the command-line interface and has been prevented from logging in for the lockout period.

May also be shown as 4000001100000000 or 0x4000001100000000

Severity: Warning

Alert Category: System - Remote Login

Serviceable: No

CIM Information: Prefix: IMM and **ID:** 0017

SNMP Trap ID: 30

Automatically notify Support: No

User response: Complete the following steps until the problem is solved:

1. Make sure that the correct login ID and password are being used.
2. Have the system administrator reset the login ID or password.

40000012-00000000 Remote access attempt failed. Invalid userid or password received. Userid is [arg1] from WEB browser at IP address [arg2].

Explanation: A user has attempted to log in from a web browser by using an invalid login ID or password.

May also be shown as 4000001200000000 or 0x4000001200000000

Severity: Info

Alert Category: System - Remote Login

Serviceable: No

CIM Information: Prefix: IMM and **ID:** 0018

SNMP Trap ID: 30

Automatically notify Support: No

User response: Make sure that the correct login ID and password are being used.

40000013-00000000 Remote access attempt failed. Invalid userid or password received. Userid is [arg1] from TELNET client at IP address [arg2].

Explanation: A user has attempted to log in from a Telnet session by using an invalid login ID or password.

May also be shown as 4000001300000000 or 0x4000001300000000

Severity: Info

Alert Category: System - Remote Login

Serviceable: No

CIM Information: Prefix: IMM and **ID:** 0019

SNMP Trap ID: 30

Automatically notify Support: No

User response: Make sure that the correct login ID and password are being used.

40000014-00000000 The [arg1] on system [arg2] cleared by user [arg3].

Explanation: The specified user has deleted system log events or audit log events.

May also be shown as 4000001400000000 or 0x4000001400000000

Severity: Info

Alert Category: none

Serviceable: No

CIM Information: Prefix: IMM and **ID:** 0020

SNMP Trap ID:

Automatically notify Support: No

User response: Information only; no action is required.

40000015-00000000 Management Controller [arg1] reset was initiated by user [arg2].

Explanation: The Integrated Management Module has been reset. The logs provide additional details.

May also be shown as 4000001500000000 or 0x4000001500000000

Severity: Info

Alert Category: none

Serviceable: No

CIM Information: **Prefix:** IMM and **ID:** 0021

SNMP Trap ID:

Automatically notify Support: No

User response: Information only; no action is required.

40000016-00000000 ENET[[arg1]] DHCP-HSTN=[arg2], DN=[arg3], IP@=[arg4], SN=[arg5], GW@=[arg6], DNS1@=[arg7] .

Explanation: The DHCP server has assigned an IMM IP address and configuration.

May also be shown as 4000001600000000 or 0x4000001600000000

Severity: Info

Alert Category: none

Serviceable: No

CIM Information: **Prefix:** IMM and **ID:** 0022

SNMP Trap ID:

Automatically notify Support: No

User response: Information only; no action is required.

40000017-00000000 ENET[[arg1]] IP-Cfg:HstName=[arg2], IP@=[arg3] ,NetMsk=[arg4], GW@=[arg5] .

Explanation: An IMM IP address and configuration have been assigned using client data.

May also be shown as 4000001700000000 or 0x4000001700000000

Severity: Info

Alert Category: none

Serviceable: No

CIM Information: **Prefix:** IMM and **ID:** 0023

SNMP Trap ID:

Automatically notify Support: No

User response: Information only; no action is required.

40000018-00000000 LAN: Ethernet[[arg1]] interface is no longer active.

Explanation: The IMM Ethernet interface has been disabled.

May also be shown as 4000001800000000 or 0x4000001800000000

Severity: Info

Alert Category: none

Serviceable: No

CIM Information: **Prefix:** IMM and **ID:** 0024

SNMP Trap ID:

Automatically notify Support: No

User response: Information only; no action is required.

40000019-00000000 LAN: Ethernet[[arg1]] interface is now active.

Explanation: The IMM Ethernet interface has been enabled.

May also be shown as 4000001900000000 or 0x4000001900000000

Severity: Info

Alert Category: none

Serviceable: No

CIM Information: Prefix: IMM and **ID:** 0025

SNMP Trap ID:

Automatically notify Support: No

User response: Information only; no action is required.

4000001a-00000000 DHCP setting changed to [arg1] by user [arg2].

Explanation: The specified user has changed the DHCP setting of the Integrated Management Module external network interface.

May also be shown as 4000001a00000000 or 0x4000001a00000000

Severity: Info

Alert Category: none

Serviceable: No

CIM Information: Prefix: IMM and **ID:** 0026

SNMP Trap ID:

Automatically notify Support: No

User response: Information only; no action is required.

4000001b-00000000 Management Controller [arg1]: Configuration restored from a file by user [arg2].

Explanation: The specified user has restored the Integrated Management Module (IMM) configuration from a previously saved configuration file. Some configuration settings might require that the IMM be restarted before they take effect.

May also be shown as 4000001b00000000 or 0x4000001b00000000

Severity: Info

Alert Category: none

Serviceable: No

CIM Information: Prefix: IMM and **ID:** 0027

SNMP Trap ID:

Automatically notify Support: No

User response: Information only; no action is required.

4000001c-00000000 Watchdog [arg1] Screen Capture Occurred.

Explanation: An operating-system error has occurred, and the screen capture was successful.

May also be shown as 4000001c00000000 or 0x4000001c00000000

Severity: Info

Alert Category: System - other

Serviceable: No

CIM Information: **Prefix:** IMM and **ID:** 0028

SNMP Trap ID: 22

Automatically notify Support: No

User response: If there was no operating-system error, complete the following steps until the problem is solved:

1. Reconfigure the watchdog timer to a higher value.
2. Make sure that the IMM Ethernet-over-USB interface is enabled.
3. Reinstall the RNDIS or cdc_ether device driver for the operating system.
4. Disable the watchdog.

If there was an operating-system error, check the integrity of the installed operating system.

Related Links:

- "Installing the LAN over USB Linux device driver" on page 51
- "Installing the LAN over USB Windows device driver" on page 49

4000001d-00000000 Watchdog [arg1] Failed to Capture Screen.

Explanation: An operating-system error has occurred, and the screen capture failed.

May also be shown as 4000001d00000000 or 0x4000001d00000000

Severity: Error

Alert Category: System - other

Serviceable: No

CIM Information: **Prefix:** IMM and **ID:** 0029

SNMP Trap ID: 22

Automatically notify Support: No

User response: Complete the following steps until the problem is solved:

1. Reconfigure the watchdog timer to a higher value.
2. Make sure that the IMM Ethernet over USB interface is enabled.
3. Reinstall the RNDIS or cdc_ether device driver for the operating system.
4. Disable the watchdog.
5. Check the integrity of the installed operating system.
6. Update the IMM firmware. **Important:** Some cluster solutions require specific code levels or coordinated code updates. If the device is part of a cluster solution, verify that the latest level of code is supported for the cluster solution before you update the code.

Related Links:

- "Installing the LAN over USB Linux device driver" on page 51
- "Installing the LAN over USB Windows device driver" on page 49

4000001e-00000000 Running the backup Management Controller [arg1] main application.

Explanation: The IMM was unable to run the primary IMM image and has resorted to running the backup image.

May also be shown as 4000001e00000000 or 0x4000001e00000000

Severity: Warning

Alert Category: System - other

Serviceable: No

CIM Information: **Prefix:** IMM and **ID:** 0030

SNMP Trap ID: 22

Automatically notify Support: No

User response: Update the IMM firmware. **Important:** Some cluster solutions require specific code levels or coordinated code updates. If the device is part of a cluster solution, verify that the latest level of code is supported for the cluster solution before you update the code.

Related Links:

- "Updating firmware and device drivers" on page 21
- IBM Flex System and IBM PureFlex Firmware Updates Best Practices

---

4000001f-00000000 Please ensure that the Management Controller [arg1] is flashed with the correct firmware. The Management Controller is unable to match its firmware to the server.

Explanation: The server does not support the installed IMM firmware version.

May also be shown as 4000001f00000000 or 0x4000001f00000000

Severity: Error

Alert Category: System - other

Serviceable: No

CIM Information: Prefix: IMM and **ID:** 0031

SNMP Trap ID: 22

Automatically notify Support: No

User response: Update the IMM firmware to a version that the server supports. **Important:** Some cluster solutions require specific code levels or coordinated code updates. If the device is part of a cluster solution, verify that the latest level of code is supported for the cluster solution before you update the code.

Related Links:

- "Updating firmware and device drivers" on page 21
- IBM Flex System and IBM PureFlex Firmware Updates Best Practices

---

40000020-00000000 Management Controller [arg1] Reset was caused by restoring default values.

Explanation: The default configuration has been restored to the Integrated Management Module.

May also be shown as 4000002000000000 or 0x4000002000000000

Severity: Info

Alert Category: none

Serviceable: No

CIM Information: Prefix: IMM and **ID:** 0032

SNMP Trap ID:

Automatically notify Support: No

User response: Information only; no action is required.

40000021-00000000 Management Controller [arg1] clock has been set from NTP server [arg2].

Explanation: The IMM clock has been set to the date and time that are provided by the Network Time Protocol server.

May also be shown as 4000002100000000 or 0x4000002100000000

Severity: Info

Alert Category: none

Serviceable: No

CIM Information: Prefix: IMM and **ID:** 0033

SNMP Trap ID:

Automatically notify Support: No

User response: Information only; no action is required.

40000022-00000000 SSL data in the Management Controller [arg1] configuration data is invalid. Clearing configuration data region and disabling SSL.

Explanation: There is a problem with the certificate that has been imported into the IMM. The imported certificate must contain a public key that corresponds to the key pair that was previously generated through the "Generate a New Key and Certificate Signing Request " link.

May also be shown as 4000002200000000 or 0x4000002200000000

Severity: Error

Alert Category: System - other

Serviceable: No

CIM Information: Prefix: IMM and **ID:** 0034

SNMP Trap ID: 22

Automatically notify Support: No

User response: Complete the following steps until the problem is solved:

1. Make sure that the certificate that you are importing is correct.
2. Try to import the certificate again.

40000023-00000000 Flash of [arg1] from [arg2] succeeded for user [arg3] .

Explanation: The specified firmware update has been completed.

May also be shown as 4000002300000000 or 0x4000002300000000

Severity: Info

Alert Category: none

Serviceable: No

CIM Information: Prefix: IMM and **ID:** 0035

SNMP Trap ID:

Automatically notify Support: No

User response: Information only; no action is required.

40000024-00000000 Flash of [arg1] from [arg2] failed for user [arg3].

Explanation: The specified firmware has not been updated.

May also be shown as 4000002400000000 or 0x4000002400000000

Severity: Info

Alert Category: System - other

Serviceable: No

CIM Information: Prefix: IMM and **ID:** 0036

SNMP Trap ID: 22

Automatically notify Support: No

User response: Information only; no action is required.

40000025-00000000 The [arg1] on system [arg2] is 75% full.

Explanation: The IMM event log is 75% full. When the event log is completely full, the new entries will overwrite the oldest entries. To avoid losing older log entries, save the log as a text file and clear the log.

May also be shown as 4000002500000000 or 0x4000002500000000

Severity: Info

Alert Category: System - Event Log Fullness

Serviceable: No

CIM Information: Prefix: IMM and **ID:** 0037

SNMP Trap ID: 35

Automatically notify Support: No

User response: Information only; no action is required.

40000026-00000000 The [arg1] on system [arg2] is 100% full.

Explanation: The IMM event log is full. New entries in the log will overwrite the oldest entries. To avoid losing older log entries, save the log as a text file and clear the log.

May also be shown as 4000002600000000 or 0x4000002600000000

Severity: Info

Alert Category: System - Event Log Fullness

Serviceable: No

CIM Information: Prefix: IMM and **ID:** 0038

SNMP Trap ID: 35

Automatically notify Support: No

User response: To avoid losing older log entries, save the log as a text file and clear the log.

40000027-00000000 Platform Watchdog Timer expired for [arg1].

Explanation: A "Platform Watchdog Timer Expired" event has occurred.

May also be shown as 4000002700000000 or 0x4000002700000000

Severity: Error

Alert Category: System - OS Timeout

Serviceable: No

CIM Information: Prefix: IMM and **ID:** 0039

SNMP Trap ID: 21

Automatically notify Support: No

User response: Complete the following steps until the problem is solved:

1. Reconfigure the watchdog timer to a higher value.
2. Make sure that the IMM Ethernet-over-USB interface is enabled.
3. Reinstall the RNDIS or cdc_ether device driver for the operating system.
4. Disable the watchdog.
5. Check the integrity of the installed operating system.

Related Links:

- "Installing the LAN over USB Linux device driver" on page 51
- "Installing the LAN over USB Windows device driver" on page 49

40000028-00000000 Management Controller Test Alert Generated by [arg1].

Explanation: The Integrated Management Module has sent a test message to help verify connectivity.

May also be shown as 4000002800000000 or 0x4000002800000000

Severity: Info

Alert Category: System - other

Serviceable: No

CIM Information: Prefix: IMM and **ID:** 0040

SNMP Trap ID: 22

Automatically notify Support: No

User response: Information only; no action is required.

40000029-00000000 Security: Userid: [arg1] had [arg2] login failures from an SSH client at IP address [arg3].

Explanation: A user has exceeded the maximum allowed number of unsuccessful login attempts from SSH and has been prevented from logging in for the lockout period.

May also be shown as 4000002900000000 or 0x4000002900000000

Severity: Info

Alert Category: System - Remote Login

Serviceable: No

CIM Information: Prefix: IMM and **ID:** 0041

SNMP Trap ID: 30

Automatically notify Support: No

User response: Complete the following steps until the problem is solved:

1. Make sure that the correct login ID and password are being used.
2. Have the system administrator reset the login ID or password.

4000002a-00000000 [arg1] firmware mismatch internal to system [arg2]. Please attempt to flash the [arg3] firmware.

Explanation: A specific type of firmware mismatch has been detected.

May also be shown as 4000002a00000000 or 0x4000002a00000000

Severity: Error

Alert Category: System - Other

Serviceable: No

CIM Information: Prefix: IMM and **ID:** 0042

SNMP Trap ID: 22

Automatically notify Support: No

User response: Update the IMM firmware to the latest version.

Related Links:

- "Updating firmware and device drivers" on page 21
- IBM Flex System and IBM PureFlex Firmware Updates Best Practices

---

4000002b-00000000 Domain name set to [arg1].

Explanation: Domain name set by user

May also be shown as 4000002b00000000 or 0x4000002b00000000

Severity: Info

Alert Category: none

Serviceable: No

CIM Information: Prefix: IMM and **ID:** 0043

SNMP Trap ID:

Automatically notify Support: No

User response: Information only; no action is required.

4000002c-00000000 Domain Source changed to [arg1] by user [arg2].

Explanation: Domain source changed by user

May also be shown as 4000002c00000000 or 0x4000002c00000000

Severity: Info

Alert Category: none

Serviceable: No

CIM Information: Prefix: IMM and **ID:** 0044

SNMP Trap ID:

Automatically notify Support: No

User response: Information only; no action is required.

4000002d-00000000 DDNS setting changed to [arg1] by user [arg2].

Explanation: DDNS setting changed by user

May also be shown as 4000002d00000000 or 0x4000002d00000000

Severity: Info

Alert Category: none

Serviceable: No

CIM Information: Prefix: IMM and **ID:** 0045

SNMP Trap ID:

Automatically notify Support: No

User response: Information only; no action is required.

4000002e-00000000 DDNS registration successful. The domain name is [arg1].

Explanation: The DDNS registration was successful.

May also be shown as 4000002e00000000 or 0x4000002e00000000

Severity: Info

Alert Category: none

Serviceable: No

CIM Information: Prefix: IMM and **ID:** 0046

SNMP Trap ID:

Automatically notify Support: No

User response: Information only; no action is required.

4000002f-00000000 IPv6 enabled by user [arg1] .

Explanation: The specified user has enabled IPv6 support on the Integrated Management Module.

May also be shown as 4000002f00000000 or 0x4000002f00000000

Severity: Info

Alert Category: none

Serviceable: No

CIM Information: Prefix: IMM and **ID:** 0047

SNMP Trap ID:

Automatically notify Support: No

User response: Information only; no action is required.

40000030-00000000 IPv6 disabled by user [arg1] .

Explanation: The specified user has disabled IPv6 support on the Integrated Management Module.

May also be shown as 4000003000000000 or 0x4000003000000000

Severity: Info

Alert Category: none

Serviceable: No

CIM Information: Prefix: IMM and **ID:** 0048

SNMP Trap ID:

Automatically notify Support: No

User response: Information only; no action is required.

40000031-00000000 IPv6 static IP configuration enabled by user [arg1].

Explanation: The specified user has enabled IPv6 static address assignment on the Integrated Management Module.

May also be shown as 4000003100000000 or 0x4000003100000000

Severity: Info

Alert Category: none

Serviceable: No

CIM Information: Prefix: IMM and **ID:** 0049

SNMP Trap ID:

Automatically notify Support: No

User response: Information only; no action is required.

40000032-00000000 IPv6 DHCP enabled by user [arg1].

Explanation: The specified user has enabled DHCPv6 on the Integrated Management Module.

May also be shown as 4000003200000000 or 0x4000003200000000

Severity: Info

Alert Category: none

Serviceable: No

CIM Information: **Prefix:** IMM and **ID:** 0050

SNMP Trap ID:

Automatically notify Support: No

User response: Information only; no action is required.

40000033-00000000 IPv6 stateless auto-configuration enabled by user [arg1].

Explanation: IPv6 stateless address auto-configuration has been enabled on the Integrated Management Module by the specified user.

May also be shown as 4000003300000000 or 0x4000003300000000

Severity: Info

Alert Category: none

Serviceable: No

CIM Information: **Prefix:** IMM and **ID:** 0051

SNMP Trap ID:

Automatically notify Support: No

User response: Information only; no action is required.

40000034-00000000 IPv6 static IP configuration disabled by user [arg1].

Explanation: The specified user has disabled IPv6 static address assignment on the Integrated Management Module.

May also be shown as 4000003400000000 or 0x4000003400000000

Severity: Info

Alert Category: none

Serviceable: No

CIM Information: **Prefix:** IMM and **ID:** 0052

SNMP Trap ID:

Automatically notify Support: No

User response: Information only; no action is required.

40000035-00000000 IPv6 DHCP disabled by user [arg1].

Explanation: The specified user has disabled DHCPv6 on the Integrated Management Module.

May also be shown as 4000003500000000 or 0x4000003500000000

Severity: Info

Alert Category: none

Serviceable: No

CIM Information: **Prefix:** IMM and **ID:** 0053

SNMP Trap ID:

Automatically notify Support: No

User response: Information only; no action is required.

40000036-00000000 IPv6 stateless auto-configuration disabled by user [arg1].

Explanation: IPv6 stateless address auto-configuration has been disabled on the Integrated Management Module by the specified user.

May also be shown as 4000003600000000 or 0x4000003600000000

Severity: Info

Alert Category: none

Serviceable: No

CIM Information: Prefix: IMM and **ID:** 0054

SNMP Trap ID:

Automatically notify Support: No

User response: Information only; no action is required.

40000037-00000000 ENET[[arg1]] IPv6-LinkLocal:HstName=[arg2], IP@=[arg3], Pref=[arg4] .

Explanation: The IPv6 link-local address is active.

May also be shown as 4000003700000000 or 0x4000003700000000

Severity: Info

Alert Category: none

Serviceable: No

CIM Information: Prefix: IMM and **ID:** 0055

SNMP Trap ID:

Automatically notify Support: No

User response: Information only; no action is required.

40000038-00000000 ENET[[arg1]] IPv6-Static:HstName=[arg2], IP@=[arg3], Pref=[arg4], GW@=[arg5].

Explanation: The IPv6 static address is active.

May also be shown as 4000003800000000 or 0x4000003800000000

Severity: Info

Alert Category: none

Serviceable: No

CIM Information: Prefix: IMM and **ID:** 0056

SNMP Trap ID:

Automatically notify Support: No

User response: Information only; no action is required.

40000039-00000000 ENET[[arg1]] DHCPv6-HSTN=[arg2], DN=[arg3], IP@=[arg4], Pref=[arg5].

Explanation: The IPv6 DHCP-assigned address is active.

May also be shown as 4000003900000000 or 0x4000003900000000

Severity: Info

Alert Category: none

Serviceable: No

CIM Information: Prefix: IMM and **ID:** 0057

SNMP Trap ID:

Automatically notify Support: No

User response: Information only; no action is required.

4000003a-00000000 IPv6 static address of network interface modified from [arg1] to [arg2] by user [arg3].

Explanation: A user modifies the IPv6 static address of a Management Controller

May also be shown as 4000003a00000000 or 0x4000003a00000000

Severity: Info

Alert Category: none

Serviceable: No

CIM Information: Prefix: IMM and **ID:** 0058

SNMP Trap ID:

Automatically notify Support: No

User response: Information only; no action is required.

4000003b-00000000 DHCPv6 failure, no IP address assigned.

Explanation: The DHCPv6 server has failed to assign an IP address to a management controller.

May also be shown as 4000003b00000000 or 0x4000003b00000000

Severity: Warning

Alert Category: none

Serviceable: No

CIM Information: Prefix: IMM and **ID:** 0059

SNMP Trap ID:

Automatically notify Support: No

User response: Complete the following steps until the problem is solved:

1. Make sure that the IMM network cable is connected.
2. Make sure that there is a DHCPv6 server on the network that can assign an IP address to the IMM.

4000003c-00000000 Platform Watchdog Timer expired for [arg1].

Explanation: IMM has detected an OS did not start in the expected amount of time.

May also be shown as 4000003c00000000 or 0x4000003c00000000

Severity: Error

Alert Category: System - Loader timeout

Serviceable: No

CIM Information: Prefix: IMM and **ID:** 0060

SNMP Trap ID: 26

Automatically notify Support: No

User response:

1. Reconfigure the watchdog timer to a higher value.
2. Make sure that the IMM Ethernet over USB interface is enabled.
3. Reinstall the RNDIS or cdc_ether device driver for the operating system.
4. Disable the watchdog.

5. Check the integrity of the installed operating system

Related Links:

- "Installing the LAN over USB Linux device driver" on page 51
- "Installing the LAN over USB Windows device driver" on page 49

4000003d-00000000 Telnet port number changed from [arg1] to [arg2] by user [arg3].

Explanation: The specified user has changed the Telnet port number.

May also be shown as 4000003d00000000 or 0x4000003d00000000

Severity: Info

Alert Category: none

Serviceable: No

CIM Information: Prefix: IMM and **ID:** 0061

SNMP Trap ID:

Automatically notify Support: No

User response: Information only; no action is required.

4000003e-00000000 SSH port number changed from [arg1] to [arg2] by user [arg3].

Explanation: The specified user has changed the Secure Shell (SSH) port number.

May also be shown as 4000003e00000000 or 0x4000003e00000000

Severity: Info

Alert Category: none

Serviceable: No

CIM Information: Prefix: IMM and **ID:** 0062

SNMP Trap ID:

Automatically notify Support: No

User response: Information only; no action is required.

4000003f-00000000 Web-HTTP port number changed from [arg1] to [arg2] by user [arg3].

Explanation: The specified user has changed the HTTP port number. New HTTP (web) connections must use the new port number.

May also be shown as 4000003f00000000 or 0x4000003f00000000

Severity: Info

Alert Category: none

Serviceable: No

CIM Information: Prefix: IMM and **ID:** 0063

SNMP Trap ID:

Automatically notify Support: No

User response: Information only; no action is required.

40000040-00000000 Web-HTTPS port number changed from [arg1] to [arg2] by user [arg3].

Explanation: The specified user has changed the HTTPS port number. New HTTPS (secure web) connections must use the new port number.

May also be shown as 4000004000000000 or 0x4000004000000000

Severity: Info

Alert Category: none

Serviceable: No

CIM Information: Prefix: IMM and **ID:** 0064

SNMP Trap ID:

Automatically notify Support: No

User response: Information only; no action is required.

40000041-00000000 CIM/XML HTTP port number changed from [arg1] to [arg2] by user [arg3].

Explanation: The specified user has changed the CIM HTTP port number.

May also be shown as 4000004100000000 or 0x4000004100000000

Severity: Info

Alert Category: none

Serviceable: No

CIM Information: Prefix: IMM and **ID:** 0065

SNMP Trap ID:

Automatically notify Support: No

User response: Information only; no action is required.

40000042-00000000 CIM/XML HTTPS port number changed from [arg1] to [arg2] by user [arg3].

Explanation: The specified user has changed the CIM HTTPS port number.

May also be shown as 4000004200000000 or 0x4000004200000000

Severity: Info

Alert Category: none

Serviceable: No

CIM Information: Prefix: IMM and **ID:** 0066

SNMP Trap ID:

Automatically notify Support: No

User response: Information only; no action is required.

40000043-00000000 SNMP Agent port number changed from [arg1] to [arg2] by user [arg3].

Explanation: The specified user has changed the Simple Network Management Protocol (SNMP) agent port number.

May also be shown as 4000004300000000 or 0x4000004300000000

Severity: Info

Alert Category: none

Serviceable: No

CIM Information: Prefix: IMM and **ID:** 0067

SNMP Trap ID:

Automatically notify Support: No

User response: Information only; no action is required.

40000044-00000000 SNMP Traps port number changed from [arg1] to [arg2] by user [arg3].

Explanation: The specified user has changed the Simple Network Management Protocol (SNMP) traps port number.

May also be shown as 4000004400000000 or 0x4000004400000000

Severity: Info

Alert Category: none

Serviceable: No

CIM Information: Prefix: IMM and **ID:** 0068

SNMP Trap ID:

Automatically notify Support: No

User response: Information only; no action is required.

40000045-00000000 Syslog port number changed from [arg1] to [arg2] by user [arg3].

Explanation: A user has modified the Syslog receiver port number

May also be shown as 4000004500000000 or 0x4000004500000000

Severity: Info

Alert Category: none

Serviceable: No

CIM Information: Prefix: IMM and **ID:** 0069

SNMP Trap ID:

Automatically notify Support: No

User response: Information only; no action is required.

40000046-00000000 Remote Presence port number changed from [arg1] to [arg2] by user [arg3].

Explanation: A user has modified the Remote Presence port number

May also be shown as 4000004600000000 or 0x4000004600000000

Severity: Info

Alert Category: none

Serviceable: No

CIM Information: Prefix: IMM and **ID:** 0070

SNMP Trap ID:

Automatically notify Support: No

User response: Information only; no action is required.

40000047-00000000 LED [arg1] state changed to [arg2] by [arg3].

Explanation: The specified LED has changed state.

May also be shown as 4000004700000000 or 0x4000004700000000

Severity: Info

Alert Category: none

Serviceable: No

CIM Information: **Prefix:** IMM and **ID:** 0071

SNMP Trap ID:

Automatically notify Support: No

User response: Information only; no action is required.

40000048-00000000 Inventory data changed for device [arg1], new device data hash=[arg2], new master data hash=[arg3] .

Explanation: Something has caused the physical inventory to change

May also be shown as 4000004800000000 or 0x4000004800000000

Severity: Info

Alert Category: none

Serviceable: No

CIM Information: **Prefix:** IMM and **ID:** 0072

SNMP Trap ID:

Automatically notify Support: No

User response: Information only; no action is required.

40000049-00000000 SNMP [arg1] enabled by user [arg2] .

Explanation: The specified user has enabled the SNMPv1 or SNMPv3 agent.

May also be shown as 4000004900000000 or 0x4000004900000000

Severity: Info

Alert Category: none

Serviceable: No

CIM Information: **Prefix:** IMM and **ID:** 0073

SNMP Trap ID:

Automatically notify Support: No

User response: Information only; no action is required.

4000004a-00000000 SNMP [arg1] disabled by user [arg2] .

Explanation: The specified user has disabled the SNMPv1 or SNMPv3 agent.

May also be shown as 4000004a00000000 or 0x4000004a00000000

Severity: Info

Alert Category: none

Serviceable: No

CIM Information: **Prefix:** IMM and **ID:** 0074

SNMP Trap ID:

Automatically notify Support: No

User response: Information only; no action is required.

4000004b-00000000 SNMPv1 [arg1] set by user [arg2]: Name=[arg3], AccessType=[arg4], Address=[arg5], .

Explanation: A user changed the SNMP community string

May also be shown as 4000004b00000000 or 0x4000004b00000000

Severity: Info

Alert Category: none

Serviceable: No

CIM Information: Prefix: IMM and **ID:** 0075

SNMP Trap ID:

Automatically notify Support: No

User response: Information only; no action is required.

4000004c-00000000 LDAP Server configuration set by user [arg1]: SelectionMethod=[arg2], DomainName=[arg3], Server1=[arg4], Server2=[arg5], Server3=[arg6], Server4=[arg7].

Explanation: A user changed the LDAP server configuration

May also be shown as 4000004c00000000 or 0x4000004c00000000

Severity: Info

Alert Category: none

Serviceable: No

CIM Information: Prefix: IMM and **ID:** 0076

SNMP Trap ID:

Automatically notify Support: No

User response: Information only; no action is required.

4000004d-00000000 LDAP set by user [arg1]: RootDN=[arg2], UIDSearchAttribute=[arg3], BindingMethod=[arg4], EnhancedRBS=[arg5], TargetName=[arg6], GroupFilter=[arg7], GroupAttribute=[arg8], LoginAttribute=[arg9].

Explanation: A user configured an LDAP Miscellaneous setting

May also be shown as 4000004d00000000 or 0x4000004d00000000

Severity: Info

Alert Category: none

Serviceable: No

CIM Information: Prefix: IMM and **ID:** 0077

SNMP Trap ID:

Automatically notify Support: No

User response: Information only; no action is required.

4000004e-00000000 Serial Redirection set by user [arg1]: Mode=[arg2], BaudRate=[arg3], StopBits=[arg4], Parity=[arg5], SessionTerminateSequence=[arg6].

Explanation: A user configured the Serial Port mode

May also be shown as 4000004e00000000 or 0x4000004e00000000

Severity: Info

Alert Category: none

Serviceable: No

CIM Information: Prefix: IMM and **ID:** 0078

SNMP Trap ID:

Automatically notify Support: No

User response: Information only; no action is required.

4000004f-00000000 Date and Time set by user [arg1]: Date=[arg2], Time-[arg3], DST Auto-adjust=[arg4], Timezone=[arg5].

Explanation: The specified user has changed the date and time in the Integrated Management Module.

May also be shown as 4000004f00000000 or 0x4000004f00000000

Severity: Info

Alert Category: none

Serviceable: No

CIM Information: Prefix: IMM and **ID:** 0079

SNMP Trap ID:

Automatically notify Support: No

User response: Information only; no action is required.

40000050-00000000 Server General Settings set by user [arg1]: Name=[arg2], Contact=[arg3], Location=[arg4], Room=[arg5], RackID=[arg6], Rack U-position=[arg7].

Explanation: A user configured the Location setting

May also be shown as 4000005000000000 or 0x4000005000000000

Severity: Info

Alert Category: none

Serviceable: No

CIM Information: Prefix: IMM and **ID:** 0080

SNMP Trap ID:

Automatically notify Support: No

User response: Information only; no action is required.

40000051-00000000 Server Power Off Delay set to [arg1] by user [arg2].

Explanation: A user configured the Server Power Off Delay

May also be shown as 4000005100000000 or 0x4000005100000000

Severity: Info

Alert Category: none

Serviceable: No

CIM Information: Prefix: IMM and **ID:** 0081

SNMP Trap ID:

Automatically notify Support: No

User response: Information only; no action is required.

40000052-00000000 Server [arg1] scheduled for [arg2] at [arg3] by user [arg4].

Explanation: A user configured a Server Power action at a specific time

May also be shown as 4000005200000000 or 0x4000005200000000

Severity: Info

Alert Category: none

Serviceable: No

CIM Information: Prefix: IMM and **ID:** 0082

SNMP Trap ID:

Automatically notify Support: No

User response: Information only; no action is required.

40000053-00000000 Server [arg1] scheduled for every [arg2] at [arg3] by user [arg4].

Explanation: A user configured a recurring Server Power Action

May also be shown as 4000005300000000 or 0x4000005300000000

Severity: Info

Alert Category: none

Serviceable: No

CIM Information: Prefix: IMM and **ID:** 0083

SNMP Trap ID:

Automatically notify Support: No

User response: Information only; no action is required.

40000054-00000000 Server [arg1] [arg2] cleared by user [arg3].

Explanation: A user cleared a Server Power Action.

May also be shown as 4000005400000000 or 0x4000005400000000

Severity: Info

Alert Category: none

Serviceable: No

CIM Information: Prefix: IMM and **ID:** 0084

SNMP Trap ID:

Automatically notify Support: No

User response: Information only; no action is required.

40000055-00000000 Synchronize time setting by user [arg1]: Mode=[arg2], NTPServerHost=[arg3]:[arg4],NTPUpdateFrequency=[arg5].

Explanation: A user configured the Date and Time synchronize settings

May also be shown as 4000005500000000 or 0x4000005500000000

Severity: Info

Alert Category: none

Serviceable: No

CIM Information: Prefix: IMM and **ID:** 0085

SNMP Trap ID:

Automatically notify Support: No

User response: Information only; no action is required.

40000056-00000000 SMTP Server set by user [arg1] to [arg2]:[arg3].

Explanation: A user configured the SMTP server

May also be shown as 4000005600000000 or 0x4000005600000000

Severity: Info

Alert Category: none

Serviceable: No

CIM Information: Prefix: IMM and **ID:** 0086

SNMP Trap ID:

Automatically notify Support: No

User response: Information only; no action is required.

40000057-00000000 Telnet [arg1] by user [arg2].

Explanation: The specified user has enabled or disabled Telnet.

May also be shown as 4000005700000000 or 0x4000005700000000

Severity: Info

Alert Category: none

Serviceable: No

CIM Information: Prefix: IMM and **ID:** 0087

SNMP Trap ID:

Automatically notify Support: No

User response: Information only; no action is required.

40000058-00000000 DNS servers set by user [arg1]: UseAdditionalServers=[arg2], PreferredDNStype=[arg3], IPv4Server1=[arg4], IPv4Server2=[arg5], IPv4Server3=[arg6], IPv6Server1=[arg7], IPv6Server2=[arg8], IPv6Server3=[arg9].

Explanation: The specified user has configured the DNS servers.

May also be shown as 4000005800000000 or 0x4000005800000000

Severity: Info

Alert Category: none

Serviceable: No

CIM Information: Prefix: IMM and **ID:** 0088

SNMP Trap ID:

Automatically notify Support: No

User response: Information only; no action is required.

40000059-00000000 LAN over USB [arg1] by user [arg2].

Explanation: A user configured USB-LAN

May also be shown as 4000005900000000 or 0x4000005900000000

Severity: Info

Alert Category: none

Serviceable: No

CIM Information: Prefix: IMM and **ID:** 0089

SNMP Trap ID:

Automatically notify Support: No

User response: Information only; no action is required.

4000005a-00000000 LAN over USB Port Forwarding set by user [arg1]: ExternalPort=[arg2], USB-LAN port=[arg3].

Explanation: A user configured USB-LAN port forwarding

May also be shown as 4000005a00000000 or 0x4000005a00000000

Severity: Info

Alert Category: none

Serviceable: No

CIM Information: Prefix: IMM and **ID:** 0090

SNMP Trap ID:

Automatically notify Support: No

User response: Information only; no action is required.

4000005b-00000000 Secure Web services (HTTPS) [arg1] by user [arg2].

Explanation: A user enables or disables Secure web services

May also be shown as 4000005b00000000 or 0x4000005b00000000

Severity: Info

Alert Category: none

Serviceable: No

CIM Information: Prefix: IMM and **ID:** 0091

SNMP Trap ID:

Automatically notify Support: No

User response: Information only; no action is required.

4000005c-00000000 Secure CIM/XML(HTTPS) [arg1] by user [arg2].

Explanation: The secure CIM-XML port has been enabled or disabled.

May also be shown as 4000005c00000000 or 0x4000005c00000000

Severity: Info

Alert Category: none

Serviceable: No

CIM Information: Prefix: IMM and **ID:** 0092

SNMP Trap ID:

Automatically notify Support: No

User response: Information only; no action is required.

4000005d-00000000 Secure LDAP [arg1] by user [arg2].

Explanation: A user enables or disables Secure LDAP services

May also be shown as 4000005d00000000 or 0x4000005d00000000

Severity: Info

Alert Category: none

Serviceable: No

CIM Information: Prefix: IMM and **ID:** 0093

SNMP Trap ID:

Automatically notify Support: No

User response: Information only; no action is required.

4000005e-00000000 SSH [arg1] by user [arg2].

Explanation: The specified user has enabled or disabled the Secure Shell (SSH) service.

May also be shown as 4000005e00000000 or 0x4000005e00000000

Severity: Info

Alert Category: none

Serviceable: No

CIM Information: Prefix: IMM and **ID:** 0094

SNMP Trap ID:

Automatically notify Support: No

User response: Information only; no action is required.

4000005f-00000000 Server timeouts set by user [arg1]: EnableOSWatchdog=[arg2], OSWatchdogTimout=[arg3], EnableLoaderWatchdog=[arg4], LoaderTimeout=[arg5].

Explanation: A user configures Server Timeouts

May also be shown as 4000005f00000000 or 0x4000005f00000000

Severity: Info

Alert Category: none

Serviceable: No

CIM Information: Prefix: IMM and **ID:** 0095

SNMP Trap ID:

Automatically notify Support: No

User response: Information only; no action is required.

40000060-00000000 License key for [arg1] added by user [arg2].

Explanation: A Integrated Management Module license that allows access to the specified feature was added to the system.

May also be shown as 4000006000000000 or 0x4000006000000000

Severity: Info

Alert Category: none

Serviceable: No

CIM Information: **Prefix:** IMM and **ID:** 0096

SNMP Trap ID:

Automatically notify Support: No

User response: Information only; no action is required.

40000061-00000000 License key for [arg1] removed by user [arg2].

Explanation: The specified user has removed an Integrated Management Module license. Access to the specified feature is no longer allowed.

May also be shown as 4000006100000000 or 0x4000006100000000

Severity: Info

Alert Category: none

Serviceable: No

CIM Information: **Prefix:** IMM and **ID:** 0097

SNMP Trap ID:

Automatically notify Support: No

User response: Information only; no action is required.

40000062-00000000 Global Login General Settings set by user [arg1]: AuthenticationMethod=[arg2], LockoutPeriod=[arg3], SessionTimeout=[arg4].

Explanation: A user changes the Global Login General Settings

May also be shown as 4000006200000000 or 0x4000006200000000

Severity: Info

Alert Category: none

Serviceable: No

CIM Information: **Prefix:** IMM and **ID:** 0098

SNMP Trap ID:

Automatically notify Support: No

User response: Information only; no action is required.

40000063-00000000 Global Login Account Security set by user [arg1]: PasswordRequired=[arg2], PasswordExpirationPeriod=[arg3], MinimumPasswordReuseCycle=[arg4], MinimumPasswordLength=[arg5], MinimumPasswordChangeInterval=[arg6], MaxmumLoginFailures=[arg7], LockoutAfterMaxFailures=[arg8], MinimumDifferentCharacters=[arg9], DefaultIDExpired=[arg10], ChangePasswordFirstAccess=[arg11].

Explanation: A user changes the Global Login Account Security Settings to Legacy

May also be shown as 4000006300000000 or 0x4000006300000000

Severity: Info

Alert Category: none

Serviceable: No

CIM Information: **Prefix:** IMM and **ID:** 0099

SNMP Trap ID:

Automatically notify Support: No

User response: Information only; no action is required.

40000064-00000000 User [arg1] created.

Explanation: A user account has been created.

May also be shown as 4000006400000000 or 0x4000006400000000

Severity: Info

Alert Category: none

Serviceable: No

CIM Information: **Prefix:** IMM and **ID:** 0100

SNMP Trap ID:

Automatically notify Support: No

User response: Information only; no action is required.

40000065-00000000 User [arg1] removed.

Explanation: A user account has been removed.

May also be shown as 4000006500000000 or 0x4000006500000000

Severity: Info

Alert Category: none

Serviceable: No

CIM Information: **Prefix:** IMM and **ID:** 0101

SNMP Trap ID:

Automatically notify Support: No

User response: Information only; no action is required.

40000066-00000000 User [arg1] password modified.

Explanation: The password for the specified user account has been changed.

May also be shown as 4000006600000000 or 0x4000006600000000

Severity: Info

Alert Category: none

Serviceable: No

CIM Information: **Prefix:** IMM and **ID:** 0102

SNMP Trap ID:

Automatically notify Support: No

User response: Information only; no action is required.

40000067-00000000 User [arg1] role set to [arg2].

Explanation: A user account role assigned

May also be shown as 4000006700000000 or 0x4000006700000000

Severity: Info

Alert Category: none

Serviceable: No

CIM Information: Prefix: IMM and **ID:** 0103

SNMP Trap ID:

Automatically notify Support: No

User response: Information only; no action is required.

40000068-00000000 User [arg1] custom privileges set: [arg2].

Explanation: User account priveleges assigned

May also be shown as 4000006800000000 or 0x4000006800000000

Severity: Info

Alert Category: none

Serviceable: No

CIM Information: Prefix: IMM and **ID:** 0104

SNMP Trap ID:

Automatically notify Support: No

User response: Information only; no action is required.

40000069-00000000 User [arg1] for SNMPv3 set: AuthenticationProtocol=[arg2], PrivacyProtocol=[arg3], AccessType=[arg4], HostforTraps=[arg5].

Explanation: User account SNMPv3 settings changed

May also be shown as 4000006900000000 or 0x4000006900000000

Severity: Info

Alert Category: none

Serviceable: No

CIM Information: Prefix: IMM and **ID:** 0105

SNMP Trap ID:

Automatically notify Support: No

User response: Information only; no action is required.

4000006a-00000000 SSH Client key added for user [arg1].

Explanation: User locally defined an SSH Client key

May also be shown as 4000006a00000000 or 0x4000006a00000000

Severity: Info

Alert Category: none

Serviceable: No

CIM Information: Prefix: IMM and **ID:** 0106

SNMP Trap ID:

Automatically notify Support: No

User response: Information only; no action is required.

4000006b-00000000 SSH Client key imported for user [arg1] from [arg2].

Explanation: User imported an SSH Client key

May also be shown as 4000006b00000000 or 0x4000006b00000000

Severity: Info

Alert Category: none

Serviceable: No

CIM Information: Prefix: IMM and **ID:** 0107

SNMP Trap ID:

Automatically notify Support: No

User response: Information only; no action is required.

4000006c-00000000 SSH Client key removed from user [arg1].

Explanation: User removed an SSH Client key

May also be shown as 4000006c00000000 or 0x4000006c00000000

Severity: Info

Alert Category: none

Serviceable: No

CIM Information: Prefix: IMM and **ID:** 0108

SNMP Trap ID:

Automatically notify Support: No

User response: Information only; no action is required.

4000006d-00000000 Management Controller [arg1]: Configuration saved to a file by user [arg2].

Explanation: A user saves a Management Controller configuration to a file.

May also be shown as 4000006d00000000 or 0x4000006d00000000

Severity: Info

Alert Category: none

Serviceable: No

CIM Information: Prefix: IMM and **ID:** 0109

SNMP Trap ID:

Automatically notify Support: No

User response: Information only; no action is required.

4000006e-00000000 Alert Configuration Global Event Notification set by user [arg1]: RetryLimit=[arg2], RetryInterval=[arg3], EntryInterval=[arg4].

Explanation: A user changes the Global Event Notification settings.

May also be shown as 4000006e00000000 or 0x4000006e00000000

Severity: Info

Alert Category: none

Serviceable: No

CIM Information: **Prefix:** IMM and **ID:** 0110

SNMP Trap ID:

Automatically notify Support: No

User response: Information only; no action is required.

4000006f-00000000 Alert Recipient Number [arg1] updated: Name=[arg2], DeliveryMethod=[arg3], Address=[arg4], IncludeLog=[arg5], Enabled=[arg6], EnabledAlerts=[arg7], AllowedFilters=[arg8].

Explanation: The specified user has changed or reset the remote alert recipient configuration.

May also be shown as 4000006f00000000 or 0x4000006f00000000

Severity: Info

Alert Category: none

Serviceable: No

CIM Information: **Prefix:** IMM and **ID:** 0111

SNMP Trap ID:

Automatically notify Support: No

User response: Information only; no action is required.

40000070-00000000 SNMP Traps enabled by user [arg1]: EnabledAlerts=[arg2], AllowedFilters=[arg3] .

Explanation: The specified user has enabled Simple Network Management Protocol (SNMP) traps.

May also be shown as 4000007000000000 or 0x4000007000000000

Severity: Info

Alert Category: none

Serviceable: No

CIM Information: **Prefix:** IMM and **ID:** 0112

SNMP Trap ID:

Automatically notify Support: No

User response: Information only; no action is required.

40000071-00000000 The power cap value changed from [arg1] watts to [arg2] watts by user [arg3].

Explanation: The power capping level has been changed.

May also be shown as 4000007100000000 or 0x4000007100000000

Severity: Info

Alert Category: none

Serviceable: No

CIM Information: **Prefix:** IMM and **ID:** 0113

SNMP Trap ID:

Automatically notify Support: No

User response: Information only; no action is required

40000072-00000000 The minimum power cap value changed from [arg1] watts to [arg2] watts.

Explanation: The minimum power cap value has been changed.

May also be shown as 4000007200000000 or 0x4000007200000000

Severity: Info

Alert Category: none

Serviceable: No

CIM Information: Prefix: IMM and **ID:** 0114

SNMP Trap ID:

Automatically notify Support: No

User response: Information only; no action is required.

40000073-00000000 The maximum power cap value changed from [arg1] watts to [arg2] watts.

Explanation: The maximum power cap value has been changed.

May also be shown as 4000007300000000 or 0x4000007300000000

Severity: Info

Alert Category: none

Serviceable: No

CIM Information: Prefix: IMM and **ID:** 0115

SNMP Trap ID:

Automatically notify Support: No

User response: Information only; no action is required.

40000074-00000000 The soft minimum power cap value changed from [arg1] watts to [arg2] watts.

Explanation: The soft minimum power cap value has been changed.

May also be shown as 4000007400000000 or 0x4000007400000000

Severity: Info

Alert Category: none

Serviceable: No

CIM Information: Prefix: IMM and **ID:** 0116

SNMP Trap ID:

Automatically notify Support: No

User response: Information only; no action is required.

40000075-00000000 The measured power value exceeded the power cap value.

Explanation: The measured power value has exceeded the power cap value.

May also be shown as 4000007500000000 or 0x4000007500000000

Severity: Warning

Alert Category: Warning - Power

Serviceable: No

CIM Information: Prefix: IMM and **ID:** 0117

SNMP Trap ID: 164

Automatically notify Support: No

User response:

- Make sure IMM firmware is at the latest level.
- Raise the system power cap value or adjust the system workload to be less than the currently applied power cap.

Related Links:

- "Updating firmware and device drivers" on page 21
- IBM Flex System and IBM PureFlex Firmware Updates Best Practices

---

40000076-00000000 The new minimum power cap value exceeded the power cap value.

Explanation: The new minimum power cap value has exceeded the power cap value.

May also be shown as 4000007600000000 or 0x4000007600000000

Severity: Warning

Alert Category: Warning - Power

Serviceable: No

CIM Information: Prefix: IMM and **ID:** 0118

SNMP Trap ID: 164

Automatically notify Support: No

User response: User may need to adjust the power cap value to be greater or equal to the minimum power cap.

40000077-00000000 Power capping was activated by user [arg1].

Explanation: The power capping control has been enabled.

May also be shown as 4000007700000000 or 0x4000007700000000

Severity: Info

Alert Category: none

Serviceable: No

CIM Information: Prefix: IMM and **ID:** 0119

SNMP Trap ID:

Automatically notify Support: No

User response: Information only; no action is required.

40000078-00000000 Power capping was deactivated by user [arg1].

Explanation: The power capping control has been disabled.

May also be shown as 4000007800000000 or 0x4000007800000000

Severity: Info

Alert Category: none

Serviceable: No

CIM Information: Prefix: IMM and **ID:** 0120

SNMP Trap ID:

Automatically notify Support: No

User response: Information only; no action is required.

40000079-00000000 Static Power Savings mode has been turned on by user [arg1].

Explanation: Static Power Savings mode turned on by user

May also be shown as 4000007900000000 or 0x4000007900000000

Severity: Info

Alert Category: none

Serviceable: No

CIM Information: Prefix: IMM and **ID:** 0121

SNMP Trap ID:

Automatically notify Support: No

User response: Information only; no action is required.

4000007a-00000000 Static Power Savings mode has been turned off by user [arg1].

Explanation: Static Power Savings mode turned off by user

May also be shown as 4000007a00000000 or 0x4000007a00000000

Severity: Info

Alert Category: none

Serviceable: No

CIM Information: Prefix: IMM and **ID:** 0122

SNMP Trap ID:

Automatically notify Support: No

User response: Information only; no action is required.

4000007b-00000000 Dynamic Power Savings mode has been turned on by user [arg1].

Explanation: Dynamic Power Savings mode turned on by user

May also be shown as 4000007b00000000 or 0x4000007b00000000

Severity: Info

Alert Category: none

Serviceable: No

CIM Information: Prefix: IMM and **ID:** 0123

SNMP Trap ID:

Automatically notify Support: No

User response: Information only; no action is required.

4000007c-00000000 Dynamic Power Savings mode has been turned off by user [arg1].

Explanation: Dynamic Power Savings mode turned off by user

May also be shown as 4000007c00000000 or 0x4000007c00000000

Severity: Info

Alert Category: none

Serviceable: No

CIM Information: Prefix: IMM and **ID:** 0124

SNMP Trap ID:

Automatically notify Support: No

User response: Information only; no action is required.

4000007d-00000000 Power cap and external throttling occurred.

Explanation: Power cap and external throttling has occurred.

May also be shown as 4000007d00000000 or 0x4000007d00000000

Severity: Info

Alert Category: none

Serviceable: No

CIM Information: Prefix: IMM and **ID:** 0125

SNMP Trap ID:

Automatically notify Support: No

User response: Information only; no action is required.

4000007e-00000000 External throttling occurred .

Explanation: External throttling has occurred.

May also be shown as 4000007e00000000 or 0x4000007e00000000

Severity: Info

Alert Category: none

Serviceable: No

CIM Information: Prefix: IMM and **ID:** 0126

SNMP Trap ID:

Automatically notify Support: No

User response: Information only; no action is required.

4000007f-00000000 Power cap throttling occurred.

Explanation: Power cap throttling has occurrred.

May also be shown as 4000007f00000000 or 0x4000007f00000000

Severity: Info

Alert Category: none

Serviceable: No

CIM Information: Prefix: IMM and **ID:** 0127

SNMP Trap ID:

Automatically notify Support: No

User response: Information only; no action is required.

40000080-00000000 Remote Control session started by user [arg1] in [arg2] mode.

Explanation: Remote Control session started

May also be shown as 4000008000000000 or 0x4000008000000000

Severity: Info

Alert Category: none

Serviceable: No

CIM Information: **Prefix:** IMM and **ID:** 0128

SNMP Trap ID:

Automatically notify Support: No

User response: Information only; no action is required.

40000081-00000000 PXE boot requested by user [arg1].

Explanation: PXE boot requested

May also be shown as 4000008100000000 or 0x4000008100000000

Severity: Info

Alert Category: none

Serviceable: No

CIM Information: **Prefix:** IMM and **ID:** 0129

SNMP Trap ID:

Automatically notify Support: No

User response: Information only; no action is required.

40000082-00000000 The measured power value has returned below the power cap value.

Explanation: The measured power value has returned below the power cap value.

May also be shown as 4000008200000000 or 0x4000008200000000

Severity: Info

Alert Category: Warning - Power

Serviceable: No

CIM Information: **Prefix:** IMM and **ID:** 0130

SNMP Trap ID: 164

Automatically notify Support: No

User response: Information only; no action is required.

40000083-00000000 The new minimum power cap value has returned below the power cap value.

Explanation: The new minimum power cap value has returned below the power cap value.

May also be shown as 4000008300000000 or 0x4000008300000000

Severity: Info

Alert Category: Warning - Power

Serviceable: No

CIM Information: **Prefix:** IMM and **ID:** 0131

SNMP Trap ID: 164

Automatically notify Support: No

User response: Information only; no action is required.

40000084-00000000 IMM firmware mismatch between nodes [arg1] and [arg2]. Please attempt to flash the IMM firmware to the same level on all nodes.

Explanation: A mismatch of IMM firmware between nodes has been detected.

May also be shown as 4000008400000000 or 0x4000008400000000

Severity: Error

Alert Category: System - Other

Serviceable: No

CIM Information: Prefix: IMM and **ID:** 0132

SNMP Trap ID: 22

Automatically notify Support: No

User response: Attempt to update the IMM firmware to the same level on all nodes.

Related Links:

- "Updating firmware and device drivers" on page 21
- IBM Flex System and IBM PureFlex Firmware Updates Best Practices

40000085-00000000 FPGA firmware mismatch between nodes [arg1] and [arg2]. Please attempt to flash the FPGA firmware to the same level on all nodes.

Explanation: A mismatch of FPGA firmware between nodes has been detected.

May also be shown as 4000008500000000 or 0x4000008500000000

Severity: Error

Alert Category: System - Other

Serviceable: No

CIM Information: Prefix: IMM and **ID:** 0133

SNMP Trap ID: 22

Automatically notify Support: No

User response: Attempt to update the FPGA firmware to the same level on all nodes.

Related Links:

- "Updating firmware and device drivers" on page 21
- IBM Flex System and IBM PureFlex Firmware Updates Best Practices

40000086-00000000 Test Call Home Generated by user [arg1].

Explanation: The specified user has generated a test automatic support notification.

May also be shown as 4000008600000000 or 0x4000008600000000

Severity: Info

Alert Category: none

Serviceable: No

CIM Information: Prefix: IMM and **ID:** 0134

SNMP Trap ID:

Automatically notify Support: Yes

User response: Information only; no action is required.

40000087-00000000 Manual Call Home by user [arg1]: [arg2].

Explanation: The specified user has submitted a service request.

May also be shown as 4000008700000000 or 0x4000008700000000

Severity: Info

Alert Category: none

Serviceable: No

CIM Information: Prefix: IMM and **ID:** 0135

SNMP Trap ID:

Automatically notify Support: Yes

User response: IBM Support will address the problem.

40000088-00000000 Management Controller [arg1]: Configuration restoration from a file by user [arg2] completed.

Explanation: The specified user has successfully restored the configuration of the specified management controller from a file.

May also be shown as 4000008800000000 or 0x4000008800000000

Severity: Info

Alert Category: none

Serviceable: No

CIM Information: Prefix: IMM and **ID:** 0136

SNMP Trap ID:

Automatically notify Support: No

User response: Information only; no action is required.

40000089-00000000 Management Controller [arg1]: Configuration restoration from a file by user [arg2] failed to complete.

Explanation: Restoration of the configuration of the specified management controller from a file by the specified user has not been completed.

May also be shown as 4000008900000000 or 0x4000008900000000

Severity: Error

Alert Category: System - Other

Serviceable: No

CIM Information: Prefix: IMM and **ID:** 0137

SNMP Trap ID: 22

Automatically notify Support: No

User response:

1. Turn off the server and disconnect it from the power source. You must disconnect the server from ac power to reset the IMM.
2. After 45 seconds, reconnect the server to the power source and turn on the server.
3. Retry the operation

4000008a-00000000 Management Controller [arg1]: Configuration restoration from a file by user [arg2] failed to start.

Explanation: Restoration of the configuration of the specified management controller from a file by the specified user has failed to start.

May also be shown as 4000008a00000000 or 0x4000008a00000000

Severity: Error

Alert Category: System - Other

Serviceable: No

CIM Information: Prefix: IMM and **ID:** 0138

SNMP Trap ID: 22

Automatically notify Support: No

User response:

1. Turn off the server and disconnect it from the power source. You must disconnect the server from ac power to reset the IMM.
2. After 45 seconds, reconnect the server to the power source and turn on the server.
3. Retry the operation

4000008b-00000000 One or more of the Storage Management IP addresses has changed.

Explanation: One or more of the Storage Management IP addresses has changed.

May also be shown as 4000008b00000000 or 0x4000008b00000000

Severity: Info

Alert Category: System - IMM Network event

Serviceable: No

CIM Information: Prefix: IMM and **ID:** 0139

SNMP Trap ID: 37

Automatically notify Support: No

User response: Information only; no action is required.

4000008c-00000000 Security: Userid: [arg1] had [arg2] login failures from a CIM client at IP address [arg3].

Explanation: A user has exceeded the maximum allowed number of unsuccessful login attempts from a CIM client and has been prevented from logging in for the lockout period.

May also be shown as 4000008c00000000 or 0x4000008c00000000

Severity: Warning

Alert Category: System - Remote Login

Serviceable: No

CIM Information: Prefix: IMM and **ID:** 0140

SNMP Trap ID: 30

Automatically notify Support: No

User response: Complete the following steps until the problem is solved:

1. Make sure that the correct login ID and password are being used.
2. Have the system administrator reset the login ID or password.

4000008d-00000000 Remote access attempt failed. Invalid userid or password received. Userid is [arg1] from a CIM client at IP address [arg2].

Explanation: A user has attempted to log in from a CIM client by using an invalid login ID or password.

May also be shown as 4000008d00000000 or 0x4000008d00000000

Severity: Info

Alert Category: System - Remote Login

Serviceable: No

CIM Information: Prefix: IMM and **ID:** 0141

SNMP Trap ID: 30

Automatically notify Support: No

User response: Make sure that the correct login ID and password are being used.

4000008e-00000000 Device [arg1] VPD is not valid.

Explanation: The VPD for a device is invalid.

May also be shown as 4000008e00000000 or 0x4000008e00000000

Severity: Warning

Alert Category: System - Other

Serviceable: No

CIM Information: Prefix: IMM and **ID:** 0142

SNMP Trap ID: 22

Automatically notify Support: No

User response: The device with invalid VPD data should be replaced.

4000008f-00000000 The bare metal connection process has been started.

Explanation: Bare Metal Connection process has been started

May also be shown as 4000008f00000000 or 0x4000008f00000000

Severity: Info

Alert Category: System - Other

Serviceable: No

CIM Information: Prefix: IMM and **ID:** 0143

SNMP Trap ID: 22

Automatically notify Support: No

User response: Information only; no action is required.

40000090-00000000 The bare metal update application reports a status of [arg1].

Explanation: Bare Metal Update Application Status

May also be shown as 4000009000000000 or 0x4000009000000000

Severity: Info

Alert Category: System - Other

Serviceable: No

CIM Information: Prefix: IMM and **ID:** 0144

SNMP Trap ID: 22

Automatically notify Support: No

User response: Information only; no action is required.

80010202-0701ffff Numeric sensor [NumericSensorElementName] going low (lower critical) has asserted.

Explanation: A voltage has dropped below its specified threshold.

May also be shown as 800102020701ffff or 0x800102020701ffff

Severity: Error

Alert Category: Critical - Voltage

Serviceable: Yes

CIM Information: **Prefix:** PLAT and **ID:** 0480

SNMP Trap ID: 1

Automatically notify Support: Yes

User response: Use one of the following procedures:

- If the specified sensor is Planar 3.3V or Planar 5V, replace the system board.
- If the specified sensor is Planar 12V, check the Chassis Management Module or Flex System Manager event log for power-supply-related issues, and resolve those issues. If the problem remains, replace the system board.

Related Links:

- "Removing the system-board assembly" on page 631
- "Installing the system-board assembly" on page 633

80010202-2801ffff Sensor Planar VBAT has detected low battery voltage.

Explanation: The CMOS battery voltage has dropped below its specified threshold.

May also be shown as 800102022801ffff or 0x800102022801ffff

Severity: Error

Alert Category: Critical - Voltage

Serviceable: Yes

CIM Information: **Prefix:** PLAT and **ID:** 0480

SNMP Trap ID: 1

Automatically notify Support: No

User response: Replace the CMOS battery.

Related Links:

- "Removing the CMOS battery" on page 587
- "Installing the CMOS battery" on page 588

80010701-3701ffff Numeric sensor Inlet Temp going high (upper non-critical) has asserted.

Explanation: The inlet temperature has exceeded its specified threshold.

May also be shown as 800107013701ffff or 0x800107013701ffff

Severity: Warning

Alert Category: Warning - Temperature

Serviceable: Yes

CIM Information: **Prefix:** PLAT and **ID:** 0490

SNMP Trap ID: 12

Automatically notify Support: No

User response: Complete the following steps until the problem is solved:

1. Check the Chassis Management Module or Flex System Manager event log for any fan- or cooling-related issues.
2. Make sure that the airflow at the front and rear of the chassis is not obstructed and that fillers are in place and correctly installed.
3. Make sure that the room temperature is within operating specifications.

80010701-3702ffff Sensor [NumericSensorElementName] going high (upper non-critical) has asserted.

Explanation: The inlet temperature has exceeded its specified threshold. The compute node has attempted a soft shutdown.

May also be shown as 800107013702ffff or 0x800107013702ffff

Severity: Warning

Alert Category: Warning - Temperature

Serviceable: Yes

CIM Information: Prefix: PLAT and **ID:** 0490

SNMP Trap ID: 12

Automatically notify Support: No

User response: Complete the following steps until the problem is solved:

1. Check the Chassis Management Module or Flex System Manager event log for any fan- or cooling-related issues.
2. Make sure that the airflow at the front and rear of the chassis is not obstructed and that fillers are in place and correctly installed.
3. Make sure that the room temperature is within operating specifications.

80010901-3701ffff Sensor [NumericSensorElementName] has detected a critical high inlet temperature.

Explanation: The inlet temperature has exceeded its specified threshold. The compute node has attempted a soft shutdown.

May also be shown as 800109013701ffff or 0x800109013701ffff

Severity: Error

Alert Category: Critical - Temperature

Serviceable: Yes

CIM Information: Prefix: PLAT and **ID:** 0494

SNMP Trap ID: 0

Automatically notify Support: No

User response: Complete the following steps until the problem is solved:

1. Check the Chassis Management Module or Flex System Manager event log for any fan- or cooling-related issues.
2. Make sure that the airflow at the front and rear of the chassis is not obstructed and that fillers are in place and correctly installed.
3. Make sure that the room temperature is within operating specifications.

80010901-3702ffff Numeric sensor [NumericSensorElementName] going high (upper critical) has asserted.

Explanation: The inlet temperature has exceeded its specified threshold. The compute node has attempted a soft shutdown.

May also be shown as 800109013702ffff or 0x800109013702ffff

Severity: Error

Alert Category: Critical - Temperature

Serviceable: Yes

CIM Information: **Prefix:** PLAT and **ID:** 0494

SNMP Trap ID: 0

Automatically notify Support: No

User response: Complete the following steps until the problem is solved:

1. Check the Chassis Management Module or Flex System Manager event log for any fan- or cooling-related issues.
2. Make sure that the airflow at the front and rear of the chassis is not obstructed and that fillers are in place and correctly installed.
3. Make sure that the room temperature is within operating specifications.

80010902-0701ffff Sensor [NumericSensorElementName] has detected high voltage.

Explanation: A voltage has exceeded its specified threshold.

May also be shown as 800109020701ffff or 0x800109020701ffff

Severity: Error

Alert Category: Critical - Voltage

Serviceable: Yes

CIM Information: **Prefix:** PLAT and **ID:** 0494

SNMP Trap ID: 1

Automatically notify Support: Yes

User response: Use one of the following procedures:

- If the specified sensor is Planar 3.3V or Planar 5V, replace the system board.
- If the specified sensor is Planar 12V, check the Chassis Management Module or Flex System Manager event log for power-supply-related issues, and resolve those issues. If the problem remains, replace the system board.

Related Links:

- "Removing the system-board assembly" on page 631
- "Installing the system-board assembly" on page 633

80010b01-3701ffff Numeric sensor Inlet Temp going high (upper non-recoverable) has asserted. has asserted.

Explanation: The inlet temperature has exceeded its specified threshold. The compute node has initiated a hard shutdown.

May also be shown as 80010b013701ffff or 0x80010b013701ffff

Severity: Error

Alert Category: Critical - Temperature

Serviceable: Yes

CIM Information: **Prefix:** PLAT and **ID:** 0498

SNMP Trap ID: 0

Automatically notify Support: No

User response: Complete the following steps until the problem is solved:

1. Check the Chassis Management Module or Flex System Manager event log for any fan- or cooling-related issues.
2. Make sure that the airflow at the front and rear of the chassis is not obstructed and that fillers are in place and correctly installed.
3. Make sure that the room temperature is within operating specifications.

80010b01-3702ffff Numeric sensor Pen Inlet Temp going high (upper non-recoverable) has asserted.

Explanation: The PEN inlet temperature has exceeded its specified threshold. The compute node has initiated a hard shutdown.

May also be shown as 80010b013702ffff or 0x80010b013702ffff

Severity: Error

Alert Category: Critical - Temperature

Serviceable: Yes

CIM Information: Prefix: PLAT and **ID:** 0498

SNMP Trap ID: 0

Automatically notify Support: No

User response: Complete the following steps until the problem is solved:

1. Check the Chassis Management Module or Flex System Manager event log for any fan- or cooling-related issues.
2. Make sure that the airflow at the front and rear of the chassis is not obstructed and that fillers are in place and correctly installed.
3. Make sure that the room temperature is within operating specifications.

80030006-2101ffff Sensor Sig Verify Fail has deasserted.

Explanation: The secure UEFI update has been completed.

May also be shown as 800300062101ffff or 0x800300062101ffff

Severity: Info

Alert Category: System - Other

Serviceable: No

CIM Information: Prefix: PLAT and **ID:** 0509

SNMP Trap ID:

Automatically notify Support: No

User response: Information only; no action is required.

8003010e-2581ffff Sensor Memory Resized has asserted.

Explanation: This message is for the use case when an implementation has detected a sensor has asserted.

May also be shown as 8003010e2581ffff or 0x8003010e2581ffff

Severity: Info

Alert Category: System - Other

Serviceable: No

CIM Information: Prefix: PLAT and **ID:** 0508

SNMP Trap ID:

Automatically notify Support: No

User response: This is a UEFI detected event. The UEFI diagnostic code for this event can be found in the logged IMM message text. Please refer to the UEFI diagnostic code in the "UEFI diagnostic code" section of the Information Center for the appropriate user response.

Related Links:

- “Finding the UEFI diagnostic code” on page 521

80070101-030101ff Sensor CPU 1 Overtemp has gone from from Normal state to Non-critical state.

Explanation: The temperature of microprocessor 1 has exceeded its specified threshold.

May also be shown as 80070101030101ff or 0x80070101030101ff

Severity: Warning

Alert Category: Warning - Temperature

Serviceable: Yes

CIM Information: Prefix: PLAT and **ID:** 0520

SNMP Trap ID: 12

Automatically notify Support: No

User response: Complete the following steps until the problem is solved:

1. Check the Chassis Management Module or Flex System Manager event log for any fan- or cooling-related issues.
2. Make sure that the airflow at the front and rear of the chassis is not obstructed and that fillers are in place and correctly installed.
3. Make sure that the room temperature is within operating specifications.

80070101-030201ff Sensor CPU 2 Overtemp has transitioned from normal to non-critical state.

Explanation: The temperature of microprocessor 2 has exceeded its specified threshold.

May also be shown as 80070101030201ff or 0x80070101030201ff

Severity: Warning

Alert Category: Warning - Temperature

Serviceable: Yes

CIM Information: Prefix: PLAT and **ID:** 0520

SNMP Trap ID: 12

Automatically notify Support: No

User response: Complete the following steps until the problem is solved:

1. Check the Chassis Management Module or Flex System Manager event log for any fan- or cooling-related issues.
2. Make sure that the airflow at the front and rear of the chassis is not obstructed and that fillers are in place and correctly installed.
3. Make sure that the room temperature is within operating specifications.

80070101-2c01ffff Sensor Mezz Exp 1 temp has transitioned from normal to non-critical state.

Explanation: The temperature of the I/O expansion adapter in I/O expansion connector 1 has exceeded its specified threshold.

May also be shown as 800701012c01ffff or 0x800701012c01ffff

Severity: Warning

Alert Category: Warning - Temperature

Serviceable: Yes

CIM Information: Prefix: PLAT and **ID:** 0520

SNMP Trap ID: 12

Automatically notify Support: No

User response: Complete the following steps until the problem is solved:

1. Check the Chassis Management Module or Flex System Manager event log for any fan- or cooling-related issues.

2. Make sure that the airflow at the front and rear of the chassis is not obstructed and that fillers are in place and correctly installed.
3. Make sure that the room temperature is within operating specifications.

80070101-2c02ffff Sensor Mezz Exp 2 temp has transitioned from normal to non-critical state.

Explanation: The temperature of the I/O expansion adapter in I/O expansion connector 2 has exceeded its specified threshold.

May also be shown as 800701012c02ffff or 0x800701012c02ffff

Severity: Warning

Alert Category: Warning - Temperature

Serviceable: Yes

CIM Information: Prefix: PLAT and **ID:** 0520

SNMP Trap ID: 12

Automatically notify Support: No

User response: Complete the following steps until the problem is solved:

1. Check the Chassis Management Module or Flex System Manager event log for any fan- or cooling-related issues.
2. Make sure that the airflow at the front and rear of the chassis is not obstructed and that fillers are in place and correctly installed.
3. Make sure that the room temperature is within operating specifications.

80070101-2c03ffff Sensor PEN MExp 3 Temp has transitioned from normal to non-critical state.

Explanation: The temperature of the PEN Mezzanine Expansion adapter has exceeded its specified threshold.

May also be shown as 800701012c03ffff or 0x800701012c03ffff

Severity: Warning

Alert Category: Warning - Temperature

Serviceable: Yes

CIM Information: Prefix: PLAT and **ID:** 0520

SNMP Trap ID: 12

Automatically notify Support: No

User response: Complete the following steps until the problem is solved:

1. Check the Chassis Management Module or Flex System Manager event log for any fan- or cooling-related issues.
2. Make sure that the airflow at the front and rear of the chassis is not obstructed and that fillers are in place and correctly installed.
3. Make sure that the room temperature is within operating specifications.

80070101-2c04ffff Sensor PEN MExp 4 Temp has transitioned from normal to non-critical state.

Explanation: The temperature of the PEN Mezzanine Expansion adapter has exceeded its specified threshold.

May also be shown as 800701012c04ffff or 0x800701012c04ffff

Severity: Warning

Alert Category: Warning - Temperature

Serviceable: Yes

CIM Information: Prefix: PLAT and **ID:** 0520

SNMP Trap ID: 12

Automatically notify Support: No

User response: Complete the following steps until the problem is solved:

1. Check the Chassis Management Module or Flex System Manager event log for any fan- or cooling-related issues.
2. Make sure that the airflow at the front and rear of the chassis is not obstructed and that fillers are in place and correctly installed.
3. Make sure that the room temperature is within operating specifications.

80070101-3101ffff Sensor PCIE 1 Overtemp has transitioned from normal to non-critical state.

Explanation: The temperature of the PCI expansion unit PCIe Card1 has exceeded its specified threshold.

May also be shown as 800701013101ffff or 0x800701013101ffff

Severity: Warning

Alert Category: Warning - Temperature

Serviceable: Yes

CIM Information: Prefix: PLAT and **ID:** 0520

SNMP Trap ID: 12

Automatically notify Support: No

User response: Complete the following steps until the problem is solved:

1. Check the Chassis Management Module or Flex System Manager event log for any fan- or cooling-related issues.
2. Make sure that the airflow at the front and rear of the chassis is not obstructed and that fillers are in place and correctly installed.
3. Make sure that the room temperature is within operating specifications.

80070101-3102ffff Sensor PCIE 2 Overtemp has transitioned from normal to non-critical state.

Explanation: The temperature of the PCI expansion unit PCIe Card2 has exceeded its specified threshold.

May also be shown as 800701013102ffff or 0x800701013102ffff

Severity: Warning

Alert Category: Warning - Temperature

Serviceable: Yes

CIM Information: Prefix: PLAT and **ID:** 0520

SNMP Trap ID: 12

Automatically notify Support: No

User response: Complete the following steps until the problem is solved:

1. Check the Chassis Management Module or Flex System Manager event log for any fan- or cooling-related issues.
2. Make sure that the airflow at the front and rear of the chassis is not obstructed and that fillers are in place and correctly installed.
3. Make sure that the room temperature is within operating specifications.

80070101-3103ffff Sensor PCIE 3 Overtemp has transitioned from normal to non-critical state.

Explanation: The temperature of the PCI expansion unit PCIe Card3 has exceeded its specified threshold.

May also be shown as 800701013103ffff or 0x800701013103ffff

Severity: Warning

Alert Category: Warning - Temperature

Serviceable: Yes

CIM Information: **Prefix:** PLAT and **ID:** 0520

SNMP Trap ID: 12

Automatically notify Support: No

User response: Complete the following steps until the problem is solved:

1. Check the Chassis Management Module or Flex System Manager event log for any fan- or cooling-related issues.
2. Make sure that the airflow at the front and rear of the chassis is not obstructed and that fillers are in place and correctly installed.
3. Make sure that the room temperature is within operating specifications.

80070101-3104ffff Sensor PCIE 4 Overtemp has transitioned from normal to non-critical state.

Explanation: The temperature of the PCI expansion unit PCIe Card4 has exceeded its specified threshold.

May also be shown as 800701013104ffff or 0x800701013104ffff

Severity: Warning

Alert Category: Warning - Temperature

Serviceable: Yes

CIM Information: **Prefix:** PLAT and **ID:** 0520

SNMP Trap ID: 12

Automatically notify Support: No

User response: Complete the following steps until the problem is solved:

1. Check the Chassis Management Module or Flex System Manager event log for any fan- or cooling-related issues.
2. Make sure that the airflow at the front and rear of the chassis is not obstructed and that fillers are in place and correctly installed.
3. Make sure that the room temperature is within operating specifications.

80070101-370202ff Sensor PEN Inlet Over T has transitioned from normal to non-critical state.

Explanation: The PCIe Expansion Node Inlet temperature has exceeded its specified threshold.

May also be shown as 80070101370202ff or 0x80070101370202ff

Severity: Warning

Alert Category: Warning - Temperature

Serviceable: Yes

CIM Information: **Prefix:** PLAT and **ID:** 0520

SNMP Trap ID: 12

Automatically notify Support: No

User response: Complete the following steps until the problem is solved:

1. Check the Chassis Management Module or Flex System Manager event log for any fan- or cooling-related issues.
2. Make sure that the airflow at the front and rear of the chassis is not obstructed and that fillers are in place and correctly installed.
3. Make sure that the room temperature is within operating specifications.

80070114-2201ffff Sensor [SensorElementName] has transitioned from normal to non-critical state.

Explanation: One of the following sensors has indicated an abnormal condition: TPM Lock, TPM Phy Pres Set.

May also be shown as 800701142201ffff or 0x800701142201ffff

Severity: Warning

Alert Category: Warning - Other

Serviceable: Yes

CIM Information: **Prefix:** PLAT and **ID:** 0520

SNMP Trap ID: 60

Automatically notify Support: No

User response: This is a UEFI detected event. To find the UEFI diagnostic code for this event, in the information center, follow the instructions in "Finding the UEFI diagnostic code" under "UEFI diagnostic codes." Then, in the information center, open the topic for the UEFI diagnostic code and follow the instructions under "User response."

Related Links:

- "Finding the UEFI diagnostic code" on page 521

80070201-2d0101ff Sensor PCH Overtemp has transitioned to critical from a less severe state.

Explanation: A temperature has exceeded its specified threshold.

May also be shown as 800702012d0101ff or 0x800702012d0101ff

Severity: Error

Alert Category: Critical - Temperature

Serviceable: Yes

CIM Information: **Prefix:** PLAT and **ID:** 0522

SNMP Trap ID: 0

Automatically notify Support: No

User response: Complete the following steps until the problem is solved:

1. Check the Chassis Management Module or Flex System Manager event log for any fan- or cooling-related issues.
2. Make sure that the airflow at the front and rear of the chassis is not obstructed and that fillers are in place and correctly installed.
3. Make sure that the room temperature is within operating specifications.

80070201-3101ffff Sensor PCIE 1 Overtemp has transitioned to critical from a less severe state.

Explanation: The temperature of the PCI expansion unit PCIe Card1 has exceeded its specified threshold.

May also be shown as 800702013101ffff or 0x800702013101ffff

Severity: Error

Alert Category: Critical - Temperature

Serviceable: Yes

CIM Information: **Prefix:** PLAT and **ID:** 0522

SNMP Trap ID: 0

Automatically notify Support: No

User response: Complete the following steps until the problem is solved:

1. Check the Chassis Management Module or Flex System Manager event log for any fan- or cooling-related issues.
2. Make sure that the airflow at the front and rear of the chassis is not obstructed and that fillers are in place and correctly installed.
3. Make sure that the room temperature is within operating specifications.

80070201-3102ffff Sensor PCIE 2 Overtemp has transitioned to critical from a less severe state.

Explanation: The temperature of the PCI expansion unit PCIe Card2 has exceeded its specified threshold.

May also be shown as 800702013102ffff or 0x800702013102ffff

Severity: Error

Alert Category: Critical - Temperature

Serviceable: Yes

CIM Information: Prefix: PLAT and **ID:** 0522

SNMP Trap ID: 0

Automatically notify Support: No

User response: Complete the following steps until the problem is solved:

1. Check the Chassis Management Module or Flex System Manager event log for any fan- or cooling-related issues.
2. Make sure that the airflow at the front and rear of the chassis is not obstructed and that fillers are in place and correctly installed.
3. Make sure that the room temperature is within operating specifications.

80070201-3103ffff Sensor PCIE 3 Overtemp has transitioned to critical from a less severe state.

Explanation: The temperature of the PCI expansion unit PCIe Card3 has exceeded its specified threshold.

May also be shown as 800702013103ffff or 0x800702013103ffff

Severity: Error

Alert Category: Critical - Temperature

Serviceable: Yes

CIM Information: Prefix: PLAT and **ID:** 0522

SNMP Trap ID: 0

Automatically notify Support: No

User response: Complete the following steps until the problem is solved:

1. Check the Chassis Management Module or Flex System Manager event log for any fan- or cooling-related issues.
2. Make sure that the airflow at the front and rear of the chassis is not obstructed and that fillers are in place and correctly installed.
3. Make sure that the room temperature is within operating specifications.

80070201-3104ffff Sensor PCIE 4 Overtemp has transitioned to critical from a less severe state.

Explanation: The temperature of the PCI expansion unit PCIe Card4 has exceeded its specified threshold.

May also be shown as 800702013104ffff or 0x800702013104ffff

Severity: Error

Alert Category: Critical - Temperature

Serviceable: Yes

CIM Information: Prefix: PLAT and **ID:** 0522

SNMP Trap ID: 0

Automatically notify Support: No

User response: Complete the following steps until the problem is solved:

1. Check the Chassis Management Module or Flex System Manager event log for any fan- or cooling-related issues.
2. Make sure that the airflow at the front and rear of the chassis is not obstructed and that fillers are in place and correctly installed.

3. Make sure that the room temperature is within operating specifications.

80070202-070101ff Sensor Planar Fault has gone to Critical state from a less severe state.

Explanation: A failure has been detected in the system board.

May also be shown as 80070202070101ff or 0x80070202070101ff

Severity: Error

Alert Category: Critical - Voltage

Serviceable: Yes

CIM Information: Prefix: PLAT and **ID:** 0522

SNMP Trap ID: 1

Automatically notify Support: No

User response: Complete the following steps:

1. Remove any recently installed components.
2. Try to power on the compute node.
   - If the compute node successfully powers on, complete the following steps:
     a. Check the ServerProven website to make sure that recently installed components are compatible with the compute node.
     b. Inspect the previously installed components for physical damage.
   - If the compute node does not successfully power on or if this is not the first occurrence of this problem, replace the system board.

Related Links:

- "Removing the system-board assembly" on page 631
- "Installing the system-board assembly" on page 633

80070202-070102ff Sensor Planar Fault has gone to Critical state from a less severe state.

Explanation: A failure has been detected in the system board.

May also be shown as 80070202070102ff or 0x80070202070102ff

Severity: Error

Alert Category: Critical - Voltage

Serviceable: Yes

CIM Information: Prefix: PLAT and **ID:** 0522

SNMP Trap ID: 1

Automatically notify Support: No

User response: Complete the following steps:

1. Remove any recently installed components.
2. Try to power on the compute node.
   - If the compute node successfully powers on, complete the following steps:
     a. Check the ServerProven website to make sure that recently installed components are compatible with the compute node.
     b. Inspect the previously installed components for physical damage.
   - If the compute node does not successfully power on or if this is not the first occurrence of this problem, replace the system board.

Related Links:

- "Removing the system-board assembly" on page 631
- "Installing the system-board assembly" on page 633

80070202-070103ff Sensor Planar Fault has gone to Critical state from a less severe state.

Explanation: A failure has been detected in the system board.

May also be shown as 80070202070103ff or 0x80070202070103ff

Severity: Error

Alert Category: Critical - Voltage

Serviceable: Yes

CIM Information: Prefix: PLAT and **ID:** 0522

SNMP Trap ID: 1

Automatically notify Support: No

User response: Complete the following steps:

1. Remove any recently installed components.
2. Try to power on the compute node.
   - If the compute node successfully powers on, complete the following steps:
     a. Check the ServerProven website to make sure that recently installed components are compatible with the compute node.
     b. Inspect the previously installed components for physical damage.
   - If the compute node does not successfully power on or if this is not the first occurrence of this problem, replace the system board.

Related Links:

- "Removing the system-board assembly" on page 631
- "Installing the system-board assembly" on page 633

80070202-070111ff Sensor Planar Fault has gone to Critical state from a less severe state.

Explanation: A failure has been detected in the system board.

May also be shown as 80070202070111ff or 0x80070202070111ff

Severity: Error

Alert Category: Critical - Voltage

Serviceable: Yes

CIM Information: Prefix: PLAT and **ID:** 0522

SNMP Trap ID: 1

Automatically notify Support: No

User response: Complete the following steps:

1. Remove any recently installed components.
2. Try to power on the compute node.
   - If the compute node successfully powers on, complete the following steps:
     a. Check the ServerProven website to make sure that recently installed components are compatible with the compute node.
     b. Inspect the previously installed components for physical damage.
   - If the compute node does not successfully power on or if this is not the first occurrence of this problem, replace the system board.

Related Links:

- "Removing the system-board assembly" on page 631
- "Installing the system-board assembly" on page 633

80070202-070116ff Sensor Planar Fault has gone to Critical state from a less severe state.

Explanation: A failure has been detected in the system board.

May also be shown as 80070202070116ff or 0x80070202070116ff

Severity: Error

Alert Category: Critical - Voltage

Serviceable: Yes

CIM Information: Prefix: PLAT and **ID:** 0522

SNMP Trap ID: 1

Automatically notify Support: No

User response: Complete the following steps:

1. Remove any recently installed components.
2. Try to power on the compute node.
   - If the compute node successfully powers on, complete the following steps:
     a. Check the ServerProven website to make sure that recently installed components are compatible with the compute node.
     b. Inspect the previously installed components for physical damage.
   - If the compute node does not successfully power on or if this is not the first occurrence of this problem, replace the system board.

Related Links:

- "Removing the system-board assembly" on page 631
- "Installing the system-board assembly" on page 633

80070202-070119ff Sensor Planar Fault has gone to Critical state from a less severe state.

Explanation: A failure has been detected in the system board.

May also be shown as 80070202070119ff or 0x80070202070119ff

Severity: Error

Alert Category: Critical - Voltage

Serviceable: Yes

CIM Information: Prefix: PLAT and **ID:** 0522

SNMP Trap ID: 1

Automatically notify Support: No

User response: Complete the following steps:

1. Remove any recently installed components.
2. Try to power on the compute node.
   - If the compute node successfully powers on, complete the following steps:
     a. Check the ServerProven website to make sure that recently installed components are compatible with the compute node.
     b. Inspect the previously installed components for physical damage.
   - If the compute node does not successfully power on or if this is not the first occurrence of this problem, replace the system board.

Related Links:

- "Removing the system-board assembly" on page 631
- "Installing the system-board assembly" on page 633

80070202-0701ffff Sensor Planar Fault has gone to Critical state from a less severe state.

Explanation: A failure has been detected in the system board.

May also be shown as 800702020701ffff or 0x800702020701ffff

Severity: Error

Alert Category: Critical - Voltage

Serviceable: Yes

CIM Information: Prefix: PLAT and **ID:** 0522

SNMP Trap ID: 1

Automatically notify Support: No

User response: Complete the following steps:

1. Remove any recently installed components.
2. Try to power on the compute node.
   - If the compute node successfully powers on, complete the following steps:
     a. Check the ServerProven website to make sure that recently installed components are compatible with the compute node.
     b. Inspect the previously installed components for physical damage.
   - If the compute node does not successfully power on or if this is not the first occurrence of this problem, replace the system board.

Related Links:

- "Removing the system-board assembly" on page 631
- "Installing the system-board assembly" on page 633

80070202-10020000 Sensor SEN Vol Fault has transitioned to critical from a less severe state.

Explanation: A failure has been detected in the SEN planar board.

May also be shown as 8007020210020000 or 0x8007020210020000

Severity: Error

Alert Category: Critical - Voltage

Serviceable: Yes

CIM Information: Prefix: PLAT and **ID:** 0522

SNMP Trap ID: 1

Automatically notify Support: No

User response: Complete the following steps:

1. Remove any recently installed components.
2. Try to power on the compute node.
   - If the compute node successfully powers on, complete the following steps:
     a. Check the ServerProven website to make sure that recently installed components are compatible with the compute node.
     b. Inspect the previously installed components for physical damage.
   - If the compute node does not successfully power on or if this is not the first occurrence of this problem, replace the system board.

Related Links:

- "Removing the system-board assembly" on page 631
- "Installing the system-board assembly" on page 633

80070202-10020002 Sensor SEN Vol Fault has transitioned to critical from a less severe state.

Explanation: A failure has been detected in the SEN planar board.

May also be shown as 8007020210020002 or 0x8007020210020002

Severity: Error

Alert Category: Critical - Voltage

Serviceable: Yes

CIM Information: Prefix: PLAT and **ID:** 0522

SNMP Trap ID: 1

Automatically notify Support: No

User response: Complete the following steps:

1. Remove any recently installed components.
2. Try to power on the compute node.
   - If the compute node successfully powers on, complete the following steps:
     a. Check the ServerProven website to make sure that recently installed components are compatible with the compute node.
     b. Inspect the previously installed components for physical damage.
   - If the compute node does not successfully power on or if this is not the first occurrence of this problem, replace the system board.

Related Links:

- "Removing the system-board assembly" on page 631
- "Installing the system-board assembly" on page 633

80070202-10020004 Sensor SEN Vol Fault has transitioned to critical from a less severe state.

Explanation: A failure has been detected in the SEN planar board.

May also be shown as 8007020210020004 or 0x8007020210020004

Severity: Error

Alert Category: Critical - Voltage

Serviceable: Yes

CIM Information: Prefix: PLAT and **ID:** 0522

SNMP Trap ID: 1

Automatically notify Support: No

User response: Complete the following steps:

1. Remove any recently installed components.
2. Try to power on the compute node.
   - If the compute node successfully powers on, complete the following steps:
     a. Check the ServerProven website to make sure that recently installed components are compatible with the compute node.
     b. Inspect the previously installed components for physical damage.
   - If the compute node does not successfully power on or if this is not the first occurrence of this problem, replace the system board.

Related Links:

- "Removing the system-board assembly" on page 631
- "Installing the system-board assembly" on page 633

80070202-10020008 Sensor SEN Vol Fault has transitioned to critical from a less severe state.

Explanation: A failure has been detected in the SEN planar board.

May also be shown as 8007020210020008 or 0x8007020210020008

Severity: Error

Alert Category: Critical - Voltage

Serviceable: Yes

CIM Information: Prefix: PLAT and **ID:** 0522

SNMP Trap ID: 1

Automatically notify Support: No

User response: Complete the following steps:

1. Remove any recently installed components.
2. Try to power on the compute node.
   - If the compute node successfully powers on, complete the following steps:
     a. Check the ServerProven website to make sure that recently installed components are compatible with the compute node.
     b. Inspect the previously installed components for physical damage.
   - If the compute node does not successfully power on or if this is not the first occurrence of this problem, replace the system board.

Related Links:

- "Removing the system-board assembly" on page 631
- "Installing the system-board assembly" on page 633

80070202-10020010 Sensor SEN Vol Fault has transitioned to critical from a less severe state.

Explanation: A failure has been detected in the SEN planar board.

May also be shown as 8007020210020010 or 0x8007020210020010

Severity: Error

Alert Category: Critical - Voltage

Serviceable: Yes

CIM Information: Prefix: PLAT and **ID:** 0522

SNMP Trap ID: 1

Automatically notify Support: No

User response: Complete the following steps:

1. Remove any recently installed components.
2. Try to power on the compute node.
   - If the compute node successfully powers on, complete the following steps:
     a. Check the ServerProven website to make sure that recently installed components are compatible with the compute node.
     b. Inspect the previously installed components for physical damage.
   - If the compute node does not successfully power on or if this is not the first occurrence of this problem, replace the system board.

Related Links:

- "Removing the system-board assembly" on page 631
- "Installing the system-board assembly" on page 633

80070202-10020040 Sensor SEN Vol Fault has transitioned to critical from a less severe state.

Explanation: A failure has been detected in the SEN planar board.

May also be shown as 8007020210020040 or 0x8007020210020040

Severity: Error

Alert Category: Critical - Voltage

Serviceable: Yes

CIM Information: Prefix: PLAT and **ID:** 0522

SNMP Trap ID: 1

Automatically notify Support: No

User response: Complete the following steps:

1. Remove any recently installed components.
2. Try to power on the compute node.
   - If the compute node successfully powers on, complete the following steps:
     a. Check the ServerProven website to make sure that recently installed components are compatible with the compute node.
     b. Inspect the previously installed components for physical damage.
   - If the compute node does not successfully power on or if this is not the first occurrence of this problem, replace the system board.

Related Links:

- "Removing the system-board assembly" on page 631
- "Installing the system-board assembly" on page 633

80070202-1002ffff Sensor SEN Vol Fault has transitioned to critical from a less severe state.

Explanation: A failure has been detected in the SEN planar board.

May also be shown as 800702021002ffff or 0x800702021002ffff

Severity: Error

Alert Category: Critical - Voltage

Serviceable: Yes

CIM Information: Prefix: PLAT and **ID:** 0522

SNMP Trap ID: 1

Automatically notify Support: No

User response: Complete the following steps:

1. Remove any recently installed components.
2. Try to power on the compute node.
   - If the compute node successfully powers on, complete the following steps:
     a. Check the ServerProven website to make sure that recently installed components are compatible with the compute node.
     b. Inspect the previously installed components for physical damage.
   - If the compute node does not successfully power on or if this is not the first occurrence of this problem, replace the system board.

Related Links:

- "Removing the system-board assembly" on page 631
- "Installing the system-board assembly" on page 633

80070202-190100ff Sensor PEN Planar Fault has transitioned to critical from a less severe state.

Explanation: A failure has been detected in the PEN planar board.

May also be shown as 80070202190100ff or 0x80070202190100ff

Severity: Error

Alert Category: Critical - Voltage

Serviceable: Yes

CIM Information: Prefix: PLAT and **ID:** 0522

SNMP Trap ID: 1

Automatically notify Support: No

User response: Complete the following steps:

1. Remove any recently installed components.
2. Try to power on the compute node.
   - If the compute node successfully powers on, complete the following steps:
     a. Check the ServerProven website to make sure that recently installed components are compatible with the compute node.
     b. Inspect the previously installed components for physical damage.
   - If the compute node does not successfully power on or if this is not the first occurrence of this problem, replace the system board.

Related Links:

- "Removing the system-board assembly" on page 631
- "Installing the system-board assembly" on page 633

80070202-190104ff Sensor PEN Planar Fault has transitioned to critical from a less severe state.

Explanation: A failure has been detected in the PEN planar board.

May also be shown as 80070202190104ff or 0x80070202190104ff

Severity: Error

Alert Category: Critical - Voltage

Serviceable: Yes

CIM Information: Prefix: PLAT and **ID:** 0522

SNMP Trap ID: 1

Automatically notify Support: No

User response: Complete the following steps:

1. Remove any recently installed components.
2. Try to power on the compute node.
   - If the compute node successfully powers on, complete the following steps:
     a. Check the ServerProven website to make sure that recently installed components are compatible with the compute node.
     b. Inspect the previously installed components for physical damage.
   - If the compute node does not successfully power on or if this is not the first occurrence of this problem, replace the system board.

Related Links:

- "Removing the system-board assembly" on page 631
- "Installing the system-board assembly" on page 633

80070202-1901ffff Sensor PEN Planar Fault has transitioned to critical from a less severe state.

Explanation: A failure has been detected in the PEN planar board.

May also be shown as 800702021901ffff or 0x800702021901ffff

Severity: Error

Alert Category: Critical - Voltage

Serviceable: Yes

CIM Information: Prefix: PLAT and **ID:** 0522

SNMP Trap ID: 1

Automatically notify Support: No

User response: Complete the following steps:

1. Remove any recently installed components.
2. Try to power on the compute node.
   - If the compute node successfully powers on, complete the following steps:
     a. Check the ServerProven website to make sure that recently installed components are compatible with the compute node.
     b. Inspect the previously installed components for physical damage.
   - If the compute node does not successfully power on or if this is not the first occurrence of this problem, replace the system board.

Related Links:

- "Removing the system-board assembly" on page 631
- "Installing the system-board assembly" on page 633

80070202-19020010 Sensor SEN Vol Fault has transitioned to critical from a less severe state.

Explanation: A failure has been detected in the SEN planar board.

May also be shown as 8007020219020010 or 0x8007020219020010

Severity: Error

Alert Category: Critical - Voltage

Serviceable: Yes

CIM Information: Prefix: PLAT and **ID:** 0522

SNMP Trap ID: 1

Automatically notify Support: No

User response: Complete the following steps:

1. Remove any recently installed components.
2. Try to power on the compute node.
   - If the compute node successfully powers on, complete the following steps:
     a. Check the ServerProven website to make sure that recently installed components are compatible with the compute node.
     b. Inspect the previously installed components for physical damage.
   - If the compute node does not successfully power on or if this is not the first occurrence of this problem, replace the system board.

Related Links:

- "Removing the system-board assembly" on page 631
- "Installing the system-board assembly" on page 633

80070202-1902ffff Sensor SEN Vol Fault has transitioned to critical from a less severe state.

Explanation: A failure has been detected in the SEN planar board.

May also be shown as 800702021902ffff or 0x800702021902ffff

Severity: Error

Alert Category: Critical - Voltage

Serviceable: Yes

CIM Information: Prefix: PLAT and **ID:** 0522

SNMP Trap ID: 1

Automatically notify Support: No

User response: Complete the following steps:

1. Remove any recently installed components.
2. Try to power on the compute node.
   - If the compute node successfully powers on, complete the following steps:
     a. Check the ServerProven website to make sure that recently installed components are compatible with the compute node.
     b. Inspect the previously installed components for physical damage.
   - If the compute node does not successfully power on or if this is not the first occurrence of this problem, replace the system board.

Related Links:

- "Removing the system-board assembly" on page 631
- "Installing the system-board assembly" on page 633

8007020f-2201ffff Sensor TXT ACM Module has transitioned to critical from a less severe state.

Explanation: This message is for the use case when an implementation has detected a Sensor transitioned to critical from less severe.

May also be shown as 8007020f2201ffff or 0x8007020f2201ffff

Severity: Error

Alert Category: Critical - Other

Serviceable: Yes

CIM Information: Prefix: PLAT and **ID:** 0522

SNMP Trap ID: 50

Automatically notify Support: No

User response: This is a UEFI detected event. The UEFI diagnostic code for this event can be found in the logged IMM message text. Please refer to the UEFI diagnostic code in the "UEFI diagnostic code" section of the Info Center for the appropriate user response.

Related Links:

- "Finding the UEFI diagnostic code" on page 521

8007020f-2582ffff Sensor No I/O Resources has transitioned to critical from a less severe state.

Explanation: This message is for the use case when an implementation has detected a Sensor transitioned to critical from less severe.

May also be shown as 8007020f2582ffff or 0x8007020f2582ffff

Severity: Error

Alert Category: Critical - Other

Serviceable: Yes

CIM Information: **Prefix:** PLAT and **ID:** 0522

SNMP Trap ID: 50

Automatically notify Support: No

User response: This is a UEFI detected event. The UEFI diagnostic code for this event can be found in the logged IMM message text. Please refer to the UEFI diagnostic code in the "UEFI diagnostic code" section of the Info Center for the appropriate user response.

80070215-1002ffff Sensor [SensorElementName] has transitioned to critical from a less severe state.

Explanation: The Storage Expansion Node drawer is open or not closed properly.

May also be shown as 800702151002ffff or 0x800702151002ffff

Severity: Error

Alert Category: Critical - Other

Serviceable: Yes

CIM Information: **Prefix:** PLAT and **ID:** 0522

SNMP Trap ID: 50

Automatically notify Support: No

User response: Close the Storage Expansion Node drawer or push again to make sure the drawer is closed.

80070215-1902ffff Sensor [SensorElementName] has transitioned to critical from a less severe state.

Explanation: The Storage Expansion Node drawer is open or not closed properly.

May also be shown as 800702151902ffff or 0x800702151902ffff

Severity: Error

Alert Category: Critical - Other

Serviceable: Yes

CIM Information: **Prefix:** PLAT and **ID:** 0522

SNMP Trap ID: 50

Automatically notify Support: No

User response: Close the Storage Expansion Node drawer or push again to make sure the drawer is closed.

80070217-0b05ffff Sensor ETE Fault has transitioned to critical from a less severe state.

Explanation: A failure has been detected in the interposer card.

May also be shown as 800702170b05ffff or 0x800702170b05ffff

Severity: Error

Alert Category: Critical - Other

Serviceable: Yes

CIM Information: **Prefix:** PLAT and **ID:** 0522

SNMP Trap ID: 50

Automatically notify Support: No

User response:

1. Make sure that the interposer card is connected correctly. If the error remains, check the log for faults on the attached expansion unit and resolve them.

2. Replace the attached expansion unit.

Related Links:

- "Removing an I/O expansion adapter" on page 605
- "Installing an I/O expansion adapter" on page 606

80070217-0b81ffff Sensor PEN FHR Empty has transitioned to critical from a less severe state.

Explanation: The Full Height Riser Card in the PCIe Expansion Node has been detected as missing. The PCIe Expansion Node will not power on without this card installed.

May also be shown as 800702170b81ffff or 0x800702170b81ffff

Severity: Error

Alert Category: Critical - Other

Serviceable: Yes

CIM Information: Prefix: PLAT and **ID:** 0522

SNMP Trap ID: 50

Automatically notify Support: No

User response: If the Full Height Riser (FHR) is not installed in the PEN, then the FHR needs to be installed in the PCIe Expansion Node (PEN) to remove this alert and allow the system to power on. If the FHR is installed, then remove the Compute Node and PEN from the chassis, and remove the FHR. Reinstall the FHR in the base planar in the PEN, and verify if this alert has been cleared. If this alert continues to occur, then replace the FHR. If after replacing the FHR, the alert continues to occur, then replace the base planar on the PEN.

80070217-0b82ffff Sensor PEN LPR Empty has transitioned to critical from a less severe state.

Explanation: The Low Profile Riser Card in the PEN has been detected as missing The PCIe Expansion Node will not power on without this card installed.

May also be shown as 800702170b82ffff or 0x800702170b82ffff

Severity: Error

Alert Category: Critical - Other

Serviceable: Yes

CIM Information: Prefix: PLAT and **ID:** 0522

SNMP Trap ID: 50

Automatically notify Support: No

User response: If the Low Profile Riser (LPR) is not installed in the PCIe Expansion Node (PEN), then the LPR needs to be installed in the PEN to remove this alert and allow the system to power on. If the LPR is installed, then remove the Compute Node and PEN from the chassis, and remove the LPR. Reinstall the LPR in the base planar in the PEN, and verify if this alert has been cleared. If this alert continues to occur, then replace the LPR. If after replacing the LPR, the alert continues to occur, then replace the base planar on the PEN.

80070217-1002ffff Sensor [SensorElementName] has transitioned to critical from a less severe state.

Explanation: For SEN Adapter : The raid cache adapter card on the Storage Expansion Node is absent or not attached properly. For SEN Ctrl Panel : The LED panel in the front of the Storage Expansion Node is absent or not attached properly.

May also be shown as 800702171002ffff or 0x800702171002ffff

Severity: Error

Alert Category: Critical - Other

Serviceable: Yes

CIM Information: **Prefix:** PLAT and **ID:** 0522

SNMP Trap ID: 50

Automatically notify Support: No

User response: For SEN Adapter : Check the raid cache adapter card cable and make sure it is attached to the main board properly. For SEN Ctrl Panel : Check the LED panel cable and make sure it is attached to the main board properly.

80070217-1902ffff Sensor [SensorElementName] has transitioned to critical from a less severe state.

Explanation: For SEN Adapter : The raid cache adapter card on the Storage Expansion Node is absent or not attached properly. For SEN Ctrl Panel : The LED panel in the front of the Storage Expansion Node is absent or not attached properly.

May also be shown as 800702171902ffff or 0x800702171902ffff

Severity: Error

Alert Category: Critical - Other

Serviceable: Yes

CIM Information: **Prefix:** PLAT and **ID:** 0522

SNMP Trap ID: 50

Automatically notify Support: No

User response: For SEN Adapter : Check the raid cache adapter card cable and make sure it is attached to the main board properly. For SEN Ctrl Panel : Check the LED panel cable and make sure it is attached to the main board properly.

80070217-1f02ffff Sensor ETE Fault has transitioned to critical from a less severe state.

Explanation: A failure has been detected in the interposer cable.

May also be shown as 800702171f02ffff or 0x800702171f02ffff

Severity: Error

Alert Category: Critical - Other

Serviceable: Yes

CIM Information: **Prefix:** PLAT and **ID:** 0522

SNMP Trap ID: 50

Automatically notify Support: No

User response:

1. Make sure that the interposer cable is connected correctly. If the error remains, check the log for faults on the attached expansion unit and resolve them.
2. Replace the attached expansion unit.

80070217-2c01ffff Sensor Mezz Exp 1 Fault has transitioned to critical from a less severe state.

Explanation: A problem has been detected in the I/O expansion adapter in I/O expansion connector 1. The adapter is unable to initialize.

May also be shown as 800702172c01ffff or 0x800702172c01ffff

Severity: Error

Alert Category: Critical - Other

Serviceable: Yes

CIM Information: **Prefix:** PLAT and **ID:** 0522

SNMP Trap ID: 50

Automatically notify Support: No

User response: Complete the following steps:

1. Remove any recently installed components from the PCI expansion unit.
2. Try to power on the chassis.
   - If the chassis successfully powers on, complete the following steps:
     a. Check the ServerProven website to make sure that recently installed components are compatible with the chassis.
     b. Inspect the previously installed components for physical damage.
   - If the chassis does not successfully power on or if this is not the first occurrence of this problem, replace the PCI expansion unit.

[Peliminary]

80070217-2c02ffff Sensor Mezz Exp 2 Fault has transitioned to critical from a less severe state.

Explanation: A problem was detected in the I/O expansion adapter in I/O expansion connector 2. The adapter is unable to initialize.

May also be shown as 800702172c02ffff or 0x800702172c02ffff

Severity: Error

Alert Category: Critical - Other

Serviceable: Yes

CIM Information: Prefix: PLAT and **ID:** 0522

SNMP Trap ID: 50

Automatically notify Support: No

User response: Complete the following steps:

1. Remove any recently installed components from the PCI expansion unit.
2. Try to power on the chassis.
   - If the chassis successfully powers on, complete the following steps:
     a. Check the ServerProven website to make sure that recently installed components are compatible with the chassis.
     b. Inspect the previously installed components for physical damage.
   - If the chassis does not successfully power on or if this is not the first occurrence of this problem, replace the PCI expansion unit.

[Peliminary]

80070217-2c03ffff Sensor PEN MExp 3 Fault has transitioned to critical from a less severe state.

Explanation: A problem was detected in the PEN Mzzanine Expansion adapter in I/O expansion connector 3. The adapter is unable to initialize.

May also be shown as 800702172c03ffff or 0x800702172c03ffff

Severity: Error

Alert Category: Critical - Other

Serviceable: Yes

CIM Information: Prefix: PLAT and **ID:** 0522

SNMP Trap ID: 50

Automatically notify Support: No

User response: Complete the following steps:

1. Remove any recently installed components from the PCI expansion unit.
2. Try to power on the chassis.
   - If the chassis successfully powers on, complete the following steps:
     a. Check the ServerProven website to make sure that recently installed components are compatible with the chassis.
     b. Inspect the previously installed components for physical damage.
   - If the chassis does not successfully power on or if this is not the first occurrence of this problem, replace the PCI expansion unit.

[Peliminary]

80070217-2c04ffff Sensor PEN MExp 4 Fault has transitioned to critical from a less severe state.

Explanation: A problem was detected in the PEN Mzzanine Expansion adapter in I/O expansion connector 4. The adapter is unable to initialize.

May also be shown as 800702172c04ffff or 0x800702172c04ffff

Severity: Error

Alert Category: Critical - Other

Serviceable: Yes

CIM Information: Prefix: PLAT and **ID:** 0522

SNMP Trap ID: 50

Automatically notify Support: No

User response: Complete the following steps:

1. Remove any recently installed components from the PCI expansion unit.
2. Try to power on the chassis.
   - If the chassis successfully powers on, complete the following steps:
     a. Check the ServerProven website to make sure that recently installed components are compatible with the chassis.
     b. Inspect the previously installed components for physical damage.
   - If the chassis does not successfully power on or if this is not the first occurrence of this problem, replace the PCI expansion unit.

[Peliminary]

80070217-3101ffff Sensor PEN Slot1 Empty has transitioned to critical from a less severe state.

Explanation: PCIe adapter slot 1 in the PCI expansion unit is empty.

May also be shown as 800702173101ffff or 0x800702173101ffff

Severity: Error

Alert Category: Critical - Other

Serviceable: Yes

CIM Information: Prefix: PLAT and **ID:** 0522

SNMP Trap ID: 50

Automatically notify Support: No

User response: PCIe adapter slot 1 in the PCI expansion unit must not be empty. Install either a PCIe adapter or a filler in this slot. If a baffle or PCIe adapter card is installed in the slot, remove the riser and reseat the card, then reinstall the riser into the PEN to clear the critical error. If the error does not clear after reseating the PCEi card or baffle, then replace the riser to resolve the alert If replacing the riser does not resolve the alert, then replace the PCIe

adapter card or baffle. If replacing the both the riser and the PCIE adapter card or baffle does not resolve the defect, then replace the system planar in the PEN.

Related Links:

- "Removing an I/O expansion adapter" on page 605
- "Installing an I/O expansion adapter" on page 606
- "Removing a fabric connector" on page 597
- "Installing a fabric connector" on page 598

80070217-3102ffff Sensor PEN Slot2 Empty has transitioned to critical from a less severe state.

Explanation: PCIe adapter slot 2 in the PCI expansion unit is empty.

May also be shown as 800702173102ffff or 0x800702173102ffff

Severity: Error

Alert Category: Critical - Other

Serviceable: Yes

CIM Information: Prefix: PLAT and **ID:** 0522

SNMP Trap ID: 50

Automatically notify Support: No

User response: PCIe adapter slot 2 in the PCI expansion unit must not be empty. Install either a PCIe adapter or a filler in this slot. If a baffle or PCIe adapter card is installed in the slot, remove the riser and reseat the card, then reinstall the riser into the PEN to clear the critical error. If the error does not clear after reseating the PCEi card or baffle, then replace the riser to resolve the alert If replacing the riser does not resolve the alert, then replace the PCIe adapter card or baffle. If replacing the both the riser and the PCIE adapter card or baffle does not resolve the defect, then replace the system planar in the PEN.

Related Links:

- "Removing an I/O expansion adapter" on page 605
- "Installing an I/O expansion adapter" on page 606
- "Removing a fabric connector" on page 597
- "Installing a fabric connector" on page 598

80070217-3103ffff Sensor PEN Slot3 Empty has transitioned to critical from a less severe state.

Explanation: PCIe adapter slot 3 in the PCI expansion unit is empty.

May also be shown as 800702173103ffff or 0x800702173103ffff

Severity: Error

Alert Category: Critical - Other

Serviceable: Yes

CIM Information: Prefix: PLAT and **ID:** 0522

SNMP Trap ID: 50

Automatically notify Support: No

User response: PCIe adapter slot 3 in the PCI expansion unit must not be empty. Install either a PCIe adapter or a filler in this slot. If a baffle or PCIe adapter card is installed in the slot, remove the riser and reseat the card, then reinstall the riser into the PEN to clear the critical error. If the error does not clear after reseating the PCEi card or baffle, then replace the riser to resolve the alert If replacing the riser does not resolve the alert, then replace the PCIe adapter card or baffle. If replacing the both the riser and the PCIE adapter card or baffle does not resolve the defect, then replace the system planar in the PEN.

Related Links:

- "Removing an I/O expansion adapter" on page 605

- "Installing an I/O expansion adapter" on page 606
- "Removing a fabric connector" on page 597
- "Installing a fabric connector" on page 598

80070217-3104ffff Sensor PEN Slot4 Empty has transitioned to critical from a less severe state.

Explanation: PCIe adapter slot 4 in the PCI expansion unit is empty.

May also be shown as 800702173104ffff or 0x800702173104ffff

Severity: Error

Alert Category: Critical - Other

Serviceable: Yes

CIM Information: Prefix: PLAT and **ID:** 0522

SNMP Trap ID: 50

Automatically notify Support: No

User response: PCIe adapter slot 4 in the PCI expansion unit must not be empty. Install either a PCIe adapter or a filler in this slot. If a baffle or PCIe adapter card is installed in the slot, remove the riser and reseat the card, then reinstall the riser into the PEN to clear the critical error. If the error does not clear after reseating the PCEi card or baffle, then replace the riser to resolve the alert If replacing the riser does not resolve the alert, then replace the PCIe adapter card or baffle. If replacing the both the riser and the PCIE adapter card or baffle does not resolve the defect, then replace the system planar in the PEN.

Related Links:

- "Removing an I/O expansion adapter" on page 605
- "Installing an I/O expansion adapter" on page 606
- "Removing a fabric connector" on page 597
- "Installing a fabric connector" on page 598

80070219-10020000 Sensor SEN LSI Fault has transitioned to critical from a less severe state.

Explanation: SEN LSI Chipset Fault has been detected on SEN

May also be shown as 8007021910020000 or 0x8007021910020000

Severity: Error

Alert Category: Critical - Other

Serviceable: Yes

CIM Information: Prefix: PLAT and **ID:** 0522

SNMP Trap ID: 50

Automatically notify Support: No

User response: Complete the following steps:

1. Remove any recently installed components.
2. Try to power on the node.
   - If the node successfully powers on and the drives on SEN are accessiable, complete the following steps:
     a. Check the ServerProven website to make sure that recently installed components are compatible with the compute node.
     b. Inspect the previously installed components for physical damage.
   - If the node does not successfully power on or if the drives on SEN are unaccessiable or if this is not the first occurrence of this problem, (trained service technician only) replace the SEN system board.

Related Links:

- "Finding the UEFI diagnostic code" on page 521

80070219-19020000 Sensor SEN LSI Fault has transitioned to critical from a less severe state.

Explanation: SEN LSI Chipset Fault has been detected on SEN

May also be shown as 8007021919020000 or 0x8007021919020000

Severity: Error

Alert Category: Critical - Other

Serviceable: Yes

CIM Information: Prefix: PLAT and **ID:** 0522

SNMP Trap ID: 50

Automatically notify Support: No

User response: Complete the following steps:

1. Remove any recently installed components.
2. Try to power on the node.
   - If the node successfully powers on and the drives on SEN are accessiable, complete the following steps:
     a. Check the ServerProven website to make sure that recently installed components are compatible with the compute node.
     b. Inspect the previously installed components for physical damage.
   - If the node does not successfully power on or if the drives on SEN are unaccessiable or if this is not the first occurrence of this problem, (trained service technician only) replace the SEN system board.

Related Links:

- "Finding the UEFI diagnostic code" on page 521

8007021b-0301ffff Sensor CPU 1 QPILinkErr has transitioned to critical from a less severe state.

Explanation: CPU 1 QPI Link Failure detected.

May also be shown as 8007021b0301ffff or 0x8007021b0301ffff

Severity: Error

Alert Category: Critical - Other

Serviceable: Yes

CIM Information: Prefix: PLAT and **ID:** 0522

SNMP Trap ID: 50

Automatically notify Support: Yes

User response: This is a UEFI detected event. The UEFI diagnostic code for this event can be found in the logged IMM message text. Please refer to the UEFI diagnostic code in the "UEFI diagnostic code" section of the Information Center for the appropriate user response.

Related Links:

- "Finding the UEFI diagnostic code" on page 521

8007021b-0302ffff Sensor CPU 2 QPILinkErr has transitioned to critical from a less severe state.

Explanation: CPU 2 QPI Link Failure detected.

May also be shown as 8007021b0302ffff or 0x8007021b0302ffff

Severity: Error

Alert Category: Critical - Other

Serviceable: Yes

CIM Information: Prefix: PLAT and **ID:** 0522

SNMP Trap ID: 50

Automatically notify Support: Yes

User response: This is a UEFI detected event. The UEFI diagnostic code for this event can be found in the logged IMM message text. Please refer to the UEFI diagnostic code in the "UEFI diagnostic code" section of the Information Center for the appropriate user response.

Related Links:

- "Finding the UEFI diagnostic code" on page 521

80070301-030101ff Sensor CPU 1 Overtemp has gone to Nonrecoverable state from a less severe state.

Explanation: The microprocessor 1 temperature has risen above its specified threshold, causing a hard shutdown of the node.

May also be shown as 80070301030101ff or 0x80070301030101ff

Severity: Error

Alert Category: Critical - Temperature

Serviceable: Yes

CIM Information: Prefix: PLAT and **ID:** 0524

SNMP Trap ID: 0

Automatically notify Support: No

User response: Complete the following steps until the problem is solved:

1. Check the Chassis Management Module or Flex System Manager event log for any fan- or cooling-related issues.
2. Make sure that the airflow at the front and rear of the chassis is not obstructed and that fillers are in place and correctly installed.
3. Make sure that the room temperature is within operating specifications.
4. Make sure that the microprocessor 1 heat sink is securely installed.
5. Make sure that the microprocessor 1 heat sink is installed correctly and the thermal material is correctly applied.
6. Replace microprocessor 1.

Related Links:

- "Removing a microprocessor and heat sink" on page 615
- "Installing a microprocessor and heat sink" on page 621

80070301-030201ff Sensor CPU 2 Overtemp has gone to Nonrecoverable state from a less severe state.

Explanation: The temperature of microprocessor 2 has exceeded its specified threshold, causing a hard shutdown of the compute node.

May also be shown as 80070301030201ff or 0x80070301030201ff

Severity: Error

Alert Category: Critical - Temperature

Serviceable: Yes

CIM Information: Prefix: PLAT and **ID:** 0524

SNMP Trap ID: 0

Automatically notify Support: No

User response: Complete the following steps until the problem is solved:

1. Check the Chassis Management Module or Flex System Manager event log for any fan- or cooling-related issues.
2. Make sure that the airflow at the front and rear of the chassis is not obstructed and that fillers are in place and correctly installed.
3. Make sure that the room temperature is within operating specifications.

4. Make sure that the microprocessor 2 heat sink is securely installed.
5. Make sure that the microprocessor 2 heat sink is installed correctly and the thermal material is correctly applied.
6. Replace microprocessor 2.

Related Links:

- "Removing a microprocessor and heat sink" on page 615
- "Installing a microprocessor and heat sink" on page 621

80070301-2c01ffff Sensor Mezz Exp 1 temp has transitioned to non-recoverable from a less severe state.

Explanation: The temperature of the I/O expansion adapter in I/O expansion connector 1 has exceeded its specified threshold. The compute node has attempted a soft shutdown.

May also be shown as 800703012c01ffff or 0x800703012c01ffff

Severity: Error

Alert Category: Critical - Temperature

Serviceable: Yes

CIM Information: Prefix: PLAT and **ID:** 0524

SNMP Trap ID: 0

Automatically notify Support: No

User response: Complete the following steps until the problem is solved:

1. Check the Chassis Management Module or Flex System Manager event log for any fan- or cooling-related issues.
2. Make sure that the airflow at the front and rear of the chassis is not obstructed and that fillers are in place and correctly installed.
3. Make sure that the room temperature is within operating specifications.
4. If there are no other thermal issues, replace the I/O expansion adapter.

Related Links:

- "Removing an I/O expansion adapter" on page 605
- "Installing an I/O expansion adapter" on page 606

80070301-2c02ffff Sensor Mezz Exp 2 temp has transitioned to non-recoverable from a less severe state.

Explanation: The temperature of the I/O expansion adapter in I/O expansion connector 2 has exceeded its specified threshold. The compute node has attempted a soft shutdown.

May also be shown as 800703012c02ffff or 0x800703012c02ffff

Severity: Error

Alert Category: Critical - Temperature

Serviceable: Yes

CIM Information: Prefix: PLAT and **ID:** 0524

SNMP Trap ID: 0

Automatically notify Support: No

User response: Complete the following steps until the problem is solved:

1. Check the Chassis Management Module or Flex System Manager event log for any fan- or cooling-related issues.
2. Make sure that the airflow at the front and rear of the chassis is not obstructed and that fillers are in place and correctly installed.
3. Make sure that the room temperature is within operating specifications.
4. If there are no other thermal issues, replace the I/O expansion adapter.

Related Links:

- "Removing an I/O expansion adapter" on page 605
- "Installing an I/O expansion adapter" on page 606

80070301-2c03ffff Sensor PEN MExp 3 Temp has transitioned to non-recoverable from a less severe state.

Explanation: The temperature of the PEN MEzzanine Expansion adapter in I/O expansion connector 3 has exceeded its specified threshold. The compute node has attempted a soft shutdown.

May also be shown as 800703012c03ffff or 0x800703012c03ffff

Severity: Error

Alert Category: Critical - Temperature

Serviceable: Yes

CIM Information: Prefix: PLAT and **ID:** 0524

SNMP Trap ID: 0

Automatically notify Support: No

User response: Complete the following steps until the problem is solved:

1. Check the Chassis Management Module or Flex System Manager event log for any fan- or cooling-related issues.
2. Make sure that the airflow at the front and rear of the chassis is not obstructed and that fillers are in place and correctly installed.
3. Make sure that the room temperature is within operating specifications.
4. If there are no other thermal issues, replace the I/O expansion adapter.

Related Links:

- "Removing an I/O expansion adapter" on page 605
- "Installing an I/O expansion adapter" on page 606

80070301-2c04ffff Sensor PEN MExp 4 Temp has transitioned to non-recoverable from a less severe state.

Explanation: The temperature of the PEN MEzzanine Expansion adapter in I/O expansion connector 4 has exceeded its specified threshold. The compute node has attempted a soft shutdown.

May also be shown as 800703012c04ffff or 0x800703012c04ffff

Severity: Error

Alert Category: Critical - Temperature

Serviceable: Yes

CIM Information: Prefix: PLAT and **ID:** 0524

SNMP Trap ID: 0

Automatically notify Support: No

User response: Complete the following steps until the problem is solved:

1. Check the Chassis Management Module or Flex System Manager event log for any fan- or cooling-related issues.
2. Make sure that the airflow at the front and rear of the chassis is not obstructed and that fillers are in place and correctly installed.
3. Make sure that the room temperature is within operating specifications.
4. If there are no other thermal issues, replace the I/O expansion adapter.

Related Links:

- "Removing an I/O expansion adapter" on page 605
- "Installing an I/O expansion adapter" on page 606

80070301-2d0101ff Sensor PCH Overtemp has transitioned to non-recoverable from a less severe state.

Explanation: A temperature has exceeded its specified threshold. The compute node will attempt a soft shutdown.

May also be shown as 800703012d0101ff or 0x800703012d0101ff

Severity: Error

Alert Category: Critical - Temperature

Serviceable: Yes

CIM Information: Prefix: PLAT and **ID:** 0524

SNMP Trap ID: 0

Automatically notify Support: No

User response: Complete the following steps until the problem is solved:

1. Check the Chassis Management Module or Flex System Manager event log for any fan- or cooling-related issues.
2. Make sure that the airflow at the front and rear of the chassis is not obstructed and that fillers are in place and correctly installed.
3. Make sure that the room temperature is within operating specifications.

80070301-3101ffff Sensor PCIE 1 Overtemp has transitioned to non-recoverable from a less severe state.

Explanation: Sensor PCIE 1 Overtemp has transitioned to critical from a less severe state. The compute node has attempted a soft shutdown.

May also be shown as 800703013101ffff or 0x800703013101ffff

Severity: Error

Alert Category: Critical - Temperature

Serviceable: Yes

CIM Information: Prefix: PLAT and **ID:** 0524

SNMP Trap ID: 0

Automatically notify Support: No

User response: Complete the following steps until the problem is solved:

1. Check the Chassis Management Module or Flex System Manager event log for any fan- or cooling-related issues.
2. Make sure that the airflow at the front and rear of the chassis is not obstructed and that fillers are in place and correctly installed.
3. Make sure that the room temperature is within operating specifications.
4. If there are no other thermal issues, replace the PCIe Card.

Related Links:

- "Removing an I/O expansion adapter" on page 605
- "Installing an I/O expansion adapter" on page 606

80070301-3102ffff Sensor PCIE 2 Overtemp has transitioned to non-recoverable from a less severe state.

Explanation: Sensor PCIE 2 Overtemp has transitioned to critical from a less severe state. The compute node has attempted a soft shutdown.

May also be shown as 800703013102ffff or 0x800703013102ffff

Severity: Error

Alert Category: Critical - Temperature

Serviceable: Yes

CIM Information: Prefix: PLAT and **ID:** 0524

SNMP Trap ID: 0

Automatically notify Support: No

User response: Complete the following steps until the problem is solved:

1. Check the Chassis Management Module or Flex System Manager event log for any fan- or cooling-related issues.
2. Make sure that the airflow at the front and rear of the chassis is not obstructed and that fillers are in place and correctly installed.
3. Make sure that the room temperature is within operating specifications.
4. If there are no other thermal issues, replace the PCIe Card.

Related Links:

- "Removing an I/O expansion adapter" on page 605
- "Installing an I/O expansion adapter" on page 606

80070301-3103ffff Sensor PCIE 3 Overtemp has transitioned to non-recoverable from a less severe state.

Explanation: Sensor PCIE 3 Overtemp has transitioned to critical from a less severe state. The compute node has attempted a soft shutdown.

May also be shown as 800703013103ffff or 0x800703013103ffff

Severity: Error

Alert Category: Critical - Temperature

Serviceable: Yes

CIM Information: **Prefix:** PLAT and **ID:** 0524

SNMP Trap ID: 0

Automatically notify Support: No

User response: Complete the following steps until the problem is solved:

1. Check the Chassis Management Module or Flex System Manager event log for any fan- or cooling-related issues.
2. Make sure that the airflow at the front and rear of the chassis is not obstructed and that fillers are in place and correctly installed.
3. Make sure that the room temperature is within operating specifications.
4. If there are no other thermal issues, replace the PCIe Card.

Related Links:

- "Removing an I/O expansion adapter" on page 605
- "Installing an I/O expansion adapter" on page 606

80070301-3104ffff Sensor PCIE 4 Overtemp has transitioned to non-recoverable from a less severe state.

Explanation: Sensor PCIE 4 Overtemp has transitioned to critical from a less severe state. The compute node has attempted a soft shutdown.

May also be shown as 800703013104ffff or 0x800703013104ffff

Severity: Error

Alert Category: Critical - Temperature

Serviceable: Yes

CIM Information: **Prefix:** PLAT and **ID:** 0524

SNMP Trap ID: 0

Automatically notify Support: No

User response: Complete the following steps until the problem is solved:

1. Check the Chassis Management Module or Flex System Manager event log for any fan- or cooling-related issues.

2. Make sure that the airflow at the front and rear of the chassis is not obstructed and that fillers are in place and correctly installed.
3. Make sure that the room temperature is within operating specifications.
4. If there are no other thermal issues, replace the PCIe Card.

Related Links:

- "Removing an I/O expansion adapter" on page 605
- "Installing an I/O expansion adapter" on page 606

80070301-370202ff Sensor PEN Inlet Over T has transitioned to non-recoverable from a less severe state.

Explanation: The PCIe Expansion Node Inlet temperature has exceeded its specified threshold. The compute node has attempted a soft shutdown.

May also be shown as 80070301370202ff or 0x80070301370202ff

Severity: Error

Alert Category: Critical - Temperature

Serviceable: Yes

CIM Information: Prefix: PLAT and **ID:** 0524

SNMP Trap ID: 0

Automatically notify Support: No

User response: Complete the following steps until the problem is solved:

1. Check the Chassis Management Module or Flex System Manager event log for any fan- or cooling-related issues.
2. Make sure that the airflow at the front and rear of the chassis is not obstructed and that fillers are in place and correctly installed.
3. Make sure that the room temperature is within operating specifications.

80070319-2201ffff Sensor S3 Resume Fail has transitioned to non-recoverable from a less severe state.

Explanation: The S3 Resume Fail sesor has transitioned to non-recoverable from less severe.

May also be shown as 800703192201ffff or 0x800703192201ffff

Severity: Error

Alert Category: Critical - Other

Serviceable: Yes

CIM Information: Prefix: PLAT and **ID:** 0524

SNMP Trap ID: 50

Automatically notify Support: No

User response: This is a UEFI detected event. The UEFI diagnostic code for this event can be found in the logged IMM message text. Please refer to the UEFI diagnostic code in the "UEFI diagnostic code" section of the Information Center for the appropriate user response.

Related Links:

- "Finding the UEFI diagnostic code" on page 521

80070401-2c01ffff Sensor Mezz Exp 1 temp has transitioned to non-critical from a more severe state.

Explanation: The previously high temperature of the I/O expansion adapter in I/O expansion connector 1 has returned to below its specified threshold.

May also be shown as 800704012c01ffff or 0x800704012c01ffff

Severity: Warning

Alert Category: Warning - Temperature

Serviceable: No

CIM Information: **Prefix:** PLAT and **ID:** 0526

SNMP Trap ID: 12

Automatically notify Support: No

User response: Information only; no action is required.

80070401-2c02ffff Sensor Mezz Exp 2 temp has transitioned to non-critical from a more severe state.

Explanation: The previously high temperature of the I/O expansion adapter in I/O expansion connector 2 has returned to below its specified threshold.

May also be shown as 800704012c02ffff or 0x800704012c02ffff

Severity: Warning

Alert Category: Warning - Temperature

Serviceable: No

CIM Information: **Prefix:** PLAT and **ID:** 0526

SNMP Trap ID: 12

Automatically notify Support: No

User response: Information only; no action is required.

80070401-2c03ffff Sensor PEN MExp 3 Temp has transitioned to non-critical from a more severe state.

Explanation: The previously high temperature of the PEN Mezzanine Expansion adapter in I/O expansion connector 3 has returned to below its specified threshold.

May also be shown as 800704012c03ffff or 0x800704012c03ffff

Severity: Warning

Alert Category: Warning - Temperature

Serviceable: No

CIM Information: **Prefix:** PLAT and **ID:** 0526

SNMP Trap ID: 12

Automatically notify Support: No

User response: Information only; no action is required.

80070401-2c04ffff Sensor PEN MExp 4 has transitioned to non-critical from a more severe state.

Explanation: The previously high temperature of the PEN Mezzanine Expansion adapter in I/O expansion connector 4 has returned to below its specified threshold.

May also be shown as 800704012c04ffff or 0x800704012c04ffff

Severity: Warning

Alert Category: Warning - Temperature

Serviceable: No

CIM Information: **Prefix:** PLAT and **ID:** 0526

SNMP Trap ID: 12

Automatically notify Support: No

User response: Information only; no action is required.

80070601-2c01ffff Sensor Mezz Exp 1 temp has transitioned to non-recoverable.

Explanation: The temperature of the I/O expansion adapter in I/O expansion connector 1 has exceeded its specified threshold. The compute node has attempted a soft shutdown.

May also be shown as 800706012c01ffff or 0x800706012c01ffff

Severity: Error

Alert Category: Critical - Temperature

Serviceable: Yes

CIM Information: Prefix: PLAT and **ID:** 0530

SNMP Trap ID: 0

Automatically notify Support: No

User response: Complete the following steps until the problem is solved:

1. Check the Chassis Management Module or Flex System Manager event log for any fan- or cooling-related issues.
2. Make sure that the airflow at the front and rear of the chassis is not obstructed and that fillers are in place and correctly installed.
3. Make sure that the room temperature is within operating specifications.
4. If there are no other thermal issues, replace the I/O expansion adapter.

80070601-2c02ffff Sensor Mezz Exp 2 temp has transitioned to non-recoverable.

Explanation: The temperature of the I/O expansion adapter in I/O expansion connector 2 has exceeded its specified threshold. The compute node has attempted a soft shutdown.

May also be shown as 800706012c02ffff or 0x800706012c02ffff

Severity: Error

Alert Category: Critical - Temperature

Serviceable: Yes

CIM Information: Prefix: PLAT and **ID:** 0530

SNMP Trap ID: 0

Automatically notify Support: No

User response: Complete the following steps until the problem is solved:

1. Check the Chassis Management Module or Flex System Manager event log for any fan- or cooling-related issues.
2. Make sure that the airflow at the front and rear of the chassis is not obstructed and that fillers are in place and correctly installed.
3. Make sure that the room temperature is within operating specifications.
4. If there are no other thermal issues, replace the I/O expansion adapter.

80070601-2c03ffff Sensor PEN MExp 3 Temp has transitioned to non-recoverable.

Explanation: The temperature of the PEN Mezzanine Expansion adapter in I/O expansion connector 3 has exceeded its specified threshold. The compute node has attempted a soft shutdown.

May also be shown as 800706012c03ffff or 0x800706012c03ffff

Severity: Error

Alert Category: Critical - Temperature

Serviceable: Yes

CIM Information: Prefix: PLAT and **ID:** 0530

SNMP Trap ID: 0

Automatically notify Support: No

User response: Complete the following steps until the problem is solved:

1. Check the Chassis Management Module or Flex System Manager event log for any fan- or cooling-related issues.
2. Make sure that the airflow at the front and rear of the chassis is not obstructed and that fillers are in place and correctly installed.
3. Make sure that the room temperature is within operating specifications.
4. If there are no other thermal issues, replace the I/O expansion adapter.

80070601-2c04ffff Sensor PEN MExp 4 Temp has transitioned to non-recoverable.

Explanation: The temperature of the PEN Mezzanine Expansion adapter in I/O expansion connector 4 has exceeded its specified threshold. The compute node has attempted a soft shutdown.

May also be shown as 800706012c04ffff or 0x800706012c04ffff

Severity: Error

Alert Category: Critical - Temperature

Serviceable: Yes

CIM Information: **Prefix:** PLAT and **ID:** 0530

SNMP Trap ID: 0

Automatically notify Support: No

User response: Complete the following steps until the problem is solved:

1. Check the Chassis Management Module or Flex System Manager event log for any fan- or cooling-related issues.
2. Make sure that the airflow at the front and rear of the chassis is not obstructed and that fillers are in place and correctly installed.
3. Make sure that the room temperature is within operating specifications.
4. If there are no other thermal issues, replace the I/O expansion adapter.

8007060f-2201ffff Sensor BOFM Config Err has transitioned to non-recoverable.

Explanation: BOFM Config Error has been detected.

May also be shown as 8007060f2201ffff or 0x8007060f2201ffff

Severity: Error

Alert Category: Critical - Other

Serviceable: Yes

CIM Information: **Prefix:** PLAT and **ID:** 0530

SNMP Trap ID: 50

Automatically notify Support: No

User response: This is a UEFI detected event. The UEFI diagnostic code for this event can be found in the logged IMM message text. Please refer to the UEFI diagnostic code in the "UEFI diagnostic code" section of the Information Center for the appropriate user response.

Related Links:

- “Finding the UEFI diagnostic code” on page 521

80070614-2201ffff Sensor TPM Phy Pres Set has transitioned to non-recoverable.

Explanation: The TPM Phy Pres Set Sensor has transitioned to non-recoverable.

May also be shown as 800706142201ffff or 0x800706142201ffff

Severity: Error

Alert Category: Critical - Other

Serviceable: Yes

CIM Information: **Prefix:** PLAT and **ID:** 0530

SNMP Trap ID: 50

Automatically notify Support: No

User response: This is a UEFI detected event. The UEFI diagnostic code for this event can be found in the logged IMM message text. Please refer to the UEFI diagnostic code in the "UEFI diagnostic code" section of the Information Center for the appropriate user response.

Related Links:

- "Finding the UEFI diagnostic code" on page 521

80080017-0f01ffff Device SAS BP has been removed from unit [PhysicalPackageElementName].

Explanation: The SAS backplane has been removed.

May also be shown as 800800170f01ffff or 0x800800170f01ffff

Severity: Info

Alert Category: System - Other

Serviceable: No

CIM Information: **Prefix:** PLAT and **ID:** 0537

SNMP Trap ID:

Automatically notify Support: No

User response: Install the SAS backplane.

8008010f-2101ffff Device [LogicalDeviceElementName] has been added.

Explanation: The physical presence jumper has been installed in the compute node.

May also be shown as 8008010f2101ffff or 0x8008010f2101ffff

Severity: Info

Alert Category: System - Other

Serviceable: No

CIM Information: **Prefix:** PLAT and **ID:** 0536

SNMP Trap ID:

Automatically notify Support: No

User response: Information only; no action is required.

80080128-2101ffff Device [LogicalDeviceElementName] has been added.

Explanation: The specified device has been installed in the compute node.

May also be shown as 800801282101ffff or 0x800801282101ffff

Severity: Info

Alert Category: System - Other

Serviceable: No

CIM Information: **Prefix:** PLAT and **ID:** 0536

SNMP Trap ID:

Automatically notify Support: No

User response: Information only; no action is required.

8009000c-0701ffff Device Performance Mode has been disabled.

Explanation: The user has switched from Performance mode to Acoustic mode.

May also be shown as 8009000c0701ffff or 0x8009000c0701ffff

Severity: Info

Alert Category: System - Other

Serviceable: No

CIM Information: Prefix: PLAT and **ID:** 0539

SNMP Trap ID:

Automatically notify Support: No

User response: Information only; no action is required.

8009010c-0701ffff Device Performance Mode has been enabled.

Explanation: The user has switched from Acoustic mode to Performance mode.

May also be shown as 8009010c0701ffff or 0x8009010c0701ffff

Severity: Info

Alert Category: System - Other

Serviceable: No

CIM Information: Prefix: PLAT and **ID:** 0538

SNMP Trap ID:

Automatically notify Support: No

User response: Information only; no action is required.

80090112-2101ffff Device [LogicalDeviceElementName] has been enabled.

Explanation: An IPMI or SNMP Account has been enabled.

May also be shown as 800901122101ffff or 0x800901122101ffff

Severity: Info

Alert Category: System - Other

Serviceable: No

CIM Information: Prefix: PLAT and **ID:** 0538

SNMP Trap ID:

Automatically notify Support: No

User response: Information only; no action required.

800b010c-2581ffff Redundancy Lost for Backup Memory has asserted.

Explanation: Redundancy lost for backup memory.

May also be shown as 800b010c2581ffff or 0x800b010c2581ffff

Severity: Error

Alert Category: Critical - Memory

Serviceable: Yes

CIM Information: **Prefix:** PLAT and **ID:** 0802

SNMP Trap ID: 41

Automatically notify Support: No

User response: This is a UEFI detected event. To find the UEFI diagnostic code for this event, in the information center, follow the instructions in "Finding the UEFI diagnostic code" under "UEFI diagnostic codes." Then, in the information center, open the topic for the UEFI diagnostic code and follow the instructions under "User response."

Related Links:

- "Finding the UEFI diagnostic code" on page 521

800b030c-2581ffff Non-redundant:Sufficient Resources from Redundancy Degraded or Fully Redundant for Backup Memory has asserted.

Explanation: Backup Memory has transitioned from Redundancy Degraded or Fully Redundant to Non-redundant.

May also be shown as 800b030c2581ffff or 0x800b030c2581ffff

Severity: Warning

Alert Category: Warning - Memory

Serviceable: Yes

CIM Information: **Prefix:** PLAT and **ID:** 0806

SNMP Trap ID: 43

Automatically notify Support: No

User response: This is a UEFI detected event. To find the UEFI diagnostic code for this event, in the information center, follow the instructions in "Finding the UEFI diagnostic code" under "UEFI diagnostic codes." Then, in the information center, open the topic for the UEFI diagnostic code and follow the instructions under "User response."

Related Links:

- "Finding the UEFI diagnostic code" on page 521

800b050c-2581ffff Non-redundant:Insufficient Resources for Backup Memory has asserted.

Explanation: This message is for the use case when a Redundancy Set has transitioned to Non-redundant:Insufficient Resources.

May also be shown as 800b050c2581ffff or 0x800b050c2581ffff

Severity: Error

Alert Category: Critical - Memory

Serviceable: Yes

CIM Information: **Prefix:** PLAT and **ID:** 0810

SNMP Trap ID: 41

Automatically notify Support: No

User response: This is a UEFI detected event. To find the UEFI diagnostic code for this event, in the information center, follow the instructions in "Finding the UEFI diagnostic code" under "UEFI diagnostic codes." Then, in the information center, open the topic for the UEFI diagnostic code and follow the instructions under "User response."

Related Links:

- "Finding the UEFI diagnostic code" on page 521

806f0007-0301ffff CPU 1 has Failed with IERR.

Explanation: A Processor Internal Error (IERR) Condition has been detected for CPU 1.

May also be shown as 806f00070301ffff or 0x806f00070301ffff

Severity: Error

Alert Category: Critical - CPU

Serviceable: Yes

CIM Information: Prefix: PLAT and **ID:** 0042

SNMP Trap ID: 40

Automatically notify Support: No

User response: This is a UEFI detected event. To find the UEFI diagnostic code for this event, in the information center, follow the instructions in "Finding the UEFI diagnostic code" under "UEFI diagnostic codes." Then, in the information center, open the topic for the UEFI diagnostic code and follow the instructions under "User response."

Related Links:

- “Finding the UEFI diagnostic code” on page 521

806f0007-0302ffff CPU 2 has Failed with IERR.

Explanation: A Processor Internal Error (IERR) Condition has been detected for CPU 2.

May also be shown as 806f00070302ffff or 0x806f00070302ffff

Severity: Error

Alert Category: Critical - CPU

Serviceable: Yes

CIM Information: Prefix: PLAT and **ID:** 0042

SNMP Trap ID: 40

Automatically notify Support: No

User response: This is a UEFI detected event. To find the UEFI diagnostic code for this event, in the information center, follow the instructions in "Finding the UEFI diagnostic code" under "UEFI diagnostic codes." Then, in the information center, open the topic for the UEFI diagnostic code and follow the instructions under "User response."

Related Links:

- “Finding the UEFI diagnostic code” on page 521

806f0007-2584ffff [ProcessorElementName] has Failed with IERR.

Explanation: This message is for the use case when an implementation has detected a Processor Failed - IERR Condition. (It might be All CPUs or One of CPUs as well).

May also be shown as 806f00072584ffff or 0x806f00072584ffff

Severity: Error

Alert Category: Critical - CPU

Serviceable: Yes

CIM Information: Prefix: PLAT and **ID:** 0042

SNMP Trap ID: 40

Automatically notify Support: No

User response: This is a UEFI detected event. To find the UEFI diagnostic code for this event, in the information center, follow the instructions in "Finding the UEFI diagnostic code" under "UEFI diagnostic codes." Then, in the information center, open the topic for the UEFI diagnostic code and follow the instructions under "User response."

Related Links:

- "Finding the UEFI diagnostic code" on page 521

806f0009-0701ffff [PowerSupplyElementName] has been turned off.

Explanation: The compute node has been powered off.

May also be shown as 806f00090701ffff or 0x806f00090701ffff

Severity: Info

Alert Category: System - Power Off

Serviceable: No

CIM Information: Prefix: PLAT and **ID:** 0106

SNMP Trap ID: 23

Automatically notify Support: No

User response: Information only; no action is required.

806f000d-0400ffff The Drive Drive 0 has been added.

Explanation: Hard disk drive 0 has been installed.

May also be shown as 806f000d0400ffff or 0x806f000d0400ffff

Severity: Info

Alert Category: Critical - Hard Disk drive

Serviceable: No

CIM Information: Prefix: PLAT and **ID:** 0162

SNMP Trap ID: 5

Automatically notify Support: No

User response: Information only; no action is required.

806f000d-0401ffff The Drive Drive 1 has been added.

Explanation: Hard disk drive 1 has been installed.

May also be shown as 806f000d0401ffff or 0x806f000d0401ffff

Severity: Info

Alert Category: Critical - Hard Disk drive

Serviceable: No

CIM Information: Prefix: PLAT and **ID:** 0162

SNMP Trap ID: 5

Automatically notify Support: No

User response: Information only; no action is required.

806f000d-0402ffff The Drive Drive 2 has been added.

Explanation: Hard disk drive 2 has been installed.

May also be shown as 806f000d0402ffff or 0x806f000d0402ffff

Severity: Info

Alert Category: Critical - Hard Disk drive

Serviceable: No

CIM Information: Prefix: PLAT and **ID:** 0162

SNMP Trap ID: 5

Automatically notify Support: No

User response: Information only; no action is required.

806f000d-0403ffff The Drive Drive 3 has been added.

Explanation: Hard disk drive 3 has been installed.

May also be shown as 806f000d0403ffff or 0x806f000d0403ffff

Severity: Info

Alert Category: Critical - Hard Disk drive

Serviceable: No

CIM Information: Prefix: PLAT and **ID:** 0162

SNMP Trap ID: 5

Automatically notify Support: No

User response: Information only; no action is required.

806f000d-0404ffff The Drive Drive 4 has been added.

Explanation: Hard disk drive 4 has been installed.

May also be shown as 806f000d0404ffff or 0x806f000d0404ffff

Severity: Info

Alert Category: Critical - Hard Disk drive

Serviceable: No

CIM Information: Prefix: PLAT and **ID:** 0162

SNMP Trap ID: 5

Automatically notify Support: No

User response: Information only; no action is required.

806f000d-0405ffff The Drive Drive 5 has been added.

Explanation: Hard disk drive 5 has been installed.

May also be shown as 806f000d0405ffff or 0x806f000d0405ffff

Severity: Info

Alert Category: Critical - Hard Disk drive

Serviceable: No

CIM Information: Prefix: PLAT and **ID:** 0162

SNMP Trap ID: 5

Automatically notify Support: No

User response: Information only; no action is required.

806f000d-0406ffff The Drive Drive 6 has been added.

Explanation: Hard disk drive 6 has been installed.

May also be shown as 806f000d0406ffff or 0x806f000d0406ffff

Severity: Info

Alert Category: Critical - Hard Disk drive

Serviceable: No

CIM Information: Prefix: PLAT and **ID:** 0162

SNMP Trap ID: 5

Automatically notify Support: No

User response: Information only; no action is required.

806f000d-0407ffff The Drive Drive 7 has been added.

Explanation: Hard disk drive 7 has been installed.

May also be shown as 806f000d0407ffff or 0x806f000d0407ffff

Severity: Info

Alert Category: Critical - Hard Disk drive

Serviceable: No

CIM Information: Prefix: PLAT and **ID:** 0162

SNMP Trap ID: 5

Automatically notify Support: No

User response: Information only; no action is required.

806f000f-220100ff The System [ComputerSystemElementName] encountered a POST Error.

Explanation: This message is for the use case when an implementation has detected a Post Error.

May also be shown as 806f000f220100ff or 0x806f000f220100ff

Severity: Error

Alert Category: Critical - Other

Serviceable: Yes

CIM Information: Prefix: PLAT and **ID:** 0184

SNMP Trap ID: 50

Automatically notify Support: No

User response: This is a UEFI detected event. To find the UEFI diagnostic code for this event, in the information center, follow the instructions in "Finding the UEFI diagnostic code" under "UEFI diagnostic codes." Then, in the information center, open the topic for the UEFI diagnostic code and follow the instructions under "User response."

Related Links:

- “Finding the UEFI diagnostic code” on page 521

806f000f-220101ff The System [ComputerSystemElementName] has detected no memory in the system.

Explanation: No memory was detected in the system.

May also be shown as 806f000f220101ff or 0x806f000f220101ff

Severity: Error

Alert Category: Critical - Memory

Serviceable: Yes

CIM Information: **Prefix:** PLAT and **ID:** 0794

SNMP Trap ID: 41

Automatically notify Support: No

User response: This is a UEFI detected event. To find the UEFI diagnostic code for this event, in the information center, follow the instructions in "Finding the UEFI diagnostic code" under "UEFI diagnostic codes." Then, in the information center, open the topic for the UEFI diagnostic code and follow the instructions under "User response."

Related Links:

- “Finding the UEFI diagnostic code” on page 521

806f000f-220102ff Subsystem [MemoryElementName] has insufficient memory for operation.

Explanation: This message is for the use case when an implementation has detected that the usable Memory is insufficient for operation.

May also be shown as 806f000f220102ff or 0x806f000f220102ff

Severity: Error

Alert Category: Critical - Memory

Serviceable: Yes

CIM Information: **Prefix:** PLAT and **ID:** 0132

SNMP Trap ID: 41

Automatically notify Support: No

User response: This is a UEFI detected event. To find the UEFI diagnostic code for this event, in the information center, follow the instructions in "Finding the UEFI diagnostic code" under "UEFI diagnostic codes." Then, in the information center, open the topic for the UEFI diagnostic code and follow the instructions under "User response."

Related Links:

- “Finding the UEFI diagnostic code” on page 521

806f000f-220103ff The System [ComputerSystemElementName] encountered firmware error - unrecoverable boot device failure.

Explanation: This message is for the use case when an implementation has detected that System Firmware Error Unrecoverable boot device failure has occurred.

May also be shown as 806f000f220103ff or 0x806f000f220103ff

Severity: Error

Alert Category: Critical - Hard Disk drive

Serviceable: Yes

CIM Information: **Prefix:** PLAT and **ID:** 0770

SNMP Trap ID: 5

Automatically notify Support: No

User response: ABR Status : Firmware Error : This is a UEFI detected event. To find the UEFI diagnostic code for this event, in the information center, follow the instructions in "Finding the UEFI diagnostic code" under "UEFI diagnostic codes." Then, in the information center, open the topic for the UEFI diagnostic code and follow the instructions under "User response."

Related Links:

- “Finding the UEFI diagnostic code” on page 521

806f000f-220104ff The System [ComputerSystemElementName]has encountered a motherboard failure.

Explanation: This message is for the use case when an implementation has detected that a fatal motherboard failure in the system. ABR Status. Firmware Error.

May also be shown as 806f000f220104ff or 0x806f000f220104ff

Severity: Error

Alert Category: Critical - Other

Serviceable: Yes

CIM Information: Prefix: PLAT and **ID:** 0795

SNMP Trap ID: 50

Automatically notify Support: No

User response: This is a UEFI detected event. To find the UEFI diagnostic code for this event, in the information center, follow the instructions in "Finding the UEFI diagnostic code" under "UEFI diagnostic codes." Then, in the information center, open the topic for the UEFI diagnostic code and follow the instructions under "User response."

Related Links:

- "Finding the UEFI diagnostic code" on page 521

806f000f-220107ff The System [ComputerSystemElementName] encountered firmware error - unrecoverable keyboard failure.

Explanation: This message is for the use case when an implementation has detected that System Firmware Error Unrecoverable Keyboard failure has occurred. ABR Status. Firmware Error.

May also be shown as 806f000f220107ff or 0x806f000f220107ff

Severity: Error

Alert Category: Critical - Other

Serviceable: Yes

CIM Information: Prefix: PLAT and **ID:** 0764

SNMP Trap ID: 50

Automatically notify Support: No

User response: This is a UEFI detected event. To find the UEFI diagnostic code for this event, in the information center, follow the instructions in "Finding the UEFI diagnostic code" under "UEFI diagnostic codes." Then, in the information center, open the topic for the UEFI diagnostic code and follow the instructions under "User response."

Related Links:

- "Finding the UEFI diagnostic code" on page 521

806f000f-22010aff The System [ComputerSystemElementName] encountered firmware error - no video device detected.

Explanation: This message is for the use case when an implementation has detected that System Firmware Error No video device detected has occurred. ABR Status. Firmware Error.

May also be shown as 806f000f22010aff or 0x806f000f22010aff

Severity: Error

Alert Category: Critical - Other

Serviceable: Yes

CIM Information: Prefix: PLAT and **ID:** 0766

SNMP Trap ID: 50

Automatically notify Support: No

User response: This is a UEFI detected event. To find the UEFI diagnostic code for this event, in the information center, follow the instructions in "Finding the UEFI diagnostic code" under "UEFI diagnostic codes." Then, in the information center, open the topic for the UEFI diagnostic code and follow the instructions under "User response."

Related Links:

- "Finding the UEFI diagnostic code" on page 521

806f000f-22010bff Firmware BIOS (ROM) corruption was detected on system [ComputerSystemElementName] during POST.

Explanation: Firmware BIOS (ROM) corruption was detected on the system during POST. ABR Status. Firmware Error.

May also be shown as 806f000f22010bff or 0x806f000f22010bff

Severity: Error

Alert Category: Critical - Other

Serviceable: Yes

CIM Information: Prefix: PLAT and **ID:** 0850

SNMP Trap ID: 50

Automatically notify Support: No

User response: This is a UEFI detected event. To find the UEFI diagnostic code for this event, in the information center, follow the instructions in "Finding the UEFI diagnostic code" under "UEFI diagnostic codes." Then, in the information center, open the topic for the UEFI diagnostic code and follow the instructions under "User response."

Related Links:

- "Finding the UEFI diagnostic code" on page 521

806f000f-22010cff CPU voltage mismatch detected on [ProcessorElementName].

Explanation: This message is for the use case when an implementation has detected a CPU voltage mismatch with the socket voltage. ABR Status. Firmware Error.

May also be shown as 806f000f22010cff or 0x806f000f22010cff

Severity: Error

Alert Category: Critical - CPU

Serviceable: Yes

CIM Information: Prefix: PLAT and **ID:** 0050

SNMP Trap ID: 40

Automatically notify Support: No

User response: This is a UEFI detected event. To find the UEFI diagnostic code for this event, in the information center, follow the instructions in "Finding the UEFI diagnostic code" under "UEFI diagnostic codes." Then, in the information center, open the topic for the UEFI diagnostic code and follow the instructions under "User response."

Related Links:

- "Finding the UEFI diagnostic code" on page 521

806f000f-2201ffff The System [ComputerSystemElementName] encountered a POST Error.

Explanation: This message is for the use case when an implementation has detected a Post Error.

May also be shown as 806f000f2201ffff or 0x806f000f2201ffff

Severity: Error

Alert Category: Critical - Other

Serviceable: Yes

CIM Information: Prefix: PLAT and **ID:** 0184

SNMP Trap ID: 50

Automatically notify Support: No

User response: This is a UEFI detected event. To find the UEFI diagnostic code for this event, in the information center, follow the instructions in "Finding the UEFI diagnostic code" under "UEFI diagnostic codes." Then, in the information center, open the topic for the UEFI diagnostic code and follow the instructions under "User response."

Related Links:

- "Finding the UEFI diagnostic code" on page 521

806f0013-1701ffff A diagnostic interrupt has occurred on system [ComputerSystemElementName].

Explanation: The user has pressed the NMI button, or the NMI button has malfunctioned.

May also be shown as 806f00131701ffff or 0x806f00131701ffff

Severity: Error

Alert Category: Critical - Other

Serviceable: Yes

CIM Information: Prefix: PLAT and **ID:** 0222

SNMP Trap ID: 50

Automatically notify Support: No

User response: If the NMI button on the operator information panel has not been pressed, complete the following steps:

1. Make sure that the NMI button is not pressed.
2. Replace the system board.

806f001e-2201ffff No bootable media available for system [ComputerSystemElementName].

Explanation: No boot device has been detected in the system.

May also be shown as 806f001e2201ffff or 0x806f001e2201ffff

Severity: Info

Alert Category: System - Other

Serviceable: No

CIM Information: Prefix: PLAT and **ID:** 0286

SNMP Trap ID:

Automatically notify Support: No

User response: Please install and configure a boot media, and attempt to power on and boot the server, again.

806f0021-22010900 Fault in slot [PhysicalConnectorSystemElementName] on system [ComputerSystemElementName].

Explanation: This message is for the use case when an implementation has detected a Fault in a slot. No Op ROM Space.

May also be shown as 806f002122010900 or 0x806f002122010900

Severity: Error

Alert Category: Critical - Other

Serviceable: Yes

CIM Information: **Prefix:** PLAT and **ID:** 0330

SNMP Trap ID: 50

Automatically notify Support: Yes

User response: This is a UEFI detected event. To find the UEFI diagnostic code for this event, in the information center, follow the instructions in "Finding the UEFI diagnostic code" under "UEFI diagnostic codes." Then, in the information center, open the topic for the UEFI diagnostic code and follow the instructions under "User response."

Related Links:

- "Finding the UEFI diagnostic code" on page 521

806f0021-22010901 Fault in slot [PhysicalConnectorSystemElementName] on system [ComputerSystemElementName].

Explanation: This message is for the use case when an implementation has detected a Fault in a slot. No Op ROM Space.

May also be shown as 806f002122010901 or 0x806f002122010901

Severity: Error

Alert Category: Critical - Other

Serviceable: Yes

CIM Information: **Prefix:** PLAT and **ID:** 0330

SNMP Trap ID: 50

Automatically notify Support: Yes

User response: This is a UEFI detected event. To find the UEFI diagnostic code for this event, in the information center, follow the instructions in "Finding the UEFI diagnostic code" under "UEFI diagnostic codes." Then, in the information center, open the topic for the UEFI diagnostic code and follow the instructions under "User response."

Related Links:

- "Finding the UEFI diagnostic code" on page 521

806f0021-22010902 Fault in slot [PhysicalConnectorSystemElementName] on system [ComputerSystemElementName].

Explanation: This message is for the use case when an implementation has detected a Fault in a slot. No Op ROM Space.

May also be shown as 806f002122010902 or 0x806f002122010902

Severity: Error

Alert Category: Critical - Other

Serviceable: Yes

CIM Information: **Prefix:** PLAT and **ID:** 0330

SNMP Trap ID: 50

Automatically notify Support: Yes

User response: This is a UEFI detected event. To find the UEFI diagnostic code for this event, in the information center, follow the instructions in "Finding the UEFI diagnostic code" under "UEFI diagnostic codes." Then, in the information center, open the topic for the UEFI diagnostic code and follow the instructions under "User response."

Related Links:

- "Finding the UEFI diagnostic code" on page 521

806f0021-22010903 Fault in slot [PhysicalConnectorSystemElementName] on system [ComputerSystemElementName].

Explanation: This message is for the use case when an implementation has detected a Fault in a slot. No Op ROM Space.

May also be shown as 806f002122010903 or 0x806f002122010903

Severity: Error

Alert Category: Critical - Other

Serviceable: Yes

CIM Information: Prefix: PLAT and **ID:** 0330

SNMP Trap ID: 50

Automatically notify Support: Yes

User response: This is a UEFI detected event. To find the UEFI diagnostic code for this event, in the information center, follow the instructions in "Finding the UEFI diagnostic code" under "UEFI diagnostic codes." Then, in the information center, open the topic for the UEFI diagnostic code and follow the instructions under "User response."

Related Links:

• "Finding the UEFI diagnostic code" on page 521

806f0021-22010904 Fault in slot [PhysicalConnectorSystemElementName] on system [ComputerSystemElementName].

Explanation: This message is for the use case when an implementation has detected a Fault in a slot. No Op ROM Space.

May also be shown as 806f002122010904 or 0x806f002122010904

Severity: Error

Alert Category: Critical - Other

Serviceable: Yes

CIM Information: Prefix: PLAT and **ID:** 0330

SNMP Trap ID: 50

Automatically notify Support: Yes

User response: This is a UEFI detected event. To find the UEFI diagnostic code for this event, in the information center, follow the instructions in "Finding the UEFI diagnostic code" under "UEFI diagnostic codes." Then, in the information center, open the topic for the UEFI diagnostic code and follow the instructions under "User response."

Related Links:

• "Finding the UEFI diagnostic code" on page 521

806f0021-25820900 Fault in slot [PhysicalConnectorSystemElementName] on system [ComputerSystemElementName].

Explanation: This message is for the use case when an implementation has detected a Fault in a slot.

May also be shown as 806f002125820900 or 0x806f002125820900

Severity: Error

Alert Category: Critical - Other

Serviceable: Yes

CIM Information: Prefix: PLAT and **ID:** 0330

SNMP Trap ID: 50

Automatically notify Support: Yes

User response: This is a UEFI detected event. To find the UEFI diagnostic code for this event, in the information center, follow the instructions in "Finding the UEFI diagnostic code" under "UEFI diagnostic codes." Then, in the information center, open the topic for the UEFI diagnostic code and follow the instructions under "User response."

Related Links:

• "Finding the UEFI diagnostic code" on page 521

806f0021-25820901 Fault in slot [PhysicalConnectorSystemElementName] on system [ComputerSystemElementName].

Explanation: This message is for the use case when an implementation has detected a Fault in a slot.

May also be shown as 806f002125820901 or 0x806f002125820901

Severity: Error

Alert Category: Critical - Other

Serviceable: Yes

CIM Information: Prefix: PLAT and **ID:** 0330

SNMP Trap ID: 50

Automatically notify Support: Yes

User response: This is a UEFI detected event. To find the UEFI diagnostic code for this event, in the information center, follow the instructions in "Finding the UEFI diagnostic code" under "UEFI diagnostic codes." Then, in the information center, open the topic for the UEFI diagnostic code and follow the instructions under "User response."

Related Links:

• "Finding the UEFI diagnostic code" on page 521

806f0021-25820902 Fault in slot [PhysicalConnectorSystemElementName] on system [ComputerSystemElementName].

Explanation: This message is for the use case when an implementation has detected a Fault in a slot.

May also be shown as 806f002125820902 or 0x806f002125820902

Severity: Error

Alert Category: Critical - Other

Serviceable: Yes

CIM Information: Prefix: PLAT and **ID:** 0330

SNMP Trap ID: 50

Automatically notify Support: Yes

User response: This is a UEFI detected event. To find the UEFI diagnostic code for this event, in the information center, follow the instructions in "Finding the UEFI diagnostic code" under "UEFI diagnostic codes." Then, in the information center, open the topic for the UEFI diagnostic code and follow the instructions under "User response."

Related Links:

• "Finding the UEFI diagnostic code" on page 521

806f0021-25820903 Fault in slot [PhysicalConnectorSystemElementName] on system [ComputerSystemElementName].

Explanation: This message is for the use case when an implementation has detected a Fault in a slot.

May also be shown as 806f002125820903 or 0x806f002125820903

Severity: Error

Alert Category: Critical - Other

Serviceable: Yes

CIM Information: Prefix: PLAT and **ID:** 0330

SNMP Trap ID: 50

Automatically notify Support: Yes

User response: This is a UEFI detected event. To find the UEFI diagnostic code for this event, in the information center, follow the instructions in "Finding the UEFI diagnostic code" under "UEFI diagnostic codes." Then, in the information center, open the topic for the UEFI diagnostic code and follow the instructions under "User response."

Related Links:

• "Finding the UEFI diagnostic code" on page 521

806f0021-2582ffff Fault in slot [PhysicalConnectorSystemElementName] on system [ComputerSystemElementName].

Explanation: This message is for the use case when an implementation has detected a Fault in a slot.

May also be shown as 806f00212582ffff or 0x806f00212582ffff

Severity: Error

Alert Category: Critical - Other

Serviceable: Yes

CIM Information: Prefix: PLAT and **ID:** 0330

SNMP Trap ID: 50

Automatically notify Support: Yes

User response: This is a UEFI detected event. To find the UEFI diagnostic code for this event, in the information center, follow the instructions in "Finding the UEFI diagnostic code" under "UEFI diagnostic codes." Then, in the information center, open the topic for the UEFI diagnostic code and follow the instructions under "User response."

Related Links:

• "Finding the UEFI diagnostic code" on page 521

806f0023-2101ffff Watchdog Timer expired for IPMI Watchdog.

Explanation: The IPMI watchdog timer has expired.

May also be shown as 806f00232101ffff or 0x806f00232101ffff

Severity: Info

Alert Category: System - Other

Serviceable: No

CIM Information: Prefix: PLAT and **ID:** 0368

SNMP Trap ID:

Automatically notify Support: No

User response: Information only; no action is required.

806f0028-2101ffff Sensor TPM Card Failures is unavailable or degraded on management system [ComputerSystemElementName].

Explanation: TPM initialization or start up commands have failed.

May also be shown as 806f00282101ffff or 0x806f00282101ffff

Severity: Warning

Alert Category: Warning - Other

Serviceable: Yes

CIM Information: Prefix: PLAT and **ID:** 0398

SNMP Trap ID: 60

Automatically notify Support: No

User response:

1. Reboot the system.
2. If error persists, or boot is unsuccessful, Replace the system board.

Related Links:

- "Removing the system-board assembly" on page 631
- "Installing the system-board assembly" on page 633

806f0107-0301ffff An over-temperature condition has been detected on [ProcessorElementName].

Explanation: The temperature of microprocessor 1 has exceeded the critical level, causing a hard shutdown of the compute node.

May also be shown as 806f01070301ffff or 0x806f01070301ffff

Severity: Error

Alert Category: Critical - Temperature

Serviceable: Yes

CIM Information: Prefix: PLAT and **ID:** 0036

SNMP Trap ID: 0

Automatically notify Support: No

User response: Complete the following steps until the problem is solved:

1. Check the Chassis Management Module or Flex System Manager event log for any fan- or cooling-related issues.
2. Make sure that the airflow at the front and rear of the chassis is not obstructed and that fillers are in place and correctly installed.
3. Make sure that the room temperature is within operating specifications.
4. Make sure that the microprocessor 1 heat sink is securely installed.
5. Make sure that the microprocessor 1 heat sink is installed correctly and the thermal material is correctly applied.
6. Replace microprocessor 1.

Related Links:

- "Removing a microprocessor and heat sink" on page 615
- "Installing a microprocessor and heat sink" on page 621

806f0107-0302ffff An over-temperature condition has been detected on [ProcessorElementName].

Explanation: The temperature of microprocessor 2 has exceeded the critical level, causing a hard shutdown of the compute node.

May also be shown as 806f01070302ffff or 0x806f01070302ffff

Severity: Error

Alert Category: Critical - Temperature

Serviceable: Yes

CIM Information: Prefix: PLAT and **ID:** 0036

SNMP Trap ID: 0

Automatically notify Support: No

User response: Complete the following steps until the problem is solved:

1. Check the Chassis Management Module or Flex System Manager event log for any fan- or cooling-related issues.
2. Make sure that the airflow at the front and rear of the chassis is not obstructed and that fillers are in place and correctly installed.
3. Make sure that the room temperature is within operating specifications.
4. Make sure that the microprocessor 2 heat sink is securely installed.
5. Make sure that the microprocessor 2 heat sink is installed correctly and the thermal material is correctly applied.
6. Replace microprocessor 2.

Related Links:

- "Removing a microprocessor and heat sink" on page 615
- "Installing a microprocessor and heat sink" on page 621

806f0107-2584ffff An over-temperature condition has been detected on [ProcessorElementName].

Explanation: The temperature of the specified microprocessor has exceeded its specified threshold.

May also be shown as 806f01072584ffff or 0x806f01072584ffff

Severity: Error

Alert Category: Critical - Temperature

Serviceable: Yes

CIM Information: Prefix: PLAT and **ID:** 0036

SNMP Trap ID: 0

Automatically notify Support: No

User response: Complete the following steps until the problem is solved:

1. Check the Chassis Management Module or Flex System Manager event log for any fan- or cooling-related issues.
2. Make sure that the airflow at the front and rear of the chassis is not obstructed and that fillers are in place and correctly installed.
3. Make sure that the room temperature is within operating specifications.
4. Make sure that the heat sink for the specified microprocessor is securely installed.
5. Make sure that the heat sink for the specified microprocessor is installed correctly and the thermal material is correctly applied.
6. Replace the specified microprocessor.

Related Links:

- "Removing a microprocessor and heat sink" on page 615
- "Installing a microprocessor and heat sink" on page 621

806f0109-0701ffff [PowerSupplyElementName] has been Power Cycled.

Explanation: The compute node has been powered off and powered on.

May also be shown as 806f01090701ffff or 0x806f01090701ffff

Severity: Info

Alert Category: System - Other

Serviceable: No

CIM Information: Prefix: PLAT and **ID:** 0108

SNMP Trap ID:

Automatically notify Support: No

User response: Information only; no action is required.

806f010c-2001ffff Uncorrectable error detected for DIMM 1 on Subsystem [MemoryElementName].

Explanation: This message is for the use case when an implementation has detected a Memory uncorrectable error.

May also be shown as 806f010c2001ffff or 0x806f010c2001ffff

Severity: Error

Alert Category: Critical - Memory

Serviceable: Yes

CIM Information: Prefix: PLAT and **ID:** 0138

SNMP Trap ID: 41

Automatically notify Support: Yes

User response: This is a UEFI detected event. To find the UEFI diagnostic code for this event, in the information center, follow the instructions in "Finding the UEFI diagnostic code" under "UEFI diagnostic codes." Then, in the information center, open the topic for the UEFI diagnostic code and follow the instructions under "User response."

Related Links:

- “Finding the UEFI diagnostic code” on page 521

806f010c-2002ffff Uncorrectable error detected for DIMM 2 on Subsystem [MemoryElementName].

Explanation: This message is for the use case when an implementation has detected a Memory uncorrectable error.

May also be shown as 806f010c2002ffff or 0x806f010c2002ffff

Severity: Error

Alert Category: Critical - Memory

Serviceable: Yes

CIM Information: Prefix: PLAT and **ID:** 0138

SNMP Trap ID: 41

Automatically notify Support: Yes

User response: This is a UEFI detected event. To find the UEFI diagnostic code for this event, in the information center, follow the instructions in "Finding the UEFI diagnostic code" under "UEFI diagnostic codes." Then, in the information center, open the topic for the UEFI diagnostic code and follow the instructions under "User response."

Related Links:

- “Finding the UEFI diagnostic code” on page 521

806f010c-2003ffff Uncorrectable error detected for DIMM 3 on Subsystem [MemoryElementName].

Explanation: This message is for the use case when an implementation has detected a Memory uncorrectable error.

May also be shown as 806f010c2003ffff or 0x806f010c2003ffff

Severity: Error

Alert Category: Critical - Memory

Serviceable: Yes

CIM Information: Prefix: PLAT and **ID:** 0138

SNMP Trap ID: 41

Automatically notify Support: Yes

User response: This is a UEFI detected event. To find the UEFI diagnostic code for this event, in the information center, follow the instructions in "Finding the UEFI diagnostic code" under "UEFI diagnostic codes." Then, in the information center, open the topic for the UEFI diagnostic code and follow the instructions under "User response."

Related Links:

- “Finding the UEFI diagnostic code” on page 521

806f010c-2004ffff Uncorrectable error detected for DIMM 4 on Subsystem [MemoryElementName].

Explanation: This message is for the use case when an implementation has detected a Memory uncorrectable error.

May also be shown as 806f010c2004ffff or 0x806f010c2004ffff

Severity: Error

Alert Category: Critical - Memory

Serviceable: Yes

CIM Information: Prefix: PLAT and **ID:** 0138

SNMP Trap ID: 41

Automatically notify Support: Yes

User response: This is a UEFI detected event. To find the UEFI diagnostic code for this event, in the information center, follow the instructions in "Finding the UEFI diagnostic code" under "UEFI diagnostic codes." Then, in the information center, open the topic for the UEFI diagnostic code and follow the instructions under "User response."

Related Links:

- “Finding the UEFI diagnostic code” on page 521

806f010c-2005ffff Uncorrectable error detected for DIMM 5 on Subsystem [MemoryElementName].

Explanation: This message is for the use case when an implementation has detected a Memory uncorrectable error.

May also be shown as 806f010c2005ffff or 0x806f010c2005ffff

Severity: Error

Alert Category: Critical - Memory

Serviceable: Yes

CIM Information: Prefix: PLAT and **ID:** 0138

SNMP Trap ID: 41

Automatically notify Support: Yes

User response: This is a UEFI detected event. To find the UEFI diagnostic code for this event, in the information center, follow the instructions in "Finding the UEFI diagnostic code" under "UEFI diagnostic codes." Then, in the information center, open the topic for the UEFI diagnostic code and follow the instructions under "User response."

Related Links:

- “Finding the UEFI diagnostic code” on page 521

806f010c-2006ffff Uncorrectable error detected for DIMM 6 on Subsystem [MemoryElementName].

Explanation: This message is for the use case when an implementation has detected a Memory uncorrectable error.

May also be shown as 806f010c2006ffff or 0x806f010c2006ffff

Severity: Error

Alert Category: Critical - Memory

Serviceable: Yes

CIM Information: Prefix: PLAT and **ID:** 0138

SNMP Trap ID: 41

Automatically notify Support: Yes

User response: This is a UEFI detected event. To find the UEFI diagnostic code for this event, in the information center, follow the instructions in "Finding the UEFI diagnostic code" under "UEFI diagnostic codes." Then, in the

information center, open the topic for the UEFI diagnostic code and follow the instructions under "User response."

Related Links:

- “Finding the UEFI diagnostic code” on page 521

806f010c-2007ffff Uncorrectable error detected for DIMM 7 on Subsystem [MemoryElementName].

Explanation: This message is for the use case when an implementation has detected a Memory uncorrectable error.

May also be shown as 806f010c2007ffff or 0x806f010c2007ffff

Severity: Error

Alert Category: Critical - Memory

Serviceable: Yes

CIM Information: Prefix: PLAT and **ID:** 0138

SNMP Trap ID: 41

Automatically notify Support: Yes

User response: This is a UEFI detected event. To find the UEFI diagnostic code for this event, in the information center, follow the instructions in "Finding the UEFI diagnostic code" under "UEFI diagnostic codes." Then, in the information center, open the topic for the UEFI diagnostic code and follow the instructions under "User response."

Related Links:

- “Finding the UEFI diagnostic code” on page 521

806f010c-2008ffff Uncorrectable error detected for DIMM 8 on Subsystem [MemoryElementName].

Explanation: This message is for the use case when an implementation has detected a Memory uncorrectable error.

May also be shown as 806f010c2008ffff or 0x806f010c2008ffff

Severity: Error

Alert Category: Critical - Memory

Serviceable: Yes

CIM Information: Prefix: PLAT and **ID:** 0138

SNMP Trap ID: 41

Automatically notify Support: Yes

User response: This is a UEFI detected event. To find the UEFI diagnostic code for this event, in the information center, follow the instructions in "Finding the UEFI diagnostic code" under "UEFI diagnostic codes." Then, in the information center, open the topic for the UEFI diagnostic code and follow the instructions under "User response."

Related Links:

- “Finding the UEFI diagnostic code” on page 521

806f010c-2009ffff Uncorrectable error detected for DIMM 9 on Subsystem [MemoryElementName].

Explanation: This message is for the use case when an implementation has detected a Memory uncorrectable error.

May also be shown as 806f010c2009ffff or 0x806f010c2009ffff

Severity: Error

Alert Category: Critical - Memory

Serviceable: Yes

CIM Information: Prefix: PLAT and **ID:** 0138

SNMP Trap ID: 41

Automatically notify Support: Yes

User response: This is a UEFI detected event. To find the UEFI diagnostic code for this event, in the information center, follow the instructions in "Finding the UEFI diagnostic code" under "UEFI diagnostic codes." Then, in the information center, open the topic for the UEFI diagnostic code and follow the instructions under "User response."

Related Links:

- "Finding the UEFI diagnostic code" on page 521

806f010c-200affff Uncorrectable error detected for DIMM 10 on Subsystem [MemoryElementName].

Explanation: This message is for the use case when an implementation has detected a Memory uncorrectable error.

May also be shown as 806f010c200affff or 0x806f010c200affff

Severity: Error

Alert Category: Critical - Memory

Serviceable: Yes

CIM Information: Prefix: PLAT and **ID:** 0138

SNMP Trap ID: 41

Automatically notify Support: Yes

User response: This is a UEFI detected event. To find the UEFI diagnostic code for this event, in the information center, follow the instructions in "Finding the UEFI diagnostic code" under "UEFI diagnostic codes." Then, in the information center, open the topic for the UEFI diagnostic code and follow the instructions under "User response."

Related Links:

- "Finding the UEFI diagnostic code" on page 521

806f010c-200bffff Uncorrectable error detected for DIMM 11 on Subsystem [MemoryElementName].

Explanation: This message is for the use case when an implementation has detected a Memory uncorrectable error.

May also be shown as 806f010c200bffff or 0x806f010c200bffff

Severity: Error

Alert Category: Critical - Memory

Serviceable: Yes

CIM Information: Prefix: PLAT and **ID:** 0138

SNMP Trap ID: 41

Automatically notify Support: Yes

User response: This is a UEFI detected event. To find the UEFI diagnostic code for this event, in the information center, follow the instructions in "Finding the UEFI diagnostic code" under "UEFI diagnostic codes." Then, in the information center, open the topic for the UEFI diagnostic code and follow the instructions under "User response."

Related Links:

- "Finding the UEFI diagnostic code" on page 521

806f010c-200cffff Uncorrectable error detected for DIMM 12 on Subsystem [MemoryElementName].

Explanation: This message is for the use case when an implementation has detected a Memory uncorrectable error.

May also be shown as 806f010c200cffff or 0x806f010c200cffff

Severity: Error

Alert Category: Critical - Memory

Serviceable: Yes

CIM Information: Prefix: PLAT and **ID:** 0138

SNMP Trap ID: 41

Automatically notify Support: Yes

User response: This is a UEFI detected event. To find the UEFI diagnostic code for this event, in the information center, follow the instructions in "Finding the UEFI diagnostic code" under "UEFI diagnostic codes." Then, in the information center, open the topic for the UEFI diagnostic code and follow the instructions under "User response."

Related Links:

- “Finding the UEFI diagnostic code” on page 521

806f010c-200dffff Uncorrectable error detected for DIMM 13 on Subsystem [MemoryElementName].

Explanation: This message is for the use case when an implementation has detected a Memory uncorrectable error.

May also be shown as 806f010c200dffff or 0x806f010c200dffff

Severity: Error

Alert Category: Critical - Memory

Serviceable: Yes

CIM Information: Prefix: PLAT and **ID:** 0138

SNMP Trap ID: 41

Automatically notify Support: Yes

User response: This is a UEFI detected event. To find the UEFI diagnostic code for this event, in the information center, follow the instructions in "Finding the UEFI diagnostic code" under "UEFI diagnostic codes." Then, in the information center, open the topic for the UEFI diagnostic code and follow the instructions under "User response."

Related Links:

- “Finding the UEFI diagnostic code” on page 521

806f010c-200effff Uncorrectable error detected for DIMM 14 on Subsystem [MemoryElementName].

Explanation: This message is for the use case when an implementation has detected a Memory uncorrectable error.

May also be shown as 806f010c200effff or 0x806f010c200effff

Severity: Error

Alert Category: Critical - Memory

Serviceable: Yes

CIM Information: Prefix: PLAT and **ID:** 0138

SNMP Trap ID: 41

Automatically notify Support: Yes

User response: This is a UEFI detected event. To find the UEFI diagnostic code for this event, in the information center, follow the instructions in "Finding the UEFI diagnostic code" under "UEFI diagnostic codes." Then, in the information center, open the topic for the UEFI diagnostic code and follow the instructions under "User response."

Related Links:

- “Finding the UEFI diagnostic code” on page 521

806f010c-200fffff Uncorrectable error detected for DIMM 15 on Subsystem [MemoryElementName].

Explanation: This message is for the use case when an implementation has detected a Memory uncorrectable error.

May also be shown as 806f010c200fffff or 0x806f010c200fffff

Severity: Error

Alert Category: Critical - Memory

Serviceable: Yes

CIM Information: Prefix: PLAT and **ID:** 0138

SNMP Trap ID: 41

Automatically notify Support: Yes

User response: This is a UEFI detected event. To find the UEFI diagnostic code for this event, in the information center, follow the instructions in "Finding the UEFI diagnostic code" under "UEFI diagnostic codes." Then, in the information center, open the topic for the UEFI diagnostic code and follow the instructions under "User response."

Related Links:

- “Finding the UEFI diagnostic code” on page 521

806f010c-2010ffff Uncorrectable error detected for DIMM 16 on Subsystem [MemoryElementName].

Explanation: This message is for the use case when an implementation has detected a Memory uncorrectable error.

May also be shown as 806f010c2010ffff or 0x806f010c2010ffff

Severity: Error

Alert Category: Critical - Memory

Serviceable: Yes

CIM Information: Prefix: PLAT and **ID:** 0138

SNMP Trap ID: 41

Automatically notify Support: Yes

User response: This is a UEFI detected event. To find the UEFI diagnostic code for this event, in the information center, follow the instructions in "Finding the UEFI diagnostic code" under "UEFI diagnostic codes." Then, in the information center, open the topic for the UEFI diagnostic code and follow the instructions under "User response."

Related Links:

- “Finding the UEFI diagnostic code” on page 521

806f010c-2011ffff Uncorrectable error detected for DIMM 17 on Subsystem [MemoryElementName].

Explanation: This message is for the use case when an implementation has detected a Memory uncorrectable error.

May also be shown as 806f010c2011ffff or 0x806f010c2011ffff

Severity: Error

Alert Category: Critical - Memory

Serviceable: Yes

CIM Information: Prefix: PLAT and **ID:** 0138

SNMP Trap ID: 41

Automatically notify Support: Yes

User response: This is a UEFI detected event. To find the UEFI diagnostic code for this event, in the information center, follow the instructions in "Finding the UEFI diagnostic code" under "UEFI diagnostic codes." Then, in the information center, open the topic for the UEFI diagnostic code and follow the instructions under "User response."

Related Links:

- “Finding the UEFI diagnostic code” on page 521

806f010c-2012ffff Uncorrectable error detected for DIMM 18 on Subsystem [MemoryElementName].

Explanation: This message is for the use case when an implementation has detected a Memory uncorrectable error.

May also be shown as 806f010c2012ffff or 0x806f010c2012ffff

Severity: Error

Alert Category: Critical - Memory

Serviceable: Yes

CIM Information: Prefix: PLAT and **ID:** 0138

SNMP Trap ID: 41

Automatically notify Support: Yes

User response: This is a UEFI detected event. To find the UEFI diagnostic code for this event, in the information center, follow the instructions in "Finding the UEFI diagnostic code" under "UEFI diagnostic codes." Then, in the information center, open the topic for the UEFI diagnostic code and follow the instructions under "User response."

Related Links:

- "Finding the UEFI diagnostic code" on page 521

806f010c-2013ffff Uncorrectable error detected for DIMM 19 on Subsystem [MemoryElementName].

Explanation: This message is for the use case when an implementation has detected a Memory uncorrectable error.

May also be shown as 806f010c2013ffff or 0x806f010c2013ffff

Severity: Error

Alert Category: Critical - Memory

Serviceable: Yes

CIM Information: Prefix: PLAT and **ID:** 0138

SNMP Trap ID: 41

Automatically notify Support: Yes

User response: This is a UEFI detected event. To find the UEFI diagnostic code for this event, in the information center, follow the instructions in "Finding the UEFI diagnostic code" under "UEFI diagnostic codes." Then, in the information center, open the topic for the UEFI diagnostic code and follow the instructions under "User response."

Related Links:

- "Finding the UEFI diagnostic code" on page 521

806f010c-2014ffff Uncorrectable error detected for DIMM 20 on Subsystem [MemoryElementName].

Explanation: This message is for the use case when an implementation has detected a Memory uncorrectable error.

May also be shown as 806f010c2014ffff or 0x806f010c2014ffff

Severity: Error

Alert Category: Critical - Memory

Serviceable: Yes

CIM Information: Prefix: PLAT and **ID:** 0138

SNMP Trap ID: 41

Automatically notify Support: Yes

User response: This is a UEFI detected event. To find the UEFI diagnostic code for this event, in the information center, follow the instructions in "Finding the UEFI diagnostic code" under "UEFI diagnostic codes." Then, in the information center, open the topic for the UEFI diagnostic code and follow the instructions under "User response."

Related Links:

- "Finding the UEFI diagnostic code" on page 521

806f010c-2015ffff Uncorrectable error detected for DIMM 21 on Subsystem [MemoryElementName].

Explanation: This message is for the use case when an implementation has detected a Memory uncorrectable error.

May also be shown as 806f010c2015ffff or 0x806f010c2015ffff

Severity: Error

Alert Category: Critical - Memory

Serviceable: Yes

CIM Information: Prefix: PLAT and **ID:** 0138

SNMP Trap ID: 41

Automatically notify Support: Yes

User response: This is a UEFI detected event. To find the UEFI diagnostic code for this event, in the information center, follow the instructions in "Finding the UEFI diagnostic code" under "UEFI diagnostic codes." Then, in the information center, open the topic for the UEFI diagnostic code and follow the instructions under "User response."

Related Links:

- “Finding the UEFI diagnostic code” on page 521

806f010c-2016ffff Uncorrectable error detected for DIMM 22 on Subsystem [MemoryElementName].

Explanation: This message is for the use case when an implementation has detected a Memory uncorrectable error.

May also be shown as 806f010c2016ffff or 0x806f010c2016ffff

Severity: Error

Alert Category: Critical - Memory

Serviceable: Yes

CIM Information: Prefix: PLAT and **ID:** 0138

SNMP Trap ID: 41

Automatically notify Support: Yes

User response: This is a UEFI detected event. To find the UEFI diagnostic code for this event, in the information center, follow the instructions in "Finding the UEFI diagnostic code" under "UEFI diagnostic codes." Then, in the information center, open the topic for the UEFI diagnostic code and follow the instructions under "User response."

Related Links:

- “Finding the UEFI diagnostic code” on page 521

806f010c-2017ffff Uncorrectable error detected for DIMM 23 on Subsystem [MemoryElementName].

Explanation: This message is for the use case when an implementation has detected a Memory uncorrectable error.

May also be shown as 806f010c2017ffff or 0x806f010c2017ffff

Severity: Error

Alert Category: Critical - Memory

Serviceable: Yes

CIM Information: Prefix: PLAT and **ID:** 0138

SNMP Trap ID: 41

Automatically notify Support: Yes

User response: This is a UEFI detected event. To find the UEFI diagnostic code for this event, in the information center, follow the instructions in "Finding the UEFI diagnostic code" under "UEFI diagnostic codes." Then, in the information center, open the topic for the UEFI diagnostic code and follow the instructions under "User response."

Related Links:

- “Finding the UEFI diagnostic code” on page 521

806f010c-2018ffff Uncorrectable error detected for DIMM 24 on Subsystem [MemoryElementName].

Explanation: This message is for the use case when an implementation has detected a Memory uncorrectable error.

May also be shown as 806f010c2018ffff or 0x806f010c2018ffff

Severity: Error

Alert Category: Critical - Memory

Serviceable: Yes

CIM Information: Prefix: PLAT and **ID:** 0138

SNMP Trap ID: 41

Automatically notify Support: Yes

User response: This is a UEFI detected event. To find the UEFI diagnostic code for this event, in the information center, follow the instructions in "Finding the UEFI diagnostic code" under "UEFI diagnostic codes." Then, in the information center, open the topic for the UEFI diagnostic code and follow the instructions under "User response."

Related Links:

- “Finding the UEFI diagnostic code” on page 521

806f010c-2581ffff Uncorrectable error detected for [PhysicalMemoryElementName] on Subsystem [MemoryElementName].

Explanation: This message is for the use case when an implementation has detected a Memory uncorrectable error.

May also be shown as 806f010c2581ffff or 0x806f010c2581ffff

Severity: Error

Alert Category: Critical - Memory

Serviceable: Yes

CIM Information: Prefix: PLAT and **ID:** 0138

SNMP Trap ID: 41

Automatically notify Support: Yes

User response: This is a UEFI detected event. To find the UEFI diagnostic code for this event, in the information center, follow the instructions in "Finding the UEFI diagnostic code" under "UEFI diagnostic codes." Then, in the information center, open the topic for the UEFI diagnostic code and follow the instructions under "User response."

Related Links:

- “Finding the UEFI diagnostic code” on page 521

806f010d-0400ffff The Drive Drive 0 has been disabled due to a detected fault.

Explanation: The hard disk drive controller has detected a fault in hard disk drive 0. Hard disk drive 0 is now defunct.

May also be shown as 806f010d0400ffff or 0x806f010d0400ffff

Severity: Error

Alert Category: Critical - Hard Disk drive

Serviceable: Yes

CIM Information: Prefix: PLAT and **ID:** 0164

SNMP Trap ID: 5

Automatically notify Support: Yes

User response: Complete the following steps until the problem is solved:

1. Check the Support Portal for service bulletins and RETAIN tips related to your drive.
2. Check the Support Portal for firmware updates related to your drive.
3. Replace the drive.
4. Check for any other RAID-related errors.

806f010d-04013ffff The SEN Drive 12 has been disabled due to a detected fault.

Explanation: The hard disk drive controller has detected a fault in SEN Disk Drive 12. SEN Disk Drive 12 is now defunct.

May also be shown as 806f010d04013ffff or 0x806f010d04013ffff

Severity: Error

Alert Category: Critical - Hard Disk drive

Serviceable: Yes

CIM Information: Prefix: PLAT and **ID:** 0164

SNMP Trap ID: 5

Automatically notify Support: Yes

User response: Complete the following steps until the problem is solved:

1. Check the Support Portal for service bulletins and RETAIN tips related to your drive.
2. Check the Support Portal for firmware updates related to your drive.
3. Replace the drive.
4. Check for any other RAID-related errors.

806f010d-0401ffff The Drive Drive 1 has been disabled due to a detected fault.

Explanation: The hard disk drive controller has detected a fault in hard disk drive 1. Hard disk drive 1 is now defunct.

May also be shown as 806f010d0401ffff or 0x806f010d0401ffff

Severity: Error

Alert Category: Critical - Hard Disk drive

Serviceable: Yes

CIM Information: Prefix: PLAT and **ID:** 0164

SNMP Trap ID: 5

Automatically notify Support: Yes

User response: Complete the following steps until the problem is solved:

1. Check the Support Portal for service bulletins and RETAIN tips related to your drive.
2. Check the Support Portal for firmware updates related to your drive.
3. Replace the drive.
4. Check for any other RAID-related errors.

806f010d-0402ffff The Drive Drive 2 has been disabled due to a detected fault.

Explanation: The hard disk drive controller has detected a fault in hard disk drive 2. Hard disk drive 2 is now defunct.

May also be shown as 806f010d0402ffff or 0x806f010d0402ffff

Severity: Error

Alert Category: Critical - Hard Disk drive

Serviceable: Yes

CIM Information: **Prefix:** PLAT and **ID:** 0164

SNMP Trap ID: 5

Automatically notify Support: Yes

User response: Complete the following steps until the problem is solved:

1. Check the Support Portal for service bulletins and RETAIN tips related to your drive.
2. Check the Support Portal for firmware updates related to your drive.
3. Replace the drive.
4. Check for any other RAID-related errors.

806f010d-0403ffff The Drive Drive 3 has been disabled due to a detected fault.

Explanation: The hard disk drive controller has detected a fault in hard disk drive 3. Hard disk drive 3 is now defunct.

May also be shown as 806f010d0403ffff or 0x806f010d0403ffff

Severity: Error

Alert Category: Critical - Hard Disk drive

Serviceable: Yes

CIM Information: **Prefix:** PLAT and **ID:** 0164

SNMP Trap ID: 5

Automatically notify Support: Yes

User response: Complete the following steps until the problem is solved:

1. Check the Support Portal for service bulletins and RETAIN tips related to your drive.
2. Check the Support Portal for firmware updates related to your drive.
3. Replace the drive.
4. Check for any other RAID-related errors.

806f010d-0404ffff The Drive Drive 4 has been disabled due to a detected fault.

Explanation: The hard disk drive controller has detected a fault in hard disk drive 4. Hard disk drive 4 is now defunct.

May also be shown as 806f010d0404ffff or 0x806f010d0404ffff

Severity: Error

Alert Category: Critical - Hard Disk drive

Serviceable: Yes

CIM Information: **Prefix:** PLAT and **ID:** 0164

SNMP Trap ID: 5

Automatically notify Support: Yes

User response: Complete the following steps until the problem is solved:

1. Check the Support Portal for service bulletins and RETAIN tips related to your drive.
2. Check the Support Portal for firmware updates related to your drive.
3. Replace the drive.
4. Check for any other RAID-related errors.

806f010d-0405ffff The Drive Drive 5 has been disabled due to a detected fault.

Explanation: The hard disk drive controller has detected a fault in hard disk drive 5. Hard disk drive 5 is now defunct.

May also be shown as 806f010d0405ffff or 0x806f010d0405ffff

Severity: Error

Alert Category: Critical - Hard Disk drive

Serviceable: Yes

CIM Information: Prefix: PLAT and **ID:** 0164

SNMP Trap ID: 5

Automatically notify Support: Yes

User response: Complete the following steps until the problem is solved:

1. Check the Support Portal for service bulletins and RETAIN tips related to your drive.
2. Check the Support Portal for firmware updates related to your drive.
3. Replace the drive.
4. Check for any other RAID-related errors.

806f010d-0406ffff The Drive Drive 6 has been disabled due to a detected fault.

Explanation: The hard disk drive controller has detected a fault in hard disk drive 6. Hard disk drive 6 is now defunct.

May also be shown as 806f010d0406ffff or 0x806f010d0406ffff

Severity: Error

Alert Category: Critical - Hard Disk drive

Serviceable: Yes

CIM Information: Prefix: PLAT and **ID:** 0164

SNMP Trap ID: 5

Automatically notify Support: Yes

User response: Complete the following steps until the problem is solved:

1. Check the Support Portal for service bulletins and RETAIN tips related to your drive.
2. Check the Support Portal for firmware updates related to your drive.
3. Replace the drive.
4. Check for any other RAID-related errors.

806f010d-0407ffff The Drive Drive 7 has been disabled due to a detected fault.

Explanation: The hard disk drive controller has detected a fault in hard disk drive 7. Hard disk drive 7 is now defunct.

May also be shown as 806f010d0407ffff or 0x806f010d0407ffff

Severity: Error

Alert Category: Critical - Hard Disk drive

Serviceable: Yes

CIM Information: Prefix: PLAT and **ID:** 0164

SNMP Trap ID: 5

Automatically notify Support: Yes

User response: Complete the following steps until the problem is solved:

1. Check the Support Portal for service bulletins and RETAIN tips related to your drive.
2. Check the Support Portal for firmware updates related to your drive.
3. Replace the drive.
4. Check for any other RAID-related errors.

806f010d-0408ffff The SEN Drive 1 has been disabled due to a detected fault.

Explanation: The hard disk drive controller has detected a fault in SEN Disk Drive 1. SEN Disk Drive 1 is now defunct.

May also be shown as 806f010d0408ffff or 0x806f010d0408ffff

Severity: Error

Alert Category: Critical - Hard Disk drive

Serviceable: Yes

CIM Information: Prefix: PLAT and **ID:** 0164

SNMP Trap ID: 5

Automatically notify Support: Yes

User response: Complete the following steps until the problem is solved:

1. Check the Support Portal for service bulletins and RETAIN tips related to your drive.
2. Check the Support Portal for firmware updates related to your drive.
3. Replace the drive.
4. Check for any other RAID-related errors.

806f010d-0409ffff The SEN Drive 2 has been disabled due to a detected fault.

Explanation: The hard disk drive controller has detected a fault in SEN Disk Drive 2. SEN Disk Drive 2 is now defunct.

May also be shown as 806f010d0409ffff or 0x806f010d0409ffff

Severity: Error

Alert Category: Critical - Hard Disk drive

Serviceable: Yes

CIM Information: Prefix: PLAT and **ID:** 0164

SNMP Trap ID: 5

Automatically notify Support: Yes

User response: Complete the following steps until the problem is solved:

1. Check the Support Portal for service bulletins and RETAIN tips related to your drive.
2. Check the Support Portal for firmware updates related to your drive.
3. Replace the drive.
4. Check for any other RAID-related errors.

806f010d-040affff The SEN Drive 3 has been disabled due to a detected fault.

Explanation: The hard disk drive controller has detected a fault in SEN Disk Drive 3. SEN Disk Drive 3 is now defunct.

May also be shown as 806f010d040affff or 0x806f010d040affff

Severity: Error

Alert Category: Critical - Hard Disk drive

Serviceable: Yes

CIM Information: **Prefix:** PLAT and **ID:** 0164

SNMP Trap ID: 5

Automatically notify Support: Yes

User response: Complete the following steps until the problem is solved:

1. Check the Support Portal for service bulletins and RETAIN tips related to your drive.
2. Check the Support Portal for firmware updates related to your drive.
3. Replace the drive.
4. Check for any other RAID-related errors.

806f010d-040bffff The SEN Drive 4 has been disabled due to a detected fault.

Explanation: The hard disk drive controller has detected a fault in SEN Disk Drive 4. SEN Disk Drive 4 is now defunct.

May also be shown as 806f010d040bffff or 0x806f010d040bffff

Severity: Error

Alert Category: Critical - Hard Disk drive

Serviceable: Yes

CIM Information: **Prefix:** PLAT and **ID:** 0164

SNMP Trap ID: 5

Automatically notify Support: Yes

User response: Complete the following steps until the problem is solved:

1. Check the Support Portal for service bulletins and RETAIN tips related to your drive.
2. Check the Support Portal for firmware updates related to your drive.
3. Replace the drive.
4. Check for any other RAID-related errors.

806f010d-040cffff The SEN Drive 5 has been disabled due to a detected fault.

Explanation: The hard disk drive controller has detected a fault in SEN Disk Drive 5. SEN Disk Drive 5 is now defunct.

May also be shown as 806f010d040cffff or 0x806f010d040cffff

Severity: Error

Alert Category: Critical - Hard Disk drive

Serviceable: Yes

CIM Information: **Prefix:** PLAT and **ID:** 0164

SNMP Trap ID: 5

Automatically notify Support: Yes

User response: Complete the following steps until the problem is solved:

1. Check the Support Portal for service bulletins and RETAIN tips related to your drive.
2. Check the Support Portal for firmware updates related to your drive.
3. Replace the drive.
4. Check for any other RAID-related errors.

806f010d-040dffff The SEN Drive 6 has been disabled due to a detected fault.

Explanation: The hard disk drive controller has detected a fault in SEN Disk Drive 6. SEN Disk Drive 6 is now defunct.

May also be shown as 806f010d040dffff or 0x806f010d040dffff

Severity: Error

Alert Category: Critical - Hard Disk drive

Serviceable: Yes

CIM Information: Prefix: PLAT and **ID:** 0164

SNMP Trap ID: 5

Automatically notify Support: Yes

User response: Complete the following steps until the problem is solved:

1. Check the Support Portal for service bulletins and RETAIN tips related to your drive.
2. Check the Support Portal for firmware updates related to your drive.
3. Replace the drive.
4. Check for any other RAID-related errors.

806f010d-040effff The SEN Drive 7 has been disabled due to a detected fault.

Explanation: The hard disk drive controller has detected a fault in SEN Disk Drive 7. SEN Disk Drive 7 is now defunct.

May also be shown as 806f010d040effff or 0x806f010d040effff

Severity: Error

Alert Category: Critical - Hard Disk drive

Serviceable: Yes

CIM Information: Prefix: PLAT and **ID:** 0164

SNMP Trap ID: 5

Automatically notify Support: Yes

User response: Complete the following steps until the problem is solved:

1. Check the Support Portal for service bulletins and RETAIN tips related to your drive.
2. Check the Support Portal for firmware updates related to your drive.
3. Replace the drive.
4. Check for any other RAID-related errors.

806f010d-040fffff The SEN Drive 8 has been disabled due to a detected fault.

Explanation: The hard disk drive controller has detected a fault in SEN Disk Drive 8. SEN Disk Drive 8 is now defunct.

May also be shown as 806f010d040fffff or 0x806f010d040fffff

Severity: Error

Alert Category: Critical - Hard Disk drive

Serviceable: Yes

CIM Information: Prefix: PLAT and **ID:** 0164

SNMP Trap ID: 5

Automatically notify Support: Yes

User response: Complete the following steps until the problem is solved:

1. Check the Support Portal for service bulletins and RETAIN tips related to your drive.
2. Check the Support Portal for firmware updates related to your drive.
3. Replace the drive.
4. Check for any other RAID-related errors.

806f010d-0410ffff The SEN Drive 9 has been disabled due to a detected fault.

Explanation: The hard disk drive controller has detected a fault in SEN Disk Drive 9. SEN Disk Drive 9 is now defunct.

May also be shown as 806f010d0410ffff or 0x806f010d0410ffff

Severity: Error

Alert Category: Critical - Hard Disk drive

Serviceable: Yes

CIM Information: Prefix: PLAT and **ID:** 0164

SNMP Trap ID: 5

Automatically notify Support: Yes

User response: Complete the following steps until the problem is solved:

1. Check the Support Portal for service bulletins and RETAIN tips related to your drive.
2. Check the Support Portal for firmware updates related to your drive.
3. Replace the drive.
4. Check for any other RAID-related errors.

806f010d-0411ffff The SEN Drive 10 has been disabled due to a detected fault.

Explanation: The hard disk drive controller has detected a fault in SEN Disk Drive 10. SEN Disk Drive 10 is now defunct.

May also be shown as 806f010d0411ffff or 0x806f010d0411ffff

Severity: Error

Alert Category: Critical - Hard Disk drive

Serviceable: Yes

CIM Information: Prefix: PLAT and **ID:** 0164

SNMP Trap ID: 5

Automatically notify Support: Yes

User response: Complete the following steps until the problem is solved:

1. Check the Support Portal for service bulletins and RETAIN tips related to your drive.
2. Check the Support Portal for firmware updates related to your drive.
3. Replace the drive.
4. Check for any other RAID-related errors.

806f010d-0412ffff The SEN Drive 11 has been disabled due to a detected fault.

Explanation: The hard disk drive controller has detected a fault in SEN Disk Drive 11. SEN Disk Drive 11 is now defunct.

May also be shown as 806f010d0412ffff or 0x806f010d0412ffff

Severity: Error

Alert Category: Critical - Hard Disk drive

Serviceable: Yes

CIM Information: **Prefix:** PLAT and **ID:** 0164

SNMP Trap ID: 5

Automatically notify Support: Yes

User response: Complete the following steps until the problem is solved:

1. Check the Support Portal for service bulletins and RETAIN tips related to your drive.
2. Check the Support Portal for firmware updates related to your drive.
3. Replace the drive.
4. Check for any other RAID-related errors.

806f010f-220100ff The System [ComputerSystemElementName] encountered a firmware hang.

Explanation: This message is for the use case when an implementation has detected a System Firmware Hang.

May also be shown as 806f010f220100ff or 0x806f010f220100ff

Severity: Error

Alert Category: System - Boot failure

Serviceable: Yes

CIM Information: **Prefix:** PLAT and **ID:** 0186

SNMP Trap ID: 25

Automatically notify Support: No

User response: This is a UEFI detected event. To find the UEFI diagnostic code for this event, in the information center, follow the instructions in "Finding the UEFI diagnostic code" under "UEFI diagnostic codes." Then, in the information center, open the topic for the UEFI diagnostic code and follow the instructions under "User response."

Related Links:

- “Finding the UEFI diagnostic code” on page 521

806f010f-2201ffff The System [ComputerSystemElementName] encountered a firmware hang.

Explanation: This message is for the use case when an implementation has detected a System Firmware Hang. Firmware Error :

May also be shown as 806f010f2201ffff or 0x806f010f2201ffff

Severity: Error

Alert Category: System - Boot failure

Serviceable: Yes

CIM Information: **Prefix:** PLAT and **ID:** 0186

SNMP Trap ID: 25

Automatically notify Support: No

User response: This is a UEFI detected event. To find the UEFI diagnostic code for this event, in the information center, follow the instructions in "Finding the UEFI diagnostic code" under "UEFI diagnostic codes." Then, in the information center, open the topic for the UEFI diagnostic code and follow the instructions under "User response."

Related Links:

- “Finding the UEFI diagnostic code” on page 521

806f011b-0c01ffff The connector LightPath has encountered a configuration error.

Explanation: The light path LED card is not detected.

May also be shown as 806f011b0c01ffff or 0x806f011b0c01ffff

Severity: Error

Alert Category: Critical - Other

Serviceable: Yes

CIM Information: **Prefix:** PLAT and **ID:** 0266

SNMP Trap ID: 50

Automatically notify Support: Yes

User response: Complete the following steps until the problem is solved:

1. Make sure that the cable from the light path LED card to the system board is securely connected.
2. Replace the light path diagnostics panel.

Related Links:

- "Removing the light path diagnostics panel" on page 608
- "Installing the light path diagnostics panel" on page 608

806f0123-2101ffff Reboot of system [ComputerSystemElementName] initiated by IPMI Watchdog.

Explanation: The IPMI watchdog timer has expired. The compute node has restarted.

May also be shown as 806f01232101ffff or 0x806f01232101ffff

Severity: Info

Alert Category: System - Other

Serviceable: No

CIM Information: **Prefix:** PLAT and **ID:** 0370

SNMP Trap ID:

Automatically notify Support: No

User response: Information only; no action is required.

806f0125-1f05ffff LOM detected as absent.

Explanation: The is no LAN on Motherboard (LOM) detected on this system board.

May also be shown as 806f01251f05ffff or 0x806f01251f05ffff

Severity: Info

Alert Category: System - Other

Serviceable: No

CIM Information: **Prefix:** PLAT and **ID:** 0392

SNMP Trap ID:

Automatically notify Support: No

User response: Information only; no action is required. Models ship without LOM.

806f0207-0301ffff CPU 1 has Failed with FRB1/BIST condition.

Explanation: This message is for the use case when an implementation has detected a Processor Failed - FRB1/BIST condition.

May also be shown as 806f02070301ffff or 0x806f02070301ffff

Severity: Error

Alert Category: Critical - CPU

Serviceable: Yes

CIM Information: **Prefix:** PLAT and **ID:** 0044

SNMP Trap ID: 40

Automatically notify Support: No

User response: This is a UEFI detected event. To find the UEFI diagnostic code for this event, in the information center, follow the instructions in "Finding the UEFI diagnostic code" under "UEFI diagnostic codes." Then, in the information center, open the topic for the UEFI diagnostic code and follow the instructions under "User response."

Related Links:

- “Finding the UEFI diagnostic code” on page 521

806f0207-0302ffff CPU 2 has Failed with FRB1/BIST condition.

Explanation: This message is for the use case when an implementation has detected a Processor Failed - FRB1/BIST condition.

May also be shown as 806f02070302ffff or 0x806f02070302ffff

Severity: Error

Alert Category: Critical - CPU

Serviceable: Yes

CIM Information: Prefix: PLAT and **ID:** 0044

SNMP Trap ID: 40

Automatically notify Support: No

User response: This is a UEFI detected event. To find the UEFI diagnostic code for this event, in the information center, follow the instructions in "Finding the UEFI diagnostic code" under "UEFI diagnostic codes." Then, in the information center, open the topic for the UEFI diagnostic code and follow the instructions under "User response."

Related Links:

- “Finding the UEFI diagnostic code” on page 521

806f0207-2584ffff [ProcessorElementName] has Failed with FRB1/BIST condition.

Explanation: This message is for the use case when an implementation has detected a Processor Failed - FRB1/BIST condition. (It might be All CPUs or One of CPUs as well)

May also be shown as 806f02072584ffff or 0x806f02072584ffff

Severity: Error

Alert Category: Critical - CPU

Serviceable: Yes

CIM Information: Prefix: PLAT and **ID:** 0044

SNMP Trap ID: 40

Automatically notify Support: No

User response: This is a UEFI detected event. To find the UEFI diagnostic code for this event, in the information center, follow the instructions in "Finding the UEFI diagnostic code" under "UEFI diagnostic codes." Then, in the information center, open the topic for the UEFI diagnostic code and follow the instructions under "User response."

Related Links:

- “Finding the UEFI diagnostic code” on page 521

806f020d-0400ffff Failure Predicted on drive Drive 0 for array [ComputerSystemElementName].

Explanation: Failure predicted (PFA) on the hard drive.

May also be shown as 806f020d0400ffff or 0x806f020d0400ffff

Severity: Warning

Alert Category: System - Predicted Failure

Serviceable: Yes

CIM Information: **Prefix:** PLAT and **ID:** 0168

SNMP Trap ID: 27

Automatically notify Support: Yes

User response: Replace hard disk drive 0 at the next maintenance period.

806f020d-0401ffff Failure Predicted on drive Drive 1 for array [ComputerSystemElementName].

Explanation: Failure predicted (PFA) on the hard drive.

May also be shown as 806f020d0401ffff or 0x806f020d0401ffff

Severity: Warning

Alert Category: System - Predicted Failure

Serviceable: Yes

CIM Information: **Prefix:** PLAT and **ID:** 0168

SNMP Trap ID: 27

Automatically notify Support: Yes

User response: Replace hard disk drive 1 at the next maintenance period.

806f020d-0402ffff Failure Predicted on drive Drive 2 for array [ComputerSystemElementName].

Explanation: This message is for the use case when an implementation has detected an Array Failure is Predicted.

May also be shown as 806f020d0402ffff or 0x806f020d0402ffff

Severity: Warning

Alert Category: System - Predicted Failure

Serviceable: Yes

CIM Information: **Prefix:** PLAT and **ID:** 0168

SNMP Trap ID: 27

Automatically notify Support: Yes

User response: Replace hard disk drive 2 at the next maintenance period.

806f020d-0403ffff Failure Predicted on drive Drive 3 for array [ComputerSystemElementName].

Explanation: This message is for the use case when an implementation has detected an Array Failure is Predicted.

May also be shown as 806f020d0403ffff or 0x806f020d0403ffff

Severity: Warning

Alert Category: System - Predicted Failure

Serviceable: Yes

CIM Information: **Prefix:** PLAT and **ID:** 0168

SNMP Trap ID: 27

Automatically notify Support: Yes

User response: Replace hard disk drive 3 at the next maintenance period.

806f020d-0404ffff Failure Predicted on drive Drive 4 for array [ComputerSystemElementName].

Explanation: This message is for the use case when an implementation has detected an Array Failure is Predicted. May also be shown as 806f020d0404ffff or 0x806f020d0404ffff

Severity: Warning

Alert Category: System - Predicted Failure

Serviceable: Yes

CIM Information: Prefix: PLAT and **ID:** 0168

SNMP Trap ID: 27

Automatically notify Support: Yes

User response: Replace hard disk drive 4 at the next maintenance period.

806f020d-0405ffff Failure Predicted on drive Drive 5 for array [ComputerSystemElementName].

Explanation: This message is for the use case when an implementation has detected an Array Failure is Predicted. May also be shown as 806f020d0405ffff or 0x806f020d0405ffff

Severity: Warning

Alert Category: System - Predicted Failure

Serviceable: Yes

CIM Information: Prefix: PLAT and **ID:** 0168

SNMP Trap ID: 27

Automatically notify Support: Yes

User response: Replace hard disk drive 5 at the next maintenance period.

806f020d-0406ffff Failure Predicted on drive Drive 6 for array [ComputerSystemElementName].

Explanation: This message is for the use case when an implementation has detected an Array Failure is Predicted. May also be shown as 806f020d0406ffff or 0x806f020d0406ffff

Severity: Warning

Alert Category: System - Predicted Failure

Serviceable: Yes

CIM Information: Prefix: PLAT and **ID:** 0168

SNMP Trap ID: 27

Automatically notify Support: Yes

User response: Replace hard disk drive 6 at the next maintenance period.

806f020d-0407ffff Failure Predicted on drive Drive 7 for array [ComputerSystemElementName].

Explanation: This message is for the use case when an implementation has detected an Array Failure is Predicted. May also be shown as 806f020d0407ffff or 0x806f020d0407ffff

Severity: Warning

Alert Category: System - Predicted Failure

Serviceable: Yes

CIM Information: Prefix: PLAT and **ID:** 0168

SNMP Trap ID: 27

Automatically notify Support: Yes

User response: Replace hard disk drive 7 at the next maintenance period.

806f0223-2101ffff Powering off system [ComputerSystemElementName] initiated by IPMI Watchdog.

Explanation: The IPMI watchdog timer has expired. The compute node has been powered off.

May also be shown as 806f02232101ffff or 0x806f02232101ffff

Severity: Info

Alert Category: System - Other

Serviceable: No

CIM Information: Prefix: PLAT and **ID:** 0372

SNMP Trap ID:

Automatically notify Support: No

User response: Information only; no action is required.

806f030c-2001ffff Scrub Failure for DIMM 1 on Subsystem [MemoryElementName].

Explanation: Memory error discovered during boot..(not a runtime error).

May also be shown as 806f030c2001ffff or 0x806f030c2001ffff

Severity: Error

Alert Category: Critical - Memory

Serviceable: Yes

CIM Information: Prefix: PLAT and **ID:** 0136

SNMP Trap ID: 41

Automatically notify Support: No

User response: This is a UEFI detected event. The UEFI diagnostic code for this event can be found in the logged IMM message text. Please refer to the UEFI diagnostic code in the "UEFI diagnostic code" section of the Information Center for the appropriate user response.

Related Links:

- “Finding the UEFI diagnostic code” on page 521

806f030c-2002ffff Scrub Failure for DIMM 2 on Subsystem [MemoryElementName].

Explanation: Memory error discovered during boot..(not a runtime error).

May also be shown as 806f030c2002ffff or 0x806f030c2002ffff

Severity: Error

Alert Category: Critical - Memory

Serviceable: Yes

CIM Information: Prefix: PLAT and **ID:** 0136

SNMP Trap ID: 41

Automatically notify Support: No

User response: This is a UEFI detected event. The UEFI diagnostic code for this event can be found in the logged IMM message text. Please refer to the UEFI diagnostic code in the "UEFI diagnostic code" section of the Information Center for the appropriate user response.

Related Links:

- "Finding the UEFI diagnostic code" on page 521

806f030c-2003ffff Scrub Failure for DIMM 3 on Subsystem [MemoryElementName].

Explanation: Memory error discovered during boot..(not a runtime error).

May also be shown as 806f030c2003ffff or 0x806f030c2003ffff

Severity: Error

Alert Category: Critical - Memory

Serviceable: Yes

CIM Information: Prefix: PLAT and **ID:** 0136

SNMP Trap ID: 41

Automatically notify Support: No

User response: This is a UEFI detected event. The UEFI diagnostic code for this event can be found in the logged IMM message text. Please refer to the UEFI diagnostic code in the "UEFI diagnostic code" section of the Information Center for the appropriate user response.

Related Links:

- "Finding the UEFI diagnostic code" on page 521

806f030c-2004ffff Scrub Failure for DIMM 4 on Subsystem [MemoryElementName].

Explanation: Memory error discovered during boot..(not a runtime error).

May also be shown as 806f030c2004ffff or 0x806f030c2004ffff

Severity: Error

Alert Category: Critical - Memory

Serviceable: Yes

CIM Information: Prefix: PLAT and **ID:** 0136

SNMP Trap ID: 41

Automatically notify Support: No

User response: This is a UEFI detected event. The UEFI diagnostic code for this event can be found in the logged IMM message text. Please refer to the UEFI diagnostic code in the "UEFI diagnostic code" section of the Information Center for the appropriate user response.

Related Links:

- "Finding the UEFI diagnostic code" on page 521

806f030c-2005ffff Scrub Failure for DIMM 5 on Subsystem [MemoryElementName].

Explanation: Memory error discovered during boot..(not a runtime error).

May also be shown as 806f030c2005ffff or 0x806f030c2005ffff

Severity: Error

Alert Category: Critical - Memory

Serviceable: Yes

CIM Information: Prefix: PLAT and **ID:** 0136

SNMP Trap ID: 41

Automatically notify Support: No

User response: This is a UEFI detected event. The UEFI diagnostic code for this event can be found in the logged

IMM message text. Please refer to the UEFI diagnostic code in the "UEFI diagnostic code" section of the Information Center for the appropriate user response.

Related Links:

- “Finding the UEFI diagnostic code” on page 521

806f030c-2006ffff Scrub Failure for DIMM 6 on Subsystem [MemoryElementName].

Explanation: Memory error discovered during boot..(not a runtime error).

May also be shown as 806f030c2006ffff or 0x806f030c2006ffff

Severity: Error

Alert Category: Critical - Memory

Serviceable: Yes

CIM Information: Prefix: PLAT and **ID:** 0136

SNMP Trap ID: 41

Automatically notify Support: No

User response: This is a UEFI detected event. The UEFI diagnostic code for this event can be found in the logged IMM message text. Please refer to the UEFI diagnostic code in the "UEFI diagnostic code" section of the Information Center for the appropriate user response.

Related Links:

- “Finding the UEFI diagnostic code” on page 521

806f030c-2007ffff Scrub Failure for DIMM 7 on Subsystem [MemoryElementName].

Explanation: Memory error discovered during boot..(not a runtime error).

May also be shown as 806f030c2007ffff or 0x806f030c2007ffff

Severity: Error

Alert Category: Critical - Memory

Serviceable: Yes

CIM Information: Prefix: PLAT and **ID:** 0136

SNMP Trap ID: 41

Automatically notify Support: No

User response: This is a UEFI detected event. The UEFI diagnostic code for this event can be found in the logged IMM message text. Please refer to the UEFI diagnostic code in the "UEFI diagnostic code" section of the Information Center for the appropriate user response.

Related Links:

- “Finding the UEFI diagnostic code” on page 521

806f030c-2008ffff Scrub Failure for DIMM 8 on Subsystem [MemoryElementName].

Explanation: Memory error discovered during boot..(not a runtime error).

May also be shown as 806f030c2008ffff or 0x806f030c2008ffff

Severity: Error

Alert Category: Critical - Memory

Serviceable: Yes

CIM Information: Prefix: PLAT and **ID:** 0136

SNMP Trap ID: 41

Automatically notify Support: No

User response: This is a UEFI detected event. The UEFI diagnostic code for this event can be found in the logged IMM message text. Please refer to the UEFI diagnostic code in the "UEFI diagnostic code" section of the Information Center for the appropriate user response.

Related Links:

- "Finding the UEFI diagnostic code" on page 521

806f030c-2009ffff Scrub Failure for DIMM 9 on Subsystem [MemoryElementName].

Explanation: Memory error discovered during boot..(not a runtime error).

May also be shown as 806f030c2009ffff or 0x806f030c2009ffff

Severity: Error

Alert Category: Critical - Memory

Serviceable: Yes

CIM Information: Prefix: PLAT and **ID:** 0136

SNMP Trap ID: 41

Automatically notify Support: No

User response: This is a UEFI detected event. The UEFI diagnostic code for this event can be found in the logged IMM message text. Please refer to the UEFI diagnostic code in the "UEFI diagnostic code" section of the Information Center for the appropriate user response.

Related Links:

- "Finding the UEFI diagnostic code" on page 521

806f030c-200affff Scrub Failure for DIMM 10 on Subsystem [MemoryElementName].

Explanation: Memory error discovered during boot..(not a runtime error).

May also be shown as 806f030c200affff or 0x806f030c200affff

Severity: Error

Alert Category: Critical - Memory

Serviceable: Yes

CIM Information: Prefix: PLAT and **ID:** 0136

SNMP Trap ID: 41

Automatically notify Support: No

User response: This is a UEFI detected event. The UEFI diagnostic code for this event can be found in the logged IMM message text. Please refer to the UEFI diagnostic code in the "UEFI diagnostic code" section of the Information Center for the appropriate user response.

Related Links:

- "Finding the UEFI diagnostic code" on page 521

806f030c-200bffff Scrub Failure for DIMM 11 on Subsystem [MemoryElementName].

Explanation: Memory error discovered during boot..(not a runtime error).

May also be shown as 806f030c200bffff or 0x806f030c200bffff

Severity: Error

Alert Category: Critical - Memory

Serviceable: Yes

CIM Information: **Prefix:** PLAT and **ID:** 0136

SNMP Trap ID: 41

Automatically notify Support: No

User response: This is a UEFI detected event. The UEFI diagnostic code for this event can be found in the logged IMM message text. Please refer to the UEFI diagnostic code in the "UEFI diagnostic code" section of the Information Center for the appropriate user response.

Related Links:

- "Finding the UEFI diagnostic code" on page 521

806f030c-200cffff Scrub Failure for DIMM 12 on Subsystem [MemoryElementName].

Explanation: Memory error discovered during boot..(not a runtime error).

May also be shown as 806f030c200cffff or 0x806f030c200cffff

Severity: Error

Alert Category: Critical - Memory

Serviceable: Yes

CIM Information: **Prefix:** PLAT and **ID:** 0136

SNMP Trap ID: 41

Automatically notify Support: No

User response: This is a UEFI detected event. The UEFI diagnostic code for this event can be found in the logged IMM message text. Please refer to the UEFI diagnostic code in the "UEFI diagnostic code" section of the Information Center for the appropriate user response.

Related Links:

- "Finding the UEFI diagnostic code" on page 521

806f030c-200dffff Scrub Failure for DIMM 13 on Subsystem [MemoryElementName].

Explanation: Memory error discovered during boot..(not a runtime error).

May also be shown as 806f030c200dffff or 0x806f030c200dffff

Severity: Error

Alert Category: Critical - Memory

Serviceable: Yes

CIM Information: **Prefix:** PLAT and **ID:** 0136

SNMP Trap ID: 41

Automatically notify Support: No

User response: This is a UEFI detected event. The UEFI diagnostic code for this event can be found in the logged IMM message text. Please refer to the UEFI diagnostic code in the "UEFI diagnostic code" section of the Information Center for the appropriate user response.

Related Links:

- "Finding the UEFI diagnostic code" on page 521

806f030c-200effff Scrub Failure for DIMM 14 on Subsystem [MemoryElementName].

Explanation: Memory error discovered during boot..(not a runtime error).

May also be shown as 806f030c200effff or 0x806f030c200effff

Severity: Error

Alert Category: Critical - Memory

Serviceable: Yes

CIM Information: **Prefix:** PLAT and **ID:** 0136

SNMP Trap ID: 41

Automatically notify Support: No

User response: This is a UEFI detected event. The UEFI diagnostic code for this event can be found in the logged IMM message text. Please refer to the UEFI diagnostic code in the "UEFI diagnostic code" section of the Information Center for the appropriate user response.

Related Links:

- "Finding the UEFI diagnostic code" on page 521

806f030c-200fffff Scrub Failure for DIMM 15 on Subsystem [MemoryElementName].

Explanation: Memory error discovered during boot..(not a runtime error).

May also be shown as 806f030c200fffff or 0x806f030c200fffff

Severity: Error

Alert Category: Critical - Memory

Serviceable: Yes

CIM Information: **Prefix:** PLAT and **ID:** 0136

SNMP Trap ID: 41

Automatically notify Support: No

User response: This is a UEFI detected event. The UEFI diagnostic code for this event can be found in the logged IMM message text. Please refer to the UEFI diagnostic code in the "UEFI diagnostic code" section of the Information Center for the appropriate user response.

Related Links:

- "Finding the UEFI diagnostic code" on page 521

806f030c-2010ffff Scrub Failure for DIMM 16 on Subsystem [MemoryElementName].

Explanation: Memory error discovered during boot..(not a runtime error).

May also be shown as 806f030c2010ffff or 0x806f030c2010ffff

Severity: Error

Alert Category: Critical - Memory

Serviceable: Yes

CIM Information: **Prefix:** PLAT and **ID:** 0136

SNMP Trap ID: 41

Automatically notify Support: No

User response: This is a UEFI detected event. The UEFI diagnostic code for this event can be found in the logged IMM message text. Please refer to the UEFI diagnostic code in the "UEFI diagnostic code" section of the Information Center for the appropriate user response.

Related Links:

- "Finding the UEFI diagnostic code" on page 521

806f030c-2011ffff Scrub Failure for DIMM 17 on Subsystem [MemoryElementName].

Explanation: Memory error discovered during boot..(not a runtime error).

May also be shown as 806f030c2011ffff or 0x806f030c2011ffff

Severity: Error

Alert Category: Critical - Memory

Serviceable: Yes

CIM Information: Prefix: PLAT and **ID:** 0136

SNMP Trap ID: 41

Automatically notify Support: No

User response: This is a UEFI detected event. The UEFI diagnostic code for this event can be found in the logged IMM message text. Please refer to the UEFI diagnostic code in the "UEFI diagnostic code" section of the Information Center for the appropriate user response.

Related Links:

- "Finding the UEFI diagnostic code" on page 521

806f030c-2012ffff Scrub Failure for DIMM 18 on Subsystem [MemoryElementName].

Explanation: Memory error discovered during boot..(not a runtime error).

May also be shown as 806f030c2012ffff or 0x806f030c2012ffff

Severity: Error

Alert Category: Critical - Memory

Serviceable: Yes

CIM Information: Prefix: PLAT and **ID:** 0136

SNMP Trap ID: 41

Automatically notify Support: No

User response: This is a UEFI detected event. The UEFI diagnostic code for this event can be found in the logged IMM message text. Please refer to the UEFI diagnostic code in the "UEFI diagnostic code" section of the Information Center for the appropriate user response.

Related Links:

- "Finding the UEFI diagnostic code" on page 521

806f030c-2013ffff Scrub Failure for DIMM 19 on Subsystem [MemoryElementName].

Explanation: Memory error discovered during boot..(not a runtime error).

May also be shown as 806f030c2013ffff or 0x806f030c2013ffff

Severity: Error

Alert Category: Critical - Memory

Serviceable: Yes

CIM Information: Prefix: PLAT and **ID:** 0136

SNMP Trap ID: 41

Automatically notify Support: No

User response: This is a UEFI detected event. The UEFI diagnostic code for this event can be found in the logged IMM message text. Please refer to the UEFI diagnostic code in the "UEFI diagnostic code" section of the Information Center for the appropriate user response.

Related Links:

- "Finding the UEFI diagnostic code" on page 521

806f030c-2014ffff Scrub Failure for DIMM 20 on Subsystem [MemoryElementName].

Explanation: Memory error discovered during boot..(not a runtime error).

May also be shown as 806f030c2014ffff or 0x806f030c2014ffff

Severity: Error

Alert Category: Critical - Memory

Serviceable: Yes

CIM Information: Prefix: PLAT and **ID:** 0136

SNMP Trap ID: 41

Automatically notify Support: No

User response: This is a UEFI detected event. The UEFI diagnostic code for this event can be found in the logged IMM message text. Please refer to the UEFI diagnostic code in the "UEFI diagnostic code" section of the Information Center for the appropriate user response.

Related Links:

- "Finding the UEFI diagnostic code" on page 521

806f030c-2015ffff Scrub Failure for DIMM 21 on Subsystem [MemoryElementName].

Explanation: Memory error discovered during boot..(not a runtime error).

May also be shown as 806f030c2015ffff or 0x806f030c2015ffff

Severity: Error

Alert Category: Critical - Memory

Serviceable: Yes

CIM Information: Prefix: PLAT and **ID:** 0136

SNMP Trap ID: 41

Automatically notify Support: No

User response: This is a UEFI detected event. The UEFI diagnostic code for this event can be found in the logged IMM message text. Please refer to the UEFI diagnostic code in the "UEFI diagnostic code" section of the Information Center for the appropriate user response.

Related Links:

- "Finding the UEFI diagnostic code" on page 521

806f030c-2016ffff Scrub Failure for DIMM 22 on Subsystem [MemoryElementName].

Explanation: Memory error discovered during boot..(not a runtime error).

May also be shown as 806f030c2016ffff or 0x806f030c2016ffff

Severity: Error

Alert Category: Critical - Memory

Serviceable: Yes

CIM Information: Prefix: PLAT and **ID:** 0136

SNMP Trap ID: 41

Automatically notify Support: No

User response: This is a UEFI detected event. The UEFI diagnostic code for this event can be found in the logged

IMM message text. Please refer to the UEFI diagnostic code in the "UEFI diagnostic code" section of the Information Center for the appropriate user response.

Related Links:

- “Finding the UEFI diagnostic code” on page 521

806f030c-2017ffff Scrub Failure for DIMM 23 on Subsystem [MemoryElementName].

Explanation: Memory error discovered during boot..(not a runtime error).

May also be shown as 806f030c2017ffff or 0x806f030c2017ffff

Severity: Error

Alert Category: Critical - Memory

Serviceable: Yes

CIM Information: Prefix: PLAT and **ID:** 0136

SNMP Trap ID: 41

Automatically notify Support: No

User response: This is a UEFI detected event. The UEFI diagnostic code for this event can be found in the logged IMM message text. Please refer to the UEFI diagnostic code in the "UEFI diagnostic code" section of the Information Center for the appropriate user response.

Related Links:

- “Finding the UEFI diagnostic code” on page 521

806f030c-2018ffff Scrub Failure for DIMM 24 on Subsystem [MemoryElementName].

Explanation: Memory error discovered during boot..(not a runtime error).

May also be shown as 806f030c2018ffff or 0x806f030c2018ffff

Severity: Error

Alert Category: Critical - Memory

Serviceable: Yes

CIM Information: Prefix: PLAT and **ID:** 0136

SNMP Trap ID: 41

Automatically notify Support: No

User response: This is a UEFI detected event. The UEFI diagnostic code for this event can be found in the logged IMM message text. Please refer to the UEFI diagnostic code in the "UEFI diagnostic code" section of the Information Center for the appropriate user response.

Related Links:

- “Finding the UEFI diagnostic code” on page 521

806f030c-2581ffff Scrub Failure for [PhysicalMemoryElementName] on Subsystem [MemoryElementName].

Explanation: Memory error discovered during boot..(not a runtime error).

May also be shown as 806f030c2581ffff or 0x806f030c2581ffff

Severity: Error

Alert Category: Critical - Memory

Serviceable: Yes

CIM Information: Prefix: PLAT and **ID:** 0136

SNMP Trap ID: 41

Automatically notify Support: No

User response: This is a UEFI detected event. The UEFI diagnostic code for this event can be found in the logged IMM message text. Please refer to the UEFI diagnostic code in the "UEFI diagnostic code" section of the Information Center for the appropriate user response.

Related Links:

- "Finding the UEFI diagnostic code" on page 521

806f0313-1701ffff A software NMI has occurred on system [ComputerSystemElementName].

Explanation: A software NMI has occurred. The compute node might have restarted, depending on the configuration setting.

May also be shown as 806f03131701ffff or 0x806f03131701ffff

Severity: Error

Alert Category: Critical - Other

Serviceable: Yes

CIM Information: Prefix: PLAT and **ID:** 0228

SNMP Trap ID: 50

Automatically notify Support: No

User response: Check the operating-system logs and resolve any issues related the NMI.

806f0323-2101ffff Power cycle of system [ComputerSystemElementName] initiated by watchdog IPMI Watchdog.

Explanation: The IPMI watchdog timer has expired. The compute node has been powered off and powered on.

May also be shown as 806f03232101ffff or 0x806f03232101ffff

Severity: Info

Alert Category: System - Other

Serviceable: No

CIM Information: Prefix: PLAT and **ID:** 0374

SNMP Trap ID:

Automatically notify Support: No

User response: Information only; no action is required.

806f040c-2001ffff DIMM 1 Disabled on Subsystem [MemoryElementName].

Explanation: This message is for the use case when an implementation has detected that Memory has been Disabled.

May also be shown as 806f040c2001ffff or 0x806f040c2001ffff

Severity: Info

Alert Category: System - Other

Serviceable: No

CIM Information: Prefix: PLAT and **ID:** 0131

SNMP Trap ID:

Automatically notify Support: No

User response: This is a UEFI detected event. To find the UEFI diagnostic code for this event, in the information center, follow the instructions in "Finding the UEFI diagnostic code" under "UEFI diagnostic codes." Then, in the information center, open the topic for the UEFI diagnostic code and follow the instructions under "User response."

Related Links:

- “Finding the UEFI diagnostic code” on page 521

806f040c-2002ffff DIMM 2 Disabled on Subsystem [MemoryElementName].

Explanation: This message is for the use case when an implementation has detected that Memory has been Disabled.

May also be shown as 806f040c2002ffff or 0x806f040c2002ffff

Severity: Info

Alert Category: System - Other

Serviceable: No

CIM Information: Prefix: PLAT and **ID:** 0131

SNMP Trap ID:

Automatically notify Support: No

User response: This is a UEFI detected event. To find the UEFI diagnostic code for this event, in the information center, follow the instructions in "Finding the UEFI diagnostic code" under "UEFI diagnostic codes." Then, in the information center, open the topic for the UEFI diagnostic code and follow the instructions under "User response."

Related Links:

- “Finding the UEFI diagnostic code” on page 521

806f040c-2003ffff DIMM 3 Disabled on Subsystem [MemoryElementName].

Explanation: This message is for the use case when an implementation has detected that Memory has been Disabled.

May also be shown as 806f040c2003ffff or 0x806f040c2003ffff

Severity: Info

Alert Category: System - Other

Serviceable: No

CIM Information: Prefix: PLAT and **ID:** 0131

SNMP Trap ID:

Automatically notify Support: No

User response: This is a UEFI detected event. To find the UEFI diagnostic code for this event, in the information center, follow the instructions in "Finding the UEFI diagnostic code" under "UEFI diagnostic codes." Then, in the information center, open the topic for the UEFI diagnostic code and follow the instructions under "User response."

Related Links:

- “Finding the UEFI diagnostic code” on page 521

806f040c-2004ffff DIMM 4 Disabled on Subsystem [MemoryElementName].

Explanation: This message is for the use case when an implementation has detected that Memory has been Disabled.

May also be shown as 806f040c2004ffff or 0x806f040c2004ffff

Severity: Info

Alert Category: System - Other

Serviceable: No

CIM Information: Prefix: PLAT and **ID:** 0131

SNMP Trap ID:

Automatically notify Support: No

User response: This is a UEFI detected event. To find the UEFI diagnostic code for this event, in the information center, follow the instructions in "Finding the UEFI diagnostic code" under "UEFI diagnostic codes." Then, in the information center, open the topic for the UEFI diagnostic code and follow the instructions under "User response."

Related Links:

- "Finding the UEFI diagnostic code" on page 521

806f040c-2005ffff DIMM 5 Disabled on Subsystem [MemoryElementName].

Explanation: This message is for the use case when an implementation has detected that Memory has been Disabled.

May also be shown as 806f040c2005ffff or 0x806f040c2005ffff

Severity: Info

Alert Category: System - Other

Serviceable: No

CIM Information: Prefix: PLAT and **ID:** 0131

SNMP Trap ID:

Automatically notify Support: No

User response: This is a UEFI detected event. To find the UEFI diagnostic code for this event, in the information center, follow the instructions in "Finding the UEFI diagnostic code" under "UEFI diagnostic codes." Then, in the information center, open the topic for the UEFI diagnostic code and follow the instructions under "User response."

Related Links:

- "Finding the UEFI diagnostic code" on page 521

806f040c-2006ffff DIMM 6 Disabled on Subsystem [MemoryElementName].

Explanation: This message is for the use case when an implementation has detected that Memory has been Disabled.

May also be shown as 806f040c2006ffff or 0x806f040c2006ffff

Severity: Info

Alert Category: System - Other

Serviceable: No

CIM Information: Prefix: PLAT and **ID:** 0131

SNMP Trap ID:

Automatically notify Support: No

User response: This is a UEFI detected event. To find the UEFI diagnostic code for this event, in the information center, follow the instructions in "Finding the UEFI diagnostic code" under "UEFI diagnostic codes." Then, in the information center, open the topic for the UEFI diagnostic code and follow the instructions under "User response."

Related Links:

- "Finding the UEFI diagnostic code" on page 521

806f040c-2007ffff DIMM 7 Disabled on Subsystem [MemoryElementName].

Explanation: This message is for the use case when an implementation has detected that Memory has been Disabled.

May also be shown as 806f040c2007ffff or 0x806f040c2007ffff

Severity: Info

Alert Category: System - Other

Serviceable: No

CIM Information: **Prefix:** PLAT and **ID:** 0131

SNMP Trap ID:

Automatically notify Support: No

User response: This is a UEFI detected event. To find the UEFI diagnostic code for this event, in the information center, follow the instructions in "Finding the UEFI diagnostic code" under "UEFI diagnostic codes." Then, in the information center, open the topic for the UEFI diagnostic code and follow the instructions under "User response."

Related Links:

- “Finding the UEFI diagnostic code” on page 521

806f040c-2008ffff DIMM 8 Disabled on Subsystem [MemoryElementName].

Explanation: This message is for the use case when an implementation has detected that Memory has been Disabled.

May also be shown as 806f040c2008ffff or 0x806f040c2008ffff

Severity: Info

Alert Category: System - Other

Serviceable: No

CIM Information: **Prefix:** PLAT and **ID:** 0131

SNMP Trap ID:

Automatically notify Support: No

User response: This is a UEFI detected event. To find the UEFI diagnostic code for this event, in the information center, follow the instructions in "Finding the UEFI diagnostic code" under "UEFI diagnostic codes." Then, in the information center, open the topic for the UEFI diagnostic code and follow the instructions under "User response."

Related Links:

- “Finding the UEFI diagnostic code” on page 521

806f040c-2009ffff DIMM 9 Disabled on Subsystem [MemoryElementName].

Explanation: This message is for the use case when an implementation has detected that Memory has been Disabled.

May also be shown as 806f040c2009ffff or 0x806f040c2009ffff

Severity: Info

Alert Category: System - Other

Serviceable: No

CIM Information: **Prefix:** PLAT and **ID:** 0131

SNMP Trap ID:

Automatically notify Support: No

User response: This is a UEFI detected event. To find the UEFI diagnostic code for this event, in the information center, follow the instructions in "Finding the UEFI diagnostic code" under "UEFI diagnostic codes." Then, in the information center, open the topic for the UEFI diagnostic code and follow the instructions under "User response."

Related Links:

- “Finding the UEFI diagnostic code” on page 521

806f040c-200affff DIMM 10 Disabled on Subsystem [MemoryElementName].

Explanation: This message is for the use case when an implementation has detected that Memory has been Disabled.

May also be shown as 806f040c200affff or 0x806f040c200affff

Severity: Info

Alert Category: System - Other

Serviceable: No

CIM Information: Prefix: PLAT and **ID:** 0131

SNMP Trap ID:

Automatically notify Support: No

User response: This is a UEFI detected event. To find the UEFI diagnostic code for this event, in the information center, follow the instructions in "Finding the UEFI diagnostic code" under "UEFI diagnostic codes." Then, in the information center, open the topic for the UEFI diagnostic code and follow the instructions under "User response."

Related Links:

- “Finding the UEFI diagnostic code” on page 521

806f040c-200bffff DIMM 11 Disabled on Subsystem [MemoryElementName].

Explanation: This message is for the use case when an implementation has detected that Memory has been Disabled.

May also be shown as 806f040c200bffff or 0x806f040c200bffff

Severity: Info

Alert Category: System - Other

Serviceable: No

CIM Information: Prefix: PLAT and **ID:** 0131

SNMP Trap ID:

Automatically notify Support: No

User response: This is a UEFI detected event. To find the UEFI diagnostic code for this event, in the information center, follow the instructions in "Finding the UEFI diagnostic code" under "UEFI diagnostic codes." Then, in the information center, open the topic for the UEFI diagnostic code and follow the instructions under "User response."

Related Links:

- “Finding the UEFI diagnostic code” on page 521

806f040c-200cffff DIMM 12 Disabled on Subsystem [MemoryElementName].

Explanation: This message is for the use case when an implementation has detected that Memory has been Disabled.

May also be shown as 806f040c200cffff or 0x806f040c200cffff

Severity: Info

Alert Category: System - Other

Serviceable: No

CIM Information: Prefix: PLAT and **ID:** 0131

SNMP Trap ID:

Automatically notify Support: No

User response: This is a UEFI detected event. To find the UEFI diagnostic code for this event, in the information

center, follow the instructions in "Finding the UEFI diagnostic code" under "UEFI diagnostic codes." Then, in the information center, open the topic for the UEFI diagnostic code and follow the instructions under "User response."

Related Links:

- "Finding the UEFI diagnostic code" on page 521

806f040c-200dffff DIMM 13 Disabled on Subsystem [MemoryElementName].

Explanation: This message is for the use case when an implementation has detected that Memory has been Disabled.

May also be shown as 806f040c200dffff or 0x806f040c200dffff

Severity: Info

Alert Category: System - Other

Serviceable: No

CIM Information: Prefix: PLAT and **ID:** 0131

SNMP Trap ID:

Automatically notify Support: No

User response: This is a UEFI detected event. To find the UEFI diagnostic code for this event, in the information center, follow the instructions in "Finding the UEFI diagnostic code" under "UEFI diagnostic codes." Then, in the information center, open the topic for the UEFI diagnostic code and follow the instructions under "User response."

Related Links:

- "Finding the UEFI diagnostic code" on page 521

806f040c-200effff DIMM 14 Disabled on Subsystem [MemoryElementName].

Explanation: This message is for the use case when an implementation has detected that Memory has been Disabled.

May also be shown as 806f040c200effff or 0x806f040c200effff

Severity: Info

Alert Category: System - Other

Serviceable: No

CIM Information: Prefix: PLAT and **ID:** 0131

SNMP Trap ID:

Automatically notify Support: No

User response: This is a UEFI detected event. To find the UEFI diagnostic code for this event, in the information center, follow the instructions in "Finding the UEFI diagnostic code" under "UEFI diagnostic codes." Then, in the information center, open the topic for the UEFI diagnostic code and follow the instructions under "User response."

Related Links:

- "Finding the UEFI diagnostic code" on page 521

806f040c-200fffff DIMM 15 Disabled on Subsystem [MemoryElementName].

Explanation: This message is for the use case when an implementation has detected that Memory has been Disabled.

May also be shown as 806f040c200fffff or 0x806f040c200fffff

Severity: Info

Alert Category: System - Other

Serviceable: No

CIM Information: **Prefix:** PLAT and **ID:** 0131

SNMP Trap ID:

Automatically notify Support: No

User response: This is a UEFI detected event. To find the UEFI diagnostic code for this event, in the information center, follow the instructions in "Finding the UEFI diagnostic code" under "UEFI diagnostic codes." Then, in the information center, open the topic for the UEFI diagnostic code and follow the instructions under "User response."

Related Links:

- "Finding the UEFI diagnostic code" on page 521

806f040c-2010ffff DIMM 16 Disabled on Subsystem [MemoryElementName].

Explanation: This message is for the use case when an implementation has detected that Memory has been Disabled.

May also be shown as 806f040c2010ffff or 0x806f040c2010ffff

Severity: Info

Alert Category: System - Other

Serviceable: No

CIM Information: **Prefix:** PLAT and **ID:** 0131

SNMP Trap ID:

Automatically notify Support: No

User response: This is a UEFI detected event. To find the UEFI diagnostic code for this event, in the information center, follow the instructions in "Finding the UEFI diagnostic code" under "UEFI diagnostic codes." Then, in the information center, open the topic for the UEFI diagnostic code and follow the instructions under "User response."

Related Links:

- "Finding the UEFI diagnostic code" on page 521

806f040c-2011ffff DIMM 17 Disabled on Subsystem [MemoryElementName].

Explanation: This message is for the use case when an implementation has detected that Memory has been Disabled.

May also be shown as 806f040c2011ffff or 0x806f040c2011ffff

Severity: Info

Alert Category: System - Other

Serviceable: No

CIM Information: **Prefix:** PLAT and **ID:** 0131

SNMP Trap ID:

Automatically notify Support: No

User response: This is a UEFI detected event. To find the UEFI diagnostic code for this event, in the information center, follow the instructions in "Finding the UEFI diagnostic code" under "UEFI diagnostic codes." Then, in the information center, open the topic for the UEFI diagnostic code and follow the instructions under "User response."

Related Links:

- "Finding the UEFI diagnostic code" on page 521

806f040c-2012ffff DIMM 18 Disabled on Subsystem [MemoryElementName].

Explanation: This message is for the use case when an implementation has detected that Memory has been Disabled.

May also be shown as 806f040c2012ffff or 0x806f040c2012ffff

Severity: Info

Alert Category: System - Other

Serviceable: No

CIM Information: Prefix: PLAT and **ID:** 0131

SNMP Trap ID:

Automatically notify Support: No

User response: This is a UEFI detected event. To find the UEFI diagnostic code for this event, in the information center, follow the instructions in "Finding the UEFI diagnostic code" under "UEFI diagnostic codes." Then, in the information center, open the topic for the UEFI diagnostic code and follow the instructions under "User response."

Related Links:

- “Finding the UEFI diagnostic code” on page 521

806f040c-2013ffff DIMM 19 Disabled on Subsystem [MemoryElementName].

Explanation: This message is for the use case when an implementation has detected that Memory has been Disabled.

May also be shown as 806f040c2013ffff or 0x806f040c2013ffff

Severity: Info

Alert Category: System - Other

Serviceable: No

CIM Information: Prefix: PLAT and **ID:** 0131

SNMP Trap ID:

Automatically notify Support: No

User response: This is a UEFI detected event. To find the UEFI diagnostic code for this event, in the information center, follow the instructions in "Finding the UEFI diagnostic code" under "UEFI diagnostic codes." Then, in the information center, open the topic for the UEFI diagnostic code and follow the instructions under "User response."

Related Links:

- “Finding the UEFI diagnostic code” on page 521

806f040c-2014ffff DIMM 20 Disabled on Subsystem [MemoryElementName].

Explanation: This message is for the use case when an implementation has detected that Memory has been Disabled.

May also be shown as 806f040c2014ffff or 0x806f040c2014ffff

Severity: Info

Alert Category: System - Other

Serviceable: No

CIM Information: Prefix: PLAT and **ID:** 0131

SNMP Trap ID:

Automatically notify Support: No

User response: This is a UEFI detected event. To find the UEFI diagnostic code for this event, in the information

center, follow the instructions in "Finding the UEFI diagnostic code" under "UEFI diagnostic codes." Then, in the information center, open the topic for the UEFI diagnostic code and follow the instructions under "User response."

Related Links:

- "Finding the UEFI diagnostic code" on page 521

806f040c-2015ffff DIMM 21 Disabled on Subsystem [MemoryElementName].

Explanation: This message is for the use case when an implementation has detected that Memory has been Disabled.

May also be shown as 806f040c2015ffff or 0x806f040c2015ffff

Severity: Info

Alert Category: System - Other

Serviceable: No

CIM Information: Prefix: PLAT and **ID:** 0131

SNMP Trap ID:

Automatically notify Support: No

User response: This is a UEFI detected event. To find the UEFI diagnostic code for this event, in the information center, follow the instructions in "Finding the UEFI diagnostic code" under "UEFI diagnostic codes." Then, in the information center, open the topic for the UEFI diagnostic code and follow the instructions under "User response."

Related Links:

- "Finding the UEFI diagnostic code" on page 521

806f040c-2016ffff DIMM 22 Disabled on Subsystem [MemoryElementName].

Explanation: This message is for the use case when an implementation has detected that Memory has been Disabled.

May also be shown as 806f040c2016ffff or 0x806f040c2016ffff

Severity: Info

Alert Category: System - Other

Serviceable: No

CIM Information: Prefix: PLAT and **ID:** 0131

SNMP Trap ID:

Automatically notify Support: No

User response: This is a UEFI detected event. To find the UEFI diagnostic code for this event, in the information center, follow the instructions in "Finding the UEFI diagnostic code" under "UEFI diagnostic codes." Then, in the information center, open the topic for the UEFI diagnostic code and follow the instructions under "User response."

Related Links:

- "Finding the UEFI diagnostic code" on page 521

806f040c-2017ffff DIMM 23 Disabled on Subsystem [MemoryElementName].

Explanation: This message is for the use case when an implementation has detected that Memory has been Disabled.

May also be shown as 806f040c2017ffff or 0x806f040c2017ffff

Severity: Info

Alert Category: System - Other

Serviceable: No

CIM Information: **Prefix:** PLAT and **ID:** 0131

SNMP Trap ID:

Automatically notify Support: No

User response: This is a UEFI detected event. To find the UEFI diagnostic code for this event, in the information center, follow the instructions in "Finding the UEFI diagnostic code" under "UEFI diagnostic codes." Then, in the information center, open the topic for the UEFI diagnostic code and follow the instructions under "User response."

Related Links:

- "Finding the UEFI diagnostic code" on page 521

806f040c-2018ffff DIMM 24 Disabled on Subsystem [MemoryElementName].

Explanation: This message is for the use case when an implementation has detected that Memory has been Disabled.

May also be shown as 806f040c2018ffff or 0x806f040c2018ffff

Severity: Info

Alert Category: System - Other

Serviceable: No

CIM Information: **Prefix:** PLAT and **ID:** 0131

SNMP Trap ID:

Automatically notify Support: No

User response: This is a UEFI detected event. To find the UEFI diagnostic code for this event, in the information center, follow the instructions in "Finding the UEFI diagnostic code" under "UEFI diagnostic codes." Then, in the information center, open the topic for the UEFI diagnostic code and follow the instructions under "User response."

Related Links:

- "Finding the UEFI diagnostic code" on page 521

806f040c-2581ffff [PhysicalMemoryElementName] Disabled on Subsystem [MemoryElementName].

Explanation: This message is for the use case when an implementation has detected that Memory has been Disabled. All DIMMs. One of the DIMMs.

May also be shown as 806f040c2581ffff or 0x806f040c2581ffff

Severity: Info

Alert Category: System - Other

Serviceable: No

CIM Information: **Prefix:** PLAT and **ID:** 0131

SNMP Trap ID:

Automatically notify Support: No

User response: This is a UEFI detected event. To find the UEFI diagnostic code for this event, in the information center, follow the instructions in "Finding the UEFI diagnostic code" under "UEFI diagnostic codes." Then, in the information center, open the topic for the UEFI diagnostic code and follow the instructions under "User response."

Related Links:

- "Finding the UEFI diagnostic code" on page 521

806f0413-2582ffff A PCI PERR has occurred on system [ComputerSystemElementName].

Explanation: This message is for the use case when an implementation has detected a PCI PERR. PCIs :

May also be shown as 806f04132582ffff or 0x806f04132582ffff

Severity: Error

Alert Category: Critical - Other

Serviceable: Yes

CIM Information: Prefix: PLAT and **ID:** 0232

SNMP Trap ID: 50

Automatically notify Support: No

User response: This is a UEFI detected event. To find the UEFI diagnostic code for this event, in the information center, follow the instructions in "Finding the UEFI diagnostic code" under "UEFI diagnostic codes." Then, in the information center, open the topic for the UEFI diagnostic code and follow the instructions under "User response."

Related Links:

- “Finding the UEFI diagnostic code” on page 521

806f0413-2c03ffff A PCI PERR has occurred on system [ComputerSystemElementName].

Explanation: A PCI parity error has been detected in the I/O expansion adapter in PCIe adapter slot 3 in the PCI expansion unit.

May also be shown as 806f04132c03ffff or 0x806f04132c03ffff

Severity: Error

Alert Category: Critical - Other

Serviceable: Yes

CIM Information: Prefix: PLAT and **ID:** 0232

SNMP Trap ID: 50

Automatically notify Support: No

User response: This is a UEFI detected event. To find the UEFI diagnostic code for this event, in the information center, follow the instructions in "Finding the UEFI diagnostic code" under "UEFI diagnostic codes." Then, in the information center, open the topic for the UEFI diagnostic code and follow the instructions under "User response."

Related Links:

- “Finding the UEFI diagnostic code” on page 521

806f0413-2c04ffff A PCI PERR has occurred on system [ComputerSystemElementName].

Explanation: A PCI parity error has been detected in the I/O expansion adapter in PCIe adapter slot 4 in the PCI expansion unit.

May also be shown as 806f04132c04ffff or 0x806f04132c04ffff

Severity: Error

Alert Category: Critical - Other

Serviceable: Yes

CIM Information: Prefix: PLAT and **ID:** 0232

SNMP Trap ID: 50

Automatically notify Support: No

User response: This is a UEFI detected event. To find the UEFI diagnostic code for this event, in the information center, follow the instructions in "Finding the UEFI diagnostic code" under "UEFI diagnostic codes." Then, in the

information center, open the topic for the UEFI diagnostic code and follow the instructions under "User response."

Related Links:

- “Finding the UEFI diagnostic code” on page 521

806f0413-3101ffff A PCI PERR has occurred on system [ComputerSystemElementName].

Explanation: A PCI parity error has been detected in the I/O expansion adapter in PCIe adapter slot 1 in the PCI expansion unit.

May also be shown as 806f04133101ffff or 0x806f04133101ffff

Severity: Error

Alert Category: Critical - Other

Serviceable: Yes

CIM Information: Prefix: PLAT and **ID:** 0232

SNMP Trap ID: 50

Automatically notify Support: No

User response: This is a UEFI detected event. To find the UEFI diagnostic code for this event, in the information center, follow the instructions in "Finding the UEFI diagnostic code" under "UEFI diagnostic codes." Then, in the information center, open the topic for the UEFI diagnostic code and follow the instructions under "User response."

Related Links:

- “Finding the UEFI diagnostic code” on page 521

806f0413-3102ffff A PCI PERR has occurred on system [ComputerSystemElementName].

Explanation: A PCI parity error has been detected in the I/O expansion adapter in PCIe adapter slot 1 in the PCI expansion unit.

May also be shown as 806f04133102ffff or 0x806f04133102ffff

Severity: Error

Alert Category: Critical - Other

Serviceable: Yes

CIM Information: Prefix: PLAT and **ID:** 0232

SNMP Trap ID: 50

Automatically notify Support: No

User response: This is a UEFI detected event. To find the UEFI diagnostic code for this event, in the information center, follow the instructions in "Finding the UEFI diagnostic code" under "UEFI diagnostic codes." Then, in the information center, open the topic for the UEFI diagnostic code and follow the instructions under "User response."

Related Links:

- “Finding the UEFI diagnostic code” on page 521

806f0413-3103ffff A PCI PERR has occurred on system [ComputerSystemElementName].

Explanation: A PCI parity error has been detected in the I/O expansion adapter in PCIe adapter slot 1 in the PCI expansion unit.

May also be shown as 806f04133103ffff or 0x806f04133103ffff

Severity: Error

Alert Category: Critical - Other

Serviceable: Yes

CIM Information: Prefix: PLAT and **ID:** 0232

SNMP Trap ID: 50

Automatically notify Support: No

User response: This is a UEFI detected event. To find the UEFI diagnostic code for this event, in the information center, follow the instructions in "Finding the UEFI diagnostic code" under "UEFI diagnostic codes." Then, in the information center, open the topic for the UEFI diagnostic code and follow the instructions under "User response."

Related Links:

- “Finding the UEFI diagnostic code” on page 521

806f0413-3104ffff A PCI PERR has occurred on system [ComputerSystemElementName].

Explanation: A PCI parity error has been detected in the I/O expansion adapter in PCIe adapter slot 1 in the PCI expansion unit.

May also be shown as 806f04133104ffff or 0x806f04133104ffff

Severity: Error

Alert Category: Critical - Other

Serviceable: Yes

CIM Information: Prefix: PLAT and **ID:** 0232

SNMP Trap ID: 50

Automatically notify Support: No

User response: This is a UEFI detected event. To find the UEFI diagnostic code for this event, in the information center, follow the instructions in "Finding the UEFI diagnostic code" under "UEFI diagnostic codes." Then, in the information center, open the topic for the UEFI diagnostic code and follow the instructions under "User response."

Related Links:

- “Finding the UEFI diagnostic code” on page 521

806f0507-0301ffff CPU 1 has a Configuration Mismatch.

Explanation: This message is for the use case when an implementation has detected a Processor Configuration Mismatch has occurred.

May also be shown as 806f05070301ffff or 0x806f05070301ffff

Severity: Error

Alert Category: Critical - CPU

Serviceable: Yes

CIM Information: Prefix: PLAT and **ID:** 0062

SNMP Trap ID: 40

Automatically notify Support: No

User response: This is a UEFI detected event. To find the UEFI diagnostic code for this event, in the information center, follow the instructions in "Finding the UEFI diagnostic code" under "UEFI diagnostic codes." Then, in the information center, open the topic for the UEFI diagnostic code and follow the instructions under "User response."

Related Links:

- “Finding the UEFI diagnostic code” on page 521

806f0507-0302ffff CPU 2 has a Configuration Mismatch.

Explanation: This message is for the use case when an implementation has detected a Processor Configuration Mismatch has occurred.

May also be shown as 806f05070302ffff or 0x806f05070302ffff

Severity: Error

Alert Category: Critical - CPU

Serviceable: Yes

CIM Information: **Prefix:** PLAT and **ID:** 0062

SNMP Trap ID: 40

Automatically notify Support: No

User response: This is a UEFI detected event. To find the UEFI diagnostic code for this event, in the information center, follow the instructions in "Finding the UEFI diagnostic code" under "UEFI diagnostic codes." Then, in the information center, open the topic for the UEFI diagnostic code and follow the instructions under "User response."

Related Links:

- "Finding the UEFI diagnostic code" on page 521

806f0507-2584ffff [ProcessorElementName] has a Configuration Mismatch.

Explanation: This message is for the use case when an implementation has detected a Processor Configuration Mismatch has occurred. (It might be All CPUs or One of CPUs as well)

May also be shown as 806f05072584ffff or 0x806f05072584ffff

Severity: Error

Alert Category: Critical - CPU

Serviceable: Yes

CIM Information: **Prefix:** PLAT and **ID:** 0062

SNMP Trap ID: 40

Automatically notify Support: No

User response: This is a UEFI detected event. To find the UEFI diagnostic code for this event, in the information center, follow the instructions in "Finding the UEFI diagnostic code" under "UEFI diagnostic codes." Then, in the information center, open the topic for the UEFI diagnostic code and follow the instructions under "User response."

Related Links:

- "Finding the UEFI diagnostic code" on page 521

806f050c-2001ffff Memory Logging Limit Reached for DIMM 1 on Subsystem [MemoryElementName].

Explanation: This message is for the use case when an implementation has detected that the Memory Logging Limit has been Reached.

May also be shown as 806f050c2001ffff or 0x806f050c2001ffff

Severity: Warning

Alert Category: Critical - Memory

Serviceable: Yes

CIM Information: **Prefix:** PLAT and **ID:** 0144

SNMP Trap ID: 41

Automatically notify Support: Yes

User response: This is a UEFI detected event. To find the UEFI diagnostic code for this event, in the information center, follow the instructions in "Finding the UEFI diagnostic code" under "UEFI diagnostic codes." Then, in the information center, open the topic for the UEFI diagnostic code and follow the instructions under "User response."

Related Links:

- "Finding the UEFI diagnostic code" on page 521

806f050c-2002ffff Memory Logging Limit Reached for DIMM 2 on Subsystem [MemoryElementName].

Explanation: This message is for the use case when an implementation has detected that the Memory Logging Limit has been Reached.

May also be shown as 806f050c2002ffff or 0x806f050c2002ffff

Severity: Warning

Alert Category: Critical - Memory

Serviceable: Yes

CIM Information: Prefix: PLAT and **ID:** 0144

SNMP Trap ID: 41

Automatically notify Support: Yes

User response: This is a UEFI detected event. To find the UEFI diagnostic code for this event, in the information center, follow the instructions in "Finding the UEFI diagnostic code" under "UEFI diagnostic codes." Then, in the information center, open the topic for the UEFI diagnostic code and follow the instructions under "User response."

Related Links:

- "Finding the UEFI diagnostic code" on page 521

806f050c-2003ffff Memory Logging Limit Reached for DIMM 3 on Subsystem [MemoryElementName].

Explanation: This message is for the use case when an implementation has detected that the Memory Logging Limit has been Reached.

May also be shown as 806f050c2003ffff or 0x806f050c2003ffff

Severity: Warning

Alert Category: Critical - Memory

Serviceable: Yes

CIM Information: Prefix: PLAT and **ID:** 0144

SNMP Trap ID: 41

Automatically notify Support: Yes

User response: This is a UEFI detected event. To find the UEFI diagnostic code for this event, in the information center, follow the instructions in "Finding the UEFI diagnostic code" under "UEFI diagnostic codes." Then, in the information center, open the topic for the UEFI diagnostic code and follow the instructions under "User response."

Related Links:

- "Finding the UEFI diagnostic code" on page 521

806f050c-2004ffff Memory Logging Limit Reached for DIMM 4 on Subsystem [MemoryElementName].

Explanation: This message is for the use case when an implementation has detected that the Memory Logging Limit has been Reached.

May also be shown as 806f050c2004ffff or 0x806f050c2004ffff

Severity: Warning

Alert Category: Critical - Memory

Serviceable: Yes

CIM Information: Prefix: PLAT and **ID:** 0144

SNMP Trap ID: 41

Automatically notify Support: Yes

User response: This is a UEFI detected event. To find the UEFI diagnostic code for this event, in the information

center, follow the instructions in "Finding the UEFI diagnostic code" under "UEFI diagnostic codes." Then, in the information center, open the topic for the UEFI diagnostic code and follow the instructions under "User response."

Related Links:

- "Finding the UEFI diagnostic code" on page 521

806f050c-2005ffff Memory Logging Limit Reached for DIMM 5 on Subsystem [MemoryElementName].

Explanation: This message is for the use case when an implementation has detected that the Memory Logging Limit has been Reached.

May also be shown as 806f050c2005ffff or 0x806f050c2005ffff

Severity: Warning

Alert Category: Critical - Memory

Serviceable: Yes

CIM Information: Prefix: PLAT and **ID:** 0144

SNMP Trap ID: 41

Automatically notify Support: Yes

User response: This is a UEFI detected event. To find the UEFI diagnostic code for this event, in the information center, follow the instructions in "Finding the UEFI diagnostic code" under "UEFI diagnostic codes." Then, in the information center, open the topic for the UEFI diagnostic code and follow the instructions under "User response."

Related Links:

- "Finding the UEFI diagnostic code" on page 521

806f050c-2006ffff Memory Logging Limit Reached for DIMM 6 on Subsystem [MemoryElementName].

Explanation: This message is for the use case when an implementation has detected that the Memory Logging Limit has been Reached.

May also be shown as 806f050c2006ffff or 0x806f050c2006ffff

Severity: Warning

Alert Category: Critical - Memory

Serviceable: Yes

CIM Information: Prefix: PLAT and **ID:** 0144

SNMP Trap ID: 41

Automatically notify Support: Yes

User response: This is a UEFI detected event. To find the UEFI diagnostic code for this event, in the information center, follow the instructions in "Finding the UEFI diagnostic code" under "UEFI diagnostic codes." Then, in the information center, open the topic for the UEFI diagnostic code and follow the instructions under "User response."

Related Links:

- "Finding the UEFI diagnostic code" on page 521

806f050c-2007ffff Memory Logging Limit Reached for DIMM 7 on Subsystem [MemoryElementName].

Explanation: This message is for the use case when an implementation has detected that the Memory Logging Limit has been Reached.

May also be shown as 806f050c2007ffff or 0x806f050c2007ffff

Severity: Warning

Alert Category: Critical - Memory

Serviceable: Yes

CIM Information: **Prefix:** PLAT and **ID:** 0144

SNMP Trap ID: 41

Automatically notify Support: Yes

User response: This is a UEFI detected event. To find the UEFI diagnostic code for this event, in the information center, follow the instructions in "Finding the UEFI diagnostic code" under "UEFI diagnostic codes." Then, in the information center, open the topic for the UEFI diagnostic code and follow the instructions under "User response."

Related Links:

- "Finding the UEFI diagnostic code" on page 521

806f050c-2008ffff Memory Logging Limit Reached for DIMM 8 on Subsystem [MemoryElementName].

Explanation: This message is for the use case when an implementation has detected that the Memory Logging Limit has been Reached.

May also be shown as 806f050c2008ffff or 0x806f050c2008ffff

Severity: Warning

Alert Category: Critical - Memory

Serviceable: Yes

CIM Information: **Prefix:** PLAT and **ID:** 0144

SNMP Trap ID: 41

Automatically notify Support: Yes

User response: This is a UEFI detected event. To find the UEFI diagnostic code for this event, in the information center, follow the instructions in "Finding the UEFI diagnostic code" under "UEFI diagnostic codes." Then, in the information center, open the topic for the UEFI diagnostic code and follow the instructions under "User response."

Related Links:

- "Finding the UEFI diagnostic code" on page 521

806f050c-2009ffff Memory Logging Limit Reached for DIMM 9 on Subsystem [MemoryElementName].

Explanation: This message is for the use case when an implementation has detected that the Memory Logging Limit has been Reached.

May also be shown as 806f050c2009ffff or 0x806f050c2009ffff

Severity: Warning

Alert Category: Critical - Memory

Serviceable: Yes

CIM Information: **Prefix:** PLAT and **ID:** 0144

SNMP Trap ID: 41

Automatically notify Support: Yes

User response: This is a UEFI detected event. To find the UEFI diagnostic code for this event, in the information center, follow the instructions in "Finding the UEFI diagnostic code" under "UEFI diagnostic codes." Then, in the information center, open the topic for the UEFI diagnostic code and follow the instructions under "User response."

Related Links:

- "Finding the UEFI diagnostic code" on page 521

806f050c-200affff Memory Logging Limit Reached for DIMM 10 on Subsystem [MemoryElementName].

Explanation: This message is for the use case when an implementation has detected that the Memory Logging Limit has been Reached.

May also be shown as 806f050c200affff or 0x806f050c200affff

Severity: Warning

Alert Category: Critical - Memory

Serviceable: Yes

CIM Information: Prefix: PLAT and **ID:** 0144

SNMP Trap ID: 41

Automatically notify Support: Yes

User response: This is a UEFI detected event. To find the UEFI diagnostic code for this event, in the information center, follow the instructions in "Finding the UEFI diagnostic code" under "UEFI diagnostic codes." Then, in the information center, open the topic for the UEFI diagnostic code and follow the instructions under "User response."

Related Links:

- "Finding the UEFI diagnostic code" on page 521

806f050c-200bffff Memory Logging Limit Reached for DIMM 11 on Subsystem [MemoryElementName].

Explanation: This message is for the use case when an implementation has detected that the Memory Logging Limit has been Reached.

May also be shown as 806f050c200bffff or 0x806f050c200bffff

Severity: Warning

Alert Category: Critical - Memory

Serviceable: Yes

CIM Information: Prefix: PLAT and **ID:** 0144

SNMP Trap ID: 41

Automatically notify Support: Yes

User response: This is a UEFI detected event. To find the UEFI diagnostic code for this event, in the information center, follow the instructions in "Finding the UEFI diagnostic code" under "UEFI diagnostic codes." Then, in the information center, open the topic for the UEFI diagnostic code and follow the instructions under "User response."

Related Links:

- "Finding the UEFI diagnostic code" on page 521

806f050c-200cffff Memory Logging Limit Reached for DIMM 12 on Subsystem [MemoryElementName].

Explanation: This message is for the use case when an implementation has detected that the Memory Logging Limit has been Reached.

May also be shown as 806f050c200cffff or 0x806f050c200cffff

Severity: Warning

Alert Category: Critical - Memory

Serviceable: Yes

CIM Information: Prefix: PLAT and **ID:** 0144

SNMP Trap ID: 41

Automatically notify Support: Yes

User response: This is a UEFI detected event. To find the UEFI diagnostic code for this event, in the information

center, follow the instructions in "Finding the UEFI diagnostic code" under "UEFI diagnostic codes." Then, in the information center, open the topic for the UEFI diagnostic code and follow the instructions under "User response."

Related Links:

• "Finding the UEFI diagnostic code" on page 521

806f050c-200dffff Memory Logging Limit Reached for DIMM 13 on Subsystem [MemoryElementName].

Explanation: This message is for the use case when an implementation has detected that the Memory Logging Limit has been Reached.

May also be shown as 806f050c200dffff or 0x806f050c200dffff

Severity: Warning

Alert Category: Critical - Memory

Serviceable: Yes

CIM Information: Prefix: PLAT and **ID:** 0144

SNMP Trap ID: 41

Automatically notify Support: Yes

User response: This is a UEFI detected event. To find the UEFI diagnostic code for this event, in the information center, follow the instructions in "Finding the UEFI diagnostic code" under "UEFI diagnostic codes." Then, in the information center, open the topic for the UEFI diagnostic code and follow the instructions under "User response."

Related Links:

• "Finding the UEFI diagnostic code" on page 521

806f050c-200effff Memory Logging Limit Reached for DIMM 14 on Subsystem [MemoryElementName].

Explanation: This message is for the use case when an implementation has detected that the Memory Logging Limit has been Reached.

May also be shown as 806f050c200effff or 0x806f050c200effff

Severity: Warning

Alert Category: Critical - Memory

Serviceable: Yes

CIM Information: Prefix: PLAT and **ID:** 0144

SNMP Trap ID: 41

Automatically notify Support: Yes

User response: This is a UEFI detected event. To find the UEFI diagnostic code for this event, in the information center, follow the instructions in "Finding the UEFI diagnostic code" under "UEFI diagnostic codes." Then, in the information center, open the topic for the UEFI diagnostic code and follow the instructions under "User response."

Related Links:

• "Finding the UEFI diagnostic code" on page 521

806f050c-200fffff Memory Logging Limit Reached for DIMM 15 on Subsystem [MemoryElementName].

Explanation: This message is for the use case when an implementation has detected that the Memory Logging Limit has been Reached.

May also be shown as 806f050c200fffff or 0x806f050c200fffff

Severity: Warning

Alert Category: Critical - Memory

Serviceable: Yes

CIM Information: **Prefix:** PLAT and **ID:** 0144

SNMP Trap ID: 41

Automatically notify Support: Yes

User response: This is a UEFI detected event. To find the UEFI diagnostic code for this event, in the information center, follow the instructions in "Finding the UEFI diagnostic code" under "UEFI diagnostic codes." Then, in the information center, open the topic for the UEFI diagnostic code and follow the instructions under "User response."

Related Links:

- "Finding the UEFI diagnostic code" on page 521

806f050c-2010ffff Memory Logging Limit Reached for DIMM 16 on Subsystem [MemoryElementName].

Explanation: This message is for the use case when an implementation has detected that the Memory Logging Limit has been Reached.

May also be shown as 806f050c2010ffff or 0x806f050c2010ffff

Severity: Warning

Alert Category: Critical - Memory

Serviceable: Yes

CIM Information: **Prefix:** PLAT and **ID:** 0144

SNMP Trap ID: 41

Automatically notify Support: Yes

User response: This is a UEFI detected event. To find the UEFI diagnostic code for this event, in the information center, follow the instructions in "Finding the UEFI diagnostic code" under "UEFI diagnostic codes." Then, in the information center, open the topic for the UEFI diagnostic code and follow the instructions under "User response."

Related Links:

- "Finding the UEFI diagnostic code" on page 521

806f050c-2011ffff Memory Logging Limit Reached for DIMM 17 on Subsystem [MemoryElementName].

Explanation: This message is for the use case when an implementation has detected that the Memory Logging Limit has been Reached.

May also be shown as 806f050c2011ffff or 0x806f050c2011ffff

Severity: Warning

Alert Category: Critical - Memory

Serviceable: Yes

CIM Information: **Prefix:** PLAT and **ID:** 0144

SNMP Trap ID: 41

Automatically notify Support: Yes

User response: This is a UEFI detected event. To find the UEFI diagnostic code for this event, in the information center, follow the instructions in "Finding the UEFI diagnostic code" under "UEFI diagnostic codes." Then, in the information center, open the topic for the UEFI diagnostic code and follow the instructions under "User response."

Related Links:

- "Finding the UEFI diagnostic code" on page 521

806f050c-2012ffff Memory Logging Limit Reached for DIMM 18 on Subsystem [MemoryElementName].

Explanation: This message is for the use case when an implementation has detected that the Memory Logging Limit has been Reached.

May also be shown as 806f050c2012ffff or 0x806f050c2012ffff

Severity: Warning

Alert Category: Critical - Memory

Serviceable: Yes

CIM Information: Prefix: PLAT and **ID:** 0144

SNMP Trap ID: 41

Automatically notify Support: Yes

User response: This is a UEFI detected event. To find the UEFI diagnostic code for this event, in the information center, follow the instructions in "Finding the UEFI diagnostic code" under "UEFI diagnostic codes." Then, in the information center, open the topic for the UEFI diagnostic code and follow the instructions under "User response."

Related Links:

- "Finding the UEFI diagnostic code" on page 521

806f050c-2013ffff Memory Logging Limit Reached for DIMM 19 on Subsystem [MemoryElementName].

Explanation: This message is for the use case when an implementation has detected that the Memory Logging Limit has been Reached.

May also be shown as 806f050c2013ffff or 0x806f050c2013ffff

Severity: Warning

Alert Category: Critical - Memory

Serviceable: Yes

CIM Information: Prefix: PLAT and **ID:** 0144

SNMP Trap ID: 41

Automatically notify Support: Yes

User response: This is a UEFI detected event. To find the UEFI diagnostic code for this event, in the information center, follow the instructions in "Finding the UEFI diagnostic code" under "UEFI diagnostic codes." Then, in the information center, open the topic for the UEFI diagnostic code and follow the instructions under "User response."

Related Links:

- "Finding the UEFI diagnostic code" on page 521

806f050c-2014ffff Memory Logging Limit Reached for DIMM 20 on Subsystem [MemoryElementName].

Explanation: This message is for the use case when an implementation has detected that the Memory Logging Limit has been Reached.

May also be shown as 806f050c2014ffff or 0x806f050c2014ffff

Severity: Warning

Alert Category: Critical - Memory

Serviceable: Yes

CIM Information: Prefix: PLAT and **ID:** 0144

SNMP Trap ID: 41

Automatically notify Support: Yes

User response: This is a UEFI detected event. To find the UEFI diagnostic code for this event, in the information

center, follow the instructions in "Finding the UEFI diagnostic code" under "UEFI diagnostic codes." Then, in the information center, open the topic for the UEFI diagnostic code and follow the instructions under "User response."

Related Links:

- "Finding the UEFI diagnostic code" on page 521

806f050c-2015ffff Memory Logging Limit Reached for DIMM 21 on Subsystem [MemoryElementName].

Explanation: This message is for the use case when an implementation has detected that the Memory Logging Limit has been Reached.

May also be shown as 806f050c2015ffff or 0x806f050c2015ffff

Severity: Warning

Alert Category: Critical - Memory

Serviceable: Yes

CIM Information: Prefix: PLAT and **ID:** 0144

SNMP Trap ID: 41

Automatically notify Support: Yes

User response: This is a UEFI detected event. To find the UEFI diagnostic code for this event, in the information center, follow the instructions in "Finding the UEFI diagnostic code" under "UEFI diagnostic codes." Then, in the information center, open the topic for the UEFI diagnostic code and follow the instructions under "User response."

Related Links:

- "Finding the UEFI diagnostic code" on page 521

806f050c-2016ffff Memory Logging Limit Reached for DIMM 22 on Subsystem [MemoryElementName].

Explanation: This message is for the use case when an implementation has detected that the Memory Logging Limit has been Reached.

May also be shown as 806f050c2016ffff or 0x806f050c2016ffff

Severity: Warning

Alert Category: Critical - Memory

Serviceable: Yes

CIM Information: Prefix: PLAT and **ID:** 0144

SNMP Trap ID: 41

Automatically notify Support: Yes

User response: This is a UEFI detected event. To find the UEFI diagnostic code for this event, in the information center, follow the instructions in "Finding the UEFI diagnostic code" under "UEFI diagnostic codes." Then, in the information center, open the topic for the UEFI diagnostic code and follow the instructions under "User response."

Related Links:

- "Finding the UEFI diagnostic code" on page 521

806f050c-2017ffff Memory Logging Limit Reached for DIMM 23 on Subsystem [MemoryElementName].

Explanation: This message is for the use case when an implementation has detected that the Memory Logging Limit has been Reached.

May also be shown as 806f050c2017ffff or 0x806f050c2017ffff

Severity: Warning

Alert Category: Critical - Memory

Serviceable: Yes

CIM Information: **Prefix:** PLAT and **ID:** 0144

SNMP Trap ID: 41

Automatically notify Support: Yes

User response: This is a UEFI detected event. To find the UEFI diagnostic code for this event, in the information center, follow the instructions in "Finding the UEFI diagnostic code" under "UEFI diagnostic codes." Then, in the information center, open the topic for the UEFI diagnostic code and follow the instructions under "User response."

Related Links:

- "Finding the UEFI diagnostic code" on page 521

806f050c-2018ffff Memory Logging Limit Reached for DIMM 24 on Subsystem [MemoryElementName].

Explanation: This message is for the use case when an implementation has detected that the Memory Logging Limit has been Reached.

May also be shown as 806f050c2018ffff or 0x806f050c2018ffff

Severity: Warning

Alert Category: Critical - Memory

Serviceable: Yes

CIM Information: **Prefix:** PLAT and **ID:** 0144

SNMP Trap ID: 41

Automatically notify Support: Yes

User response: This is a UEFI detected event. To find the UEFI diagnostic code for this event, in the information center, follow the instructions in "Finding the UEFI diagnostic code" under "UEFI diagnostic codes." Then, in the information center, open the topic for the UEFI diagnostic code and follow the instructions under "User response."

Related Links:

- "Finding the UEFI diagnostic code" on page 521

806f050c-2581ffff Memory Logging Limit Reached for [PhysicalMemoryElementName] on Subsystem [MemoryElementName].

Explanation: This message is for the use case when an implementation has detected that the Memory Logging Limit has been Reached. All DIMMs. One of the DIMMs.

May also be shown as 806f050c2581ffff or 0x806f050c2581ffff

Severity: Warning

Alert Category: Critical - Memory

Serviceable: Yes

CIM Information: **Prefix:** PLAT and **ID:** 0144

SNMP Trap ID: 41

Automatically notify Support: Yes

User response: This is a UEFI detected event. To find the UEFI diagnostic code for this event, in the information center, follow the instructions in "Finding the UEFI diagnostic code" under "UEFI diagnostic codes." Then, in the information center, open the topic for the UEFI diagnostic code and follow the instructions under "User response."

Related Links:

- "Finding the UEFI diagnostic code" on page 521

806f050d-0400ffff Array [ComputerSystemElementName] is in critical condition.

Explanation: The RAID array is in critical condition. Immediate action is required to avoid a system outage.

May also be shown as 806f050d0400ffff or 0x806f050d0400ffff

Severity: Warning

Alert Category: Critical - Hard Disk drive

Serviceable: Yes

CIM Information: Prefix: PLAT and **ID:** 0174

SNMP Trap ID: 5

Automatically notify Support: No

User response: Replace the hard disk drive that is indicated by a lit status LED.

806f050d-0401ffff Array [ComputerSystemElementName] is in critical condition.

Explanation: The RAID array is in critical condition. Immediate action is required to avoid a system outage.

May also be shown as 806f050d0401ffff or 0x806f050d0401ffff

Severity: Error

Alert Category: Critical - Hard Disk drive

Serviceable: Yes

CIM Information: Prefix: PLAT and **ID:** 0174

SNMP Trap ID: 5

Automatically notify Support: No

User response: Replace the hard disk drive that is indicated by a lit status LED.

806f050d-0402ffff Array [ComputerSystemElementName] is in critical condition.

Explanation: The RAID array is in critical condition. Immediate action is required to avoid a system outage.

May also be shown as 806f050d0402ffff or 0x806f050d0402ffff

Severity: Error

Alert Category: Critical - Hard Disk drive

Serviceable: Yes

CIM Information: Prefix: PLAT and **ID:** 0174

SNMP Trap ID: 5

Automatically notify Support: No

User response: Replace the hard disk drive that is indicated by a lit status LED.

806f050d-0403ffff Array [ComputerSystemElementName] is in critical condition.

Explanation: The RAID array is in critical condition. Immediate action is required to avoid a system outage.

May also be shown as 806f050d0403ffff or 0x806f050d0403ffff

Severity: Error

Alert Category: Critical - Hard Disk drive

Serviceable: Yes

CIM Information: Prefix: PLAT and **ID:** 0174

SNMP Trap ID: 5

Automatically notify Support: No

User response: Replace the hard disk drive that is indicated by a lit status LED.

806f050d-0404ffff Array [ComputerSystemElementName] is in critical condition.

Explanation: The RAID array is in critical condition. Immediate action is required to avoid a system outage.

May also be shown as 806f050d0404ffff or 0x806f050d0404ffff

Severity: Error

Alert Category: Critical - Hard Disk drive

Serviceable: Yes

CIM Information: Prefix: PLAT and **ID:** 0174

SNMP Trap ID: 5

Automatically notify Support: No

User response: Replace the hard disk drive that is indicated by a lit status LED.

806f050d-0405ffff Array [ComputerSystemElementName] is in critical condition.

Explanation: The RAID array is in critical condition. Immediate action is required to avoid a system outage.

May also be shown as 806f050d0405ffff or 0x806f050d0405ffff

Severity: Error

Alert Category: Critical - Hard Disk drive

Serviceable: Yes

CIM Information: Prefix: PLAT and **ID:** 0174

SNMP Trap ID: 5

Automatically notify Support: No

User response: Replace the hard disk drive that is indicated by a lit status LED.

806f050d-0406ffff Array [ComputerSystemElementName] is in critical condition.

Explanation: The RAID array is in critical condition. Immediate action is required to avoid a system outage.

May also be shown as 806f050d0406ffff or 0x806f050d0406ffff

Severity: Error

Alert Category: Critical - Hard Disk drive

Serviceable: Yes

CIM Information: Prefix: PLAT and **ID:** 0174

SNMP Trap ID: 5

Automatically notify Support: No

User response: Replace the hard disk drive that is indicated by a lit status LED.

806f050d-0407ffff Array [ComputerSystemElementName] is in critical condition.

Explanation: The RAID array is in critical condition. Immediate action is required to avoid a system outage.

May also be shown as 806f050d0407ffff or 0x806f050d0407ffff

Severity: Error

Alert Category: Critical - Hard Disk drive

Serviceable: Yes

CIM Information: **Prefix:** PLAT and **ID:** 0174

SNMP Trap ID: 5

Automatically notify Support: No

User response: Replace the hard disk drive that is indicated by a lit status LED.

806f050d-0408ffff Array [ComputerSystemElementName] is in critical condition.

Explanation: The RAID array is in critical condition. Immediate action is required to avoid a system outage.

May also be shown as 806f050d0408ffff or 0x806f050d0408ffff

Severity: Error

Alert Category: Critical - Hard Disk drive

Serviceable: Yes

CIM Information: **Prefix:** PLAT and **ID:** 0174

SNMP Trap ID: 5

Automatically notify Support: No

User response: Replace the hard disk drive that is indicated by a lit status LED.

806f050d-0409ffff Array [ComputerSystemElementName] is in critical condition.

Explanation: The RAID array is in critical condition. Immediate action is required to avoid a system outage.

May also be shown as 806f050d0409ffff or 0x806f050d0409ffff

Severity: Error

Alert Category: Critical - Hard Disk drive

Serviceable: Yes

CIM Information: **Prefix:** PLAT and **ID:** 0174

SNMP Trap ID: 5

Automatically notify Support: No

User response: Replace the hard disk drive that is indicated by a lit status LED.

806f050d-040affff Array [ComputerSystemElementName] is in critical condition.

Explanation: The RAID array is in critical condition. Immediate action is required to avoid a system outage.

May also be shown as 806f050d040affff or 0x806f050d040affff

Severity: Error

Alert Category: Critical - Hard Disk drive

Serviceable: Yes

CIM Information: **Prefix:** PLAT and **ID:** 0174

SNMP Trap ID: 5

Automatically notify Support: No

User response: Replace the hard disk drive that is indicated by a lit status LED.

806f050d-040bffff Array [ComputerSystemElementName] is in critical condition.

Explanation: The RAID array is in critical condition. Immediate action is required to avoid a system outage.

May also be shown as 806f050d040bffff or 0x806f050d040bffff

Severity: Error

Alert Category: Critical - Hard Disk drive

Serviceable: Yes

CIM Information: Prefix: PLAT and **ID:** 0174

SNMP Trap ID: 5

Automatically notify Support: No

User response: Replace the hard disk drive that is indicated by a lit status LED.

806f050d-040cffff Array [ComputerSystemElementName] is in critical condition.

Explanation: The RAID array is in critical condition. Immediate action is required to avoid a system outage.

May also be shown as 806f050d040cffff or 0x806f050d040cffff

Severity: Error

Alert Category: Critical - Hard Disk drive

Serviceable: Yes

CIM Information: Prefix: PLAT and **ID:** 0174

SNMP Trap ID: 5

Automatically notify Support: No

User response: Replace the hard disk drive that is indicated by a lit status LED.

806f050d-040dffff Array [ComputerSystemElementName] is in critical condition.

Explanation: The RAID array is in critical condition. Immediate action is required to avoid a system outage.

May also be shown as 806f050d040dffff or 0x806f050d040dffff

Severity: Error

Alert Category: Critical - Hard Disk drive

Serviceable: Yes

CIM Information: Prefix: PLAT and **ID:** 0174

SNMP Trap ID: 5

Automatically notify Support: No

User response: Replace the hard disk drive that is indicated by a lit status LED.

806f050d-040effff Array [ComputerSystemElementName] is in critical condition.

Explanation: The RAID array is in critical condition. Immediate action is required to avoid a system outage.

May also be shown as 806f050d040effff or 0x806f050d040effff

Severity: Error

Alert Category: Critical - Hard Disk drive

Serviceable: Yes

CIM Information: Prefix: PLAT and **ID:** 0174

SNMP Trap ID: 5

Automatically notify Support: No

User response: Replace the hard disk drive that is indicated by a lit status LED.

806f050d-040fffff Array [ComputerSystemElementName] is in critical condition.

Explanation: The RAID array is in critical condition. Immediate action is required to avoid a system outage.

May also be shown as 806f050d040fffff or 0x806f050d040fffff

Severity: Error

Alert Category: Critical - Hard Disk drive

Serviceable: Yes

CIM Information: Prefix: PLAT and **ID:** 0174

SNMP Trap ID: 5

Automatically notify Support: No

User response: Replace the hard disk drive that is indicated by a lit status LED.

806f050d-0410ffff Array [ComputerSystemElementName] is in critical condition.

Explanation: The RAID array is in critical condition. Immediate action is required to avoid a system outage.

May also be shown as 806f050d0410ffff or 0x806f050d0410ffff

Severity: Error

Alert Category: Critical - Hard Disk drive

Serviceable: Yes

CIM Information: Prefix: PLAT and **ID:** 0174

SNMP Trap ID: 5

Automatically notify Support: No

User response: Replace the hard disk drive that is indicated by a lit status LED.

806f050d-0411ffff Array [ComputerSystemElementName] is in critical condition.

Explanation: The RAID array is in critical condition. Immediate action is required to avoid a system outage.

May also be shown as 806f050d0411ffff or 0x806f050d0411ffff

Severity: Error

Alert Category: Critical - Hard Disk drive

Serviceable: Yes

CIM Information: Prefix: PLAT and **ID:** 0174

SNMP Trap ID: 5

Automatically notify Support: No

User response: Replace the hard disk drive that is indicated by a lit status LED.

806f050d-0412ffff Array [ComputerSystemElementName] is in critical condition.

Explanation: The RAID array is in critical condition. Immediate action is required to avoid a system outage.

May also be shown as 806f050d0412ffff or 0x806f050d0412ffff

Severity: Error

Alert Category: Critical - Hard Disk drive

Serviceable: Yes

CIM Information: **Prefix:** PLAT and **ID:** 0174

SNMP Trap ID: 5

Automatically notify Support: No

User response: Replace the hard disk drive that is indicated by a lit status LED.

806f050d-0413ffff Array [ComputerSystemElementName] is in critical condition.

Explanation: The RAID array is in critical condition. Immediate action is required to avoid a system outage.

May also be shown as 806f050d0413ffff or 0x806f050d0413ffff

Severity: Error

Alert Category: Critical - Hard Disk drive

Serviceable: Yes

CIM Information: **Prefix:** PLAT and **ID:** 0174

SNMP Trap ID: 5

Automatically notify Support: No

User response: Replace the hard disk drive that is indicated by a lit status LED.

806f0513-2582ffff A PCI SERR has occurred on system [ComputerSystemElementName].

Explanation: This message is for the use case when an implementation has detected a PCI SERR. PCIs :

May also be shown as 806f05132582ffff or 0x806f05132582ffff

Severity: Error

Alert Category: Critical - Other

Serviceable: Yes

CIM Information: **Prefix:** PLAT and **ID:** 0234

SNMP Trap ID: 50

Automatically notify Support: No

User response: This is a UEFI detected event. To find the UEFI diagnostic code for this event, in the information center, follow the instructions in "Finding the UEFI diagnostic code" under "UEFI diagnostic codes." Then, in the information center, open the topic for the UEFI diagnostic code and follow the instructions under "User response."

Related Links:

- “Finding the UEFI diagnostic code” on page 521

806f0513-2c03ffff A PCI SERR has occurred on system [ComputerSystemElementName].

Explanation: A PCI system error has been detected in the I/O expansion adapter in PCIe adapter slot 3 in the PCI expansion unit.

May also be shown as 806f05132c03ffff or 0x806f05132c03ffff

Severity: Error

Alert Category: Critical - Other

Serviceable: Yes

CIM Information: **Prefix:** PLAT and **ID:** 0234

SNMP Trap ID: 50

Automatically notify Support: No

User response: This is a UEFI detected event. To find the UEFI diagnostic code for this event, in the information center, follow the instructions in "Finding the UEFI diagnostic code" under "UEFI diagnostic codes." Then, in the information center, open the topic for the UEFI diagnostic code and follow the instructions under "User response."

Related Links:

- “Finding the UEFI diagnostic code” on page 521

806f0513-2c04ffff A PCI SERR has occurred on system [ComputerSystemElementName].

Explanation: A PCI system error has been detected in the I/O expansion adapter in PCIe adapter slot 4 in the PCI expansion unit.

May also be shown as 806f05132c04ffff or 0x806f05132c04ffff

Severity: Error

Alert Category: Critical - Other

Serviceable: Yes

CIM Information: Prefix: PLAT and **ID:** 0234

SNMP Trap ID: 50

Automatically notify Support: No

User response: This is a UEFI detected event. To find the UEFI diagnostic code for this event, in the information center, follow the instructions in "Finding the UEFI diagnostic code" under "UEFI diagnostic codes." Then, in the information center, open the topic for the UEFI diagnostic code and follow the instructions under "User response."

Related Links:

- “Finding the UEFI diagnostic code” on page 521

806f0513-3101ffff A PCI SERR has occurred on system [ComputerSystemElementName].

Explanation: A PCI system error has been detected in the I/O expansion adapter in PCIe adapter slot 1 in the PCI expansion unit.

May also be shown as 806f05133101ffff or 0x806f05133101ffff

Severity: Error

Alert Category: Critical - Other

Serviceable: Yes

CIM Information: Prefix: PLAT and **ID:** 0234

SNMP Trap ID: 50

Automatically notify Support: No

User response: This is a UEFI detected event. To find the UEFI diagnostic code for this event, in the information center, follow the instructions in "Finding the UEFI diagnostic code" under "UEFI diagnostic codes." Then, in the information center, open the topic for the UEFI diagnostic code and follow the instructions under "User response."

Related Links:

- “Finding the UEFI diagnostic code” on page 521

806f0513-3102ffff A PCI SERR has occurred on system [ComputerSystemElementName].

Explanation: A PCI system error has been detected in the I/O expansion adapter in PCIe adapter slot 2 in the PCI expansion unit.

May also be shown as 806f05133102ffff or 0x806f05133102ffff

Severity: Error

Alert Category: Critical - Other

Serviceable: Yes

CIM Information: **Prefix:** PLAT and **ID:** 0234

SNMP Trap ID: 50

Automatically notify Support: No

User response: This is a UEFI detected event. To find the UEFI diagnostic code for this event, in the information center, follow the instructions in "Finding the UEFI diagnostic code" under "UEFI diagnostic codes." Then, in the information center, open the topic for the UEFI diagnostic code and follow the instructions under "User response."

Related Links:

- “Finding the UEFI diagnostic code” on page 521

806f0513-3103ffff A PCI SERR has occurred on system [ComputerSystemElementName].

Explanation: A PCI system error has been detected in the I/O expansion adapter in PCIe adapter slot 3 in the PCI expansion unit.

May also be shown as 806f05133103ffff or 0x806f05133103ffff

Severity: Error

Alert Category: Critical - Other

Serviceable: Yes

CIM Information: **Prefix:** PLAT and **ID:** 0234

SNMP Trap ID: 50

Automatically notify Support: No

User response: This is a UEFI detected event. To find the UEFI diagnostic code for this event, in the information center, follow the instructions in "Finding the UEFI diagnostic code" under "UEFI diagnostic codes." Then, in the information center, open the topic for the UEFI diagnostic code and follow the instructions under "User response."

Related Links:

- “Finding the UEFI diagnostic code” on page 521

806f0513-3104ffff A PCI SERR has occurred on system [ComputerSystemElementName].

Explanation: A PCI system error has been detected in the I/O expansion adapter in PCIe adapter slot 4 in the PCI expansion unit.

May also be shown as 806f05133104ffff or 0x806f05133104ffff

Severity: Error

Alert Category: Critical - Other

Serviceable: Yes

CIM Information: **Prefix:** PLAT and **ID:** 0234

SNMP Trap ID: 50

Automatically notify Support: No

User response: This is a UEFI detected event. To find the UEFI diagnostic code for this event, in the information center, follow the instructions in "Finding the UEFI diagnostic code" under "UEFI diagnostic codes." Then, in the information center, open the topic for the UEFI diagnostic code and follow the instructions under "User response."

Related Links:

- “Finding the UEFI diagnostic code” on page 521

806f052b-2101ffff Invalid or Unsupported firmware or software was detected on system [ComputerSystemElementName].

Explanation: The IMM primary firmware image has been corrupted. The IMM is running on the backup image.

May also be shown as 806f052b2101ffff or 0x806f052b2101ffff

Severity: Error

Alert Category: Critical - Other

Serviceable: Yes

CIM Information: Prefix: PLAT and **ID:** 0446

SNMP Trap ID: 50

Automatically notify Support: No

User response: Update the IMM firmware.

Related Links:

- "Updating firmware and device drivers" on page 21
- IBM Flex System and IBM PureFlex Firmware Updates Best Practices

806f0607-0301ffff An SM BIOS Uncorrectable CPU complex error for CPU 1 has asserted.

Explanation: This message is for the use case when an SM BIOS Uncorrectable CPU complex error has asserted.

May also be shown as 806f06070301ffff or 0x806f06070301ffff

Severity: Error

Alert Category: Critical - CPU

Serviceable: Yes

CIM Information: Prefix: PLAT and **ID:** 0816

SNMP Trap ID: 40

Automatically notify Support: No

User response: This is a UEFI detected event. To find the UEFI diagnostic code for this event, in the information center, follow the instructions in "Finding the UEFI diagnostic code" under "UEFI diagnostic codes." Then, in the information center, open the topic for the UEFI diagnostic code and follow the instructions under "User response."

Related Links:

- "Finding the UEFI diagnostic code" on page 521

806f0607-0302ffff An SM BIOS Uncorrectable CPU complex error for CPU 2 has asserted.

Explanation: This message is for the use case when an SM BIOS Uncorrectable CPU complex error has asserted.

May also be shown as 806f06070302ffff or 0x806f06070302ffff

Severity: Error

Alert Category: Critical - CPU

Serviceable: Yes

CIM Information: Prefix: PLAT and **ID:** 0816

SNMP Trap ID: 40

Automatically notify Support: No

User response: This is a UEFI detected event. To find the UEFI diagnostic code for this event, in the information center, follow the instructions in "Finding the UEFI diagnostic code" under "UEFI diagnostic codes." Then, in the information center, open the topic for the UEFI diagnostic code and follow the instructions under "User response."

Related Links:

- “Finding the UEFI diagnostic code” on page 521

806f0607-2584ffff An SM BIOS Uncorrectable CPU complex error for [ProcessorElementName] has asserted.

Explanation: This message is for the use case when an SM BIOS Uncorrectable CPU complex error has asserted. (It might be All CPUs or One of CPUs as well)

May also be shown as 806f06072584ffff or 0x806f06072584ffff

Severity: Error

Alert Category: Critical - CPU

Serviceable: Yes

CIM Information: Prefix: PLAT and **ID:** 0816

SNMP Trap ID: 40

Automatically notify Support: No

User response: This is a UEFI detected event. To find the UEFI diagnostic code for this event, in the information center, follow the instructions in "Finding the UEFI diagnostic code" under "UEFI diagnostic codes." Then, in the information center, open the topic for the UEFI diagnostic code and follow the instructions under "User response."

Related Links:

- “Finding the UEFI diagnostic code” on page 521

806f060d-0400ffff Array [ComputerSystemElementName] has failed.

Explanation: The RAID array has failed.

May also be shown as 806f060d0400ffff or 0x806f060d0400ffff

Severity: Error

Alert Category: Critical - Hard Disk drive

Serviceable: Yes

CIM Information: Prefix: PLAT and **ID:** 0176

SNMP Trap ID: 5

Automatically notify Support: Yes

User response: Complete the following steps:

- Replace any hard disk drive that is indicated by a lit status LED.
- Re-create the array.
- Restore the data from a backup.

806f060d-0401ffff Array [ComputerSystemElementName] has failed.

Explanation: The RAID array has failed.

May also be shown as 806f060d0401ffff or 0x806f060d0401ffff

Severity: Error

Alert Category: Critical - Hard Disk drive

Serviceable: Yes

CIM Information: Prefix: PLAT and **ID:** 0176

SNMP Trap ID: 5

Automatically notify Support: Yes

User response: Complete the following steps:

- Replace any hard disk drive that is indicated by a lit status LED.
- Re-create the array.
- Restore the data from a backup.

806f060d-0402ffff Array [ComputerSystemElementName] has failed.

Explanation: The RAID array has failed.

May also be shown as 806f060d0402ffff or 0x806f060d0402ffff

Severity: Error

Alert Category: Critical - Hard Disk drive

Serviceable: Yes

CIM Information: Prefix: PLAT and **ID:** 0176

SNMP Trap ID: 5

Automatically notify Support: Yes

User response: Complete the following steps:
- Replace any hard disk drive that is indicated by a lit status LED.
- Re-create the array.
- Restore the data from a backup.

806f060d-0403ffff Array [ComputerSystemElementName] has failed.

Explanation: The RAID array has failed.

May also be shown as 806f060d0403ffff or 0x806f060d0403ffff

Severity: Error

Alert Category: Critical - Hard Disk drive

Serviceable: Yes

CIM Information: Prefix: PLAT and **ID:** 0176

SNMP Trap ID: 5

Automatically notify Support: Yes

User response: Complete the following steps:
- Replace any hard disk drive that is indicated by a lit status LED.
- Re-create the array.
- Restore the data from a backup.

806f060d-0404ffff Array [ComputerSystemElementName] has failed.

Explanation: The RAID array has failed.

May also be shown as 806f060d0404ffff or 0x806f060d0404ffff

Severity: Error

Alert Category: Critical - Hard Disk drive

Serviceable: Yes

CIM Information: Prefix: PLAT and **ID:** 0176

SNMP Trap ID: 5

Automatically notify Support: Yes

User response: Complete the following steps:

- Replace any hard disk drive that is indicated by a lit status LED.
- Re-create the array.
- Restore the data from a backup.

806f060d-0405ffff Array [ComputerSystemElementName] has failed.

Explanation: The RAID array has failed.

May also be shown as 806f060d0405ffff or 0x806f060d0405ffff

Severity: Error

Alert Category: Critical - Hard Disk drive

Serviceable: Yes

CIM Information: Prefix: PLAT and **ID:** 0176

SNMP Trap ID: 5

Automatically notify Support: Yes

User response: Complete the following steps:
- Replace any hard disk drive that is indicated by a lit status LED.
- Re-create the array.
- Restore the data from a backup.

806f060d-0406ffff Array [ComputerSystemElementName] has failed.

Explanation: The RAID array has failed.

May also be shown as 806f060d0406ffff or 0x806f060d0406ffff

Severity: Error

Alert Category: Critical - Hard Disk drive

Serviceable: Yes

CIM Information: Prefix: PLAT and **ID:** 0176

SNMP Trap ID: 5

Automatically notify Support: Yes

User response: Complete the following steps:
- Replace any hard disk drive that is indicated by a lit status LED.
- Re-create the array.
- Restore the data from a backup.

806f060d-0407ffff Array [ComputerSystemElementName] has failed.

Explanation: The RAID array has failed.

May also be shown as 806f060d0407ffff or 0x806f060d0407ffff

Severity: Error

Alert Category: Critical - Hard Disk drive

Serviceable: Yes

CIM Information: Prefix: PLAT and **ID:** 0176

SNMP Trap ID: 5

Automatically notify Support: Yes

User response: Complete the following steps:

- Replace any hard disk drive that is indicated by a lit status LED.
- Re-create the array.
- Restore the data from a backup.

806f070c-2001ffff Configuration Error for DIMM 1 on Subsystem [MemoryElementName].

Explanation: A Memory DIMM configuration error has been detected.

May also be shown as 806f070c2001ffff or 0x806f070c2001ffff

Severity: Error

Alert Category: Critical - Memory

Serviceable: Yes

CIM Information: Prefix: PLAT and **ID:** 0126

SNMP Trap ID: 41

Automatically notify Support: No

User response: This is a UEFI detected event. To find the UEFI diagnostic code for this event, in the information center, follow the instructions in "Finding the UEFI diagnostic code" under "UEFI diagnostic codes." Then, in the information center, open the topic for the UEFI diagnostic code and follow the instructions under "User response."

Related Links:

- “Finding the UEFI diagnostic code” on page 521

806f070c-2002ffff Configuration Error for DIMM 2 on Subsystem [MemoryElementName].

Explanation: A Memory DIMM configuration error has been detected.

May also be shown as 806f070c2002ffff or 0x806f070c2002ffff

Severity: Error

Alert Category: Critical - Memory

Serviceable: Yes

CIM Information: Prefix: PLAT and **ID:** 0126

SNMP Trap ID: 41

Automatically notify Support: No

User response: This is a UEFI detected event. To find the UEFI diagnostic code for this event, in the information center, follow the instructions in "Finding the UEFI diagnostic code" under "UEFI diagnostic codes." Then, in the information center, open the topic for the UEFI diagnostic code and follow the instructions under "User response."

Related Links:

- “Finding the UEFI diagnostic code” on page 521

806f070c-2003ffff A Memory DIMM configuration error has been detected.

Explanation: A Memory DIMM configuration error has been detected.

May also be shown as 806f070c2003ffff or 0x806f070c2003ffff

Severity: Error

Alert Category: Critical - Memory

Serviceable: Yes

CIM Information: Prefix: PLAT and **ID:** 0126

SNMP Trap ID: 41

Automatically notify Support: No

User response: This is a UEFI detected event. To find the UEFI diagnostic code for this event, in the information center, follow the instructions in "Finding the UEFI diagnostic code" under "UEFI diagnostic codes." Then, in the information center, open the topic for the UEFI diagnostic code and follow the instructions under "User response."

Related Links:

- "Finding the UEFI diagnostic code" on page 521

806f070c-2004ffff Configuration Error for DIMM 4 on Subsystem [MemoryElementName].

Explanation: A Memory DIMM configuration error has been detected.

May also be shown as 806f070c2004ffff or 0x806f070c2004ffff

Severity: Error

Alert Category: Critical - Memory

Serviceable: Yes

CIM Information: Prefix: PLAT and **ID:** 0126

SNMP Trap ID: 41

Automatically notify Support: No

User response: This is a UEFI detected event. To find the UEFI diagnostic code for this event, in the information center, follow the instructions in "Finding the UEFI diagnostic code" under "UEFI diagnostic codes." Then, in the information center, open the topic for the UEFI diagnostic code and follow the instructions under "User response."

Related Links:

- "Finding the UEFI diagnostic code" on page 521

806f070c-2005ffff Configuration Error for DIMM 5 on Subsystem [MemoryElementName].

Explanation: A Memory DIMM configuration error has been detected.

May also be shown as 806f070c2005ffff or 0x806f070c2005ffff

Severity: Error

Alert Category: Critical - Memory

Serviceable: Yes

CIM Information: Prefix: PLAT and **ID:** 0126

SNMP Trap ID: 41

Automatically notify Support: No

User response: This is a UEFI detected event. To find the UEFI diagnostic code for this event, in the information center, follow the instructions in "Finding the UEFI diagnostic code" under "UEFI diagnostic codes." Then, in the information center, open the topic for the UEFI diagnostic code and follow the instructions under "User response."

Related Links:

- "Finding the UEFI diagnostic code" on page 521

806f070c-2006ffff Configuration Error for DIMM 6 on Subsystem [MemoryElementName].

Explanation: A Memory DIMM configuration error has been detected.

May also be shown as 806f070c2006ffff or 0x806f070c2006ffff

Severity: Error

Alert Category: Critical - Memory

Serviceable: Yes

CIM Information: Prefix: PLAT and **ID:** 0126

SNMP Trap ID: 41

Automatically notify Support: No

User response: This is a UEFI detected event. To find the UEFI diagnostic code for this event, in the information center, follow the instructions in "Finding the UEFI diagnostic code" under "UEFI diagnostic codes." Then, in the information center, open the topic for the UEFI diagnostic code and follow the instructions under "User response."

Related Links:

- “Finding the UEFI diagnostic code” on page 521

806f070c-2007ffff Configuration Error for DIMM 7 on Subsystem [MemoryElementName].

Explanation: A Memory DIMM configuration error has been detected.

May also be shown as 806f070c2007ffff or 0x806f070c2007ffff

Severity: Error

Alert Category: Critical - Memory

Serviceable: Yes

CIM Information: Prefix: PLAT and **ID:** 0126

SNMP Trap ID: 41

Automatically notify Support: No

User response: This is a UEFI detected event. To find the UEFI diagnostic code for this event, in the information center, follow the instructions in "Finding the UEFI diagnostic code" under "UEFI diagnostic codes." Then, in the information center, open the topic for the UEFI diagnostic code and follow the instructions under "User response."

Related Links:

- “Finding the UEFI diagnostic code” on page 521

806f070c-2008ffff Configuration Error for DIMM 8 on Subsystem [MemoryElementName].

Explanation: A Memory DIMM configuration error has been detected.

May also be shown as 806f070c2008ffff or 0x806f070c2008ffff

Severity: Error

Alert Category: Critical - Memory

Serviceable: Yes

CIM Information: Prefix: PLAT and **ID:** 0126

SNMP Trap ID: 41

Automatically notify Support: No

User response: This is a UEFI detected event. To find the UEFI diagnostic code for this event, in the information center, follow the instructions in "Finding the UEFI diagnostic code" under "UEFI diagnostic codes." Then, in the information center, open the topic for the UEFI diagnostic code and follow the instructions under "User response."

Related Links:

- “Finding the UEFI diagnostic code” on page 521

806f070c-2009ffff Configuration Error for DIMM 9 on Subsystem [MemoryElementName].

Explanation: A Memory DIMM configuration error has been detected.

May also be shown as 806f070c2009ffff or 0x806f070c2009ffff

Severity: Error

Alert Category: Critical - Memory

Serviceable: Yes

CIM Information: Prefix: PLAT and **ID:** 0126

SNMP Trap ID: 41

Automatically notify Support: No

User response: This is a UEFI detected event. To find the UEFI diagnostic code for this event, in the information center, follow the instructions in "Finding the UEFI diagnostic code" under "UEFI diagnostic codes." Then, in the information center, open the topic for the UEFI diagnostic code and follow the instructions under "User response."

Related Links:

- “Finding the UEFI diagnostic code” on page 521

806f070c-200affff Configuration Error for DIMM 10 on Subsystem [MemoryElementName].

Explanation: A Memory DIMM configuration error has been detected.

May also be shown as 806f070c200affff or 0x806f070c200affff

Severity: Error

Alert Category: Critical - Memory

Serviceable: Yes

CIM Information: Prefix: PLAT and **ID:** 0126

SNMP Trap ID: 41

Automatically notify Support: No

User response: This is a UEFI detected event. To find the UEFI diagnostic code for this event, in the information center, follow the instructions in "Finding the UEFI diagnostic code" under "UEFI diagnostic codes." Then, in the information center, open the topic for the UEFI diagnostic code and follow the instructions under "User response."

Related Links:

- “Finding the UEFI diagnostic code” on page 521

806f070c-200bffff Configuration Error for DIMM 11 on Subsystem [MemoryElementName].

Explanation: A Memory DIMM configuration error has been detected.

May also be shown as 806f070c200bffff or 0x806f070c200bffff

Severity: Error

Alert Category: Critical - Memory

Serviceable: Yes

CIM Information: Prefix: PLAT and **ID:** 0126

SNMP Trap ID: 41

Automatically notify Support: No

User response: This is a UEFI detected event. To find the UEFI diagnostic code for this event, in the information center, follow the instructions in "Finding the UEFI diagnostic code" under "UEFI diagnostic codes." Then, in the information center, open the topic for the UEFI diagnostic code and follow the instructions under "User response."

Related Links:

- “Finding the UEFI diagnostic code” on page 521

806f070c-200cffff Configuration Error for DIMM 12 on Subsystem [MemoryElementName].

Explanation: A Memory DIMM configuration error has been detected.

May also be shown as 806f070c200cffff or 0x806f070c200cffff

Severity: Error

Alert Category: Critical - Memory

Serviceable: Yes

CIM Information: Prefix: PLAT and **ID:** 0126

SNMP Trap ID: 41

Automatically notify Support: No

User response: This is a UEFI detected event. To find the UEFI diagnostic code for this event, in the information center, follow the instructions in "Finding the UEFI diagnostic code" under "UEFI diagnostic codes." Then, in the information center, open the topic for the UEFI diagnostic code and follow the instructions under "User response."

Related Links:

- “Finding the UEFI diagnostic code” on page 521

806f070c-200dffff Configuration Error for DIMM 13 on Subsystem [MemoryElementName].

Explanation: A Memory DIMM configuration error has been detected.

May also be shown as 806f070c200dffff or 0x806f070c200dffff

Severity: Error

Alert Category: Critical - Memory

Serviceable: Yes

CIM Information: Prefix: PLAT and **ID:** 0126

SNMP Trap ID: 41

Automatically notify Support: No

User response: This is a UEFI detected event. To find the UEFI diagnostic code for this event, in the information center, follow the instructions in "Finding the UEFI diagnostic code" under "UEFI diagnostic codes." Then, in the information center, open the topic for the UEFI diagnostic code and follow the instructions under "User response."

Related Links:

- “Finding the UEFI diagnostic code” on page 521

806f070c-200effff Configuration Error for DIMM 14 on Subsystem [MemoryElementName].

Explanation: A Memory DIMM configuration error has been detected.

May also be shown as 806f070c200effff or 0x806f070c200effff

Severity: Error

Alert Category: Critical - Memory

Serviceable: Yes

CIM Information: Prefix: PLAT and **ID:** 0126

SNMP Trap ID: 41

Automatically notify Support: No

User response: This is a UEFI detected event. To find the UEFI diagnostic code for this event, in the information center, follow the instructions in "Finding the UEFI diagnostic code" under "UEFI diagnostic codes." Then, in the information center, open the topic for the UEFI diagnostic code and follow the instructions under "User response."

Related Links:

- “Finding the UEFI diagnostic code” on page 521

806f070c-200fffff Configuration Error for DIMM 15 on Subsystem [MemoryElementName].

Explanation: A Memory DIMM configuration error has been detected.

May also be shown as 806f070c200fffff or 0x806f070c200fffff

Severity: Error

Alert Category: Critical - Memory

Serviceable: Yes

CIM Information: Prefix: PLAT and **ID:** 0126

SNMP Trap ID: 41

Automatically notify Support: No

User response: This is a UEFI detected event. To find the UEFI diagnostic code for this event, in the information center, follow the instructions in "Finding the UEFI diagnostic code" under "UEFI diagnostic codes." Then, in the information center, open the topic for the UEFI diagnostic code and follow the instructions under "User response."

Related Links:

- “Finding the UEFI diagnostic code” on page 521

806f070c-2010ffff Configuration Error for DIMM 16 on Subsystem [MemoryElementName].

Explanation: A Memory DIMM configuration error has been detected.

May also be shown as 806f070c2010ffff or 0x806f070c2010ffff

Severity: Error

Alert Category: Critical - Memory

Serviceable: Yes

CIM Information: Prefix: PLAT and **ID:** 0126

SNMP Trap ID: 41

Automatically notify Support: No

User response: This is a UEFI detected event. To find the UEFI diagnostic code for this event, in the information center, follow the instructions in "Finding the UEFI diagnostic code" under "UEFI diagnostic codes." Then, in the information center, open the topic for the UEFI diagnostic code and follow the instructions under "User response."

Related Links:

- “Finding the UEFI diagnostic code” on page 521

806f070c-2011ffff Configuration Error for DIMM 17 on Subsystem [MemoryElementName].

Explanation: A Memory DIMM configuration error has been detected.

May also be shown as 806f070c2011ffff or 0x806f070c2011ffff

Severity: Error

Alert Category: Critical - Memory

Serviceable: Yes

CIM Information: Prefix: PLAT and **ID:** 0126

SNMP Trap ID: 41

Automatically notify Support: No

User response: This is a UEFI detected event. To find the UEFI diagnostic code for this event, in the information center, follow the instructions in "Finding the UEFI diagnostic code" under "UEFI diagnostic codes." Then, in the information center, open the topic for the UEFI diagnostic code and follow the instructions under "User response."

Related Links:

- “Finding the UEFI diagnostic code” on page 521

806f070c-2012ffff Configuration Error for DIMM 18 on Subsystem [MemoryElementName].

Explanation: A Memory DIMM configuration error has been detected.

May also be shown as 806f070c2012ffff or 0x806f070c2012ffff

Severity: Error

Alert Category: Critical - Memory

Serviceable: Yes

CIM Information: Prefix: PLAT and **ID:** 0126

SNMP Trap ID: 41

Automatically notify Support: No

User response: This is a UEFI detected event. To find the UEFI diagnostic code for this event, in the information center, follow the instructions in "Finding the UEFI diagnostic code" under "UEFI diagnostic codes." Then, in the information center, open the topic for the UEFI diagnostic code and follow the instructions under "User response."

Related Links:

- “Finding the UEFI diagnostic code” on page 521

806f070c-2013ffff Configuration Error for DIMM 19 on Subsystem [MemoryElementName].

Explanation: A Memory DIMM configuration error has been detected.

May also be shown as 806f070c2013ffff or 0x806f070c2013ffff

Severity: Error

Alert Category: Critical - Memory

Serviceable: Yes

CIM Information: Prefix: PLAT and **ID:** 0126

SNMP Trap ID: 41

Automatically notify Support: No

User response: This is a UEFI detected event. To find the UEFI diagnostic code for this event, in the information center, follow the instructions in "Finding the UEFI diagnostic code" under "UEFI diagnostic codes." Then, in the information center, open the topic for the UEFI diagnostic code and follow the instructions under "User response."

Related Links:

- “Finding the UEFI diagnostic code” on page 521

806f070c-2014ffff Configuration Error for DIMM 20 on Subsystem [MemoryElementName].

Explanation: A Memory DIMM configuration error has been detected.

May also be shown as 806f070c2014ffff or 0x806f070c2014ffff

Severity: Error

Alert Category: Critical - Memory

Serviceable: Yes

CIM Information: Prefix: PLAT and **ID:** 0126

SNMP Trap ID: 41

Automatically notify Support: No

User response: This is a UEFI detected event. To find the UEFI diagnostic code for this event, in the information center, follow the instructions in "Finding the UEFI diagnostic code" under "UEFI diagnostic codes." Then, in the

information center, open the topic for the UEFI diagnostic code and follow the instructions under "User response."

Related Links:

- “Finding the UEFI diagnostic code” on page 521

806f070c-2015ffff Configuration Error for DIMM 21 on Subsystem [MemoryElementName].

Explanation: A Memory DIMM configuration error has been detected.

May also be shown as 806f070c2015ffff or 0x806f070c2015ffff

Severity: Error

Alert Category: Critical - Memory

Serviceable: Yes

CIM Information: Prefix: PLAT and **ID:** 0126

SNMP Trap ID: 41

Automatically notify Support: No

User response: This is a UEFI detected event. To find the UEFI diagnostic code for this event, in the information center, follow the instructions in "Finding the UEFI diagnostic code" under "UEFI diagnostic codes." Then, in the information center, open the topic for the UEFI diagnostic code and follow the instructions under "User response."

Related Links:

- “Finding the UEFI diagnostic code” on page 521

806f070c-2016ffff Configuration Error for DIMM 22 on Subsystem [MemoryElementName].

Explanation: A Memory DIMM configuration error has been detected.

May also be shown as 806f070c2016ffff or 0x806f070c2016ffff

Severity: Error

Alert Category: Critical - Memory

Serviceable: Yes

CIM Information: Prefix: PLAT and **ID:** 0126

SNMP Trap ID: 41

Automatically notify Support: No

User response: This is a UEFI detected event. To find the UEFI diagnostic code for this event, in the information center, follow the instructions in "Finding the UEFI diagnostic code" under "UEFI diagnostic codes." Then, in the information center, open the topic for the UEFI diagnostic code and follow the instructions under "User response."

Related Links:

- “Finding the UEFI diagnostic code” on page 521

806f070c-2017ffff Configuration Error for DIMM 23 on Subsystem [MemoryElementName].

Explanation: A Memory DIMM configuration error has been detected.

May also be shown as 806f070c2017ffff or 0x806f070c2017ffff

Severity: Error

Alert Category: Critical - Memory

Serviceable: Yes

CIM Information: Prefix: PLAT and **ID:** 0126

SNMP Trap ID: 41

Automatically notify Support: No

User response: This is a UEFI detected event. To find the UEFI diagnostic code for this event, in the information center, follow the instructions in "Finding the UEFI diagnostic code" under "UEFI diagnostic codes." Then, in the information center, open the topic for the UEFI diagnostic code and follow the instructions under "User response."

Related Links:

- "Finding the UEFI diagnostic code" on page 521

806f070c-2018ffff Configuration Error for DIMM 24 on Subsystem [MemoryElementName].

Explanation: A Memory DIMM configuration error has been detected.

May also be shown as 806f070c2018ffff or 0x806f070c2018ffff

Severity: Error

Alert Category: Critical - Memory

Serviceable: Yes

CIM Information: Prefix: PLAT and **ID:** 0126

SNMP Trap ID: 41

Automatically notify Support: No

User response: This is a UEFI detected event. To find the UEFI diagnostic code for this event, in the information center, follow the instructions in "Finding the UEFI diagnostic code" under "UEFI diagnostic codes." Then, in the information center, open the topic for the UEFI diagnostic code and follow the instructions under "User response."

Related Links:

- "Finding the UEFI diagnostic code" on page 521

806f070c-2581ffff Configuration Error for [PhysicalMemoryElementName] on Subsystem [MemoryElementName].

Explanation: A Memory DIMM configuration error has been detected.

May also be shown as 806f070c2581ffff or 0x806f070c2581ffff

Severity: Error

Alert Category: Critical - Memory

Serviceable: Yes

CIM Information: Prefix: PLAT and **ID:** 0126

SNMP Trap ID: 41

Automatically notify Support: No

User response: This is a UEFI detected event. To find the UEFI diagnostic code for this event, in the information center, follow the instructions in "Finding the UEFI diagnostic code" under "UEFI diagnostic codes." Then, in the information center, open the topic for the UEFI diagnostic code and follow the instructions under "User response."

Related Links:

- "Finding the UEFI diagnostic code" on page 521

806f070d-0400ffff Rebuild in progress for Array in system [ComputerSystemElementName].

Explanation: The RAID array in the specified system is being rebuilt.

May also be shown as 806f070d0400ffff or 0x806f070d0400ffff

Severity: Info

Alert Category: System - Other

Serviceable: No

CIM Information: Prefix: PLAT and **ID:** 0178

SNMP Trap ID:

Automatically notify Support: No

User response: Information only; no action is required.

806f070d-0401ffff Rebuild in progress for Array in system [ComputerSystemElementName].

Explanation: The RAID array in the specified system is being rebuilt.

May also be shown as 806f070d0401ffff or 0x806f070d0401ffff

Severity: Info

Alert Category: System - Other

Serviceable: No

CIM Information: Prefix: PLAT and **ID:** 0178

SNMP Trap ID:

Automatically notify Support: No

User response: Information only; no action is required.

806f070d-0402ffff Rebuild in progress for Array in system [ComputerSystemElementName].

Explanation: The RAID array in the specified system is being rebuilt.

May also be shown as 806f070d0402ffff or 0x806f070d0402ffff

Severity: Info

Alert Category: System - Other

Serviceable: No

CIM Information: Prefix: PLAT and **ID:** 0178

SNMP Trap ID:

Automatically notify Support: No

User response: Information only; no action is required.

806f070d-0403ffff Rebuild in progress for Array in system [ComputerSystemElementName].

Explanation: The RAID array in the specified system is being rebuilt.

May also be shown as 806f070d0403ffff or 0x806f070d0403ffff

Severity: Info

Alert Category: System - Other

Serviceable: No

CIM Information: Prefix: PLAT and **ID:** 0178

SNMP Trap ID:

Automatically notify Support: No

User response: Information only; no action is required.

806f070d-0404ffff Rebuild in progress for Array in system [ComputerSystemElementName].

Explanation: The RAID array in the specified system is being rebuilt.

May also be shown as 806f070d0404ffff or 0x806f070d0404ffff

Severity: Info

Alert Category: System - Other

Serviceable: No

CIM Information: **Prefix:** PLAT and **ID:** 0178

SNMP Trap ID:

Automatically notify Support: No

User response: Information only; no action is required.

806f070d-0405ffff Rebuild in progress for Array in system [ComputerSystemElementName].

Explanation: The RAID array in the specified system is being rebuilt.

May also be shown as 806f070d0405ffff or 0x806f070d0405ffff

Severity: Info

Alert Category: System - Other

Serviceable: No

CIM Information: **Prefix:** PLAT and **ID:** 0178

SNMP Trap ID:

Automatically notify Support: No

User response: Information only; no action is required.

806f070d-0406ffff Rebuild in progress for Array in system [ComputerSystemElementName].

Explanation: The RAID array in the specified system is being rebuilt.

May also be shown as 806f070d0406ffff or 0x806f070d0406ffff

Severity: Info

Alert Category: System - Other

Serviceable: No

CIM Information: **Prefix:** PLAT and **ID:** 0178

SNMP Trap ID:

Automatically notify Support: No

User response: Information only; no action is required.

806f070d-0407ffff Rebuild in progress for Array in system [ComputerSystemElementName].

Explanation: The RAID array in the specified system is being rebuilt.

May also be shown as 806f070d0407ffff or 0x806f070d0407ffff

Severity: Info

Alert Category: System - Other

Serviceable: No

CIM Information: **Prefix:** PLAT and **ID:** 0178

SNMP Trap ID:

Automatically notify Support: No

User response: Information only; no action is required.

806f0807-0301ffff CPU 1 has been Disabled.

Explanation: This message is for the use case when an implementation has detected a Processor has been Disabled.

May also be shown as 806f08070301ffff or 0x806f08070301ffff

Severity: Info

Alert Category: System - Other

Serviceable: No

CIM Information: Prefix: PLAT and **ID:** 0061

SNMP Trap ID:

Automatically notify Support: No

User response: This is a UEFI detected event. To find the UEFI diagnostic code for this event, in the information center, follow the instructions in "Finding the UEFI diagnostic code" under "UEFI diagnostic codes." Then, in the information center, open the topic for the UEFI diagnostic code and follow the instructions under "User response."

Related Links:

- “Finding the UEFI diagnostic code” on page 521

806f0807-0302ffff CPU 2 has been Disabled.

Explanation: This message is for the use case when an implementation has detected a Processor has been Disabled.

May also be shown as 806f08070302ffff or 0x806f08070302ffff

Severity: Info

Alert Category: System - Other

Serviceable: No

CIM Information: Prefix: PLAT and **ID:** 0061

SNMP Trap ID:

Automatically notify Support: No

User response: This is a UEFI detected event. To find the UEFI diagnostic code for this event, in the information center, follow the instructions in "Finding the UEFI diagnostic code" under "UEFI diagnostic codes." Then, in the information center, open the topic for the UEFI diagnostic code and follow the instructions under "User response."

Related Links:

- “Finding the UEFI diagnostic code” on page 521

806f0807-2584ffff [ProcessorElementName] has been Disabled.

Explanation: This message is for the use case when an implementation has detected a Processor has been Disabled. (It might be All CPUs or One of CPUs as well)

May also be shown as 806f08072584ffff or 0x806f08072584ffff

Severity: Info

Alert Category: System - Other

Serviceable: No

CIM Information: Prefix: PLAT and **ID:** 0061

SNMP Trap ID:

Automatically notify Support: No

User response: This is a UEFI detected event. To find the UEFI diagnostic code for this event, in the information center, follow the instructions in "Finding the UEFI diagnostic code" under "UEFI diagnostic codes." Then, in the information center, open the topic for the UEFI diagnostic code and follow the instructions under "User response."

Related Links:

- "Finding the UEFI diagnostic code" on page 521

806f0813-2581ffff A Uncorrectable Bus Error has occurred on system [ComputerSystemElementName].

Explanation: A catastrophic system error has occurred. The system firmware will attempt to analyze the failure to determine whether the failure was due to a hardware component or a software component.

May also be shown as 806f08132581ffff or 0x806f08132581ffff

Severity: Error

Alert Category: Critical - Other

Serviceable: Yes

CIM Information: Prefix: PLAT and **ID:** 0240

SNMP Trap ID: 50

Automatically notify Support: Yes

User response:

1. Check the Support Portal for service bulletins and RETAIN tips or firmware updates that might correct the error.
2. Make sure that all I/O expansion adapters have correct and matching levels of device drivers and firmware.
3. Check the system-event log for additional information about failing components.
4. If there are no entries related to the error in the system-event log, contact IBM Support and send DSA data to IBM.

806f0813-2584ffff A Uncorrectable Bus Error has occurred on system [ComputerSystemElementName].

Explanation: A catastrophic system error has occurred. The system firmware will attempt to analyze the failure to determine whether the failure was due to a hardware component or a software component.

May also be shown as 806f08132584ffff or 0x806f08132584ffff

Severity: Error

Alert Category: Critical - Other

Serviceable: Yes

CIM Information: Prefix: PLAT and **ID:** 0240

SNMP Trap ID: 50

Automatically notify Support: Yes

User response:

1. Check the Support Portal for service bulletins and RETAIN tips or firmware updates that might correct the error.
2. Make sure that all I/O expansion adapters have correct and matching levels of device drivers and firmware.
3. Check the system-event log for additional information about failing components.
4. If there are no entries related to the error in the system-event log, contact IBM Support and send DSA data to IBM.

806f0823-2101ffff Watchdog Timer interrupt occurred for [WatchdogElementName].

Explanation: The IPMI watchdog timer has expired. A watchdog interrupt has occurred.

May also be shown as 806f08232101ffff or 0x806f08232101ffff

Severity: Info

Alert Category: System - Other

Serviceable: No

CIM Information: Prefix: PLAT and **ID:** 0376

SNMP Trap ID:

Automatically notify Support: No

User response: Information only; no action is required.

806f090c-20010101 memory device 1 in Group 1 on Subsystem System Memory Throttled

Explanation: Memory DIMM has been throttled due to high temperature detected by the DIMM sensor.

May also be shown as 806f090c20010101 or 0x806f090c20010101

Severity: Info

Alert Category: System - Other

Serviceable: Yes

CIM Information: Prefix: PLAT and **ID:** 0142

SNMP Trap ID:

Automatically notify Support: No

User response: Complete the following steps:

1. Check the CMM or FSM event log for any fan or cooling related issues.
2. Make sure that the airflow at the front and rear of the chassis is not obstructed and that fillers are in place and correctly installed.
3. Make sure that the room temperature is within operating specifications.
4. Make sure that the DIMM baffles are in place.
5. If the problem persists and there are no other DIMMs with the same indication, replace the DIMM.

Related Links:

- "Removing a DIMM" on page 589
- "Installing a DIMM" on page 591

806f090c-2001ffff memory device 1 in Group 1 on Subsystem System Memory Throttled

Explanation: Memory DIMM has been throttled due to high temperature detected by the DIMM sensor.

May also be shown as 806f090c2001ffff or 0x806f090c2001ffff

Severity: Info

Alert Category: System - Other

Serviceable: Yes

CIM Information: Prefix: PLAT and **ID:** 0142

SNMP Trap ID:

Automatically notify Support: No

User response: Complete the following steps:

1. Check the CMM or FSM event log for any fan or cooling related issues.
2. Make sure that the airflow at the front and rear of the chassis is not obstructed and that fillers are in place and correctly installed.
3. Make sure that the room temperature is within operating specifications.
4. Make sure that the DIMM baffles are in place.
5. If the problem persists and there are no other DIMMs with the same indication, replace the DIMM.

Related Links:

- "Removing a DIMM" on page 589
- "Installing a DIMM" on page 591

806f090c-20020102 memory device 2 in Group 1 on Subsystem System Memory Throttled

Explanation: This message is for the use case when an implementation has detected Memory has been Throttled.

May also be shown as 806f090c20020102 or 0x806f090c20020102

Severity: Info

Alert Category: System - Other

Serviceable: No

CIM Information: Prefix: PLAT and **ID:** 0142

SNMP Trap ID:

Automatically notify Support: No

User response: Complete the following steps:

1. Check the CMM or FSM event log for any fan or cooling related issues.
2. Make sure that the airflow at the front and rear of the chassis is not obstructed and that fillers are in place and correctly installed.
3. Make sure that the room temperature is within operating specifications.
4. Make sure that the DIMM baffles are in place.
5. If the problem persists and there are no other DIMMs with the same indication, replace the DIMM.

Related Links:

- "Removing a DIMM" on page 589
- "Installing a DIMM" on page 591

806f090c-2002ffff memory device 2 in Group 1 on Subsystem System Memory Throttled

Explanation: This message is for the use case when an implementation has detected Memory has been Throttled.

May also be shown as 806f090c2002ffff or 0x806f090c2002ffff

Severity: Info

Alert Category: System - Other

Serviceable: No

CIM Information: Prefix: PLAT and **ID:** 0142

SNMP Trap ID:

Automatically notify Support: No

User response: Complete the following steps:

1. Check the CMM or FSM event log for any fan or cooling related issues.
2. Make sure that the airflow at the front and rear of the chassis is not obstructed and that fillers are in place and correctly installed.
3. Make sure that the room temperature is within operating specifications.
4. Make sure that the DIMM baffles are in place.
5. If the problem persists and there are no other DIMMs with the same indication, replace the DIMM.

Related Links:

- "Removing a DIMM" on page 589
- "Installing a DIMM" on page 591

806f090c-20030103 memory device 3 in Group 1 on Subsystem System Memory Throttled

Explanation: This message is for the use case when an implementation has detected Memory has been Throttled.

May also be shown as 806f090c20030103 or 0x806f090c20030103

Severity: Info

Alert Category: System - Other

Serviceable: No

CIM Information: Prefix: PLAT and **ID:** 0142

SNMP Trap ID:

Automatically notify Support: No

User response: Complete the following steps:

1. Check the CMM or FSM event log for any fan or cooling related issues.
2. Make sure that the airflow at the front and rear of the chassis is not obstructed and that fillers are in place and correctly installed.
3. Make sure that the room temperature is within operating specifications.
4. Make sure that the DIMM baffles are in place.
5. If the problem persists and there are no other DIMMs with the same indication, replace the DIMM.

Related Links:

- "Removing a DIMM" on page 589
- "Installing a DIMM" on page 591

806f090c-2003ffff memory device 3 in Group 1 on Subsystem System Memory Throttled

Explanation: This message is for the use case when an implementation has detected Memory has been Throttled.

May also be shown as 806f090c2003ffff or 0x806f090c2003ffff

Severity: Info

Alert Category: System - Other

Serviceable: No

CIM Information: Prefix: PLAT and **ID:** 0142

SNMP Trap ID:

Automatically notify Support: No

User response: Complete the following steps:

1. Check the CMM or FSM event log for any fan or cooling related issues.
2. Make sure that the airflow at the front and rear of the chassis is not obstructed and that fillers are in place and correctly installed.
3. Make sure that the room temperature is within operating specifications.
4. Make sure that the DIMM baffles are in place.
5. If the problem persists and there are no other DIMMs with the same indication, replace the DIMM.

Related Links:

- "Removing a DIMM" on page 589
- "Installing a DIMM" on page 591

806f090c-20040104 memory device 4 in Group 1 on Subsystem System Memory Throttled

Explanation: This message is for the use case when an implementation has detected Memory has been Throttled.

May also be shown as 806f090c20040104 or 0x806f090c20040104

Severity: Info

Alert Category: System - Other

Serviceable: No

CIM Information: Prefix: PLAT and **ID:** 0142

SNMP Trap ID:

Automatically notify Support: No

User response: Complete the following steps:

1. Check the CMM or FSM event log for any fan or cooling related issues.
2. Make sure that the airflow at the front and rear of the chassis is not obstructed and that fillers are in place and correctly installed.
3. Make sure that the room temperature is within operating specifications.
4. Make sure that the DIMM baffles are in place.
5. If the problem persists and there are no other DIMMs with the same indication, replace the DIMM.

Related Links:

- "Removing a DIMM" on page 589
- "Installing a DIMM" on page 591

806f090c-2004ffff memory device 4 in Group 1 on Subsystem System Memory Throttled

Explanation: This message is for the use case when an implementation has detected Memory has been Throttled.

May also be shown as 806f090c2004ffff or 0x806f090c2004ffff

Severity: Info

Alert Category: System - Other

Serviceable: No

CIM Information: Prefix: PLAT and **ID:** 0142

SNMP Trap ID:

Automatically notify Support: No

User response: Complete the following steps:

1. Check the CMM or FSM event log for any fan or cooling related issues.
2. Make sure that the airflow at the front and rear of the chassis is not obstructed and that fillers are in place and correctly installed.
3. Make sure that the room temperature is within operating specifications.
4. Make sure that the DIMM baffles are in place.
5. If the problem persists and there are no other DIMMs with the same indication, replace the DIMM.

Related Links:

- "Removing a DIMM" on page 589
- "Installing a DIMM" on page 591

806f090c-20050105 memory device 5 in Group 1 on Subsystem System Memory Throttled

Explanation: This message is for the use case when an implementation has detected Memory has been Throttled.

May also be shown as 806f090c20050105 or 0x806f090c20050105

Severity: Info

Alert Category: System - Other

Serviceable: No

CIM Information: Prefix: PLAT and **ID:** 0142

SNMP Trap ID:

Automatically notify Support: No

User response: Complete the following steps:

1. Check the CMM or FSM event log for any fan or cooling related issues.
2. Make sure that the airflow at the front and rear of the chassis is not obstructed and that fillers are in place and correctly installed.
3. Make sure that the room temperature is within operating specifications.
4. Make sure that the DIMM baffles are in place.
5. If the problem persists and there are no other DIMMs with the same indication, replace the DIMM.

Related Links:

- "Removing a DIMM" on page 589
- "Installing a DIMM" on page 591

806f090c-2005ffff memory device 5 in Group 1 on Subsystem System Memory Throttled

Explanation: This message is for the use case when an implementation has detected Memory has been Throttled.

May also be shown as 806f090c2005ffff or 0x806f090c2005ffff

Severity: Info

Alert Category: System - Other

Serviceable: No

CIM Information: Prefix: PLAT and **ID:** 0142

SNMP Trap ID:

Automatically notify Support: No

User response: Complete the following steps:

1. Check the CMM or FSM event log for any fan or cooling related issues.
2. Make sure that the airflow at the front and rear of the chassis is not obstructed and that fillers are in place and correctly installed.
3. Make sure that the room temperature is within operating specifications.
4. Make sure that the DIMM baffles are in place.
5. If the problem persists and there are no other DIMMs with the same indication, replace the DIMM.

Related Links:

- "Removing a DIMM" on page 589
- "Installing a DIMM" on page 591

806f090c-20060106 memory device 6 in Group 1 on Subsystem System Memory Throttled

Explanation: This message is for the use case when an implementation has detected Memory has been Throttled.

May also be shown as 806f090c20060106 or 0x806f090c20060106

Severity: Info

Alert Category: System - Other

Serviceable: No

CIM Information: Prefix: PLAT and **ID:** 0142

SNMP Trap ID:

Automatically notify Support: No

User response: Complete the following steps:

1. Check the CMM or FSM event log for any fan or cooling related issues.
2. Make sure that the airflow at the front and rear of the chassis is not obstructed and that fillers are in place and correctly installed.
3. Make sure that the room temperature is within operating specifications.
4. Make sure that the DIMM baffles are in place.
5. If the problem persists and there are no other DIMMs with the same indication, replace the DIMM.

Related Links:

- "Removing a DIMM" on page 589
- "Installing a DIMM" on page 591

806f090c-2006ffff memory device 6 in Group 1 on Subsystem System Memory Throttled

Explanation: This message is for the use case when an implementation has detected Memory has been Throttled.

May also be shown as 806f090c2006ffff or 0x806f090c2006ffff

Severity: Info

Alert Category: System - Other

Serviceable: No

CIM Information: Prefix: PLAT and **ID:** 0142

SNMP Trap ID:

Automatically notify Support: No

User response: Complete the following steps:

1. Check the CMM or FSM event log for any fan or cooling related issues.
2. Make sure that the airflow at the front and rear of the chassis is not obstructed and that fillers are in place and correctly installed.
3. Make sure that the room temperature is within operating specifications.
4. Make sure that the DIMM baffles are in place.
5. If the problem persists and there are no other DIMMs with the same indication, replace the DIMM.

Related Links:

- "Removing a DIMM" on page 589
- "Installing a DIMM" on page 591

806f090c-20070107 memory device 7 in Group 1 on Subsystem System Memory Throttled

Explanation: This message is for the use case when an implementation has detected Memory has been Throttled.

May also be shown as 806f090c20070107 or 0x806f090c20070107

Severity: Info

Alert Category: System - Other

Serviceable: No

CIM Information: Prefix: PLAT and **ID:** 0142

SNMP Trap ID:

Automatically notify Support: No

User response: Complete the following steps:

1. Check the CMM or FSM event log for any fan or cooling related issues.
2. Make sure that the airflow at the front and rear of the chassis is not obstructed and that fillers are in place and correctly installed.
3. Make sure that the room temperature is within operating specifications.
4. Make sure that the DIMM baffles are in place.
5. If the problem persists and there are no other DIMMs with the same indication, replace the DIMM.

Related Links:

- "Removing a DIMM" on page 589
- "Installing a DIMM" on page 591

806f090c-2007ffff memory device 7 in Group 1 on Subsystem System Memory Throttled

Explanation: This message is for the use case when an implementation has detected Memory has been Throttled.

May also be shown as 806f090c2007ffff or 0x806f090c2007ffff

Severity: Info

Alert Category: System - Other

Serviceable: No

CIM Information: Prefix: PLAT and **ID:** 0142

SNMP Trap ID:

Automatically notify Support: No

User response: Complete the following steps:

1. Check the CMM or FSM event log for any fan or cooling related issues.
2. Make sure that the airflow at the front and rear of the chassis is not obstructed and that fillers are in place and correctly installed.
3. Make sure that the room temperature is within operating specifications.
4. Make sure that the DIMM baffles are in place.
5. If the problem persists and there are no other DIMMs with the same indication, replace the DIMM.

Related Links:

- "Removing a DIMM" on page 589
- "Installing a DIMM" on page 591

806f090c-20080108 memory device 8 in Group 1 on Subsystem System Memory Throttled

Explanation: This message is for the use case when an implementation has detected Memory has been Throttled.

May also be shown as 806f090c20080108 or 0x806f090c20080108

Severity: Info

Alert Category: System - Other

Serviceable: No

CIM Information: Prefix: PLAT and **ID:** 0142

SNMP Trap ID:

Automatically notify Support: No

User response: Complete the following steps:

1. Check the CMM or FSM event log for any fan or cooling related issues.
2. Make sure that the airflow at the front and rear of the chassis is not obstructed and that fillers are in place and correctly installed.
3. Make sure that the room temperature is within operating specifications.
4. Make sure that the DIMM baffles are in place.
5. If the problem persists and there are no other DIMMs with the same indication, replace the DIMM.

Related Links:

- "Removing a DIMM" on page 589
- "Installing a DIMM" on page 591

806f090c-2008ffff memory device 8 in Group 1 on Subsystem System Memory Throttled

Explanation: This message is for the use case when an implementation has detected Memory has been Throttled.

May also be shown as 806f090c2008ffff or 0x806f090c2008ffff

Severity: Info

Alert Category: System - Other

Serviceable: No

CIM Information: Prefix: PLAT and **ID:** 0142

SNMP Trap ID:

Automatically notify Support: No

User response: Complete the following steps:

1. Check the CMM or FSM event log for any fan or cooling related issues.
2. Make sure that the airflow at the front and rear of the chassis is not obstructed and that fillers are in place and correctly installed.
3. Make sure that the room temperature is within operating specifications.
4. Make sure that the DIMM baffles are in place.
5. If the problem persists and there are no other DIMMs with the same indication, replace the DIMM.

Related Links:

- "Removing a DIMM" on page 589
- "Installing a DIMM" on page 591

806f090c-20090109 memory device 9 in Group 1 on Subsystem System Memory Throttled

Explanation: This message is for the use case when an implementation has detected Memory has been Throttled.

May also be shown as 806f090c20090109 or 0x806f090c20090109

Severity: Info

Alert Category: System - Other

Serviceable: No

CIM Information: Prefix: PLAT and **ID:** 0142

SNMP Trap ID:

Automatically notify Support: No

User response: Complete the following steps:

1. Check the CMM or FSM event log for any fan or cooling related issues.
2. Make sure that the airflow at the front and rear of the chassis is not obstructed and that fillers are in place and correctly installed.
3. Make sure that the room temperature is within operating specifications.
4. Make sure that the DIMM baffles are in place.
5. If the problem persists and there are no other DIMMs with the same indication, replace the DIMM.

Related Links:

- "Removing a DIMM" on page 589
- "Installing a DIMM" on page 591

806f090c-2009ffff memory device 9 in Group 1 on Subsystem System Memory Throttled

Explanation: This message is for the use case when an implementation has detected Memory has been Throttled.

May also be shown as 806f090c2009ffff or 0x806f090c2009ffff

Severity: Info

Alert Category: System - Other

Serviceable: No

CIM Information: Prefix: PLAT and **ID:** 0142

SNMP Trap ID:

Automatically notify Support: No

User response: Complete the following steps:

1. Check the CMM or FSM event log for any fan or cooling related issues.
2. Make sure that the airflow at the front and rear of the chassis is not obstructed and that fillers are in place and correctly installed.
3. Make sure that the room temperature is within operating specifications.
4. Make sure that the DIMM baffles are in place.
5. If the problem persists and there are no other DIMMs with the same indication, replace the DIMM.

Related Links:

- "Removing a DIMM" on page 589
- "Installing a DIMM" on page 591

806f090c-200a010a memory device 10 in Group 1 on Subsystem System Memory Throttled

Explanation: This message is for the use case when an implementation has detected Memory has been Throttled.

May also be shown as 806f090c200a010a or 0x806f090c200a010a

Severity: Info

Alert Category: System - Other

Serviceable: No

CIM Information: Prefix: PLAT and **ID:** 0142

SNMP Trap ID:

Automatically notify Support: No

User response: Complete the following steps:

1. Check the CMM or FSM event log for any fan or cooling related issues.
2. Make sure that the airflow at the front and rear of the chassis is not obstructed and that fillers are in place and correctly installed.
3. Make sure that the room temperature is within operating specifications.
4. Make sure that the DIMM baffles are in place.
5. If the problem persists and there are no other DIMMs with the same indication, replace the DIMM.

Related Links:

- "Removing a DIMM" on page 589
- "Installing a DIMM" on page 591

806f090c-200affff memory device 10 in Group 1 on Subsystem System Memory Throttled

Explanation: This message is for the use case when an implementation has detected Memory has been Throttled.

May also be shown as 806f090c200affff or 0x806f090c200affff

Severity: Info

Alert Category: System - Other

Serviceable: No

CIM Information: Prefix: PLAT and **ID:** 0142

SNMP Trap ID:

Automatically notify Support: No

User response: Complete the following steps:

1. Check the CMM or FSM event log for any fan or cooling related issues.
2. Make sure that the airflow at the front and rear of the chassis is not obstructed and that fillers are in place and correctly installed.
3. Make sure that the room temperature is within operating specifications.
4. Make sure that the DIMM baffles are in place.
5. If the problem persists and there are no other DIMMs with the same indication, replace the DIMM.

Related Links:

- "Removing a DIMM" on page 589
- "Installing a DIMM" on page 591

806f090c-200b010b memory device 11 in Group 1 on Subsystem System Memory Throttled

Explanation: This message is for the use case when an implementation has detected Memory has been Throttled.

May also be shown as 806f090c200b010b or 0x806f090c200b010b

Severity: Info

Alert Category: System - Other

Serviceable: No

CIM Information: Prefix: PLAT and **ID:** 0142

SNMP Trap ID:

Automatically notify Support: No

User response: Complete the following steps:

1. Check the CMM or FSM event log for any fan or cooling related issues.
2. Make sure that the airflow at the front and rear of the chassis is not obstructed and that fillers are in place and correctly installed.
3. Make sure that the room temperature is within operating specifications.
4. Make sure that the DIMM baffles are in place.
5. If the problem persists and there are no other DIMMs with the same indication, replace the DIMM.

Related Links:

- "Removing a DIMM" on page 589
- "Installing a DIMM" on page 591

806f090c-200bffff memory device 11 in Group 1 on Subsystem System Memory Throttled

Explanation: This message is for the use case when an implementation has detected Memory has been Throttled.

May also be shown as 806f090c200bffff or 0x806f090c200bffff

Severity: Info

Alert Category: System - Other

Serviceable: No

CIM Information: Prefix: PLAT and **ID:** 0142

SNMP Trap ID:

Automatically notify Support: No

User response: Complete the following steps:

1. Check the CMM or FSM event log for any fan or cooling related issues.
2. Make sure that the airflow at the front and rear of the chassis is not obstructed and that fillers are in place and correctly installed.
3. Make sure that the room temperature is within operating specifications.
4. Make sure that the DIMM baffles are in place.
5. If the problem persists and there are no other DIMMs with the same indication, replace the DIMM.

Related Links:

- "Removing a DIMM" on page 589
- "Installing a DIMM" on page 591

806f090c-200c010c memory device 12 in Group 1 on Subsystem System Memory Throttled

Explanation: This message is for the use case when an implementation has detected Memory has been Throttled.

May also be shown as 806f090c200c010c or 0x806f090c200c010c

Severity: Info

Alert Category: System - Other

Serviceable: No

CIM Information: Prefix: PLAT and **ID:** 0142

SNMP Trap ID:

Automatically notify Support: No

User response: Complete the following steps:

1. Check the CMM or FSM event log for any fan or cooling related issues.
2. Make sure that the airflow at the front and rear of the chassis is not obstructed and that fillers are in place and correctly installed.
3. Make sure that the room temperature is within operating specifications.
4. Make sure that the DIMM baffles are in place.
5. If the problem persists and there are no other DIMMs with the same indication, replace the DIMM.

Related Links:

- "Removing a DIMM" on page 589
- "Installing a DIMM" on page 591

806f090c-200cffff memory device 12 in Group 1 on Subsystem System Memory Throttled

Explanation: This message is for the use case when an implementation has detected Memory has been Throttled.

May also be shown as 806f090c200cffff or 0x806f090c200cffff

Severity: Info

Alert Category: System - Other

Serviceable: No

CIM Information: Prefix: PLAT and **ID:** 0142

SNMP Trap ID:

Automatically notify Support: No

User response: Complete the following steps:

1. Check the CMM or FSM event log for any fan or cooling related issues.
2. Make sure that the airflow at the front and rear of the chassis is not obstructed and that fillers are in place and correctly installed.
3. Make sure that the room temperature is within operating specifications.
4. Make sure that the DIMM baffles are in place.
5. If the problem persists and there are no other DIMMs with the same indication, replace the DIMM.

Related Links:

- "Removing a DIMM" on page 589
- "Installing a DIMM" on page 591

806f090c-200d010d memory device 13 in Group 1 on Subsystem System Memory Throttled

Explanation: This message is for the use case when an implementation has detected Memory has been Throttled.

May also be shown as 806f090c200d010d or 0x806f090c200d010d

Severity: Info

Alert Category: System - Other

Serviceable: No

CIM Information: Prefix: PLAT and **ID:** 0142

SNMP Trap ID:

Automatically notify Support: No

User response: Complete the following steps:

1. Check the CMM or FSM event log for any fan or cooling related issues.
2. Make sure that the airflow at the front and rear of the chassis is not obstructed and that fillers are in place and correctly installed.
3. Make sure that the room temperature is within operating specifications.
4. Make sure that the DIMM baffles are in place.
5. If the problem persists and there are no other DIMMs with the same indication, replace the DIMM.

Related Links:

- "Removing a DIMM" on page 589
- "Installing a DIMM" on page 591

806f090c-200dffff memory device 13 in Group 1 on Subsystem System Memory Throttled

Explanation: This message is for the use case when an implementation has detected Memory has been Throttled.

May also be shown as 806f090c200dffff or 0x806f090c200dffff

Severity: Info

Alert Category: System - Other

Serviceable: No

CIM Information: Prefix: PLAT and **ID:** 0142

SNMP Trap ID:

Automatically notify Support: No

User response: Complete the following steps:

1. Check the CMM or FSM event log for any fan or cooling related issues.
2. Make sure that the airflow at the front and rear of the chassis is not obstructed and that fillers are in place and correctly installed.
3. Make sure that the room temperature is within operating specifications.
4. Make sure that the DIMM baffles are in place.
5. If the problem persists and there are no other DIMMs with the same indication, replace the DIMM.

Related Links:

- "Removing a DIMM" on page 589
- "Installing a DIMM" on page 591

806f090c-200e010e memory device 14 in Group 1 on Subsystem System Memory Throttled

Explanation: This message is for the use case when an implementation has detected Memory has been Throttled.

May also be shown as 806f090c200e010e or 0x806f090c200e010e

Severity: Info

Alert Category: System - Other

Serviceable: No

CIM Information: Prefix: PLAT and **ID:** 0142

SNMP Trap ID:

Automatically notify Support: No

User response: Complete the following steps:

1. Check the CMM or FSM event log for any fan or cooling related issues.
2. Make sure that the airflow at the front and rear of the chassis is not obstructed and that fillers are in place and correctly installed.
3. Make sure that the room temperature is within operating specifications.
4. Make sure that the DIMM baffles are in place.
5. If the problem persists and there are no other DIMMs with the same indication, replace the DIMM.

Related Links:

- "Removing a DIMM" on page 589
- "Installing a DIMM" on page 591

806f090c-200effff memory device 14 in Group 1 on Subsystem System Memory Throttled

Explanation: This message is for the use case when an implementation has detected Memory has been Throttled.

May also be shown as 806f090c200effff or 0x806f090c200effff

Severity: Info

Alert Category: System - Other

Serviceable: No

CIM Information: Prefix: PLAT and **ID:** 0142

SNMP Trap ID:

Automatically notify Support: No

User response: Complete the following steps:

1. Check the CMM or FSM event log for any fan or cooling related issues.
2. Make sure that the airflow at the front and rear of the chassis is not obstructed and that fillers are in place and correctly installed.
3. Make sure that the room temperature is within operating specifications.
4. Make sure that the DIMM baffles are in place.
5. If the problem persists and there are no other DIMMs with the same indication, replace the DIMM.

Related Links:

- "Removing a DIMM" on page 589
- "Installing a DIMM" on page 591

806f090c-200f010f memory device 15 in Group 1 on Subsystem System Memory Throttled

Explanation: This message is for the use case when an implementation has detected Memory has been Throttled.

May also be shown as 806f090c200f010f or 0x806f090c200f010f

Severity: Info

Alert Category: System - Other

Serviceable: No

CIM Information: Prefix: PLAT and **ID:** 0142

SNMP Trap ID:

Automatically notify Support: No

User response: Complete the following steps:

1. Check the CMM or FSM event log for any fan or cooling related issues.
2. Make sure that the airflow at the front and rear of the chassis is not obstructed and that fillers are in place and correctly installed.
3. Make sure that the room temperature is within operating specifications.
4. Make sure that the DIMM baffles are in place.
5. If the problem persists and there are no other DIMMs with the same indication, replace the DIMM.

Related Links:

- "Removing a DIMM" on page 589
- "Installing a DIMM" on page 591

806f090c-200fffff memory device 15 in Group 1 on Subsystem System Memory Throttled

Explanation: This message is for the use case when an implementation has detected Memory has been Throttled.

May also be shown as 806f090c200fffff or 0x806f090c200fffff

Severity: Info

Alert Category: System - Other

Serviceable: No

CIM Information: Prefix: PLAT and **ID:** 0142

SNMP Trap ID:

Automatically notify Support: No

User response: Complete the following steps:

1. Check the CMM or FSM event log for any fan or cooling related issues.
2. Make sure that the airflow at the front and rear of the chassis is not obstructed and that fillers are in place and correctly installed.
3. Make sure that the room temperature is within operating specifications.
4. Make sure that the DIMM baffles are in place.
5. If the problem persists and there are no other DIMMs with the same indication, replace the DIMM.

Related Links:

- "Removing a DIMM" on page 589
- "Installing a DIMM" on page 591

806f090c-20100110 memory device 16 in Group 1 on Subsystem System Memory Throttled

Explanation: This message is for the use case when an implementation has detected Memory has been Throttled.

May also be shown as 806f090c20100110 or 0x806f090c20100110

Severity: Info

Alert Category: System - Other

Serviceable: No

CIM Information: Prefix: PLAT and **ID:** 0142

SNMP Trap ID:

Automatically notify Support: No

User response: Complete the following steps:

1. Check the CMM or FSM event log for any fan or cooling related issues.
2. Make sure that the airflow at the front and rear of the chassis is not obstructed and that fillers are in place and correctly installed.
3. Make sure that the room temperature is within operating specifications.
4. Make sure that the DIMM baffles are in place.
5. If the problem persists and there are no other DIMMs with the same indication, replace the DIMM.

Related Links:

- "Removing a DIMM" on page 589
- "Installing a DIMM" on page 591

806f090c-2010ffff memory device 16 in Group 1 on Subsystem System Memory Throttled

Explanation: This message is for the use case when an implementation has detected Memory has been Throttled.

May also be shown as 806f090c2010ffff or 0x806f090c2010ffff

Severity: Info

Alert Category: System - Other

Serviceable: No

CIM Information: Prefix: PLAT and **ID:** 0142

SNMP Trap ID:

Automatically notify Support: No

User response: Complete the following steps:

1. Check the CMM or FSM event log for any fan or cooling related issues.
2. Make sure that the airflow at the front and rear of the chassis is not obstructed and that fillers are in place and correctly installed.
3. Make sure that the room temperature is within operating specifications.
4. Make sure that the DIMM baffles are in place.
5. If the problem persists and there are no other DIMMs with the same indication, replace the DIMM.

Related Links:

- "Removing a DIMM" on page 589
- "Installing a DIMM" on page 591

806f090c-20110111 memory device 17 in Group 1 on Subsystem System Memory Throttled

Explanation: This message is for the use case when an implementation has detected Memory has been Throttled.

May also be shown as 806f090c20110111 or 0x806f090c20110111

Severity: Info

Alert Category: System - Other

Serviceable: No

CIM Information: Prefix: PLAT and **ID:** 0142

SNMP Trap ID:

Automatically notify Support: No

User response: Complete the following steps:

1. Check the CMM or FSM event log for any fan or cooling related issues.
2. Make sure that the airflow at the front and rear of the chassis is not obstructed and that fillers are in place and correctly installed.
3. Make sure that the room temperature is within operating specifications.
4. Make sure that the DIMM baffles are in place.
5. If the problem persists and there are no other DIMMs with the same indication, replace the DIMM.

Related Links:

- "Removing a DIMM" on page 589
- "Installing a DIMM" on page 591

806f090c-2011ffff memory device 17 in Group 1 on Subsystem System Memory Throttled

Explanation: This message is for the use case when an implementation has detected Memory has been Throttled.

May also be shown as 806f090c2011ffff or 0x806f090c2011ffff

Severity: Info

Alert Category: System - Other

Serviceable: No

CIM Information: Prefix: PLAT and **ID:** 0142

SNMP Trap ID:

Automatically notify Support: No

User response: Complete the following steps:

1. Check the CMM or FSM event log for any fan or cooling related issues.
2. Make sure that the airflow at the front and rear of the chassis is not obstructed and that fillers are in place and correctly installed.
3. Make sure that the room temperature is within operating specifications.
4. Make sure that the DIMM baffles are in place.
5. If the problem persists and there are no other DIMMs with the same indication, replace the DIMM.

Related Links:

- "Removing a DIMM" on page 589
- "Installing a DIMM" on page 591

806f090c-20120112 memory device 18 in Group 1 on Subsystem System Memory Throttled

Explanation: This message is for the use case when an implementation has detected Memory has been Throttled.

May also be shown as 806f090c20120112 or 0x806f090c20120112

Severity: Info

Alert Category: System - Other

Serviceable: No

CIM Information: Prefix: PLAT and **ID:** 0142

SNMP Trap ID:

Automatically notify Support: No

User response: Complete the following steps:

1. Check the CMM or FSM event log for any fan or cooling related issues.
2. Make sure that the airflow at the front and rear of the chassis is not obstructed and that fillers are in place and correctly installed.
3. Make sure that the room temperature is within operating specifications.
4. Make sure that the DIMM baffles are in place.
5. If the problem persists and there are no other DIMMs with the same indication, replace the DIMM.

Related Links:

- "Removing a DIMM" on page 589
- "Installing a DIMM" on page 591

806f090c-2012ffff memory device 18 in Group 1 on Subsystem System Memory Throttled

Explanation: This message is for the use case when an implementation has detected Memory has been Throttled.

May also be shown as 806f090c2012ffff or 0x806f090c2012ffff

Severity: Info

Alert Category: System - Other

Serviceable: No

CIM Information: Prefix: PLAT and **ID:** 0142

SNMP Trap ID:

Automatically notify Support: No

User response: Complete the following steps:

1. Check the CMM or FSM event log for any fan or cooling related issues.
2. Make sure that the airflow at the front and rear of the chassis is not obstructed and that fillers are in place and correctly installed.
3. Make sure that the room temperature is within operating specifications.
4. Make sure that the DIMM baffles are in place.
5. If the problem persists and there are no other DIMMs with the same indication, replace the DIMM.

Related Links:

- "Removing a DIMM" on page 589
- "Installing a DIMM" on page 591

806f090c-20130113 memory device 19 in Group 1 on Subsystem System Memory Throttled

Explanation: This message is for the use case when an implementation has detected Memory has been Throttled.

May also be shown as 806f090c20130113 or 0x806f090c20130113

Severity: Info

Alert Category: System - Other

Serviceable: No

CIM Information: Prefix: PLAT and **ID:** 0142

SNMP Trap ID:

Automatically notify Support: No

User response: Complete the following steps:

1. Check the CMM or FSM event log for any fan or cooling related issues.
2. Make sure that the airflow at the front and rear of the chassis is not obstructed and that fillers are in place and correctly installed.
3. Make sure that the room temperature is within operating specifications.
4. Make sure that the DIMM baffles are in place.
5. If the problem persists and there are no other DIMMs with the same indication, replace the DIMM.

Related Links:

- "Removing a DIMM" on page 589
- "Installing a DIMM" on page 591

806f090c-2013ffff memory device 19 in Group 1 on Subsystem System Memory Throttled

Explanation: This message is for the use case when an implementation has detected Memory has been Throttled.

May also be shown as 806f090c2013ffff or 0x806f090c2013ffff

Severity: Info

Alert Category: System - Other

Serviceable: No

CIM Information: Prefix: PLAT and **ID:** 0142

SNMP Trap ID:

Automatically notify Support: No

User response: Complete the following steps:

1. Check the CMM or FSM event log for any fan or cooling related issues.
2. Make sure that the airflow at the front and rear of the chassis is not obstructed and that fillers are in place and correctly installed.
3. Make sure that the room temperature is within operating specifications.
4. Make sure that the DIMM baffles are in place.
5. If the problem persists and there are no other DIMMs with the same indication, replace the DIMM.

Related Links:

- "Removing a DIMM" on page 589
- "Installing a DIMM" on page 591

806f090c-20140114 memory device 20 in Group 1 on Subsystem System Memory Throttled

Explanation: This message is for the use case when an implementation has detected Memory has been Throttled.

May also be shown as 806f090c20140114 or 0x806f090c20140114

Severity: Info

Alert Category: System - Other

Serviceable: No

CIM Information: Prefix: PLAT and **ID:** 0142

SNMP Trap ID:

Automatically notify Support: No

User response: Complete the following steps:

1. Check the CMM or FSM event log for any fan or cooling related issues.
2. Make sure that the airflow at the front and rear of the chassis is not obstructed and that fillers are in place and correctly installed.
3. Make sure that the room temperature is within operating specifications.
4. Make sure that the DIMM baffles are in place.
5. If the problem persists and there are no other DIMMs with the same indication, replace the DIMM.

Related Links:

- "Removing a DIMM" on page 589
- "Installing a DIMM" on page 591

806f090c-2014ffff memory device 20 in Group 1 on Subsystem System Memory Throttled

Explanation: This message is for the use case when an implementation has detected Memory has been Throttled.

May also be shown as 806f090c2014ffff or 0x806f090c2014ffff

Severity: Info

Alert Category: System - Other

Serviceable: No

CIM Information: Prefix: PLAT and **ID:** 0142

SNMP Trap ID:

Automatically notify Support: No

User response: Complete the following steps:

1. Check the CMM or FSM event log for any fan or cooling related issues.
2. Make sure that the airflow at the front and rear of the chassis is not obstructed and that fillers are in place and correctly installed.
3. Make sure that the room temperature is within operating specifications.
4. Make sure that the DIMM baffles are in place.
5. If the problem persists and there are no other DIMMs with the same indication, replace the DIMM.

Related Links:

- "Removing a DIMM" on page 589
- "Installing a DIMM" on page 591

806f090c-20150115 memory device 21 in Group 1 on Subsystem System Memory Throttled

Explanation: This message is for the use case when an implementation has detected Memory has been Throttled.

May also be shown as 806f090c20150115 or 0x806f090c20150115

Severity: Info

Alert Category: System - Other

Serviceable: No

CIM Information: Prefix: PLAT and **ID:** 0142

SNMP Trap ID:

Automatically notify Support: No

User response: Complete the following steps:

1. Check the CMM or FSM event log for any fan or cooling related issues.
2. Make sure that the airflow at the front and rear of the chassis is not obstructed and that fillers are in place and correctly installed.
3. Make sure that the room temperature is within operating specifications.
4. Make sure that the DIMM baffles are in place.
5. If the problem persists and there are no other DIMMs with the same indication, replace the DIMM.

Related Links:

- "Removing a DIMM" on page 589
- "Installing a DIMM" on page 591

806f090c-2015ffff memory device 21 in Group 1 on Subsystem System Memory Throttled

Explanation: This message is for the use case when an implementation has detected Memory has been Throttled.

May also be shown as 806f090c2015ffff or 0x806f090c2015ffff

Severity: Info

Alert Category: System - Other

Serviceable: No

CIM Information: Prefix: PLAT and **ID:** 0142

SNMP Trap ID:

Automatically notify Support: No

User response: Complete the following steps:

1. Check the CMM or FSM event log for any fan or cooling related issues.
2. Make sure that the airflow at the front and rear of the chassis is not obstructed and that fillers are in place and correctly installed.
3. Make sure that the room temperature is within operating specifications.
4. Make sure that the DIMM baffles are in place.
5. If the problem persists and there are no other DIMMs with the same indication, replace the DIMM.

Related Links:

- "Removing a DIMM" on page 589
- "Installing a DIMM" on page 591

806f090c-20160116 memory device 22 in Group 1 on Subsystem System Memory Throttled

Explanation: This message is for the use case when an implementation has detected Memory has been Throttled.

May also be shown as 806f090c20160116 or 0x806f090c20160116

Severity: Info

Alert Category: System - Other

Serviceable: No

CIM Information: Prefix: PLAT and **ID:** 0142

SNMP Trap ID:

Automatically notify Support: No

User response: Complete the following steps:

1. Check the CMM or FSM event log for any fan or cooling related issues.
2. Make sure that the airflow at the front and rear of the chassis is not obstructed and that fillers are in place and correctly installed.
3. Make sure that the room temperature is within operating specifications.
4. Make sure that the DIMM baffles are in place.
5. If the problem persists and there are no other DIMMs with the same indication, replace the DIMM.

Related Links:

- "Removing a DIMM" on page 589
- "Installing a DIMM" on page 591

806f090c-2016ffff memory device 22 in Group 1 on Subsystem System Memory Throttled

Explanation: This message is for the use case when an implementation has detected Memory has been Throttled.

May also be shown as 806f090c2016ffff or 0x806f090c2016ffff

Severity: Info

Alert Category: System - Other

Serviceable: No

CIM Information: Prefix: PLAT and **ID:** 0142

SNMP Trap ID:

Automatically notify Support: No

User response: Complete the following steps:

1. Check the CMM or FSM event log for any fan or cooling related issues.
2. Make sure that the airflow at the front and rear of the chassis is not obstructed and that fillers are in place and correctly installed.
3. Make sure that the room temperature is within operating specifications.
4. Make sure that the DIMM baffles are in place.
5. If the problem persists and there are no other DIMMs with the same indication, replace the DIMM.

Related Links:

- "Removing a DIMM" on page 589
- "Installing a DIMM" on page 591

806f090c-20170117 memory device 23 in Group 1 on Subsystem System Memory Throttled

Explanation: This message is for the use case when an implementation has detected Memory has been Throttled.

May also be shown as 806f090c20170117 or 0x806f090c20170117

Severity: Info

Alert Category: System - Other

Serviceable: No

CIM Information: Prefix: PLAT and **ID:** 0142

SNMP Trap ID:

Automatically notify Support: No

User response: Complete the following steps:

1. Check the CMM or FSM event log for any fan or cooling related issues.
2. Make sure that the airflow at the front and rear of the chassis is not obstructed and that fillers are in place and correctly installed.
3. Make sure that the room temperature is within operating specifications.
4. Make sure that the DIMM baffles are in place.
5. If the problem persists and there are no other DIMMs with the same indication, replace the DIMM.

Related Links:

- "Removing a DIMM" on page 589
- "Installing a DIMM" on page 591

806f090c-2017ffff memory device 23 in Group 1 on Subsystem System Memory Throttled

Explanation: This message is for the use case when an implementation has detected Memory has been Throttled.

May also be shown as 806f090c2017ffff or 0x806f090c2017ffff

Severity: Info

Alert Category: System - Other

Serviceable: No

CIM Information: Prefix: PLAT and **ID:** 0142

SNMP Trap ID:

Automatically notify Support: No

User response: Complete the following steps:

1. Check the CMM or FSM event log for any fan or cooling related issues.
2. Make sure that the airflow at the front and rear of the chassis is not obstructed and that fillers are in place and correctly installed.
3. Make sure that the room temperature is within operating specifications.
4. Make sure that the DIMM baffles are in place.
5. If the problem persists and there are no other DIMMs with the same indication, replace the DIMM.

Related Links:

- "Removing a DIMM" on page 589
- "Installing a DIMM" on page 591

806f090c-20180118 memory device 24 in Group 1 on Subsystem System Memory Throttled

Explanation: This message is for the use case when an implementation has detected Memory has been Throttled.

May also be shown as 806f090c20180118 or 0x806f090c20180118

Severity: Info

Alert Category: System - Other

Serviceable: No

CIM Information: Prefix: PLAT and **ID:** 0142

SNMP Trap ID:

Automatically notify Support: No

User response: Complete the following steps:

1. Check the CMM or FSM event log for any fan or cooling related issues.
2. Make sure that the airflow at the front and rear of the chassis is not obstructed and that fillers are in place and correctly installed.
3. Make sure that the room temperature is within operating specifications.
4. Make sure that the DIMM baffles are in place.
5. If the problem persists and there are no other DIMMs with the same indication, replace the DIMM.

Related Links:

- "Removing a DIMM" on page 589
- "Installing a DIMM" on page 591

806f090c-2018ffff memory device 24 in Group 1 on Subsystem System Memory Throttled

Explanation: This message is for the use case when an implementation has detected Memory has been Throttled.

May also be shown as 806f090c2018ffff or 0x806f090c2018ffff

Severity: Info

Alert Category: System - Other

Serviceable: No

CIM Information: Prefix: PLAT and **ID:** 0142

SNMP Trap ID:

Automatically notify Support: No

User response: Complete the following steps:

1. Check the CMM or FSM event log for any fan or cooling related issues.
2. Make sure that the airflow at the front and rear of the chassis is not obstructed and that fillers are in place and correctly installed.
3. Make sure that the room temperature is within operating specifications.
4. Make sure that the DIMM baffles are in place.
5. If the problem persists and there are no other DIMMs with the same indication, replace the DIMM.

Related Links:

- "Removing a DIMM" on page 589
- "Installing a DIMM" on page 591

806f0a07-0301ffff CPU 1 is operating in a Degraded State.

Explanation: The processor is being throttled due to thermal or power conditions.

May also be shown as 806f0a070301ffff or 0x806f0a070301ffff

Severity: Warning

Alert Category: Warning - CPU

Serviceable: Yes

CIM Information: Prefix: PLAT and **ID:** 0038

SNMP Trap ID: 42

Automatically notify Support: No

User response: Complete the following steps:

1. Check the CMM or FSM event log for any fan- or cooling-related issues or power-related issues..
2. Make sure that the airflow at the front and rear of the chassis is not obstructed and that fillers are in place and correctly installed.
3. Make sure that the room temperature is within operating specifications.

806f0a07-0302ffff CPU 2 is operating in a Degraded State.

Explanation: The processor is being throttled.

May also be shown as 806f0a070302ffff or 0x806f0a070302ffff

Severity: Warning

Alert Category: Warning - CPU

Serviceable: Yes

CIM Information: Prefix: PLAT and **ID:** 0038

SNMP Trap ID: 42

Automatically notify Support: No

User response: Complete the following steps:

1. Check the CMM or FSM event log for any fan- or cooling-related issues or power-related issues..
2. Make sure that the airflow at the front and rear of the chassis is not obstructed and that fillers are in place and correctly installed.
3. Make sure that the room temperature is within operating specifications.

806f0a07-2584ffff [ProcessorElementName] is operating in a Degraded State.

Explanation: The processor is being throttled.

May also be shown as 806f0a072584ffff or 0x806f0a072584ffff

Severity: Warning

Alert Category: Warning - CPU

Serviceable: Yes

CIM Information: Prefix: PLAT and **ID:** 0038

SNMP Trap ID: 42

Automatically notify Support: No

User response: All CPUs : One of CPUs

Complete the following steps:

1. Check the CMM or FSM event log for any fan- or cooling-related issues or power-related issues..

2. Make sure that the airflow at the front and rear of the chassis is not obstructed and that fillers are in place and correctly installed.
3. Make sure that the room temperature is within operating specifications.

806f0a0c-20010101 An Over-Temperature Condition has been detected on the memory device 1 in Group 1 on Subsystem System Memory.

Explanation: An overtemperature condition has been detected in the DIMM in DIMM connector 1.

May also be shown as 806f0a0c20010101 or 0x806f0a0c20010101

Severity: Error

Alert Category: Critical - Temperature

Serviceable: Yes

CIM Information: Prefix: PLAT and **ID:** 0146

SNMP Trap ID: 0

Automatically notify Support: No

User response: Complete the following steps until the problem is solved:

1. Check the Chassis Management Module or Flex System Manager event log for any fan- or cooling-related issues.
2. Make sure that the airflow at the front and rear of the chassis is not obstructed and that fillers are in place and correctly installed.
3. Make sure that the room temperature is within operating specifications.
4. Make sure that the DIMM baffles are in place.
5. If the problem remains and no other DIMMs have the same indication, replace the DIMM.

Related Links:

- "Removing a DIMM" on page 589
- "Installing a DIMM" on page 591

806f0a0c-2001ffff An Over-Temperature Condition has been detected on the memory device 1 in Group 1 on Subsystem System Memory.

Explanation: An overtemperature condition has been detected in the DIMM in DIMM connector 1.

May also be shown as 806f0a0c2001ffff or 0x806f0a0c2001ffff

Severity: Error

Alert Category: Critical - Temperature

Serviceable: Yes

CIM Information: Prefix: PLAT and **ID:** 0146

SNMP Trap ID: 0

Automatically notify Support: No

User response: Complete the following steps until the problem is solved:

1. Check the Chassis Management Module or Flex System Manager event log for any fan- or cooling-related issues.
2. Make sure that the airflow at the front and rear of the chassis is not obstructed and that fillers are in place and correctly installed.
3. Make sure that the room temperature is within operating specifications.
4. Make sure that the DIMM baffles are in place.
5. If the problem remains and no other DIMMs have the same indication, replace the DIMM.

Related Links:

- "Removing a DIMM" on page 589
- "Installing a DIMM" on page 591

806f0a0c-20020102 An Over-Temperature Condition has been detected on the memory device 2 in Group 1 on Subsystem System Memory.

Explanation: An overtemperature condition has been detected in the DIMM in DIMM connector 2.

May also be shown as 806f0a0c20020102 or 0x806f0a0c20020102

Severity: Error

Alert Category: Critical - Temperature

Serviceable: Yes

CIM Information: Prefix: PLAT and **ID:** 0146

SNMP Trap ID: 0

Automatically notify Support: No

User response: Complete the following steps until the problem is solved:

1. Check the Chassis Management Module or Flex System Manager event log for any fan- or cooling-related issues.
2. Make sure that the airflow at the front and rear of the chassis is not obstructed and that fillers are in place and correctly installed.
3. Make sure that the room temperature is within operating specifications.
4. Make sure that the DIMM baffles are in place.
5. If the problem remains and no other DIMMs have the same indication, replace the DIMM.

Related Links:

- "Removing a DIMM" on page 589
- "Installing a DIMM" on page 591

806f0a0c-2002ffff An Over-Temperature Condition has been detected on the memory device 2 in Group 1 on Subsystem System Memory.

Explanation: An overtemperature condition has been detected in the DIMM in DIMM connector 2.

May also be shown as 806f0a0c2002ffff or 0x806f0a0c2002ffff

Severity: Error

Alert Category: Critical - Temperature

Serviceable: Yes

CIM Information: Prefix: PLAT and **ID:** 0146

SNMP Trap ID: 0

Automatically notify Support: No

User response: Complete the following steps until the problem is solved:

1. Check the Chassis Management Module or Flex System Manager event log for any fan- or cooling-related issues.
2. Make sure that the airflow at the front and rear of the chassis is not obstructed and that fillers are in place and correctly installed.
3. Make sure that the room temperature is within operating specifications.
4. Make sure that the DIMM baffles are in place.
5. If the problem remains and no other DIMMs have the same indication, replace the DIMM.

Related Links:

- "Removing a DIMM" on page 589
- "Installing a DIMM" on page 591

806f0a0c-20030103 An Over-Temperature Condition has been detected on the memory device 3 in Group 1 on Subsystem System Memory.

Explanation: An overtemperature condition has been detected in the DIMM in DIMM connector 3.

May also be shown as 806f0a0c20030103 or 0x806f0a0c20030103

Severity: Error

Alert Category: Critical - Temperature

Serviceable: Yes

CIM Information: Prefix: PLAT and **ID:** 0146

SNMP Trap ID: 0

Automatically notify Support: No

User response: Complete the following steps until the problem is solved:

1. Check the Chassis Management Module or Flex System Manager event log for any fan- or cooling-related issues.
2. Make sure that the airflow at the front and rear of the chassis is not obstructed and that fillers are in place and correctly installed.
3. Make sure that the room temperature is within operating specifications.
4. Make sure that the DIMM baffles are in place.
5. If the problem remains and no other DIMMs have the same indication, replace the DIMM.

Related Links:

- "Removing a DIMM" on page 589
- "Installing a DIMM" on page 591

806f0a0c-2003ffff An Over-Temperature Condition has been detected on the memory device 3 in Group 1 on Subsystem System Memory.

Explanation: An overtemperature condition has been detected in the DIMM in DIMM connector 3.

May also be shown as 806f0a0c2003ffff or 0x806f0a0c2003ffff

Severity: Error

Alert Category: Critical - Temperature

Serviceable: Yes

CIM Information: Prefix: PLAT and **ID:** 0146

SNMP Trap ID: 0

Automatically notify Support: No

User response: Complete the following steps until the problem is solved:

1. Check the Chassis Management Module or Flex System Manager event log for any fan- or cooling-related issues.
2. Make sure that the airflow at the front and rear of the chassis is not obstructed and that fillers are in place and correctly installed.
3. Make sure that the room temperature is within operating specifications.
4. Make sure that the DIMM baffles are in place.
5. If the problem remains and no other DIMMs have the same indication, replace the DIMM.

Related Links:

- "Removing a DIMM" on page 589
- "Installing a DIMM" on page 591

806f0a0c-20040104 An Over-Temperature Condition has been detected on the memory device 4 in Group 1 on Subsystem System Memory.

Explanation: An overtemperature condition has been detected in the DIMM in DIMM connector 4.

May also be shown as 806f0a0c20040104 or 0x806f0a0c20040104

Severity: Error

Alert Category: Critical - Temperature

Serviceable: Yes

CIM Information: Prefix: PLAT and **ID:** 0146

SNMP Trap ID: 0

Automatically notify Support: No

User response: Complete the following steps until the problem is solved:

1. Check the Chassis Management Module or Flex System Manager event log for any fan- or cooling-related issues.
2. Make sure that the airflow at the front and rear of the chassis is not obstructed and that fillers are in place and correctly installed.
3. Make sure that the room temperature is within operating specifications.
4. Make sure that the DIMM baffles are in place.
5. If the problem remains and no other DIMMs have the same indication, replace the DIMM.

Related Links:

- "Removing a DIMM" on page 589
- "Installing a DIMM" on page 591

806f0a0c-2004ffff An Over-Temperature Condition has been detected on the memory device 4 in Group 1 on Subsystem System Memory.

Explanation: An overtemperature condition has been detected in the DIMM in DIMM connector 4.

May also be shown as 806f0a0c2004ffff or 0x806f0a0c2004ffff

Severity: Error

Alert Category: Critical - Temperature

Serviceable: Yes

CIM Information: Prefix: PLAT and **ID:** 0146

SNMP Trap ID: 0

Automatically notify Support: No

User response: Complete the following steps until the problem is solved:

1. Check the Chassis Management Module or Flex System Manager event log for any fan- or cooling-related issues.
2. Make sure that the airflow at the front and rear of the chassis is not obstructed and that fillers are in place and correctly installed.
3. Make sure that the room temperature is within operating specifications.
4. Make sure that the DIMM baffles are in place.
5. If the problem remains and no other DIMMs have the same indication, replace the DIMM.

Related Links:

- "Removing a DIMM" on page 589
- "Installing a DIMM" on page 591

806f0a0c-20050105 An Over-Temperature Condition has been detected on the memory device 5 in Group 1 on Subsystem System Memory.

Explanation: An overtemperature condition has been detected in the DIMM in DIMM connector 5.

May also be shown as 806f0a0c20050105 or 0x806f0a0c20050105

Severity: Error

Alert Category: Critical - Temperature

Serviceable: Yes

CIM Information: Prefix: PLAT and **ID:** 0146

SNMP Trap ID: 0

Automatically notify Support: No

User response: Complete the following steps until the problem is solved:

1. Check the Chassis Management Module or Flex System Manager event log for any fan- or cooling-related issues.
2. Make sure that the airflow at the front and rear of the chassis is not obstructed and that fillers are in place and correctly installed.
3. Make sure that the room temperature is within operating specifications.
4. Make sure that the DIMM baffles are in place.
5. If the problem remains and no other DIMMs have the same indication, replace the DIMM.

Related Links:

- "Removing a DIMM" on page 589
- "Installing a DIMM" on page 591

806f0a0c-2005ffff An Over-Temperature Condition has been detected on the memory device 5 in Group 1 on Subsystem System Memory.

Explanation: An overtemperature condition has been detected in the DIMM in DIMM connector 5.

May also be shown as 806f0a0c2005ffff or 0x806f0a0c2005ffff

Severity: Error

Alert Category: Critical - Temperature

Serviceable: Yes

CIM Information: Prefix: PLAT and **ID:** 0146

SNMP Trap ID: 0

Automatically notify Support: No

User response: Complete the following steps until the problem is solved:

1. Check the Chassis Management Module or Flex System Manager event log for any fan- or cooling-related issues.
2. Make sure that the airflow at the front and rear of the chassis is not obstructed and that fillers are in place and correctly installed.
3. Make sure that the room temperature is within operating specifications.
4. Make sure that the DIMM baffles are in place.
5. If the problem remains and no other DIMMs have the same indication, replace the DIMM.

Related Links:

- "Removing a DIMM" on page 589
- "Installing a DIMM" on page 591

806f0a0c-20060106 An Over-Temperature Condition has been detected on the memory device 6 in Group 1 on Subsystem System Memory.

Explanation: An overtemperature condition has been detected in the DIMM in DIMM connector 6.

May also be shown as 806f0a0c20060106 or 0x806f0a0c20060106

Severity: Error

Alert Category: Critical - Temperature

Serviceable: Yes

CIM Information: Prefix: PLAT and **ID:** 0146

SNMP Trap ID: 0

Automatically notify Support: No

User response: Complete the following steps until the problem is solved:

1. Check the Chassis Management Module or Flex System Manager event log for any fan- or cooling-related issues.
2. Make sure that the airflow at the front and rear of the chassis is not obstructed and that fillers are in place and correctly installed.
3. Make sure that the room temperature is within operating specifications.
4. Make sure that the DIMM baffles are in place.
5. If the problem remains and no other DIMMs have the same indication, replace the DIMM.

Related Links:

- "Removing a DIMM" on page 589
- "Installing a DIMM" on page 591

806f0a0c-2006ffff An Over-Temperature Condition has been detected on the memory device 6 in Group 1 on Subsystem System Memory.

Explanation: An overtemperature condition has been detected in the DIMM in DIMM connector 6.

May also be shown as 806f0a0c2006ffff or 0x806f0a0c2006ffff

Severity: Error

Alert Category: Critical - Temperature

Serviceable: Yes

CIM Information: Prefix: PLAT and **ID:** 0146

SNMP Trap ID: 0

Automatically notify Support: No

User response: Complete the following steps until the problem is solved:

1. Check the Chassis Management Module or Flex System Manager event log for any fan- or cooling-related issues.
2. Make sure that the airflow at the front and rear of the chassis is not obstructed and that fillers are in place and correctly installed.
3. Make sure that the room temperature is within operating specifications.
4. Make sure that the DIMM baffles are in place.
5. If the problem remains and no other DIMMs have the same indication, replace the DIMM.

Related Links:

- "Removing a DIMM" on page 589
- "Installing a DIMM" on page 591

806f0a0c-20070107 An Over-Temperature Condition has been detected on the memory device 7 in Group 1 on Subsystem System Memory.

Explanation: An overtemperature condition has been detected in the DIMM in DIMM connector 7.

May also be shown as 806f0a0c20070107 or 0x806f0a0c20070107

Severity: Error

Alert Category: Critical - Temperature

Serviceable: Yes

CIM Information: Prefix: PLAT and **ID:** 0146

SNMP Trap ID: 0

Automatically notify Support: No

User response: Complete the following steps until the problem is solved:

1. Check the Chassis Management Module or Flex System Manager event log for any fan- or cooling-related issues.
2. Make sure that the airflow at the front and rear of the chassis is not obstructed and that fillers are in place and correctly installed.
3. Make sure that the room temperature is within operating specifications.
4. Make sure that the DIMM baffles are in place.
5. If the problem remains and no other DIMMs have the same indication, replace the DIMM.

Related Links:

- "Removing a DIMM" on page 589
- "Installing a DIMM" on page 591

806f0a0c-2007ffff An Over-Temperature Condition has been detected on the memory device 7 in Group 1 on Subsystem System Memory.

Explanation: An overtemperature condition has been detected in the DIMM in DIMM connector 7.

May also be shown as 806f0a0c2007ffff or 0x806f0a0c2007ffff

Severity: Error

Alert Category: Critical - Temperature

Serviceable: Yes

CIM Information: Prefix: PLAT and **ID:** 0146

SNMP Trap ID: 0

Automatically notify Support: No

User response: Complete the following steps until the problem is solved:

1. Check the Chassis Management Module or Flex System Manager event log for any fan- or cooling-related issues.
2. Make sure that the airflow at the front and rear of the chassis is not obstructed and that fillers are in place and correctly installed.
3. Make sure that the room temperature is within operating specifications.
4. Make sure that the DIMM baffles are in place.
5. If the problem remains and no other DIMMs have the same indication, replace the DIMM.

Related Links:

- "Removing a DIMM" on page 589
- "Installing a DIMM" on page 591

806f0a0c-20080108 An Over-Temperature Condition has been detected on the memory device 8 in Group 1 on Subsystem System Memory.

Explanation: An overtemperature condition has been detected in the DIMM in DIMM connector 8.

May also be shown as 806f0a0c20080108 or 0x806f0a0c20080108

Severity: Error

Alert Category: Critical - Temperature

Serviceable: Yes

CIM Information: Prefix: PLAT and **ID:** 0146

SNMP Trap ID: 0

Automatically notify Support: No

User response: Complete the following steps until the problem is solved:

1. Check the Chassis Management Module or Flex System Manager event log for any fan- or cooling-related issues.
2. Make sure that the airflow at the front and rear of the chassis is not obstructed and that fillers are in place and correctly installed.
3. Make sure that the room temperature is within operating specifications.
4. Make sure that the DIMM baffles are in place.
5. If the problem remains and no other DIMMs have the same indication, replace the DIMM.

Related Links:

- "Removing a DIMM" on page 589
- "Installing a DIMM" on page 591

806f0a0c-2008ffff An Over-Temperature Condition has been detected on the memory device 8 in Group 1 on Subsystem System Memory.

Explanation: An overtemperature condition has been detected in the DIMM in DIMM connector 8.

May also be shown as 806f0a0c2008ffff or 0x806f0a0c2008ffff

Severity: Error

Alert Category: Critical - Temperature

Serviceable: Yes

CIM Information: Prefix: PLAT and **ID:** 0146

SNMP Trap ID: 0

Automatically notify Support: No

User response: Complete the following steps until the problem is solved:

1. Check the Chassis Management Module or Flex System Manager event log for any fan- or cooling-related issues.
2. Make sure that the airflow at the front and rear of the chassis is not obstructed and that fillers are in place and correctly installed.
3. Make sure that the room temperature is within operating specifications.
4. Make sure that the DIMM baffles are in place.
5. If the problem remains and no other DIMMs have the same indication, replace the DIMM.

Related Links:

- "Removing a DIMM" on page 589
- "Installing a DIMM" on page 591

806f0a0c-20090109 An Over-Temperature Condition has been detected on the memory device 9 in Group 1 on Subsystem System Memory.

Explanation: An overtemperature condition has been detected in the DIMM in DIMM connector 9.

May also be shown as 806f0a0c20090109 or 0x806f0a0c20090109

Severity: Error

Alert Category: Critical - Temperature

Serviceable: Yes

CIM Information: Prefix: PLAT and **ID:** 0146

SNMP Trap ID: 0

Automatically notify Support: No

User response: Complete the following steps until the problem is solved:

1. Check the Chassis Management Module or Flex System Manager event log for any fan- or cooling-related issues.
2. Make sure that the airflow at the front and rear of the chassis is not obstructed and that fillers are in place and correctly installed.
3. Make sure that the room temperature is within operating specifications.
4. Make sure that the DIMM baffles are in place.
5. If the problem remains and no other DIMMs have the same indication, replace the DIMM.

Related Links:

- "Removing a DIMM" on page 589
- "Installing a DIMM" on page 591

806f0a0c-2009ffff An Over-Temperature Condition has been detected on the memory device 9 in Group 1 on Subsystem System Memory.

Explanation: An overtemperature condition has been detected in the DIMM in DIMM connector 9.

May also be shown as 806f0a0c2009ffff or 0x806f0a0c2009ffff

Severity: Error

Alert Category: Critical - Temperature

Serviceable: Yes

CIM Information: Prefix: PLAT and **ID:** 0146

SNMP Trap ID: 0

Automatically notify Support: No

User response: Complete the following steps until the problem is solved:

1. Check the Chassis Management Module or Flex System Manager event log for any fan- or cooling-related issues.
2. Make sure that the airflow at the front and rear of the chassis is not obstructed and that fillers are in place and correctly installed.
3. Make sure that the room temperature is within operating specifications.
4. Make sure that the DIMM baffles are in place.
5. If the problem remains and no other DIMMs have the same indication, replace the DIMM.

Related Links:

- "Removing a DIMM" on page 589
- "Installing a DIMM" on page 591

806f0a0c-200a010a An Over-Temperature Condition has been detected on the memory device 10 in Group 1 on Subsystem System Memory.

Explanation: An overtemperature condition has been detected in the DIMM in DIMM connector 10.

May also be shown as 806f0a0c200a010a or 0x806f0a0c200a010a

Severity: Error

Alert Category: Critical - Temperature

Serviceable: Yes

CIM Information: Prefix: PLAT and **ID:** 0146

SNMP Trap ID: 0

Automatically notify Support: No

User response: Complete the following steps until the problem is solved:

1. Check the Chassis Management Module or Flex System Manager event log for any fan- or cooling-related issues.
2. Make sure that the airflow at the front and rear of the chassis is not obstructed and that fillers are in place and correctly installed.
3. Make sure that the room temperature is within operating specifications.
4. Make sure that the DIMM baffles are in place.
5. If the problem remains and no other DIMMs have the same indication, replace the DIMM.

Related Links:

- "Removing a DIMM" on page 589
- "Installing a DIMM" on page 591

806f0a0c-200affff An Over-Temperature Condition has been detected on the memory device 10 in Group 1 on Subsystem System Memory.

Explanation: An overtemperature condition has been detected in the DIMM in DIMM connector 10.

May also be shown as 806f0a0c200affff or 0x806f0a0c200affff

Severity: Error

Alert Category: Critical - Temperature

Serviceable: Yes

CIM Information: Prefix: PLAT and **ID:** 0146

SNMP Trap ID: 0

Automatically notify Support: No

User response: Complete the following steps until the problem is solved:

1. Check the Chassis Management Module or Flex System Manager event log for any fan- or cooling-related issues.
2. Make sure that the airflow at the front and rear of the chassis is not obstructed and that fillers are in place and correctly installed.
3. Make sure that the room temperature is within operating specifications.
4. Make sure that the DIMM baffles are in place.
5. If the problem remains and no other DIMMs have the same indication, replace the DIMM.

Related Links:

- "Removing a DIMM" on page 589
- "Installing a DIMM" on page 591

806f0a0c-200b010b An Over-Temperature Condition has been detected on the memory device 11 in Group 1 on Subsystem System Memory.

Explanation: An overtemperature condition has been detected in the DIMM in DIMM connector 11.

May also be shown as 806f0a0c200b010b or 0x806f0a0c200b010b

Severity: Error

Alert Category: Critical - Temperature

Serviceable: Yes

CIM Information: Prefix: PLAT and **ID:** 0146

SNMP Trap ID: 0

Automatically notify Support: No

User response: Complete the following steps until the problem is solved:

1. Check the Chassis Management Module or Flex System Manager event log for any fan- or cooling-related issues.
2. Make sure that the airflow at the front and rear of the chassis is not obstructed and that fillers are in place and correctly installed.
3. Make sure that the room temperature is within operating specifications.
4. Make sure that the DIMM baffles are in place.
5. If the problem remains and no other DIMMs have the same indication, replace the DIMM.

Related Links:

- "Removing a DIMM" on page 589
- "Installing a DIMM" on page 591

806f0a0c-200bffff An Over-Temperature Condition has been detected on the memory device 11 in Group 1 on Subsystem System Memory.

Explanation: An overtemperature condition has been detected in the DIMM in DIMM connector 11.

May also be shown as 806f0a0c200bffff or 0x806f0a0c200bffff

Severity: Error

Alert Category: Critical - Temperature

Serviceable: Yes

CIM Information: Prefix: PLAT and **ID:** 0146

SNMP Trap ID: 0

Automatically notify Support: No

User response: Complete the following steps until the problem is solved:

1. Check the Chassis Management Module or Flex System Manager event log for any fan- or cooling-related issues.
2. Make sure that the airflow at the front and rear of the chassis is not obstructed and that fillers are in place and correctly installed.
3. Make sure that the room temperature is within operating specifications.
4. Make sure that the DIMM baffles are in place.
5. If the problem remains and no other DIMMs have the same indication, replace the DIMM.

Related Links:

- "Removing a DIMM" on page 589
- "Installing a DIMM" on page 591

806f0a0c-200c010c An Over-Temperature Condition has been detected on the memory device 12 in Group 1 on Subsystem System Memory.

Explanation: An overtemperature condition has been detected in the DIMM in DIMM connector 12.

May also be shown as 806f0a0c200c010c or 0x806f0a0c200c010c

Severity: Error

Alert Category: Critical - Temperature

Serviceable: Yes

CIM Information: Prefix: PLAT and **ID:** 0146

SNMP Trap ID: 0

Automatically notify Support: No

User response: Complete the following steps until the problem is solved:

1. Check the Chassis Management Module or Flex System Manager event log for any fan- or cooling-related issues.
2. Make sure that the airflow at the front and rear of the chassis is not obstructed and that fillers are in place and correctly installed.
3. Make sure that the room temperature is within operating specifications.
4. Make sure that the DIMM baffles are in place.
5. If the problem remains and no other DIMMs have the same indication, replace the DIMM.

Related Links:

- "Removing a DIMM" on page 589
- "Installing a DIMM" on page 591

806f0a0c-200cffff An Over-Temperature Condition has been detected on the memory device 12 in Group 1 on Subsystem System Memory.

Explanation: An overtemperature condition has been detected in the DIMM in DIMM connector 12.

May also be shown as 806f0a0c200cffff or 0x806f0a0c200cffff

Severity: Error

Alert Category: Critical - Temperature

Serviceable: Yes

CIM Information: Prefix: PLAT and **ID:** 0146

SNMP Trap ID: 0

Automatically notify Support: No

User response: Complete the following steps until the problem is solved:

1. Check the Chassis Management Module or Flex System Manager event log for any fan- or cooling-related issues.
2. Make sure that the airflow at the front and rear of the chassis is not obstructed and that fillers are in place and correctly installed.
3. Make sure that the room temperature is within operating specifications.
4. Make sure that the DIMM baffles are in place.
5. If the problem remains and no other DIMMs have the same indication, replace the DIMM.

Related Links:

- "Removing a DIMM" on page 589
- "Installing a DIMM" on page 591

806f0a0c-200d010d An Over-Temperature Condition has been detected on the memory device 13 in Group 1 on Subsystem System Memory.

Explanation: An overtemperature condition has been detected in the DIMM in DIMM connector 13.

May also be shown as 806f0a0c200d010d or 0x806f0a0c200d010d

Severity: Error

Alert Category: Critical - Temperature

Serviceable: Yes

CIM Information: Prefix: PLAT and **ID:** 0146

SNMP Trap ID: 0

Automatically notify Support: No

User response: Complete the following steps until the problem is solved:

1. Check the Chassis Management Module or Flex System Manager event log for any fan- or cooling-related issues.
2. Make sure that the airflow at the front and rear of the chassis is not obstructed and that fillers are in place and correctly installed.
3. Make sure that the room temperature is within operating specifications.
4. Make sure that the DIMM baffles are in place.
5. If the problem remains and no other DIMMs have the same indication, replace the DIMM.

Related Links:

- "Removing a DIMM" on page 589
- "Installing a DIMM" on page 591

806f0a0c-200dffff An Over-Temperature Condition has been detected on the memory device 13 in Group 1 on Subsystem System Memory.

Explanation: An overtemperature condition has been detected in the DIMM in DIMM connector 13.

May also be shown as 806f0a0c200dffff or 0x806f0a0c200dffff

Severity: Error

Alert Category: Critical - Temperature

Serviceable: Yes

CIM Information: Prefix: PLAT and **ID:** 0146

SNMP Trap ID: 0

Automatically notify Support: No

User response: Complete the following steps until the problem is solved:

1. Check the Chassis Management Module or Flex System Manager event log for any fan- or cooling-related issues.
2. Make sure that the airflow at the front and rear of the chassis is not obstructed and that fillers are in place and correctly installed.
3. Make sure that the room temperature is within operating specifications.
4. Make sure that the DIMM baffles are in place.
5. If the problem remains and no other DIMMs have the same indication, replace the DIMM.

Related Links:

- "Removing a DIMM" on page 589
- "Installing a DIMM" on page 591

806f0a0c-200e010e An Over-Temperature Condition has been detected on the memory device 14 in Group 1 on Subsystem System Memory.

Explanation: An overtemperature condition has been detected in the DIMM in DIMM connector 14.

May also be shown as 806f0a0c200e010e or 0x806f0a0c200e010e

Severity: Error

Alert Category: Critical - Temperature

Serviceable: Yes

CIM Information: Prefix: PLAT and **ID:** 0146

SNMP Trap ID: 0

Automatically notify Support: No

User response: Complete the following steps until the problem is solved:

1. Check the Chassis Management Module or Flex System Manager event log for any fan- or cooling-related issues.
2. Make sure that the airflow at the front and rear of the chassis is not obstructed and that fillers are in place and correctly installed.
3. Make sure that the room temperature is within operating specifications.
4. Make sure that the DIMM baffles are in place.
5. If the problem remains and no other DIMMs have the same indication, replace the DIMM.

Related Links:

- "Removing a DIMM" on page 589
- "Installing a DIMM" on page 591

806f0a0c-200effff An Over-Temperature Condition has been detected on the memory device 14 in Group 1 on Subsystem System Memory.

Explanation: An overtemperature condition has been detected in the DIMM in DIMM connector 14.

May also be shown as 806f0a0c200effff or 0x806f0a0c200effff

Severity: Error

Alert Category: Critical - Temperature

Serviceable: Yes

CIM Information: Prefix: PLAT and **ID:** 0146

SNMP Trap ID: 0

Automatically notify Support: No

User response: Complete the following steps until the problem is solved:

1. Check the Chassis Management Module or Flex System Manager event log for any fan- or cooling-related issues.
2. Make sure that the airflow at the front and rear of the chassis is not obstructed and that fillers are in place and correctly installed.
3. Make sure that the room temperature is within operating specifications.
4. Make sure that the DIMM baffles are in place.
5. If the problem remains and no other DIMMs have the same indication, replace the DIMM.

Related Links:

- "Removing a DIMM" on page 589
- "Installing a DIMM" on page 591

806f0a0c-200f010f An Over-Temperature Condition has been detected on the memory device 15 in Group 1 on Subsystem System Memory.

Explanation: An overtemperature condition has been detected in the DIMM in DIMM connector 15.

May also be shown as 806f0a0c200f010f or 0x806f0a0c200f010f

Severity: Error

Alert Category: Critical - Temperature

Serviceable: Yes

CIM Information: Prefix: PLAT and **ID:** 0146

SNMP Trap ID: 0

Automatically notify Support: No

User response: Complete the following steps until the problem is solved:

1. Check the Chassis Management Module or Flex System Manager event log for any fan- or cooling-related issues.
2. Make sure that the airflow at the front and rear of the chassis is not obstructed and that fillers are in place and correctly installed.
3. Make sure that the room temperature is within operating specifications.
4. Make sure that the DIMM baffles are in place.
5. If the problem remains and no other DIMMs have the same indication, replace the DIMM.

Related Links:

- "Removing a DIMM" on page 589
- "Installing a DIMM" on page 591

806f0a0c-200fffff An Over-Temperature Condition has been detected on the memory device 15 in Group 1 on Subsystem System Memory.

Explanation: An overtemperature condition has been detected in the DIMM in DIMM connector 15.

May also be shown as 806f0a0c200fffff or 0x806f0a0c200fffff

Severity: Error

Alert Category: Critical - Temperature

Serviceable: Yes

CIM Information: Prefix: PLAT and **ID:** 0146

SNMP Trap ID: 0

Automatically notify Support: No

User response: Complete the following steps until the problem is solved:

1. Check the Chassis Management Module or Flex System Manager event log for any fan- or cooling-related issues.
2. Make sure that the airflow at the front and rear of the chassis is not obstructed and that fillers are in place and correctly installed.
3. Make sure that the room temperature is within operating specifications.
4. Make sure that the DIMM baffles are in place.
5. If the problem remains and no other DIMMs have the same indication, replace the DIMM.

Related Links:

- "Removing a DIMM" on page 589
- "Installing a DIMM" on page 591

806f0a0c-20100110 An Over-Temperature Condition has been detected on the memory device 16 in Group 1 on Subsystem System Memory.

Explanation: An overtemperature condition has been detected in the DIMM in DIMM connector 16.

May also be shown as 806f0a0c20100110 or 0x806f0a0c20100110

Severity: Error

Alert Category: Critical - Temperature

Serviceable: Yes

CIM Information: Prefix: PLAT and **ID:** 0146

SNMP Trap ID: 0

Automatically notify Support: No

User response: Complete the following steps until the problem is solved:

1. Check the Chassis Management Module or Flex System Manager event log for any fan- or cooling-related issues.
2. Make sure that the airflow at the front and rear of the chassis is not obstructed and that fillers are in place and correctly installed.
3. Make sure that the room temperature is within operating specifications.
4. Make sure that the DIMM baffles are in place.
5. If the problem remains and no other DIMMs have the same indication, replace the DIMM.

Related Links:

- "Removing a DIMM" on page 589
- "Installing a DIMM" on page 591

806f0a0c-2010ffff An Over-Temperature Condition has been detected on the memory device 16 in Group 1 on Subsystem System Memory.

Explanation: An overtemperature condition has been detected in the DIMM in DIMM connector 16.

May also be shown as 806f0a0c2010ffff or 0x806f0a0c2010ffff

Severity: Error

Alert Category: Critical - Temperature

Serviceable: Yes

CIM Information: Prefix: PLAT and **ID:** 0146

SNMP Trap ID: 0

Automatically notify Support: No

User response: Complete the following steps until the problem is solved:

1. Check the Chassis Management Module or Flex System Manager event log for any fan- or cooling-related issues.
2. Make sure that the airflow at the front and rear of the chassis is not obstructed and that fillers are in place and correctly installed.
3. Make sure that the room temperature is within operating specifications.
4. Make sure that the DIMM baffles are in place.
5. If the problem remains and no other DIMMs have the same indication, replace the DIMM.

Related Links:

- "Removing a DIMM" on page 589
- "Installing a DIMM" on page 591

806f0a0c-20110111 An Over-Temperature Condition has been detected on the memory device 17 in Group 1 on Subsystem System Memory.

Explanation: An overtemperature condition has been detected in the DIMM in DIMM connector 17.

May also be shown as 806f0a0c20110111 or 0x806f0a0c20110111

Severity: Error

Alert Category: Critical - Temperature

Serviceable: Yes

CIM Information: Prefix: PLAT and **ID:** 0146

SNMP Trap ID: 0

Automatically notify Support: No

User response: Complete the following steps until the problem is solved:

1. Check the Chassis Management Module or Flex System Manager event log for any fan- or cooling-related issues.
2. Make sure that the airflow at the front and rear of the chassis is not obstructed and that fillers are in place and correctly installed.
3. Make sure that the room temperature is within operating specifications.
4. Make sure that the DIMM baffles are in place.
5. If the problem remains and no other DIMMs have the same indication, replace the DIMM.

Related Links:

- "Removing a DIMM" on page 589
- "Installing a DIMM" on page 591

806f0a0c-2011ffff An Over-Temperature Condition has been detected on the memory device 17 in Group 1 on Subsystem System Memory.

Explanation: An overtemperature condition has been detected in the DIMM in DIMM connector 17.

May also be shown as 806f0a0c2011ffff or 0x806f0a0c2011ffff

Severity: Error

Alert Category: Critical - Temperature

Serviceable: Yes

CIM Information: Prefix: PLAT and **ID:** 0146

SNMP Trap ID: 0

Automatically notify Support: No

User response: Complete the following steps until the problem is solved:

1. Check the Chassis Management Module or Flex System Manager event log for any fan- or cooling-related issues.
2. Make sure that the airflow at the front and rear of the chassis is not obstructed and that fillers are in place and correctly installed.
3. Make sure that the room temperature is within operating specifications.
4. Make sure that the DIMM baffles are in place.
5. If the problem remains and no other DIMMs have the same indication, replace the DIMM.

Related Links:

- "Removing a DIMM" on page 589
- "Installing a DIMM" on page 591

806f0a0c-20120112 An Over-Temperature Condition has been detected on the memory device 18 in Group 1 on Subsystem System Memory.

Explanation: An overtemperature condition has been detected in the DIMM in DIMM connector 18.

May also be shown as 806f0a0c20120112 or 0x806f0a0c20120112

Severity: Error

Alert Category: Critical - Temperature

Serviceable: Yes

CIM Information: Prefix: PLAT and **ID:** 0146

SNMP Trap ID: 0

Automatically notify Support: No

User response: Complete the following steps until the problem is solved:

1. Check the Chassis Management Module or Flex System Manager event log for any fan- or cooling-related issues.
2. Make sure that the airflow at the front and rear of the chassis is not obstructed and that fillers are in place and correctly installed.
3. Make sure that the room temperature is within operating specifications.
4. Make sure that the DIMM baffles are in place.
5. If the problem remains and no other DIMMs have the same indication, replace the DIMM.

Related Links:

- "Removing a DIMM" on page 589
- "Installing a DIMM" on page 591

806f0a0c-2012ffff An Over-Temperature Condition has been detected on the memory device 18 in Group 1 on Subsystem System Memory.

Explanation: An overtemperature condition has been detected in the DIMM in DIMM connector 18.

May also be shown as 806f0a0c2012ffff or 0x806f0a0c2012ffff

Severity: Error

Alert Category: Critical - Temperature

Serviceable: Yes

CIM Information: Prefix: PLAT and **ID:** 0146

SNMP Trap ID: 0

Automatically notify Support: No

User response: Complete the following steps until the problem is solved:

1. Check the Chassis Management Module or Flex System Manager event log for any fan- or cooling-related issues.
2. Make sure that the airflow at the front and rear of the chassis is not obstructed and that fillers are in place and correctly installed.
3. Make sure that the room temperature is within operating specifications.
4. Make sure that the DIMM baffles are in place.
5. If the problem remains and no other DIMMs have the same indication, replace the DIMM.

Related Links:

- "Removing a DIMM" on page 589
- "Installing a DIMM" on page 591

806f0a0c-20130113 An Over-Temperature Condition has been detected on the memory device 19 in Group 1 on Subsystem System Memory.

Explanation: An overtemperature condition has been detected in the DIMM in DIMM connector 19.

May also be shown as 806f0a0c20130113 or 0x806f0a0c20130113

Severity: Error

Alert Category: Critical - Temperature

Serviceable: Yes

CIM Information: Prefix: PLAT and **ID:** 0146

SNMP Trap ID: 0

Automatically notify Support: No

User response: Complete the following steps until the problem is solved:

1. Check the Chassis Management Module or Flex System Manager event log for any fan- or cooling-related issues.
2. Make sure that the airflow at the front and rear of the chassis is not obstructed and that fillers are in place and correctly installed.
3. Make sure that the room temperature is within operating specifications.
4. Make sure that the DIMM baffles are in place.
5. If the problem remains and no other DIMMs have the same indication, replace the DIMM.

Related Links:

- "Removing a DIMM" on page 589
- "Installing a DIMM" on page 591

806f0a0c-2013ffff An Over-Temperature Condition has been detected on the memory device 19 in Group 1 on Subsystem System Memory.

Explanation: An overtemperature condition has been detected in the DIMM in DIMM connector 19.

May also be shown as 806f0a0c2013ffff or 0x806f0a0c2013ffff

Severity: Error

Alert Category: Critical - Temperature

Serviceable: Yes

CIM Information: Prefix: PLAT and **ID:** 0146

SNMP Trap ID: 0

Automatically notify Support: No

User response: Complete the following steps until the problem is solved:

1. Check the Chassis Management Module or Flex System Manager event log for any fan- or cooling-related issues.
2. Make sure that the airflow at the front and rear of the chassis is not obstructed and that fillers are in place and correctly installed.
3. Make sure that the room temperature is within operating specifications.
4. Make sure that the DIMM baffles are in place.
5. If the problem remains and no other DIMMs have the same indication, replace the DIMM.

Related Links:

- "Removing a DIMM" on page 589
- "Installing a DIMM" on page 591

806f0a0c-20140114 An Over-Temperature Condition has been detected on the memory device 20 in Group 1 on Subsystem System Memory.

Explanation: An overtemperature condition has been detected in the DIMM in DIMM connector 20.

May also be shown as 806f0a0c20140114 or 0x806f0a0c20140114

Severity: Error

Alert Category: Critical - Temperature

Serviceable: Yes

CIM Information: Prefix: PLAT and **ID:** 0146

SNMP Trap ID: 0

Automatically notify Support: No

User response: Complete the following steps until the problem is solved:

1. Check the Chassis Management Module or Flex System Manager event log for any fan- or cooling-related issues.
2. Make sure that the airflow at the front and rear of the chassis is not obstructed and that fillers are in place and correctly installed.
3. Make sure that the room temperature is within operating specifications.
4. Make sure that the DIMM baffles are in place.
5. If the problem remains and no other DIMMs have the same indication, replace the DIMM.

Related Links:

- "Removing a DIMM" on page 589
- "Installing a DIMM" on page 591

806f0a0c-2014ffff An Over-Temperature Condition has been detected on the memory device 20 in Group 1 on Subsystem System Memory.

Explanation: An overtemperature condition has been detected in the DIMM in DIMM connector 20.

May also be shown as 806f0a0c2014ffff or 0x806f0a0c2014ffff

Severity: Error

Alert Category: Critical - Temperature

Serviceable: Yes

CIM Information: Prefix: PLAT and **ID:** 0146

SNMP Trap ID: 0

Automatically notify Support: No

User response: Complete the following steps until the problem is solved:

1. Check the Chassis Management Module or Flex System Manager event log for any fan- or cooling-related issues.
2. Make sure that the airflow at the front and rear of the chassis is not obstructed and that fillers are in place and correctly installed.
3. Make sure that the room temperature is within operating specifications.
4. Make sure that the DIMM baffles are in place.
5. If the problem remains and no other DIMMs have the same indication, replace the DIMM.

Related Links:

- "Removing a DIMM" on page 589
- "Installing a DIMM" on page 591

806f0a0c-20150115 An Over-Temperature Condition has been detected on the memory device 21 in Group 1 on Subsystem System Memory.

Explanation: An overtemperature condition has been detected in the DIMM in DIMM connector 21.

May also be shown as 806f0a0c20150115 or 0x806f0a0c20150115

Severity: Error

Alert Category: Critical - Temperature

Serviceable: Yes

CIM Information: Prefix: PLAT and **ID:** 0146

SNMP Trap ID: 0

Automatically notify Support: No

User response: Complete the following steps until the problem is solved:

1. Check the Chassis Management Module or Flex System Manager event log for any fan- or cooling-related issues.
2. Make sure that the airflow at the front and rear of the chassis is not obstructed and that fillers are in place and correctly installed.
3. Make sure that the room temperature is within operating specifications.
4. Make sure that the DIMM baffles are in place.
5. If the problem remains and no other DIMMs have the same indication, replace the DIMM.

Related Links:

- "Removing a DIMM" on page 589
- "Installing a DIMM" on page 591

806f0a0c-2015ffff An Over-Temperature Condition has been detected on the memory device 21 in Group 1 on Subsystem System Memory.

Explanation: An overtemperature condition has been detected in the DIMM in DIMM connector 21.

May also be shown as 806f0a0c2015ffff or 0x806f0a0c2015ffff

Severity: Error

Alert Category: Critical - Temperature

Serviceable: Yes

CIM Information: Prefix: PLAT and **ID:** 0146

SNMP Trap ID: 0

Automatically notify Support: No

User response: Complete the following steps until the problem is solved:

1. Check the Chassis Management Module or Flex System Manager event log for any fan- or cooling-related issues.
2. Make sure that the airflow at the front and rear of the chassis is not obstructed and that fillers are in place and correctly installed.
3. Make sure that the room temperature is within operating specifications.
4. Make sure that the DIMM baffles are in place.
5. If the problem remains and no other DIMMs have the same indication, replace the DIMM.

Related Links:

- "Removing a DIMM" on page 589
- "Installing a DIMM" on page 591

806f0a0c-20160116 An Over-Temperature Condition has been detected on the memory device 22 in Group 1 on Subsystem System Memory.

Explanation: An overtemperature condition has been detected in the DIMM in DIMM connector 22.

May also be shown as 806f0a0c20160116 or 0x806f0a0c20160116

Severity: Error

Alert Category: Critical - Temperature

Serviceable: Yes

CIM Information: Prefix: PLAT and **ID:** 0146

SNMP Trap ID: 0

Automatically notify Support: No

User response: Complete the following steps until the problem is solved:

1. Check the Chassis Management Module or Flex System Manager event log for any fan- or cooling-related issues.
2. Make sure that the airflow at the front and rear of the chassis is not obstructed and that fillers are in place and correctly installed.
3. Make sure that the room temperature is within operating specifications.
4. Make sure that the DIMM baffles are in place.
5. If the problem remains and no other DIMMs have the same indication, replace the DIMM.

Related Links:

- "Removing a DIMM" on page 589
- "Installing a DIMM" on page 591

806f0a0c-2016ffff An Over-Temperature Condition has been detected on the memory device 22 in Group 1 on Subsystem System Memory.

Explanation: An overtemperature condition has been detected in the DIMM in DIMM connector 22.

May also be shown as 806f0a0c2016ffff or 0x806f0a0c2016ffff

Severity: Error

Alert Category: Critical - Temperature

Serviceable: Yes

CIM Information: Prefix: PLAT and **ID:** 0146

SNMP Trap ID: 0

Automatically notify Support: No

User response: Complete the following steps until the problem is solved:

1. Check the Chassis Management Module or Flex System Manager event log for any fan- or cooling-related issues.
2. Make sure that the airflow at the front and rear of the chassis is not obstructed and that fillers are in place and correctly installed.
3. Make sure that the room temperature is within operating specifications.
4. Make sure that the DIMM baffles are in place.
5. If the problem remains and no other DIMMs have the same indication, replace the DIMM.

Related Links:

- "Removing a DIMM" on page 589
- "Installing a DIMM" on page 591

806f0a0c-20170117 An Over-Temperature Condition has been detected on the memory device 23 in Group 1 on Subsystem System Memory.

Explanation: An overtemperature condition has been detected in the DIMM in DIMM connector 23.

May also be shown as 806f0a0c20170117 or 0x806f0a0c20170117

Severity: Error

Alert Category: Critical - Temperature

Serviceable: Yes

CIM Information: Prefix: PLAT and **ID:** 0146

SNMP Trap ID: 0

Automatically notify Support: No

User response: Complete the following steps until the problem is solved:

1. Check the Chassis Management Module or Flex System Manager event log for any fan- or cooling-related issues.
2. Make sure that the airflow at the front and rear of the chassis is not obstructed and that fillers are in place and correctly installed.
3. Make sure that the room temperature is within operating specifications.
4. Make sure that the DIMM baffles are in place.
5. If the problem remains and no other DIMMs have the same indication, replace the DIMM.

Related Links:

- "Removing a DIMM" on page 589
- "Installing a DIMM" on page 591

806f0a0c-2017ffff An Over-Temperature Condition has been detected on the memory device 23 in Group 1 on Subsystem System Memory.

Explanation: An overtemperature condition has been detected in the DIMM in DIMM connector 23.

May also be shown as 806f0a0c2017ffff or 0x806f0a0c2017ffff

Severity: Error

Alert Category: Critical - Temperature

Serviceable: Yes

CIM Information: Prefix: PLAT and **ID:** 0146

SNMP Trap ID: 0

Automatically notify Support: No

User response: Complete the following steps until the problem is solved:

1. Check the Chassis Management Module or Flex System Manager event log for any fan- or cooling-related issues.
2. Make sure that the airflow at the front and rear of the chassis is not obstructed and that fillers are in place and correctly installed.
3. Make sure that the room temperature is within operating specifications.
4. Make sure that the DIMM baffles are in place.
5. If the problem remains and no other DIMMs have the same indication, replace the DIMM.

Related Links:

- "Removing a DIMM" on page 589
- "Installing a DIMM" on page 591

806f0a0c-20180118 An Over-Temperature Condition has been detected on the memory device 24 in Group 1 on Subsystem System Memory.

Explanation: An overtemperature condition has been detected in the DIMM in DIMM connector 24.

May also be shown as 806f0a0c20180118 or 0x806f0a0c20180118

Severity: Error

Alert Category: Critical - Temperature

Serviceable: Yes

CIM Information: Prefix: PLAT and **ID:** 0146

SNMP Trap ID: 0

Automatically notify Support: No

User response: Complete the following steps until the problem is solved:

1. Check the Chassis Management Module or Flex System Manager event log for any fan- or cooling-related issues.
2. Make sure that the airflow at the front and rear of the chassis is not obstructed and that fillers are in place and correctly installed.
3. Make sure that the room temperature is within operating specifications.
4. Make sure that the DIMM baffles are in place.
5. If the problem remains and no other DIMMs have the same indication, replace the DIMM.

Related Links:

- "Removing a DIMM" on page 589
- "Installing a DIMM" on page 591

806f0a0c-2018ffff An Over-Temperature Condition has been detected on the memory device 24 in Group 1 on Subsystem System Memory.

Explanation: An overtemperature condition has been detected in the DIMM in DIMM connector 24.

May also be shown as 806f0a0c2018ffff or 0x806f0a0c2018ffff

Severity: Error

Alert Category: Critical - Temperature

Serviceable: Yes

CIM Information: Prefix: PLAT and **ID:** 0146

SNMP Trap ID: 0

Automatically notify Support: No

User response: Complete the following steps until the problem is solved:

1. Check the Chassis Management Module or Flex System Manager event log for any fan- or cooling-related issues.
2. Make sure that the airflow at the front and rear of the chassis is not obstructed and that fillers are in place and correctly installed.
3. Make sure that the room temperature is within operating specifications.
4. Make sure that the DIMM baffles are in place.
5. If the problem remains and no other DIMMs have the same indication, replace the DIMM.

Related Links:

- "Removing a DIMM" on page 589
- "Installing a DIMM" on page 591

806f0a13-2401ffff A Fatal Bus Error has occurred on bus SMBus.

Explanation: A fatal bus error has been detected on the System Management Bus.

May also be shown as 806f0a132401ffff or 0x806f0a132401ffff

Severity: Error

Alert Category: Critical - Other

Serviceable: Yes

CIM Information: Prefix: PLAT and **ID:** 0244

SNMP Trap ID: 50

Automatically notify Support: No

User response: This is a UEFI detected event. To find the UEFI diagnostic code for this event, in the information center, follow the instructions in "Finding the UEFI diagnostic code" under "UEFI diagnostic codes." Then, in the information center, open the topic for the UEFI diagnostic code and follow the instructions under "User response."

Related Links:

• "Finding the UEFI diagnostic code" on page 521

806f0a13-2582ffff A Fatal Bus Error has occurred on system [ComputerSystemElementName].

Explanation: This message is for the use case when an implementation has detected a Bus Fatal Error.

May also be shown as 806f0a132582ffff or 0x806f0a132582ffff

Severity: Error

Alert Category: Critical - Other

Serviceable: Yes

CIM Information: Prefix: PLAT and **ID:** 0244

SNMP Trap ID: 50

Automatically notify Support: No

User response: This is a UEFI detected event. The UEFI diagnostic code for this event can be found in the logged IMM message text. Please refer to the UEFI diagnostic code in the "UEFI diagnostic code" section of the Information Center for the appropriate user response.

Related Links:

• "Finding the UEFI diagnostic code" on page 521

806f0a13-2c03ffff A Fatal Bus Error has occurred on bus PEN Mezz3.

Explanation: A fatal bus error has been detected in the I/O expansion adapter in PCIe adapter slot 3 in the PCI expansion unit.

May also be shown as 806f0a132c03ffff or 0x806f0a132c03ffff

Severity: Error

Alert Category: Critical - Other

Serviceable: Yes

CIM Information: Prefix: PLAT and **ID:** 0244

SNMP Trap ID: 50

Automatically notify Support: No

User response: This is a UEFI detected event. To find the UEFI diagnostic code for this event, in the information center, follow the instructions in "Finding the UEFI diagnostic code" under "UEFI diagnostic codes." Then, in the information center, open the topic for the UEFI diagnostic code and follow the instructions under "User response."

Related Links:

- “Finding the UEFI diagnostic code” on page 521

806f0a13-2c04ffff A Fatal Bus Error has occurred on bus PEN Mezz4.

Explanation: A fatal bus error has been detected in the I/O expansion adapter in PCIe adapter slot 4 in the PCI expansion unit.

May also be shown as 806f0a132c04ffff or 0x806f0a132c04ffff

Severity: Error

Alert Category: Critical - Other

Serviceable: Yes

CIM Information: Prefix: PLAT and **ID:** 0244

SNMP Trap ID: 50

Automatically notify Support: No

User response: This is a UEFI detected event. To find the UEFI diagnostic code for this event, in the information center, follow the instructions in "Finding the UEFI diagnostic code" under "UEFI diagnostic codes." Then, in the information center, open the topic for the UEFI diagnostic code and follow the instructions under "User response."

Related Links:

- “Finding the UEFI diagnostic code” on page 521

806f0a13-3101ffff A Fatal Bus Error has occurred on bus PEN Slot1.

Explanation: A fatal bus error has been detected in the I/O expansion adapter in PCIe adapter slot 1 in the PCI expansion unit.

May also be shown as 806f0a133101ffff or 0x806f0a133101ffff

Severity: Error

Alert Category: Critical - Other

Serviceable: Yes

CIM Information: Prefix: PLAT and **ID:** 0244

SNMP Trap ID: 50

Automatically notify Support: No

User response: This is a UEFI detected event. To find the UEFI diagnostic code for this event, in the information center, follow the instructions in "Finding the UEFI diagnostic code" under "UEFI diagnostic codes." Then, in the information center, open the topic for the UEFI diagnostic code and follow the instructions under "User response."

Related Links:

- “Finding the UEFI diagnostic code” on page 521

806f0a13-3102ffff A Fatal Bus Error has occurred on bus PEN Slot2.

Explanation: A fatal bus error has been detected in the I/O expansion adapter in PCIe adapter slot 2 in the PCI expansion unit.

May also be shown as 806f0a133102ffff or 0x806f0a133102ffff

Severity: Error

Alert Category: Critical - Other

Serviceable: Yes

CIM Information: Prefix: PLAT and **ID:** 0244

SNMP Trap ID: 50

Automatically notify Support: No

User response: This is a UEFI detected event. To find the UEFI diagnostic code for this event, in the information center, follow the instructions in "Finding the UEFI diagnostic code" under "UEFI diagnostic codes." Then, in the information center, open the topic for the UEFI diagnostic code and follow the instructions under "User response."

Related Links:

- “Finding the UEFI diagnostic code” on page 521

806f0a13-3103ffff A Fatal Bus Error has occurred on bus PEN Slot3.

Explanation: A fatal bus error has been detected in the I/O expansion adapter in PCIe adapter slot 3 in the PCI expansion unit.

May also be shown as 806f0a133103ffff or 0x806f0a133103ffff

Severity: Error

Alert Category: Critical - Other

Serviceable: Yes

CIM Information: Prefix: PLAT and **ID:** 0244

SNMP Trap ID: 50

Automatically notify Support: No

User response: This is a UEFI detected event. To find the UEFI diagnostic code for this event, in the information center, follow the instructions in "Finding the UEFI diagnostic code" under "UEFI diagnostic codes." Then, in the information center, open the topic for the UEFI diagnostic code and follow the instructions under "User response."

Related Links:

- “Finding the UEFI diagnostic code” on page 521

806f0a13-3104ffff A Fatal Bus Error has occurred on bus PEN Slot4.

Explanation: A fatal bus error has been detected in the I/O expansion adapter in PCIe adapter slot 4 in the PCI expansion unit.

May also be shown as 806f0a133104ffff or 0x806f0a133104ffff

Severity: Error

Alert Category: Critical - Other

Serviceable: Yes

CIM Information: Prefix: PLAT and **ID:** 0244

SNMP Trap ID: 50

Automatically notify Support: No

User response: This is a UEFI detected event. To find the UEFI diagnostic code for this event, in the information center, follow the instructions in "Finding the UEFI diagnostic code" under "UEFI diagnostic codes." Then, in the information center, open the topic for the UEFI diagnostic code and follow the instructions under "User response."

Related Links:

- “Finding the UEFI diagnostic code” on page 521

81010202-0701ffff Sensor [NumericSensorElementName] has detected that a voltage is no longer going low.

Explanation: A previously low voltage has returned to above its specified threshold (sensor Planar 12V, Planar 3.3V, or Planar 5V).

May also be shown as 810102020701ffff or 0x810102020701ffff

Severity: Info

Alert Category: Critical - Voltage

Serviceable: No

CIM Information: **Prefix:** PLAT and **ID:** 0481

SNMP Trap ID: 1

Automatically notify Support: No

User response: Information only; no action is required.

81010202-2801ffff Sensor [NumericSensorElementName] has detected that the battery voltage is no longer low.

Explanation: The previously low CMOS battery voltage has returned to above its specified threshold.

May also be shown as 810102022801ffff or 0x810102022801ffff

Severity: Info

Alert Category: Critical - Voltage

Serviceable: No

CIM Information: **Prefix:** PLAT and **ID:** 0481

SNMP Trap ID: 1

Automatically notify Support: No

User response: Information only; no action is required.

81010701-3701ffff Sensor Inlet Temp has detected that the inlet temperature is no longer high.

Explanation: The previously high inlet temperature has returned to below its specified threshold.

May also be shown as 810107013701ffff or 0x810107013701ffff

Severity: Info

Alert Category: Warning - Temperature

Serviceable: No

CIM Information: **Prefix:** PLAT and **ID:** 0491

SNMP Trap ID: 12

Automatically notify Support: No

User response: Information only; no action is required.

81010701-3702ffff Numeric sensor PEN Inlet Temp going high (upper non-critical) has deasserted.

Explanation: The previously high inlet temperature has returned to below its specified threshold.

May also be shown as 810107013702ffff or 0x810107013702ffff

Severity: Info

Alert Category: Warning - Temperature

Serviceable: No

CIM Information: **Prefix:** PLAT and **ID:** 0491

SNMP Trap ID: 12

Automatically notify Support: No

User response: Information only; no action is required.

81010901-3701ffff Sensor Inlet Temp has detected that the inlet temperature is no longer high.

Explanation: The previously high inlet temperature has returned to below its specified threshold.

May also be shown as 810109013701ffff or 0x810109013701ffff

Severity: Info

Alert Category: Critical - Temperature

Serviceable: No

CIM Information: Prefix: PLAT and **ID:** 0495

SNMP Trap ID: 0

Automatically notify Support: No

User response: Information only; no action is required.

81010901-3702ffff Numeric sensor PEN Inlet Temp going high (upper critical) has deasserted.

Explanation: The previously high inlet temperature has returned to below its specified threshold.

May also be shown as 810109013702ffff or 0x810109013702ffff

Severity: Info

Alert Category: Critical - Temperature

Serviceable: No

CIM Information: Prefix: PLAT and **ID:** 0495

SNMP Trap ID: 0

Automatically notify Support: No

User response: Information only; no action is required.

81010902-0701ffff Sensor [NumericSensorElementName] has detected that a voltage is no longer high.

Explanation: A previously high voltage has returned to below its specified threshold (sensor Planar 12V, Planar 3.3V, or Planar 5V).

May also be shown as 810109020701ffff or 0x810109020701ffff

Severity: Info

Alert Category: Critical - Voltage

Serviceable: No

CIM Information: Prefix: PLAT and **ID:** 0495

SNMP Trap ID: 1

Automatically notify Support: No

User response: Information only; no action is required.

81010b01-3701ffff Numeric sensor Inlet Temp going high (upper non-recoverable) has deasserted.

Explanation: The previously high inlet temperature has returned to below its specified threshold.

May also be shown as 81010b013701ffff or 0x81010b013701ffff

Severity: Info

Alert Category: Critical - Temperature

Serviceable: No

CIM Information: Prefix: PLAT and **ID:** 0499

SNMP Trap ID: 0

Automatically notify Support: No

User response: Information only; no action is required.

81010b01-3702ffff Numeric sensor PEN Inlet Temp going high (upper non-recoverable) has deasserted.

Explanation: The previously high inlet temperature has returned to below its specified threshold.

May also be shown as 81010b013702ffff or 0x81010b013702ffff

Severity: Info

Alert Category: Critical - Temperature

Serviceable: No

CIM Information: Prefix: PLAT and **ID:** 0499

SNMP Trap ID: 0

Automatically notify Support: No

User response: Information only; no action is required.

81030006-2101ffff Sensor Sig Verify Fail has asserted.

Explanation: Signature verification of one of the Firmware Volumes or Capsules in UEFI BIOS failed.

May also be shown as 810300062101ffff or 0x810300062101ffff

Severity: Info

Alert Category: System - Other

Serviceable: No

CIM Information: Prefix: PLAT and **ID:** 0508

SNMP Trap ID:

Automatically notify Support: No

User response: Automatic BIOS Recovery (ABR) should cause system to come up from UEFI image in backup bank. Reflash UEFI image in the primary bank. If error does not persist no additional recovery action is required.

Related Links:

- "Updating firmware and device drivers" on page 21
- IBM Flex System and IBM PureFlex Firmware Updates Best Practices

---

8103010e-2581ffff Sensor Memory Resized has deasserted.

Explanation: This message is for the use case when an implementation has detected a Sensor has deasserted.

May also be shown as 8103010e2581ffff or 0x8103010e2581ffff

Severity: Info

Alert Category: System - Other

Serviceable: No

CIM Information: Prefix: PLAT and **ID:** 0509

SNMP Trap ID:

Automatically notify Support: No

User response: This is a UEFI detected event. To find the UEFI diagnostic code for this event, in the information center, follow the instructions in "Finding the UEFI diagnostic code" under "UEFI diagnostic codes." Then, in the information center, open the topic for the UEFI diagnostic code and follow the instructions under "User response."

Related Links:

- "Finding the UEFI diagnostic code" on page 521

81070101-030101ff Sensor CPU 1 Overtemp has gone from Noncritical state to Normal state.

Explanation: The previously high temperature of microprocessor 1 has returned to below its specified threshold.

May also be shown as 81070101030101ff or 0x81070101030101ff

Severity: Info

Alert Category: Warning - Temperature

Serviceable: No

CIM Information: Prefix: PLAT and **ID:** 0521

SNMP Trap ID: 12

Automatically notify Support: No

User response: Information only; no action is required.

81070101-0301ffff Sensor CPU 1 Overtemp has deasserted the transition from normal to non-critical state.

Explanation: This message is for the use case when an implementation has detected that a Sensor has deasserted a transition to non-critical from normal.

May also be shown as 810701010301ffff or 0x810701010301ffff

Severity: Info

Alert Category: Warning - Temperature

Serviceable: No

CIM Information: Prefix: PLAT and **ID:** 0521

SNMP Trap ID: 12

Automatically notify Support: No

User response: Information only; no action is required.

81070101-030201ff Sensor CPU 2 Overtemp has gone from Noncritical state to Normal state.

Explanation: The previously high temperature of microprocessor 2 has returned to below its specified threshold.

May also be shown as 81070101030201ff or 0x81070101030201ff

Severity: Info

Alert Category: Warning - Temperature

Serviceable: No

CIM Information: Prefix: PLAT and **ID:** 0521

SNMP Trap ID: 12

Automatically notify Support: No

User response: Information only; no action is required.

81070101-0302ffff Sensor CPU 2 Overtemp has deasserted the transition from normal to non-critical state.

Explanation: This message is for the use case when an implementation has detected that a Sensor has deasserted a transition to non-critical from normal.

May also be shown as 810701010302ffff or 0x810701010302ffff

Severity: Info

Alert Category: Warning - Temperature

Serviceable: No

CIM Information: **Prefix:** PLAT and **ID:** 0521

SNMP Trap ID: 12

Automatically notify Support: No

User response: Information only; no action is required.

81070101-2c01ffff Sensor Mezz Exp 1 temp has deassserted the transition from normal to non-critical state.

Explanation: The temperature of the I/O expansion adapter in I/O expansion connector 1 is no longer in a non-critical state.

May also be shown as 810701012c01ffff or 0x810701012c01ffff

Severity: Info

Alert Category: Warning - Temperature

Serviceable: No

CIM Information: **Prefix:** PLAT and **ID:** 0521

SNMP Trap ID: 12

Automatically notify Support: No

User response: Information only; no action is required.

81070101-2c02ffff Sensor Mezz Exp 2 temp has deassserted the transition from normal to non-critical state.

Explanation: The temperature of the I/O expansion adapter in I/O expansion connector 2 is no longer in a non-critical state.

May also be shown as 810701012c02ffff or 0x810701012c02ffff

Severity: Info

Alert Category: Warning - Temperature

Serviceable: No

CIM Information: **Prefix:** PLAT and **ID:** 0521

SNMP Trap ID: 12

Automatically notify Support: No

User response: Information only; no action is required.

81070101-2c03ffff Sensor PEN MExp 3 Temp has deassserted the transition from normal to non-critical state.

Explanation: The temperature of the PEN Messanne Expansion adapter in I/O expansion connector 3 is no longer in a non-critical state.

May also be shown as 810701012c03ffff or 0x810701012c03ffff

Severity: Info

Alert Category: Warning - Temperature

Serviceable: No

CIM Information: **Prefix:** PLAT and **ID:** 0521

SNMP Trap ID: 12

Automatically notify Support: No

User response: Information only; no action is required.

81070101-2c04ffff Sensor PEN MExp 4 Temp has deassserted the transition from normal to non-critical state.

Explanation: The temperature of the PEN Messanne Expansion adapter in I/O expansion connector 4 is no longer in a non-critical state.

May also be shown as 810701012c04ffff or 0x810701012c04ffff

Severity: Info

Alert Category: Warning - Temperature

Serviceable: No

CIM Information: Prefix: PLAT and **ID:** 0521

SNMP Trap ID: 12

Automatically notify Support: No

User response: Information only; no action is required.

81070101-3101ffff Sensor PCIE 1 Overtemp has deasserted the transition from normal to non-critical state.

Explanation: The temperature of the PCI expansion unit PCIe Card1 no longer in a non-critical state.

May also be shown as 810701013101ffff or 0x810701013101ffff

Severity: Info

Alert Category: Warning - Temperature

Serviceable: No

CIM Information: Prefix: PLAT and **ID:** 0521

SNMP Trap ID: 12

Automatically notify Support: No

User response: Information only; no action is required.

81070101-3102ffff Sensor PCIE 2 Overtemp has deasserted the transition from normal to non-critical state.

Explanation: The temperature of the PCI expansion unit PCIe Card2 no longer in a non-critical state.

May also be shown as 810701013102ffff or 0x810701013102ffff

Severity: Info

Alert Category: Warning - Temperature

Serviceable: No

CIM Information: Prefix: PLAT and **ID:** 0521

SNMP Trap ID: 12

Automatically notify Support: No

User response: Information only; no action is required.

81070101-3103ffff Sensor PCIE 3 Overtemp has deasserted the transition from normal to non-critical state.

Explanation: The temperature of the PCI expansion unit PCIe Card3 no longer in a non-critical state.

May also be shown as 810701013103ffff or 0x810701013103ffff

Severity: Info

Alert Category: Warning - Temperature

Serviceable: No

CIM Information: Prefix: PLAT and **ID:** 0521

SNMP Trap ID: 12

Automatically notify Support: No

User response: Information only; no action is required.

81070101-3104ffff Sensor PCIE 4 Overtemp has deasserted the transition from normal to non-critical state.

Explanation: The temperature of the PCI expansion unit PCIe Card4 no longer in a non-critical state.

May also be shown as 810701013104ffff or 0x810701013104ffff

Severity: Info

Alert Category: Warning - Temperature

Serviceable: No

CIM Information: Prefix: PLAT and **ID:** 0521

SNMP Trap ID: 12

Automatically notify Support: No

User response: Information only; no action is required.

81070101-3702ffff Sensor PEN Inlet Over T has deasserted the transition from normal to non-critical state.

Explanation: The PCIe Expansion Node Inlet temperature has returned to its specified threshold.

May also be shown as 810701013702ffff or 0x810701013702ffff

Severity: Info

Alert Category: Warning - Temperature

Serviceable: No

CIM Information: Prefix: PLAT and **ID:** 0521

SNMP Trap ID: 12

Automatically notify Support: No

User response: Information only; no action is required.

81070114-2201ffff Sensor TPM Lock has deasserted the transition from normal to non-critical state.

Explanation: The TPM Lock has returned to normal.

May also be shown as 810701142201ffff or 0x810701142201ffff

Severity: Info

Alert Category: Warning - Other

Serviceable: No

CIM Information: Prefix: PLAT and **ID:** 0521

SNMP Trap ID: 60

Automatically notify Support: No

User response: Information only; no action required.

81070201-2d01ffff Sensor PCH Overtemp has transitioned to a less severe state from critical.

Explanation: The temperature of the Platform Controller Hub no longer in a critical state.

May also be shown as 810702012d01ffff or 0x810702012d01ffff

Severity: Info

Alert Category: Critical - Temperature

Serviceable: No

CIM Information: **Prefix:** PLAT and **ID:** 0523

SNMP Trap ID: 0

Automatically notify Support: No

User response: Information only; no action is required.

81070201-3101ffff Sensor PCIE 1 Overtemp has transitioned to a less severe state from critical.

Explanation: The temperature of the PCI expansion unit PCIe Card1 no longer in a critical state.

May also be shown as 810702013101ffff or 0x810702013101ffff

Severity: Info

Alert Category: Critical - Temperature

Serviceable: No

CIM Information: **Prefix:** PLAT and **ID:** 0523

SNMP Trap ID: 0

Automatically notify Support: No

User response: Information only; no action is required.

81070201-3102ffff Sensor PCIE 2 Overtemp has transitioned to a less severe state from critical.

Explanation: The temperature of the PCI expansion unit PCIe Card2 no longer in a critical state.

May also be shown as 810702013102ffff or 0x810702013102ffff

Severity: Info

Alert Category: Critical - Temperature

Serviceable: No

CIM Information: **Prefix:** PLAT and **ID:** 0523

SNMP Trap ID: 0

Automatically notify Support: No

User response: Information only; no action is required.

81070201-3103ffff Sensor PCIE 3 Overtemp has transitioned to a less severe state from critical.

Explanation: The temperature of the PCI expansion unit PCIe Card3 no longer in a critical state.

May also be shown as 810702013103ffff or 0x810702013103ffff

Severity: Info

Alert Category: Critical - Temperature

Serviceable: No

CIM Information: **Prefix:** PLAT and **ID:** 0523

SNMP Trap ID: 0

Automatically notify Support: No

User response: Information only; no action is required.

81070201-3104ffff Sensor PCIE 4 Overtemp has transitioned to a less severe state from critical.

Explanation: The temperature of the PCI expansion unit PCIe Card4 no longer in a critical state.

May also be shown as 810702013104ffff or 0x810702013104ffff

Severity: Info

Alert Category: Critical - Temperature

Serviceable: No

CIM Information: Prefix: PLAT and **ID:** 0523

SNMP Trap ID: 0

Automatically notify Support: No

User response: Information only; no action is required.

81070202-0701ffff Sensor Planar Fault has gone from Criitical state to a less severe state.

Explanation: A failure is no longer detected in the system board.

May also be shown as 810702020701ffff or 0x810702020701ffff

Severity: Info

Alert Category: Critical - Voltage

Serviceable: No

CIM Information: Prefix: PLAT and **ID:** 0523

SNMP Trap ID: 1

Automatically notify Support: No

User response: Information only; no action is required.

81070202-1901ffff Sensor PEN Planar Fault has transitioned to a less severe state from critical.

Explanation: A failure is no longer detected in the PEN Planar board.

May also be shown as 810702021901ffff or 0x810702021901ffff

Severity: Info

Alert Category: Critical - Voltage

Serviceable: No

CIM Information: Prefix: PLAT and **ID:** 0523

SNMP Trap ID: 1

Automatically notify Support: No

User response: Information only; no action is required.

8107020f-2201ffff Sensor TXT ACM Module has transitioned to a less severe state from critical.

Explanation: This message is for the use case when an implementation has detected a Sensor transition to less severe from critical.

May also be shown as 8107020f2201ffff or 0x8107020f2201ffff

Severity: Info

Alert Category: Critical - Other

Serviceable: No

CIM Information: Prefix: PLAT and **ID:** 0523

SNMP Trap ID: 50

Automatically notify Support: No

User response: Information only; no user action required.

8107020f-2582ffff Sensor No I/O Resources has transitioned to a less severe state from critical.

Explanation: This message is for the use case when an implementation has detected a Sensor transition to less severe from critical.

May also be shown as 8107020f2582ffff or 0x8107020f2582ffff

Severity: Info

Alert Category: Critical - Other

Serviceable: No

CIM Information: Prefix: PLAT and **ID:** 0523

SNMP Trap ID: 50

Automatically notify Support: No

User response: This is a UEFI detected event. To find the UEFI diagnostic code for this event, in the information center, follow the instructions in "Finding the UEFI diagnostic code" under "UEFI diagnostic codes." Then, in the information center, open the topic for the UEFI diagnostic code and follow the instructions under "User response."

Related Links:

- “Finding the UEFI diagnostic code” on page 521

81070217-0b05ffff Sensor PCIE 1 Overtemp has transitioned to a less severe state from critical.

Explanation: This message is for the use case when an implementation has detected a Sensor transition to less severe from critical.

May also be shown as 810702170b05ffff or 0x810702170b05ffff

Severity: Info

Alert Category: Critical - Other

Serviceable: No

CIM Information: Prefix: PLAT and **ID:** 0523

SNMP Trap ID: 50

Automatically notify Support: No

User response: Information only; no action is required.

81070217-0b81ffff Sensor PEN FHR Empty has transitioned to a less severe state from critical.

Explanation: This message is for the use case when an implementation has detected a Sensor transition to less severe from critical.

May also be shown as 810702170b81ffff or 0x810702170b81ffff

Severity: Info

Alert Category: Critical - Other

Serviceable: No

CIM Information: Prefix: PLAT and **ID:** 0523

SNMP Trap ID: 50

Automatically notify Support: No

User response: Information only; no user action required.

81070217-0b82ffff Sensor PEN LPR Empty has transitioned to a less severe state from critical.

Explanation: This message is for the use case when an implementation has detected a Sensor transition to less severe from critical.

May also be shown as 810702170b82ffff or 0x810702170b82ffff

Severity: Info

Alert Category: Critical - Other

Serviceable: No

CIM Information: Prefix: PLAT and **ID:** 0523

SNMP Trap ID: 50

Automatically notify Support: No

User response: Information only; no user action required.

81070217-1f02ffff Sensor ETE Fault has transitioned to a less severe state from critical.

Explanation: This message is for the use case when an implementation has detected a Sensor transition to less severe from critical.

May also be shown as 810702171f02ffff or 0x810702171f02ffff

Severity: Info

Alert Category: Critical - Other

Serviceable: No

CIM Information: Prefix: PLAT and **ID:** 0523

SNMP Trap ID: 50

Automatically notify Support: No

User response: Information only; no action is required.

81070217-2c01ffff Sensor Mezz Exp 1 Fault has transitioned to a less severe state from critical.

Explanation: A fault is no longer detected in the I/O expansion adapter in I/O expansion connector 1.

May also be shown as 810702172c01ffff or 0x810702172c01ffff

Severity: Info

Alert Category: Critical - Other

Serviceable: No

CIM Information: Prefix: PLAT and **ID:** 0523

SNMP Trap ID: 50

Automatically notify Support: No

User response: Information only; no action is required.

81070217-2c02ffff Sensor Mezz Exp 2 Fault has transitioned to a less severe state from critical.

Explanation: A fault is no longer detected in the I/O expansion adapter in I/O expansion connector 2.

May also be shown as 810702172c02ffff or 0x810702172c02ffff

Severity: Info

Alert Category: Critical - Other

Serviceable: No

CIM Information: **Prefix:** PLAT and **ID:** 0523

SNMP Trap ID: 50

Automatically notify Support: No

User response: Information only; no action is required.

81070217-2c03ffff Sensor PEN MExp 3 Fault has transitioned to a less severe state from critical.

Explanation: A fault is no longer detected in the PEN Mezzanine Expansion adapter in I/O expansion connector 3.

May also be shown as 810702172c03ffff or 0x810702172c03ffff

Severity: Info

Alert Category: Critical - Other

Serviceable: No

CIM Information: **Prefix:** PLAT and **ID:** 0523

SNMP Trap ID: 50

Automatically notify Support: No

User response: Information only; no action is required.

81070217-2c04ffff Sensor PEN MExp 4 Fault has transitioned to a less severe state from critical.

Explanation: A fault is no longer detected in the PEN Mezzanine Expansion adapter in I/O expansion connector 4.

May also be shown as 810702172c04ffff or 0x810702172c04ffff

Severity: Info

Alert Category: Critical - Other

Serviceable: No

CIM Information: **Prefix:** PLAT and **ID:** 0523

SNMP Trap ID: 50

Automatically notify Support: No

User response: Information only; no action is required.

81070217-3101ffff Sensor PEN Slot1 Empty has transitioned to a less severe state from critical.

Explanation: PCIe adapter slot 1 in the PCI expansion unit is no longer empty.

May also be shown as 810702173101ffff or 0x810702173101ffff

Severity: Info

Alert Category: Critical - Other

Serviceable: No

CIM Information: **Prefix:** PLAT and **ID:** 0523

SNMP Trap ID: 50

Automatically notify Support: No

User response: Information only; no action is required.

81070217-3102ffff Sensor PEN Slot2 has transitioned to a less severe state from critical.

Explanation: PCIe adapter slot 2 in the PCI expansion unit is no longer empty.

May also be shown as 810702173102ffff or 0x810702173102ffff

Severity: Info

Alert Category: Critical - Other

Serviceable: No

CIM Information: Prefix: PLAT and **ID:** 0523

SNMP Trap ID: 50

Automatically notify Support: No

User response: Information only; no action is required.

81070217-3103ffff Sensor PEN Slot3 has transitioned to a less severe state from critical.

Explanation: PCIe adapter slot 3 in the PCI expansion unit is no longer empty.

May also be shown as 810702173103ffff or 0x810702173103ffff

Severity: Info

Alert Category: Critical - Other

Serviceable: No

CIM Information: Prefix: PLAT and **ID:** 0523

SNMP Trap ID: 50

Automatically notify Support: No

User response: Information only; no action is required.

81070217-3104ffff Sensor PEN Slot4 has transitioned to a less severe state from critical.

Explanation: PCIe adapter slot 4 in the PCI expansion unit is no longer empty.

May also be shown as 810702173104ffff or 0x810702173104ffff

Severity: Info

Alert Category: Critical - Other

Serviceable: No

CIM Information: Prefix: PLAT and **ID:** 0523

SNMP Trap ID: 50

Automatically notify Support: No

User response: Information only; no action is required.

81070219-0701ffff Sensor Sys Board Fault has transitioned to a less severe state from critical.

Explanation: This message is for the use case when an implementation has detected a Sensor transition to less severe from critical.

May also be shown as 810702190701ffff or 0x810702190701ffff

Severity: Info

Alert Category: Critical - Other

Serviceable: No

CIM Information: Prefix: PLAT and **ID:** 0523

SNMP Trap ID: 50

Automatically notify Support: No

User response: This is a UEFI detected event. To find the UEFI diagnostic code for this event, in the information center, follow the instructions in "Finding the UEFI diagnostic code" under "UEFI diagnostic codes." Then, in the information center, open the topic for the UEFI diagnostic code and follow the instructions under "User response."

Related Links:

- "Finding the UEFI diagnostic code" on page 521

8107021b-0301ffff Sensor CPU 1 QPILinkErr has transitioned to a less severe state from critical.

Explanation: CPU 1 QPI Link Failure has recovered

May also be shown as 8107021b0301ffff or 0x8107021b0301ffff

Severity: Info

Alert Category: Critical - Other

Serviceable: No

CIM Information: Prefix: PLAT and **ID:** 0523

SNMP Trap ID: 50

Automatically notify Support: No

User response: Information only; no action is required.

8107021b-0302ffff Sensor CPU 2 QPILinkErr has transitioned to a less severe state from critical.

Explanation: This message is for the use case when an implementation has detected a Sensor transition to less severe from critical.

May also be shown as 8107021b0302ffff or 0x8107021b0302ffff

Severity: Info

Alert Category: Critical - Other

Serviceable: No

CIM Information: Prefix: PLAT and **ID:** 0523

SNMP Trap ID: 50

Automatically notify Support: No

User response: Information only; no action is required.

81070301-030101ff Sensor [SensorElementName] has gone from Nonrecoverable state to a less severe state.

Explanation: The previously high temperature of microprocessor 1 has returned to below its specified threshold.

May also be shown as 81070301030101ff or 0x81070301030101ff

Severity: Info

Alert Category: Critical - Temperature

Serviceable: No

CIM Information: Prefix: PLAT and **ID:** 0525

SNMP Trap ID: 0

Automatically notify Support: No

User response: Information only; no action is required.

81070301-0301ffff Sensor CPU 1 Overtemp has deasserted the transition to non-recoverable from a less severe state.

Explanation: This message is for the use case when an implementation has detected that the Sensor transition to non-recoverable from less severe has deasserted.

May also be shown as 810703010301ffff or 0x810703010301ffff

Severity: Info

Alert Category: Critical - Temperature

Serviceable: No

CIM Information: Prefix: PLAT and **ID:** 0525

SNMP Trap ID: 0

Automatically notify Support: No

User response: Information only; no action is required.

81070301-030201ff Sensor [SensorElementName] has gone from Nonrecoverable state to a less severe state.

Explanation: The previously high temperature of microprocessor 2 has returned to below its specified threshold.

May also be shown as 81070301030201ff or 0x81070301030201ff

Severity: Info

Alert Category: Critical - Temperature

Serviceable: No

CIM Information: Prefix: PLAT and **ID:** 0525

SNMP Trap ID: 0

Automatically notify Support: No

User response: Information only; no action is required.

81070301-0302ffff Sensor CPU 2 Overtemp has deasserted the transition to non-recoverable from a less severe state.

Explanation: This message is for the use case when an implementation has detected that the Sensor transition to non-recoverable from less severe has deasserted.

May also be shown as 810703010302ffff or 0x810703010302ffff

Severity: Info

Alert Category: Critical - Temperature

Serviceable: No

CIM Information: Prefix: PLAT and **ID:** 0525

SNMP Trap ID: 0

Automatically notify Support: No

User response: Information only; no action is required.

81070301-2c01ffff Sensor Mezz Exp 1 temp has deasserted the transition to non-recoverable from a less severe state.

Explanation: The previously high temperature of the I/O expansion adapter in I/O expansion connector 1 has returned to below its specified threshold.

May also be shown as 810703012c01ffff or 0x810703012c01ffff

Severity: Info

Alert Category: Critical - Temperature

Serviceable: No

CIM Information: **Prefix:** PLAT and **ID:** 0525

SNMP Trap ID: 0

Automatically notify Support: No

User response: Information only; no action is required.

81070301-2c02ffff Sensor Mezz Exp 2 temp has deasserted the transition to non-recoverable from a less severe state.

Explanation: The previously high temperature of the I/O expansion adapter in I/O expansion connector 2 has returned to below its specified threshold.

May also be shown as 810703012c02ffff or 0x810703012c02ffff

Severity: Info

Alert Category: Critical - Temperature

Serviceable: No

CIM Information: **Prefix:** PLAT and **ID:** 0525

SNMP Trap ID: 0

Automatically notify Support: No

User response: Information only; no action is required.

81070301-2c03ffff Sensor PEN MExp 3 Temp has deasserted the transition to non-recoverable from a less severe state.

Explanation: The previously high temperature of the PEN Mezzanine Expansion adapter in I/O expansion connector 3 has returned to below its specified threshold.

May also be shown as 810703012c03ffff or 0x810703012c03ffff

Severity: Info

Alert Category: Critical - Temperature

Serviceable: No

CIM Information: **Prefix:** PLAT and **ID:** 0525

SNMP Trap ID: 0

Automatically notify Support: No

User response: Information only; no action is required.

81070301-2c04ffff Sensor PEN MExp 4 Temp has deasserted the transition to non-recoverable from a less severe state.

Explanation: The previously high temperature of the PEN Mezzanine Expansion adapter in I/O expansion connector 4 has returned to below its specified threshold.

May also be shown as 810703012c04ffff or 0x810703012c04ffff

Severity: Info

Alert Category: Critical - Temperature

Serviceable: No

CIM Information: **Prefix:** PLAT and **ID:** 0525

SNMP Trap ID: 0

Automatically notify Support: No

User response: Information only; no action is required.

81070301-2d0101ff Sensor PCH Overtemp has deasserted the transition to non-recoverable from a less severe state.

Explanation: The previously high temperature of the PCH has returned to below its specified threshold.

May also be shown as 810703012d0101ff or 0x810703012d0101ff

Severity: Info

Alert Category: Critical - Temperature

Serviceable: No

CIM Information: Prefix: PLAT and **ID:** 0525

SNMP Trap ID: 0

Automatically notify Support: No

User response: Information only; no action is required.

81070301-3101ffff Sensor PCIE 1 Overtemp has deasserted the transition to non-recoverable from a less severe state.

Explanation: This message is for the use case when an implementation has detected that the Sensor transition to non-recoverable from less severe has deasserted.

May also be shown as 810703013101ffff or 0x810703013101ffff

Severity: Info

Alert Category: Critical - Temperature

Serviceable: No

CIM Information: Prefix: PLAT and **ID:** 0525

SNMP Trap ID: 0

Automatically notify Support: No

User response: Information only; no action is required.

81070301-3102ffff Sensor PCIE 2 Overtemp has deasserted the transition to non-recoverable from a less severe state.

Explanation: This message is for the use case when an implementation has detected that the Sensor transition to non-recoverable from less severe has deasserted.

May also be shown as 810703013102ffff or 0x810703013102ffff

Severity: Info

Alert Category: Critical - Temperature

Serviceable: No

CIM Information: Prefix: PLAT and **ID:** 0525

SNMP Trap ID: 0

Automatically notify Support: No

User response: Information only; no action is required.

81070301-3103ffff Sensor PCIE 3 Overtemp has deasserted the transition to non-recoverable from a less severe state.

Explanation: This message is for the use case when an implementation has detected that the Sensor transition to non-recoverable from less severe has deasserted.

May also be shown as 810703013103ffff or 0x810703013103ffff

Severity: Info

Alert Category: Critical - Temperature

Serviceable: No

CIM Information: Prefix: PLAT and **ID:** 0525

SNMP Trap ID: 0

Automatically notify Support: No

User response: Information only; no action is required.

81070301-3104ffff Sensor PCIE 4 Overtemp has deasserted the transition to non-recoverable from a less severe state.

Explanation: This message is for the use case when an implementation has detected that the Sensor transition to non-recoverable from less severe has deasserted.

May also be shown as 810703013104ffff or 0x810703013104ffff

Severity: Info

Alert Category: Critical - Temperature

Serviceable: No

CIM Information: Prefix: PLAT and **ID:** 0525

SNMP Trap ID: 0

Automatically notify Support: No

User response: Information only; no action is required.

81070301-3702ffff Sensor PEN Inlet Over T has deasserted the transition to non-recoverable from a less severe state.

Explanation: This message is for the use case when an implementation has detected that the Sensor transition to non-recoverable from less severe has deasserted.

May also be shown as 810703013702ffff or 0x810703013702ffff

Severity: Info

Alert Category: Critical - Temperature

Serviceable: No

CIM Information: Prefix: PLAT and **ID:** 0525

SNMP Trap ID: 0

Automatically notify Support: No

User response: Information only; no action is required.

81070601-2c01ffff Sensor Mezz Exp 1 temp has deasserted the transition to non-recoverable.

Explanation: The previously high Mezzanine Expansion card temperature has returned below its specified threshold.

May also be shown as 810706012c01ffff or 0x810706012c01ffff

Severity: Info

Alert Category: Critical - Temperature

Serviceable: No

CIM Information: **Prefix:** PLAT and **ID:** 0531

SNMP Trap ID: 0

Automatically notify Support: No

User response: Information only; no action is required.

81070601-2c02ffff Sensor Mezz Exp 2 temp has deasserted the transition to non-recoverable.

Explanation: The previously high Mezzanine Expansion card temperature has returned below its specified threshold.

May also be shown as 810706012c02ffff or 0x810706012c02ffff

Severity: Info

Alert Category: Critical - Temperature

Serviceable: No

CIM Information: **Prefix:** PLAT and **ID:** 0531

SNMP Trap ID: 0

Automatically notify Support: No

User response: Information only; no action is required.

81070601-2c03ffff Sensor PEN MExp 3 temp has deasserted the transition to non-recoverable.

Explanation: The previously high PEN Mezzanine Expansion card temperature has returned below its specified threshold.

May also be shown as 810706012c03ffff or 0x810706012c03ffff

Severity: Info

Alert Category: Critical - Temperature

Serviceable: No

CIM Information: **Prefix:** PLAT and **ID:** 0531

SNMP Trap ID: 0

Automatically notify Support: No

User response: Information only; no action is required.

81070601-2c04ffff Sensor PEN MExp 4 temp has deasserted the transition to non-recoverable.

Explanation: The previously high PEN Mezzanine Expansion card temperature has returned below its specified threshold.

May also be shown as 810706012c04ffff or 0x810706012c04ffff

Severity: Info

Alert Category: Critical - Temperature

Serviceable: No

CIM Information: **Prefix:** PLAT and **ID:** 0531

SNMP Trap ID: 0

Automatically notify Support: No

User response: Information only; no action is required.

8107060f-2201ffff Sensor BOFM Config Err has deasserted the transition to non-recoverable.

Explanation: This message is for the use case when an implementation has detected that the Sensor transition to non-recoverable has deasserted.

May also be shown as 8107060f2201ffff or 0x8107060f2201ffff

Severity: Info

Alert Category: Critical - Other

Serviceable: No

CIM Information: Prefix: PLAT and **ID:** 0531

SNMP Trap ID: 50

Automatically notify Support: No

User response: Information only; no user action required.

81080017-0f01ffff Device SAS BP has been added.

Explanation: The SAS backplane has been installed.

May also be shown as 810800170f01ffff or 0x810800170f01ffff

Severity: Info

Alert Category: System - Other

Serviceable: No

CIM Information: Prefix: PLAT and **ID:** 0536

SNMP Trap ID:

Automatically notify Support: No

User response: Information only; no action is required.

81090112-2101ffff Device [LogicalDeviceElementName] has been disabled.

Explanation: An IPMI or SNMP Account has been disabled.

May also be shown as 810901122101ffff or 0x810901122101ffff

Severity: Info

Alert Category: System - Other

Serviceable: No

CIM Information: Prefix: PLAT and **ID:** 0539

SNMP Trap ID:

Automatically notify Support: No

User response: Information only; no action required.

810b010c-2581ffff Redundancy Lost for Backup Memory has deasserted.

Explanation: This message is for the use case when Redundancy Lost has deasserted.

May also be shown as 810b010c2581ffff or 0x810b010c2581ffff

Severity: Info

Alert Category: Critical - Memory

Serviceable: No

CIM Information: Prefix: PLAT and **ID:** 0803

SNMP Trap ID: 41

Automatically notify Support: No

User response: This is a UEFI detected event. To find the UEFI diagnostic code for this event, in the information center, follow the instructions in "Finding the UEFI diagnostic code" under "UEFI diagnostic codes." Then, in the information center, open the topic for the UEFI diagnostic code and follow the instructions under "User response."

Related Links:

- "Finding the UEFI diagnostic code" on page 521

810b030c-2581ffff Non-redundant:Sufficient Resources from Redundancy Degraded or Fully Redundant for Backup Memory has deasserted.

Explanation: This message is for the use case when a Redundancy Set has transitioned from Non-redundant:Sufficient Resources.

May also be shown as 810b030c2581ffff or 0x810b030c2581ffff

Severity: Info

Alert Category: Warning - Memory

Serviceable: No

CIM Information: Prefix: PLAT and **ID:** 0807

SNMP Trap ID: 43

Automatically notify Support: No

User response: This is a UEFI detected event. To find the UEFI diagnostic code for this event, in the information center, follow the instructions in "Finding the UEFI diagnostic code" under "UEFI diagnostic codes." Then, in the information center, open the topic for the UEFI diagnostic code and follow the instructions under "User response."

Related Links:

- "Finding the UEFI diagnostic code" on page 521

810b050c-2581ffff Non-redundant:Insufficient Resources for Backup Memory has deasserted.

Explanation: This message is for the use case when a Redundancy Set has transitioned from Non-redundant:Insufficient Resources.

May also be shown as 810b050c2581ffff or 0x810b050c2581ffff

Severity: Info

Alert Category: Critical - Memory

Serviceable: No

CIM Information: Prefix: PLAT and **ID:** 0811

SNMP Trap ID: 41

Automatically notify Support: No

User response: This is a UEFI detected event. To find the UEFI diagnostic code for this event, in the information center, follow the instructions in "Finding the UEFI diagnostic code" under "UEFI diagnostic codes." Then, in the information center, open the topic for the UEFI diagnostic code and follow the instructions under "User response."

Related Links:

- "Finding the UEFI diagnostic code" on page 521

816f0007-0301ffff CPU 1 has Recovered from IERR.

Explanation: This message is for the use case when an implementation has detected a Processor Recovered - IERR Condition.

May also be shown as 816f00070301ffff or 0x816f00070301ffff

Severity: Info

Alert Category: Critical - CPU

Serviceable: No

CIM Information: Prefix: PLAT and **ID:** 0043

SNMP Trap ID: 40

Automatically notify Support: No

User response: This is a UEFI detected event. To find the UEFI diagnostic code for this event, in the information center, follow the instructions in "Finding the UEFI diagnostic code" under "UEFI diagnostic codes." Then, in the information center, open the topic for the UEFI diagnostic code and follow the instructions under "User response."

Related Links:

- "Finding the UEFI diagnostic code" on page 521

816f0007-0302ffff CPU 2 has Recovered from IERR.

Explanation: This message is for the use case when an implementation has detected a Processor Recovered - IERR Condition.

May also be shown as 816f00070302ffff or 0x816f00070302ffff

Severity: Info

Alert Category: Critical - CPU

Serviceable: No

CIM Information: Prefix: PLAT and **ID:** 0043

SNMP Trap ID: 40

Automatically notify Support: No

User response: This is a UEFI detected event. To find the UEFI diagnostic code for this event, in the information center, follow the instructions in "Finding the UEFI diagnostic code" under "UEFI diagnostic codes." Then, in the information center, open the topic for the UEFI diagnostic code and follow the instructions under "User response."

Related Links:

- "Finding the UEFI diagnostic code" on page 521

816f0007-2584ffff [ProcessorElementName] has Recovered from IERR.

Explanation: This message is for the use case when an implementation has detected a Processor Recovered - IERR Condition. (It might be All CPUs or One of CPUs as well)

May also be shown as 816f00072584ffff or 0x816f00072584ffff

Severity: Info

Alert Category: Critical - CPU

Serviceable: No

CIM Information: Prefix: PLAT and **ID:** 0043

SNMP Trap ID: 40

Automatically notify Support: No

User response: This is a UEFI detected event. To find the UEFI diagnostic code for this event, in the information

center, follow the instructions in "Finding the UEFI diagnostic code" under "UEFI diagnostic codes." Then, in the information center, open the topic for the UEFI diagnostic code and follow the instructions under "User response."

Related Links:

- "Finding the UEFI diagnostic code" on page 521

816f0009-0701ffff system board 1 has been turned on.

Explanation: The compute node has been powered on.

May also be shown as 816f00090701ffff or 0x816f00090701ffff

Severity: Info

Alert Category: System - Power On

Serviceable: No

CIM Information: Prefix: PLAT and **ID:** 0107

SNMP Trap ID: 24

Automatically notify Support: No

User response: Information only; no action is required.

816f000d-0400ffff The Drive Drive 0 has been removed from unit Drive 0.

Explanation: Hard disk drive 0 is no longer detected. If there is no drive in the drive bay, a filler is required.

May also be shown as 816f000d0400ffff or 0x816f000d0400ffff

Severity: Info

Alert Category: Critical - Hard Disk drive

Serviceable: No

CIM Information: Prefix: PLAT and **ID:** 0163

SNMP Trap ID: 5

Automatically notify Support: No

User response: Complete the following steps until the problem is solved:

1. If drive was intentionally removed, make sure that there is a filler in the drive bay.
2. Make sure that the drive is correctly seated.
3. If drive is correctly seated, replace the drive.

Related Links:

- "Removing a hot-swap hard disk drive" on page 601
- "Installing a hot-swap hard disk drive" on page 602

816f000d-0401ffff The Drive Drive 1 has been removed from unit Drive 1.

Explanation: Hard disk drive 1 is no longer detected. If there is no drive in the drive bay, a filler is required.

May also be shown as 816f000d0401ffff or 0x816f000d0401ffff

Severity: Info

Alert Category: Critical - Hard Disk drive

Serviceable: No

CIM Information: Prefix: PLAT and **ID:** 0163

SNMP Trap ID: 5

Automatically notify Support: No

User response: Complete the following steps until the problem is solved:

1. If drive was intentionally removed, make sure that there is a filler in the drive bay.
2. Make sure that the drive is correctly seated.
3. If drive is correctly seated, replace the drive.

Related Links:

- "Removing a hot-swap hard disk drive" on page 601
- "Installing a hot-swap hard disk drive" on page 602

816f000d-0402ffff The Drive Drive 2 has been removed from unit Drive 2.

Explanation: Hard disk drive 2 is no longer detected. If there is no drive in the drive bay, a filler is required.

May also be shown as 816f000d0402ffff or 0x816f000d0402ffff

Severity: Info

Alert Category: Critical - Hard Disk drive

Serviceable: No

CIM Information: Prefix: PLAT and **ID:** 0163

SNMP Trap ID: 5

Automatically notify Support: No

User response: Complete the following steps until the problem is solved:

1. If drive was intentionally removed, make sure that there is a filler in the drive bay.
2. Make sure that the drive is correctly seated.
3. If drive is correctly seated, replace the drive.

Related Links:

- "Removing a hot-swap hard disk drive" on page 601
- "Installing a hot-swap hard disk drive" on page 602

816f000d-0403ffff The Drive Drive 3 has been removed from unit Drive 3.

Explanation: Hard disk drive 3 is no longer detected. If there is no drive in the drive bay, a filler is required.

May also be shown as 816f000d0403ffff or 0x816f000d0403ffff

Severity: Info

Alert Category: Critical - Hard Disk drive

Serviceable: No

CIM Information: Prefix: PLAT and **ID:** 0163

SNMP Trap ID: 5

Automatically notify Support: No

User response: Complete the following steps until the problem is solved:

1. If drive was intentionally removed, make sure that there is a filler in the drive bay.
2. Make sure that the drive is correctly seated.
3. If drive is correctly seated, replace the drive.

Related Links:

- "Removing a hot-swap hard disk drive" on page 601
- "Installing a hot-swap hard disk drive" on page 602

816f000d-0404ffff The Drive Drive 4 has been removed from unit Drive 4.

Explanation: Hard disk drive 4 is no longer detected. If there is no drive in the drive bay, a filler is required.

May also be shown as 816f000d0404ffff or 0x816f000d0404ffff

Severity: Info

Alert Category: Critical - Hard Disk drive

Serviceable: No

CIM Information: Prefix: PLAT and **ID:** 0163

SNMP Trap ID: 5

Automatically notify Support: No

User response: Complete the following steps until the problem is solved:

1. If drive was intentionally removed, make sure that there is a filler in the drive bay.
2. Make sure that the drive is correctly seated.
3. If drive is correctly seated, replace the drive.

Related Links:

- "Removing a hot-swap hard disk drive" on page 601
- "Installing a hot-swap hard disk drive" on page 602

816f000d-0405ffff The Drive Drive 5 has been removed from unit Drive 5.

Explanation: Hard disk drive 5 is no longer detected. If there is no drive in the drive bay, a filler is required.

May also be shown as 816f000d0405ffff or 0x816f000d0405ffff

Severity: Info

Alert Category: Critical - Hard Disk drive

Serviceable: No

CIM Information: Prefix: PLAT and **ID:** 0163

SNMP Trap ID: 5

Automatically notify Support: No

User response: Complete the following steps until the problem is solved:

1. If drive was intentionally removed, make sure that there is a filler in the drive bay.
2. Make sure that the drive is correctly seated.
3. If drive is correctly seated, replace the drive.

Related Links:

- "Removing a hot-swap hard disk drive" on page 601
- "Installing a hot-swap hard disk drive" on page 602

816f000d-0406ffff The Drive Drive 6 has been removed from unit Drive 6.

Explanation: Hard disk drive 6 is no longer detected. If there is no drive in the drive bay, a filler is required.

May also be shown as 816f000d0406ffff or 0x816f000d0406ffff

Severity: Info

Alert Category: Critical - Hard Disk drive

Serviceable: No

CIM Information: Prefix: PLAT and **ID:** 0163

SNMP Trap ID: 5

Automatically notify Support: No

User response: Complete the following steps until the problem is solved:

1. If drive was intentionally removed, make sure that there is a filler in the drive bay.
2. Make sure that the drive is correctly seated.
3. If drive is correctly seated, replace the drive.

Related Links:

- "Removing a hot-swap hard disk drive" on page 601
- "Installing a hot-swap hard disk drive" on page 602

816f000d-0407ffff The Drive Drive 7 has been removed from unit Drive 7.

Explanation: Hard disk drive 7 is no longer detected. If there is no drive in the drive bay, a filler is required.

May also be shown as 816f000d0407ffff or 0x816f000d0407ffff

Severity: Info

Alert Category: Critical - Hard Disk drive

Serviceable: No

CIM Information: Prefix: PLAT and **ID:** 0163

SNMP Trap ID: 5

Automatically notify Support: No

User response: Complete the following steps until the problem is solved:

1. If drive was intentionally removed, make sure that there is a filler in the drive bay.
2. Make sure that the drive is correctly seated.
3. If drive is correctly seated, replace the drive.

Related Links:

- "Removing a hot-swap hard disk drive" on page 601
- "Installing a hot-swap hard disk drive" on page 602

816f000f-2201ffff The System [ComputerSystemElementName] has detected a POST Error deassertion.

Explanation: This message is for the use case when an implementation has detected that Post Error has deasserted. ABR Status. Firmware Error.

May also be shown as 816f000f2201ffff or 0x816f000f2201ffff

Severity: Info

Alert Category: Critical - Other

Serviceable: No

CIM Information: Prefix: PLAT and **ID:** 0185

SNMP Trap ID: 50

Automatically notify Support: No

User response: This is a UEFI detected event. To find the UEFI diagnostic code for this event, in the information center, follow the instructions in "Finding the UEFI diagnostic code" under "UEFI diagnostic codes." Then, in the information center, open the topic for the UEFI diagnostic code and follow the instructions under "User response."

Related Links:

- "Finding the UEFI diagnostic code" on page 521

816f0013-1701ffff System NMI has recovered from a diagnostic interrupt.

Explanation: The compute node has recovered from a front panel NMI diagnostic interrupt.

May also be shown as 816f00131701ffff or 0x816f00131701ffff

Severity: Info

Alert Category: Critical - Other

Serviceable: No

CIM Information: Prefix: PLAT and **ID:** 0223

SNMP Trap ID: 50

Automatically notify Support: No

User response: Information only; no action is required.

816f0021-22010901 Fault condition removed on slot [PhysicalConnectorElementName] on system [ComputerSystemElementName].

Explanation: This message is for the use case when an implementation has detected a Fault condition in a slot has been removed. No Op ROM Space.

May also be shown as 816f002122010901 or 0x816f002122010901

Severity: Info

Alert Category: Critical - Other

Serviceable: No

CIM Information: Prefix: PLAT and **ID:** 0331

SNMP Trap ID: 50

Automatically notify Support: No

User response: This is a UEFI detected event. To find the UEFI diagnostic code for this event, in the information center, follow the instructions in "Finding the UEFI diagnostic code" under "UEFI diagnostic codes." Then, in the information center, open the topic for the UEFI diagnostic code and follow the instructions under "User response."

Related Links:

- “Finding the UEFI diagnostic code” on page 521

816f0021-22010902 Fault condition removed on slot [PhysicalConnectorElementName] on system [ComputerSystemElementName].

Explanation: This message is for the use case when an implementation has detected a Fault condition in a slot has been removed. No Op ROM Space.

May also be shown as 816f002122010902 or 0x816f002122010902

Severity: Info

Alert Category: Critical - Other

Serviceable: No

CIM Information: Prefix: PLAT and **ID:** 0331

SNMP Trap ID: 50

Automatically notify Support: No

User response: This is a UEFI detected event. To find the UEFI diagnostic code for this event, in the information center, follow the instructions in "Finding the UEFI diagnostic code" under "UEFI diagnostic codes." Then, in the information center, open the topic for the UEFI diagnostic code and follow the instructions under "User response."

Related Links:

- “Finding the UEFI diagnostic code” on page 521

816f0021-22010903 Fault condition removed on slot [PhysicalConnectorElementName] on system [ComputerSystemElementName].

Explanation: This message is for the use case when an implementation has detected a Fault condition in a slot has been removed. No Op ROM Space.

May also be shown as 816f002122010903 or 0x816f002122010903

Severity: Info

Alert Category: Critical - Other

Serviceable: No

CIM Information: Prefix: PLAT and **ID:** 0331

SNMP Trap ID: 50

Automatically notify Support: No

User response: This is a UEFI detected event. To find the UEFI diagnostic code for this event, in the information center, follow the instructions in "Finding the UEFI diagnostic code" under "UEFI diagnostic codes." Then, in the information center, open the topic for the UEFI diagnostic code and follow the instructions under "User response."

Related Links:

- “Finding the UEFI diagnostic code” on page 521

816f0021-22010904 Fault condition removed on slot [PhysicalConnectorElementName] on system [ComputerSystemElementName].

Explanation: This message is for the use case when an implementation has detected a Fault condition in a slot has been removed. No Op ROM Space.

May also be shown as 816f002122010904 or 0x816f002122010904

Severity: Info

Alert Category: Critical - Other

Serviceable: No

CIM Information: Prefix: PLAT and **ID:** 0331

SNMP Trap ID: 50

Automatically notify Support: No

User response: This is a UEFI detected event. To find the UEFI diagnostic code for this event, in the information center, follow the instructions in "Finding the UEFI diagnostic code" under "UEFI diagnostic codes." Then, in the information center, open the topic for the UEFI diagnostic code and follow the instructions under "User response."

Related Links:

- “Finding the UEFI diagnostic code” on page 521

816f0021-2582ffff Fault condition removed on slot [PhysicalConnectorElementName] on system [ComputerSystemElementName].

Explanation: This message is for the use case when an implementation has detected a Fault condition in a slot has been removed. All PCI Error. One of PCI Error.

May also be shown as 816f00212582ffff or 0x816f00212582ffff

Severity: Info

Alert Category: Critical - Other

Serviceable: No

CIM Information: Prefix: PLAT and **ID:** 0331

SNMP Trap ID: 50

Automatically notify Support: No

User response: This is a UEFI detected event. To find the UEFI diagnostic code for this event, in the information center, follow the instructions in "Finding the UEFI diagnostic code" under "UEFI diagnostic codes." Then, in the information center, open the topic for the UEFI diagnostic code and follow the instructions under "User response."

Related Links:

• “Finding the UEFI diagnostic code” on page 521

816f0028-2101ffff Sensor TPM Cmd Failures has returned to normal on management system [ComputerSystemElementName].

Explanation: The Trusted Platform Module card was initialized and started successfully.

May also be shown as 816f00282101ffff or 0x816f00282101ffff

Severity: Info

Alert Category: Warning - Other

Serviceable: No

CIM Information: Prefix: PLAT and **ID:** 0399

SNMP Trap ID: 60

Automatically notify Support: No

User response: Information only; no action is required.

816f0107-0301ffff An over-temperature condition on CPU 1 no longer exists.

Explanation: The previously high temperature of microprocessor 1 has returned to below the critical level.

May also be shown as 816f01070301ffff or 0x816f01070301ffff

Severity: Info

Alert Category: Critical - Temperature

Serviceable: No

CIM Information: Prefix: PLAT and **ID:** 0037

SNMP Trap ID: 0

Automatically notify Support: No

User response: Information only; no action is required.

816f0107-0302ffff An over-temperature condition on [ProcessorElementName] no longer exists.

Explanation: The previously high temperature of microprocessor 2 has returned to below the critical level.

May also be shown as 816f01070302ffff or 0x816f01070302ffff

Severity: Info

Alert Category: Critical - Temperature

Serviceable: No

CIM Information: Prefix: PLAT and **ID:** 0037

SNMP Trap ID: 0

Automatically notify Support: No

User response: Information only; no action is required.

816f0107-2584ffff An over-temperature condition on [ProcessorElementName] no longer exists.

Explanation: The previously high temperature of the specified microprocessor has returned to below its specified threshold.

May also be shown as 816f01072584ffff or 0x816f01072584ffff

Severity: Info

Alert Category: Critical - Temperature

Serviceable: No

CIM Information: Prefix: PLAT and **ID:** 0037

SNMP Trap ID: 0

Automatically notify Support: No

User response: Information only; no action required.

816f010c-2001ffff Uncorrectable error recovery detected for DIMM 1 on Subsystem [MemoryElementName].

Explanation: This message is for the use case when an implementation has detected a Memory uncorrectable error recovery.

May also be shown as 816f010c2001ffff or 0x816f010c2001ffff

Severity: Info

Alert Category: Critical - Memory

Serviceable: No

CIM Information: Prefix: PLAT and **ID:** 0139

SNMP Trap ID: 41

Automatically notify Support: No

User response: This is a UEFI detected event. To find the UEFI diagnostic code for this event, in the information center, follow the instructions in "Finding the UEFI diagnostic code" under "UEFI diagnostic codes." Then, in the information center, open the topic for the UEFI diagnostic code and follow the instructions under "User response."

Related Links:

- “Finding the UEFI diagnostic code” on page 521

816f010c-2002ffff Uncorrectable error recovery detected for DIMM 2 on Subsystem [MemoryElementName].

Explanation: This message is for the use case when an implementation has detected a Memory uncorrectable error recovery.

May also be shown as 816f010c2002ffff or 0x816f010c2002ffff

Severity: Info

Alert Category: Critical - Memory

Serviceable: No

CIM Information: Prefix: PLAT and **ID:** 0139

SNMP Trap ID: 41

Automatically notify Support: No

User response: This is a UEFI detected event. To find the UEFI diagnostic code for this event, in the information center, follow the instructions in "Finding the UEFI diagnostic code" under "UEFI diagnostic codes." Then, in the information center, open the topic for the UEFI diagnostic code and follow the instructions under "User response."

Related Links:

- “Finding the UEFI diagnostic code” on page 521

816f010c-2003ffff Uncorrectable error recovery detected for DIMM 3 on Subsystem [MemoryElementName].

Explanation: This message is for the use case when an implementation has detected a Memory uncorrectable error recovery.

May also be shown as 816f010c2003ffff or 0x816f010c2003ffff

Severity: Info

Alert Category: Critical - Memory

Serviceable: No

CIM Information: Prefix: PLAT and **ID:** 0139

SNMP Trap ID: 41

Automatically notify Support: No

User response: This is a UEFI detected event. To find the UEFI diagnostic code for this event, in the information center, follow the instructions in "Finding the UEFI diagnostic code" under "UEFI diagnostic codes." Then, in the information center, open the topic for the UEFI diagnostic code and follow the instructions under "User response."

Related Links:

- "Finding the UEFI diagnostic code" on page 521

816f010c-2004ffff Uncorrectable error recovery detected for DIMM 4 on Subsystem [MemoryElementName].

Explanation: This message is for the use case when an implementation has detected a Memory uncorrectable error recovery.

May also be shown as 816f010c2004ffff or 0x816f010c2004ffff

Severity: Info

Alert Category: Critical - Memory

Serviceable: No

CIM Information: Prefix: PLAT and **ID:** 0139

SNMP Trap ID: 41

Automatically notify Support: No

User response: This is a UEFI detected event. To find the UEFI diagnostic code for this event, in the information center, follow the instructions in "Finding the UEFI diagnostic code" under "UEFI diagnostic codes." Then, in the information center, open the topic for the UEFI diagnostic code and follow the instructions under "User response."

Related Links:

- "Finding the UEFI diagnostic code" on page 521

816f010c-2005ffff Uncorrectable error recovery detected for DIMM 5 on Subsystem [MemoryElementName].

Explanation: This message is for the use case when an implementation has detected a Memory uncorrectable error recovery.

May also be shown as 816f010c2005ffff or 0x816f010c2005ffff

Severity: Info

Alert Category: Critical - Memory

Serviceable: No

CIM Information: Prefix: PLAT and **ID:** 0139

SNMP Trap ID: 41

Automatically notify Support: No

User response: This is a UEFI detected event. To find the UEFI diagnostic code for this event, in the information

center, follow the instructions in "Finding the UEFI diagnostic code" under "UEFI diagnostic codes." Then, in the information center, open the topic for the UEFI diagnostic code and follow the instructions under "User response."

Related Links:

- "Finding the UEFI diagnostic code" on page 521

816f010c-2006ffff Uncorrectable error recovery detected for DIMM 6 on Subsystem [MemoryElementName].

Explanation: This message is for the use case when an implementation has detected a Memory uncorrectable error recovery.

May also be shown as 816f010c2006ffff or 0x816f010c2006ffff

Severity: Info

Alert Category: Critical - Memory

Serviceable: No

CIM Information: Prefix: PLAT and **ID:** 0139

SNMP Trap ID: 41

Automatically notify Support: No

User response: This is a UEFI detected event. To find the UEFI diagnostic code for this event, in the information center, follow the instructions in "Finding the UEFI diagnostic code" under "UEFI diagnostic codes." Then, in the information center, open the topic for the UEFI diagnostic code and follow the instructions under "User response."

Related Links:

- "Finding the UEFI diagnostic code" on page 521

816f010c-2007ffff Uncorrectable error recovery detected for DIMM 7 on Subsystem [MemoryElementName].

Explanation: This message is for the use case when an implementation has detected a Memory uncorrectable error recovery.

May also be shown as 816f010c2007ffff or 0x816f010c2007ffff

Severity: Info

Alert Category: Critical - Memory

Serviceable: No

CIM Information: Prefix: PLAT and **ID:** 0139

SNMP Trap ID: 41

Automatically notify Support: No

User response: This is a UEFI detected event. To find the UEFI diagnostic code for this event, in the information center, follow the instructions in "Finding the UEFI diagnostic code" under "UEFI diagnostic codes." Then, in the information center, open the topic for the UEFI diagnostic code and follow the instructions under "User response."

Related Links:

- "Finding the UEFI diagnostic code" on page 521

816f010c-2008ffff Uncorrectable error recovery detected for DIMM 8 on Subsystem [MemoryElementName].

Explanation: This message is for the use case when an implementation has detected a Memory uncorrectable error recovery.

May also be shown as 816f010c2008ffff or 0x816f010c2008ffff

Severity: Info

Alert Category: Critical - Memory

Serviceable: No

CIM Information: **Prefix:** PLAT and **ID:** 0139

SNMP Trap ID: 41

Automatically notify Support: No

User response: This is a UEFI detected event. To find the UEFI diagnostic code for this event, in the information center, follow the instructions in "Finding the UEFI diagnostic code" under "UEFI diagnostic codes." Then, in the information center, open the topic for the UEFI diagnostic code and follow the instructions under "User response."

Related Links:

- “Finding the UEFI diagnostic code” on page 521

816f010c-2009ffff Uncorrectable error recovery detected for DIMM 9 on Subsystem [MemoryElementName].

Explanation: This message is for the use case when an implementation has detected a Memory uncorrectable error recovery.

May also be shown as 816f010c2009ffff or 0x816f010c2009ffff

Severity: Info

Alert Category: Critical - Memory

Serviceable: No

CIM Information: **Prefix:** PLAT and **ID:** 0139

SNMP Trap ID: 41

Automatically notify Support: No

User response: This is a UEFI detected event. To find the UEFI diagnostic code for this event, in the information center, follow the instructions in "Finding the UEFI diagnostic code" under "UEFI diagnostic codes." Then, in the information center, open the topic for the UEFI diagnostic code and follow the instructions under "User response."

Related Links:

- “Finding the UEFI diagnostic code” on page 521

816f010c-200affff Uncorrectable error recovery detected for DIMM 10 on Subsystem [MemoryElementName].

Explanation: This message is for the use case when an implementation has detected a Memory uncorrectable error recovery.

May also be shown as 816f010c200affff or 0x816f010c200affff

Severity: Info

Alert Category: Critical - Memory

Serviceable: No

CIM Information: **Prefix:** PLAT and **ID:** 0139

SNMP Trap ID: 41

Automatically notify Support: No

User response: This is a UEFI detected event. To find the UEFI diagnostic code for this event, in the information center, follow the instructions in "Finding the UEFI diagnostic code" under "UEFI diagnostic codes." Then, in the information center, open the topic for the UEFI diagnostic code and follow the instructions under "User response."

Related Links:

- “Finding the UEFI diagnostic code” on page 521

816f010c-200bffff Uncorrectable error recovery detected for DIMM 11 on Subsystem [MemoryElementName].

Explanation: This message is for the use case when an implementation has detected a Memory uncorrectable error recovery.

May also be shown as 816f010c200bffff or 0x816f010c200bffff

Severity: Info

Alert Category: Critical - Memory

Serviceable: No

CIM Information: Prefix: PLAT and **ID:** 0139

SNMP Trap ID: 41

Automatically notify Support: No

User response: This is a UEFI detected event. To find the UEFI diagnostic code for this event, in the information center, follow the instructions in "Finding the UEFI diagnostic code" under "UEFI diagnostic codes." Then, in the information center, open the topic for the UEFI diagnostic code and follow the instructions under "User response."

Related Links:

- “Finding the UEFI diagnostic code” on page 521

816f010c-200cffff Uncorrectable error recovery detected for DIMM 12 on Subsystem [MemoryElementName].

Explanation: This message is for the use case when an implementation has detected a Memory uncorrectable error recovery.

May also be shown as 816f010c200cffff or 0x816f010c200cffff

Severity: Info

Alert Category: Critical - Memory

Serviceable: No

CIM Information: Prefix: PLAT and **ID:** 0139

SNMP Trap ID: 41

Automatically notify Support: No

User response: This is a UEFI detected event. To find the UEFI diagnostic code for this event, in the information center, follow the instructions in "Finding the UEFI diagnostic code" under "UEFI diagnostic codes." Then, in the information center, open the topic for the UEFI diagnostic code and follow the instructions under "User response."

Related Links:

- “Finding the UEFI diagnostic code” on page 521

816f010c-200dffff Uncorrectable error recovery detected for DIMM 13 on Subsystem [MemoryElementName].

Explanation: This message is for the use case when an implementation has detected a Memory uncorrectable error recovery.

May also be shown as 816f010c200dffff or 0x816f010c200dffff

Severity: Info

Alert Category: Critical - Memory

Serviceable: No

CIM Information: Prefix: PLAT and **ID:** 0139

SNMP Trap ID: 41

Automatically notify Support: No

User response: This is a UEFI detected event. To find the UEFI diagnostic code for this event, in the information

center, follow the instructions in "Finding the UEFI diagnostic code" under "UEFI diagnostic codes." Then, in the information center, open the topic for the UEFI diagnostic code and follow the instructions under "User response."

Related Links:

- "Finding the UEFI diagnostic code" on page 521

816f010c-200effff Uncorrectable error recovery detected for DIMM 14 on Subsystem [MemoryElementName].

Explanation: This message is for the use case when an implementation has detected a Memory uncorrectable error recovery.

May also be shown as 816f010c200effff or 0x816f010c200effff

Severity: Info

Alert Category: Critical - Memory

Serviceable: No

CIM Information: Prefix: PLAT and **ID:** 0139

SNMP Trap ID: 41

Automatically notify Support: No

User response: This is a UEFI detected event. To find the UEFI diagnostic code for this event, in the information center, follow the instructions in "Finding the UEFI diagnostic code" under "UEFI diagnostic codes." Then, in the information center, open the topic for the UEFI diagnostic code and follow the instructions under "User response."

Related Links:

- "Finding the UEFI diagnostic code" on page 521

816f010c-200fffff Uncorrectable error recovery detected for DIMM 15 on Subsystem [MemoryElementName].

Explanation: This message is for the use case when an implementation has detected a Memory uncorrectable error recovery.

May also be shown as 816f010c200fffff or 0x816f010c200fffff

Severity: Info

Alert Category: Critical - Memory

Serviceable: No

CIM Information: Prefix: PLAT and **ID:** 0139

SNMP Trap ID: 41

Automatically notify Support: No

User response: This is a UEFI detected event. To find the UEFI diagnostic code for this event, in the information center, follow the instructions in "Finding the UEFI diagnostic code" under "UEFI diagnostic codes." Then, in the information center, open the topic for the UEFI diagnostic code and follow the instructions under "User response."

Related Links:

- "Finding the UEFI diagnostic code" on page 521

816f010c-2010ffff Uncorrectable error recovery detected for DIMM 16 on Subsystem [MemoryElementName].

Explanation: This message is for the use case when an implementation has detected a Memory uncorrectable error recovery.

May also be shown as 816f010c2010ffff or 0x816f010c2010ffff

Severity: Info

Alert Category: Critical - Memory

Serviceable: No

CIM Information: **Prefix:** PLAT and **ID:** 0139

SNMP Trap ID: 41

Automatically notify Support: No

User response: This is a UEFI detected event. To find the UEFI diagnostic code for this event, in the information center, follow the instructions in "Finding the UEFI diagnostic code" under "UEFI diagnostic codes." Then, in the information center, open the topic for the UEFI diagnostic code and follow the instructions under "User response."

Related Links:

- "Finding the UEFI diagnostic code" on page 521

816f010c-2011ffff Uncorrectable error recovery detected for DIMM 17 on Subsystem [MemoryElementName].

Explanation: This message is for the use case when an implementation has detected a Memory uncorrectable error recovery.

May also be shown as 816f010c2011ffff or 0x816f010c2011ffff

Severity: Info

Alert Category: Critical - Memory

Serviceable: No

CIM Information: **Prefix:** PLAT and **ID:** 0139

SNMP Trap ID: 41

Automatically notify Support: No

User response: This is a UEFI detected event. To find the UEFI diagnostic code for this event, in the information center, follow the instructions in "Finding the UEFI diagnostic code" under "UEFI diagnostic codes." Then, in the information center, open the topic for the UEFI diagnostic code and follow the instructions under "User response."

Related Links:

- "Finding the UEFI diagnostic code" on page 521

816f010c-2012ffff Uncorrectable error recovery detected for DIMM 18 on Subsystem [MemoryElementName].

Explanation: This message is for the use case when an implementation has detected a Memory uncorrectable error recovery.

May also be shown as 816f010c2012ffff or 0x816f010c2012ffff

Severity: Info

Alert Category: Critical - Memory

Serviceable: No

CIM Information: **Prefix:** PLAT and **ID:** 0139

SNMP Trap ID: 41

Automatically notify Support: No

User response: This is a UEFI detected event. To find the UEFI diagnostic code for this event, in the information center, follow the instructions in "Finding the UEFI diagnostic code" under "UEFI diagnostic codes." Then, in the information center, open the topic for the UEFI diagnostic code and follow the instructions under "User response."

Related Links:

- "Finding the UEFI diagnostic code" on page 521

816f010c-2013ffff Uncorrectable error recovery detected for DIMM 19 on Subsystem [MemoryElementName].

Explanation: This message is for the use case when an implementation has detected a Memory uncorrectable error recovery.

May also be shown as 816f010c2013ffff or 0x816f010c2013ffff

Severity: Info

Alert Category: Critical - Memory

Serviceable: No

CIM Information: Prefix: PLAT and **ID:** 0139

SNMP Trap ID: 41

Automatically notify Support: No

User response: This is a UEFI detected event. To find the UEFI diagnostic code for this event, in the information center, follow the instructions in "Finding the UEFI diagnostic code" under "UEFI diagnostic codes." Then, in the information center, open the topic for the UEFI diagnostic code and follow the instructions under "User response."

Related Links:

- “Finding the UEFI diagnostic code” on page 521

816f010c-2014ffff Uncorrectable error recovery detected for DIMM 20 on Subsystem [MemoryElementName].

Explanation: This message is for the use case when an implementation has detected a Memory uncorrectable error recovery.

May also be shown as 816f010c2014ffff or 0x816f010c2014ffff

Severity: Info

Alert Category: Critical - Memory

Serviceable: No

CIM Information: Prefix: PLAT and **ID:** 0139

SNMP Trap ID: 41

Automatically notify Support: No

User response: This is a UEFI detected event. To find the UEFI diagnostic code for this event, in the information center, follow the instructions in "Finding the UEFI diagnostic code" under "UEFI diagnostic codes." Then, in the information center, open the topic for the UEFI diagnostic code and follow the instructions under "User response."

Related Links:

- “Finding the UEFI diagnostic code” on page 521

816f010c-2015ffff Uncorrectable error recovery detected for DIMM 21 on Subsystem [MemoryElementName].

Explanation: This message is for the use case when an implementation has detected a Memory uncorrectable error recovery.

May also be shown as 816f010c2015ffff or 0x816f010c2015ffff

Severity: Info

Alert Category: Critical - Memory

Serviceable: No

CIM Information: Prefix: PLAT and **ID:** 0139

SNMP Trap ID: 41

Automatically notify Support: No

User response: This is a UEFI detected event. To find the UEFI diagnostic code for this event, in the information

center, follow the instructions in "Finding the UEFI diagnostic code" under "UEFI diagnostic codes." Then, in the information center, open the topic for the UEFI diagnostic code and follow the instructions under "User response."

Related Links:

- "Finding the UEFI diagnostic code" on page 521

816f010c-2016ffff Uncorrectable error recovery detected for DIMM 22 on Subsystem [MemoryElementName].

Explanation: This message is for the use case when an implementation has detected a Memory uncorrectable error recovery.

May also be shown as 816f010c2016ffff or 0x816f010c2016ffff

Severity: Info

Alert Category: Critical - Memory

Serviceable: No

CIM Information: Prefix: PLAT and **ID:** 0139

SNMP Trap ID: 41

Automatically notify Support: No

User response: This is a UEFI detected event. To find the UEFI diagnostic code for this event, in the information center, follow the instructions in "Finding the UEFI diagnostic code" under "UEFI diagnostic codes." Then, in the information center, open the topic for the UEFI diagnostic code and follow the instructions under "User response."

Related Links:

- "Finding the UEFI diagnostic code" on page 521

816f010c-2017ffff Uncorrectable error recovery detected for DIMM 23 on Subsystem [MemoryElementName].

Explanation: This message is for the use case when an implementation has detected a Memory uncorrectable error recovery.

May also be shown as 816f010c2017ffff or 0x816f010c2017ffff

Severity: Info

Alert Category: Critical - Memory

Serviceable: No

CIM Information: Prefix: PLAT and **ID:** 0139

SNMP Trap ID: 41

Automatically notify Support: No

User response: This is a UEFI detected event. To find the UEFI diagnostic code for this event, in the information center, follow the instructions in "Finding the UEFI diagnostic code" under "UEFI diagnostic codes." Then, in the information center, open the topic for the UEFI diagnostic code and follow the instructions under "User response."

Related Links:

- "Finding the UEFI diagnostic code" on page 521

816f010c-2018ffff Uncorrectable error recovery detected for DIMM 24 on Subsystem [MemoryElementName].

Explanation: This message is for the use case when an implementation has detected a Memory uncorrectable error recovery.

May also be shown as 816f010c2018ffff or 0x816f010c2018ffff

Severity: Info

Alert Category: Critical - Memory

Serviceable: No

CIM Information: **Prefix:** PLAT and **ID:** 0139

SNMP Trap ID: 41

Automatically notify Support: No

User response: This is a UEFI detected event. To find the UEFI diagnostic code for this event, in the information center, follow the instructions in "Finding the UEFI diagnostic code" under "UEFI diagnostic codes." Then, in the information center, open the topic for the UEFI diagnostic code and follow the instructions under "User response."

Related Links:

- "Finding the UEFI diagnostic code" on page 521

816f010c-2581ffff Uncorrectable error recovery detected for [PhysicalMemoryElementName] on Subsystem [MemoryElementName].

Explanation: This message is for the use case when an implementation has detected a Memory uncorrectable error recovery. All DIMMs. One of the DIMMs.

May also be shown as 816f010c2581ffff or 0x816f010c2581ffff

Severity: Info

Alert Category: Critical - Memory

Serviceable: No

CIM Information: **Prefix:** PLAT and **ID:** 0139

SNMP Trap ID: 41

Automatically notify Support: No

User response: This is a UEFI detected event. To find the UEFI diagnostic code for this event, in the information center, follow the instructions in "Finding the UEFI diagnostic code" under "UEFI diagnostic codes." Then, in the information center, open the topic for the UEFI diagnostic code and follow the instructions under "User response."

Related Links:

- "Finding the UEFI diagnostic code" on page 521

816f010d-0400ffff The Drive Drive 0 has been enabled.

Explanation: The previously disabled hard disk drive 0 has been enabled.

May also be shown as 816f010d0400ffff or 0x816f010d0400ffff

Severity: Info

Alert Category: Critical - Hard Disk drive

Serviceable: No

CIM Information: **Prefix:** PLAT and **ID:** 0167

SNMP Trap ID: 5

Automatically notify Support: No

User response: Information only; no action is required.

816f010d-0401ffff The Drive Drive 1 has been enabled.

Explanation: The previously disabled hard disk drive 1 has been enabled.

May also be shown as 816f010d0401ffff or 0x816f010d0401ffff

Severity: Info

Alert Category: Critical - Hard Disk drive

Serviceable: No

CIM Information: **Prefix:** PLAT and **ID:** 0167

SNMP Trap ID: 5

Automatically notify Support: No

User response: Information only; no action is required.

816f010d-0402ffff The Drive Drive 2 has been enabled.

Explanation: The previously disabled hard disk drive 2 has been enabled.

May also be shown as 816f010d0402ffff or 0x816f010d0402ffff

Severity: Info

Alert Category: Critical - Hard Disk drive

Serviceable: No

CIM Information: **Prefix:** PLAT and **ID:** 0167

SNMP Trap ID: 5

Automatically notify Support: No

User response: Information only; no action is required.

816f010d-0403ffff The Drive Drive 3 has been enabled.

Explanation: The previously disabled hard disk drive 3 has been enabled.

May also be shown as 816f010d0403ffff or 0x816f010d0403ffff

Severity: Info

Alert Category: Critical - Hard Disk drive

Serviceable: No

CIM Information: **Prefix:** PLAT and **ID:** 0167

SNMP Trap ID: 5

Automatically notify Support: No

User response: Information only; no action is required.

816f010d-0404ffff The Drive Drive 4 has been enabled.

Explanation: The previously disabled hard disk drive 4 has been enabled.

May also be shown as 816f010d0404ffff or 0x816f010d0404ffff

Severity: Info

Alert Category: Critical - Hard Disk drive

Serviceable: No

CIM Information: **Prefix:** PLAT and **ID:** 0167

SNMP Trap ID: 5

Automatically notify Support: No

User response: Information only; no action is required.

816f010d-0405ffff The Drive Drive 5 has been enabled.

Explanation: The previously disabled hard disk drive 5 has been enabled.

May also be shown as 816f010d0405ffff or 0x816f010d0405ffff

Severity: Info

Alert Category: Critical - Hard Disk drive

Serviceable: No

CIM Information: Prefix: PLAT and **ID:** 0167

SNMP Trap ID: 5

Automatically notify Support: No

User response: Information only; no action is required.

816f010d-0406ffff The Drive Drive 6 has been enabled.

Explanation: The previously disabled hard disk drive 6 has been enabled.

May also be shown as 816f010d0406ffff or 0x816f010d0406ffff

Severity: Info

Alert Category: Critical - Hard Disk drive

Serviceable: No

CIM Information: Prefix: PLAT and **ID:** 0167

SNMP Trap ID: 5

Automatically notify Support: No

User response: Information only; no action is required.

816f010d-0407ffff The Drive Drive 7 has been enabled.

Explanation: The previously disabled hard disk drive 7 has been enabled.

May also be shown as 816f010d0407ffff or 0x816f010d0407ffff

Severity: Info

Alert Category: Critical - Hard Disk drive

Serviceable: No

CIM Information: Prefix: PLAT and **ID:** 0167

SNMP Trap ID: 5

Automatically notify Support: No

User response: Information only; no action is required.

816f010f-2201ffff The System [ComputerSystemElementName] has recovered from a firmware hang.

Explanation: This message is for the use case when an implementation has recovered from a System Firmware Hang.

May also be shown as 816f010f2201ffff or 0x816f010f2201ffff

Severity: Info

Alert Category: Critical - Other

Serviceable: No

CIM Information: Prefix: PLAT and **ID:** 0187

SNMP Trap ID: 50

Automatically notify Support: No

User response: This is a UEFI detected event. To find the UEFI diagnostic code for this event, in the information center, follow the instructions in "Finding the UEFI diagnostic code" under "UEFI diagnostic codes." Then, in the information center, open the topic for the UEFI diagnostic code and follow the instructions under "User response."

Related Links:

- “Finding the UEFI diagnostic code” on page 521

816f011b-0c01ffff The connector LightPath configuration error has been repaired.

Explanation: The light path connection has been restored.

May also be shown as 816f011b0c01ffff or 0x816f011b0c01ffff

Severity: Info

Alert Category: Critical - Other

Serviceable: No

CIM Information: Prefix: PLAT and **ID:** 0267

SNMP Trap ID: 50

Automatically notify Support: No

User response: Information only; no action is required.

816f0125-1f05ffff [ManagedElementName] detected as present.

Explanation: The specified element is present.

May also be shown as 816f01251f05ffff or 0x816f01251f05ffff

Severity: Info

Alert Category: System - Other

Serviceable: No

CIM Information: Prefix: PLAT and **ID:** 0390

SNMP Trap ID:

Automatically notify Support: No

User response: Information only; no action is required.

816f0207-0301ffff CPU 1 has Recovered from FRB1/BIST condition.

Explanation: This message is for the use case when an implementation has detected a Processor Recovered - FRB1/BIST condition.

May also be shown as 816f02070301ffff or 0x816f02070301ffff

Severity: Info

Alert Category: Critical - CPU

Serviceable: No

CIM Information: Prefix: PLAT and **ID:** 0045

SNMP Trap ID: 40

Automatically notify Support: No

User response: This is a UEFI detected event. To find the UEFI diagnostic code for this event, in the information center, follow the instructions in "Finding the UEFI diagnostic code" under "UEFI diagnostic codes." Then, in the information center, open the topic for the UEFI diagnostic code and follow the instructions under "User response."

Related Links:

- “Finding the UEFI diagnostic code” on page 521

816f0207-0302ffff CPU 2 has Recovered from FRB1/BIST condition.

Explanation: This message is for the use case when an implementation has detected a Processor Recovered - FRB1/BIST condition.

May also be shown as 816f02070302ffff or 0x816f02070302ffff

Severity: Info

Alert Category: Critical - CPU

Serviceable: No

CIM Information: Prefix: PLAT and **ID:** 0045

SNMP Trap ID: 40

Automatically notify Support: No

User response: This is a UEFI detected event. To find the UEFI diagnostic code for this event, in the information center, follow the instructions in "Finding the UEFI diagnostic code" under "UEFI diagnostic codes." Then, in the information center, open the topic for the UEFI diagnostic code and follow the instructions under "User response."

Related Links:

- “Finding the UEFI diagnostic code” on page 521

816f0207-2584ffff [ProcessorElementName] has Recovered from FRB1/BIST condition.

Explanation: This message is for the use case when an implementation has detected a Processor Recovered - FRB1/BIST condition. (It might be All CPUs or One of CPUs as well)

May also be shown as 816f02072584ffff or 0x816f02072584ffff

Severity: Info

Alert Category: Critical - CPU

Serviceable: No

CIM Information: Prefix: PLAT and **ID:** 0045

SNMP Trap ID: 40

Automatically notify Support: No

User response: This is a UEFI detected event. To find the UEFI diagnostic code for this event, in the information center, follow the instructions in "Finding the UEFI diagnostic code" under "UEFI diagnostic codes." Then, in the information center, open the topic for the UEFI diagnostic code and follow the instructions under "User response."

Related Links:

- “Finding the UEFI diagnostic code” on page 521

816f020d-0400ffff Failure no longer Predicted on drive Drive 0 for array [ComputerSystemElementName].

Explanation: Failure of hard disk drive 0 is no longer predicted.

May also be shown as 816f020d0400ffff or 0x816f020d0400ffff

Severity: Info

Alert Category: System - Predicted Failure

Serviceable: No

CIM Information: Prefix: PLAT and **ID:** 0169

SNMP Trap ID: 27

Automatically notify Support: No

User response: Information only; no action is required.

816f020d-0401ffff Failure no longer Predicted on drive Drive 1 for array [ComputerSystemElementName].

Explanation: Failure of hard disk drive 1 is no longer predicted.

May also be shown as 816f020d0401ffff or 0x816f020d0401ffff

Severity: Info

Alert Category: System - Predicted Failure

Serviceable: No

CIM Information: Prefix: PLAT and **ID:** 0169

SNMP Trap ID: 27

Automatically notify Support: No

User response: Information only; no action is required.

816f020d-0402ffff Failure no longer Predicted on drive Drive 2 for array [ComputerSystemElementName].

Explanation: Failure of hard disk drive 2 is no longer predicted.

May also be shown as 816f020d0402ffff or 0x816f020d0402ffff

Severity: Info

Alert Category: System - Predicted Failure

Serviceable: No

CIM Information: Prefix: PLAT and **ID:** 0169

SNMP Trap ID: 27

Automatically notify Support: No

User response: Information only; no action is required.

816f020d-0403ffff Failure no longer Predicted on drive Drive 3 for array [ComputerSystemElementName].

Explanation: Failure of hard disk drive 3 is no longer predicted.

May also be shown as 816f020d0403ffff or 0x816f020d0403ffff

Severity: Info

Alert Category: System - Predicted Failure

Serviceable: No

CIM Information: Prefix: PLAT and **ID:** 0169

SNMP Trap ID: 27

Automatically notify Support: No

User response: Information only; no action is required.

816f020d-0404ffff Failure no longer Predicted on drive Drive 4 for array [ComputerSystemElementName].

Explanation: Failure of hard disk drive 4 is no longer predicted.

May also be shown as 816f020d0404ffff or 0x816f020d0404ffff

Severity: Info

Alert Category: System - Predicted Failure

Serviceable: No

CIM Information: Prefix: PLAT and **ID:** 0169

SNMP Trap ID: 27

Automatically notify Support: No

User response: Information only; no action is required.

816f020d-0405ffff Failure no longer Predicted on drive Drive 5 for array [ComputerSystemElementName].

Explanation: Failure of hard disk drive 5 is no longer predicted.

May also be shown as 816f020d0405ffff or 0x816f020d0405ffff

Severity: Info

Alert Category: System - Predicted Failure

Serviceable: No

CIM Information: Prefix: PLAT and **ID:** 0169

SNMP Trap ID: 27

Automatically notify Support: No

User response: Information only; no action is required.

816f020d-0406ffff Failure no longer Predicted on drive Drive 6 for array [ComputerSystemElementName].

Explanation: Failure of hard disk drive 6 is no longer predicted.

May also be shown as 816f020d0406ffff or 0x816f020d0406ffff

Severity: Info

Alert Category: System - Predicted Failure

Serviceable: No

CIM Information: Prefix: PLAT and **ID:** 0169

SNMP Trap ID: 27

Automatically notify Support: No

User response: Information only; no action is required.

816f020d-0407ffff Failure no longer Predicted on drive Drive 7 for array [ComputerSystemElementName].

Explanation: Failure of hard disk drive 7 is no longer predicted.

May also be shown as 816f020d0407ffff or 0x816f020d0407ffff

Severity: Info

Alert Category: System - Predicted Failure

Serviceable: No

CIM Information: Prefix: PLAT and **ID:** 0169

SNMP Trap ID: 27

Automatically notify Support: No

User response: Information only; no action is required.

816f030c-2001ffff Scrub Failure for [PhysicalMemoryElementName] on Subsystem [MemoryElementName]has recovered.

Explanation: A Memory Scrub failure detected during boot has recovered.

May also be shown as 816f030c2001ffff or 0x816f030c2001ffff

Severity: Info

Alert Category: Critical - Memory

Serviceable: No

CIM Information: Prefix: PLAT and **ID:** 0137

SNMP Trap ID: 41

Automatically notify Support: No

User response: Information only; no action is required.

816f030c-2002ffff Scrub Failure for [PhysicalMemoryElementName] on Subsystem [MemoryElementName]has recovered.

Explanation: A Memory Scrub failure detected during boot has recovered.

May also be shown as 816f030c2002ffff or 0x816f030c2002ffff

Severity: Info

Alert Category: Critical - Memory

Serviceable: No

CIM Information: Prefix: PLAT and **ID:** 0137

SNMP Trap ID: 41

Automatically notify Support: No

User response: Information only; no action is required.

816f030c-2003ffff Scrub Failure for [PhysicalMemoryElementName] on Subsystem [MemoryElementName]has recovered.

Explanation: A Memory Scrub failure detected during boot has recovered.

May also be shown as 816f030c2003ffff or 0x816f030c2003ffff

Severity: Info

Alert Category: Critical - Memory

Serviceable: No

CIM Information: Prefix: PLAT and **ID:** 0137

SNMP Trap ID: 41

Automatically notify Support: No

User response: Information only; no action is required.

816f030c-2004ffff Scrub Failure for [PhysicalMemoryElementName] on Subsystem [MemoryElementName]has recovered.

Explanation: A Memory Scrub failure detected during boot has recovered.

May also be shown as 816f030c2004ffff or 0x816f030c2004ffff

Severity: Info

Alert Category: Critical - Memory

Serviceable: No

CIM Information: Prefix: PLAT and **ID:** 0137

SNMP Trap ID: 41

Automatically notify Support: No

User response: Information only; no action is required.

816f030c-2005ffff Scrub Failure for [PhysicalMemoryElementName] on Subsystem [MemoryElementName]has recovered.

Explanation: A Memory Scrub failure detected during boot has recovered.

May also be shown as 816f030c2005ffff or 0x816f030c2005ffff

Severity: Info

Alert Category: Critical - Memory

Serviceable: No

CIM Information: Prefix: PLAT and **ID:** 0137

SNMP Trap ID: 41

Automatically notify Support: No

User response: Information only; no action is required.

816f030c-2006ffff Scrub Failure for [PhysicalMemoryElementName] on Subsystem [MemoryElementName]has recovered.

Explanation: A Memory Scrub failure detected during boot has recovered.

May also be shown as 816f030c2006ffff or 0x816f030c2006ffff

Severity: Info

Alert Category: Critical - Memory

Serviceable: No

CIM Information: Prefix: PLAT and **ID:** 0137

SNMP Trap ID: 41

Automatically notify Support: No

User response: Information only; no action is required.

816f030c-2007ffff Scrub Failure for [PhysicalMemoryElementName] on Subsystem [MemoryElementName]has recovered.

Explanation: A Memory Scrub failure detected during boot has recovered.

May also be shown as 816f030c2007ffff or 0x816f030c2007ffff

Severity: Info

Alert Category: Critical - Memory

Serviceable: No

CIM Information: Prefix: PLAT and **ID:** 0137

SNMP Trap ID: 41

Automatically notify Support: No

User response: Information only; no action is required.

816f030c-2008ffff Scrub Failure for [PhysicalMemoryElementName] on Subsystem [MemoryElementName]has recovered.

Explanation: A Memory Scrub failure detected during boot has recovered.

May also be shown as 816f030c2008ffff or 0x816f030c2008ffff

Severity: Info

Alert Category: Critical - Memory

Serviceable: No

CIM Information: Prefix: PLAT and **ID:** 0137

SNMP Trap ID: 41

Automatically notify Support: No

User response: Information only; no action is required.

816f030c-2009ffff Scrub Failure for [PhysicalMemoryElementName] on Subsystem [MemoryElementName]has recovered.

Explanation: A Memory Scrub failure detected during boot has recovered.

May also be shown as 816f030c2009ffff or 0x816f030c2009ffff

Severity: Info

Alert Category: Critical - Memory

Serviceable: No

CIM Information: Prefix: PLAT and **ID:** 0137

SNMP Trap ID: 41

Automatically notify Support: No

User response: Information only; no action is required.

816f030c-200affff Scrub Failure for [PhysicalMemoryElementName] on Subsystem [MemoryElementName]has recovered.

Explanation: A Memory Scrub failure detected during boot has recovered.

May also be shown as 816f030c200affff or 0x816f030c200affff

Severity: Info

Alert Category: Critical - Memory

Serviceable: No

CIM Information: Prefix: PLAT and **ID:** 0137

SNMP Trap ID: 41

Automatically notify Support: No

User response: Information only; no action is required.

816f030c-200bffff Scrub Failure for [PhysicalMemoryElementName] on Subsystem [MemoryElementName]has recovered.

Explanation: A Memory Scrub failure detected during boot has recovered.

May also be shown as 816f030c200bffff or 0x816f030c200bffff

Severity: Info

Alert Category: Critical - Memory

Serviceable: No

CIM Information: Prefix: PLAT and **ID:** 0137

SNMP Trap ID: 41

Automatically notify Support: No

User response: Information only; no action is required.

816f030c-200cffff Scrub Failure for [PhysicalMemoryElementName] on Subsystem [MemoryElementName]has recovered.

Explanation: A Memory Scrub failure detected during boot has recovered.

May also be shown as 816f030c200cffff or 0x816f030c200cffff

Severity: Info

Alert Category: Critical - Memory

Serviceable: No

CIM Information: Prefix: PLAT and **ID:** 0137

SNMP Trap ID: 41

Automatically notify Support: No

User response: Information only; no action is required.

816f030c-200dffff Scrub Failure for [PhysicalMemoryElementName] on Subsystem [MemoryElementName]has recovered.

Explanation: A Memory Scrub failure detected during boot has recovered.

May also be shown as 816f030c200dffff or 0x816f030c200dffff

Severity: Info

Alert Category: Critical - Memory

Serviceable: No

CIM Information: Prefix: PLAT and **ID:** 0137

SNMP Trap ID: 41

Automatically notify Support: No

User response: Information only; no action is required.

816f030c-200effff Scrub Failure for [PhysicalMemoryElementName] on Subsystem [MemoryElementName]has recovered.

Explanation: A Memory Scrub failure detected during boot has recovered.

May also be shown as 816f030c200effff or 0x816f030c200effff

Severity: Info

Alert Category: Critical - Memory

Serviceable: No

CIM Information: Prefix: PLAT and **ID:** 0137

SNMP Trap ID: 41

Automatically notify Support: No

User response: Information only; no action is required.

816f030c-200fffff Scrub Failure for [PhysicalMemoryElementName] on Subsystem [MemoryElementName]has recovered.

Explanation: A Memory Scrub failure detected during boot has recovered.

May also be shown as 816f030c200fffff or 0x816f030c200fffff

Severity: Info

Alert Category: Critical - Memory

Serviceable: No

CIM Information: Prefix: PLAT and **ID:** 0137

SNMP Trap ID: 41

Automatically notify Support: No

User response: Information only; no action is required.

816f030c-2010ffff Scrub Failure for [PhysicalMemoryElementName] on Subsystem [MemoryElementName]has recovered.

Explanation: A Memory Scrub failure detected during boot has recovered.

May also be shown as 816f030c2010ffff or 0x816f030c2010ffff

Severity: Info

Alert Category: Critical - Memory

Serviceable: No

CIM Information: Prefix: PLAT and **ID:** 0137

SNMP Trap ID: 41

Automatically notify Support: No

User response: Information only; no action is required.

816f030c-2011ffff Scrub Failure for [PhysicalMemoryElementName] on Subsystem [MemoryElementName]has recovered.

Explanation: A Memory Scrub failure detected during boot has recovered.

May also be shown as 816f030c2011ffff or 0x816f030c2011ffff

Severity: Info

Alert Category: Critical - Memory

Serviceable: No

CIM Information: Prefix: PLAT and **ID:** 0137

SNMP Trap ID: 41

Automatically notify Support: No

User response: Information only; no action is required.

816f030c-2012ffff Scrub Failure for [PhysicalMemoryElementName] on Subsystem [MemoryElementName]has recovered.

Explanation: A Memory Scrub failure detected during boot has recovered.

May also be shown as 816f030c2012ffff or 0x816f030c2012ffff

Severity: Info

Alert Category: Critical - Memory

Serviceable: No

CIM Information: Prefix: PLAT and **ID:** 0137

SNMP Trap ID: 41

Automatically notify Support: No

User response: Information only; no action is required.

816f030c-2013ffff Scrub Failure for [PhysicalMemoryElementName] on Subsystem [MemoryElementName]has recovered.

Explanation: A Memory Scrub failure detected during boot has recovered.

May also be shown as 816f030c2013ffff or 0x816f030c2013ffff

Severity: Info

Alert Category: Critical - Memory

Serviceable: No

CIM Information: Prefix: PLAT and **ID:** 0137

SNMP Trap ID: 41

Automatically notify Support: No

User response: Information only; no action is required.

816f030c-2014ffff Scrub Failure for [PhysicalMemoryElementName] on Subsystem [MemoryElementName]has recovered.

Explanation: A Memory Scrub failure detected during boot has recovered.

May also be shown as 816f030c2014ffff or 0x816f030c2014ffff

Severity: Info

Alert Category: Critical - Memory

Serviceable: No

CIM Information: Prefix: PLAT and **ID:** 0137

SNMP Trap ID: 41

Automatically notify Support: No

User response: Information only; no action is required.

816f030c-2015ffff Scrub Failure for [PhysicalMemoryElementName] on Subsystem [MemoryElementName]has recovered.

Explanation: A Memory Scrub failure detected during boot has recovered.

May also be shown as 816f030c2015ffff or 0x816f030c2015ffff

Severity: Info

Alert Category: Critical - Memory

Serviceable: No

CIM Information: Prefix: PLAT and **ID:** 0137

SNMP Trap ID: 41

Automatically notify Support: No

User response: Information only; no action is required.

816f030c-2016ffff Scrub Failure for [PhysicalMemoryElementName] on Subsystem [MemoryElementName]has recovered.

Explanation: A Memory Scrub failure detected during boot has recovered.

May also be shown as 816f030c2016ffff or 0x816f030c2016ffff

Severity: Info

Alert Category: Critical - Memory

Serviceable: No

CIM Information: Prefix: PLAT and **ID:** 0137

SNMP Trap ID: 41

Automatically notify Support: No

User response: Information only; no action is required.

816f030c-2017ffff Scrub Failure for [PhysicalMemoryElementName] on Subsystem [MemoryElementName]has recovered.

Explanation: A Memory Scrub failure detected during boot has recovered.

May also be shown as 816f030c2017ffff or 0x816f030c2017ffff

Severity: Info

Alert Category: Critical - Memory

Serviceable: No

CIM Information: Prefix: PLAT and **ID:** 0137

SNMP Trap ID: 41

Automatically notify Support: No

User response: Information only; no action is required.

816f030c-2018ffff Scrub Failure for [PhysicalMemoryElementName] on Subsystem [MemoryElementName]has recovered.

Explanation: A Memory Scrub failure detected during boot has recovered.

May also be shown as 816f030c2018ffff or 0x816f030c2018ffff

Severity: Info

Alert Category: Critical - Memory

Serviceable: No

CIM Information: Prefix: PLAT and **ID:** 0137

SNMP Trap ID: 41

Automatically notify Support: No

User response: Information only; no action is required.

816f030c-2581ffff Scrub Failure for [PhysicalMemoryElementName] on Subsystem [MemoryElementName]has recovered.

Explanation: A Memory Scrub failure detected during boot has recovered.

May also be shown as 816f030c2581ffff or 0x816f030c2581ffff

Severity: Info

Alert Category: Critical - Memory

Serviceable: No

CIM Information: Prefix: PLAT and **ID:** 0137

SNMP Trap ID: 41

Automatically notify Support: No

User response: Information only; no action is required.

816f0313-1701ffff System [ComputerSystemElementName] has recovered from an NMI.

Explanation: This message is for the use case when an implementation has detected a Software NMI has been Recovered from.

May also be shown as 816f03131701ffff or 0x816f03131701ffff

Severity: Info

Alert Category: Critical - Other

Serviceable: No

CIM Information: Prefix: PLAT and **ID:** 0230

SNMP Trap ID: 50

Automatically notify Support: No

User response: Information only; no action is required.

816f040c-2001ffff DIMM 1 Enabled on Subsystem [MemoryElementName].

Explanation: This message is for the use case when an implementation has detected that Memory has been Enabled.

May also be shown as 816f040c2001ffff or 0x816f040c2001ffff

Severity: Info

Alert Category: System - Other

Serviceable: No

CIM Information: Prefix: PLAT and **ID:** 0130

SNMP Trap ID:

Automatically notify Support: No

User response: This is a UEFI detected event. To find the UEFI diagnostic code for this event, in the information center, follow the instructions in "Finding the UEFI diagnostic code" under "UEFI diagnostic codes." Then, in the information center, open the topic for the UEFI diagnostic code and follow the instructions under "User response."

Related Links:

- “Finding the UEFI diagnostic code” on page 521

816f040c-2002ffff DIMM 2 Enabled on Subsystem [MemoryElementName].

Explanation: This message is for the use case when an implementation has detected that Memory has been Enabled.

May also be shown as 816f040c2002ffff or 0x816f040c2002ffff

Severity: Info

Alert Category: System - Other

Serviceable: No

CIM Information: Prefix: PLAT and **ID:** 0130

SNMP Trap ID:

Automatically notify Support: No

User response: This is a UEFI detected event. To find the UEFI diagnostic code for this event, in the information center, follow the instructions in "Finding the UEFI diagnostic code" under "UEFI diagnostic codes." Then, in the information center, open the topic for the UEFI diagnostic code and follow the instructions under "User response."

Related Links:

• "Finding the UEFI diagnostic code" on page 521

816f040c-2003ffff DIMM 3 Enabled on Subsystem [MemoryElementName].

Explanation: This message is for the use case when an implementation has detected that Memory has been Enabled.

May also be shown as 816f040c2003ffff or 0x816f040c2003ffff

Severity: Info

Alert Category: System - Other

Serviceable: No

CIM Information: Prefix: PLAT and **ID:** 0130

SNMP Trap ID:

Automatically notify Support: No

User response: This is a UEFI detected event. To find the UEFI diagnostic code for this event, in the information center, follow the instructions in "Finding the UEFI diagnostic code" under "UEFI diagnostic codes." Then, in the information center, open the topic for the UEFI diagnostic code and follow the instructions under "User response."

Related Links:

• "Finding the UEFI diagnostic code" on page 521

816f040c-2004ffff DIMM 4 Enabled on Subsystem [MemoryElementName].

Explanation: This message is for the use case when an implementation has detected that Memory has been Enabled.

May also be shown as 816f040c2004ffff or 0x816f040c2004ffff

Severity: Info

Alert Category: System - Other

Serviceable: No

CIM Information: Prefix: PLAT and **ID:** 0130

SNMP Trap ID:

Automatically notify Support: No

User response: This is a UEFI detected event. To find the UEFI diagnostic code for this event, in the information center, follow the instructions in "Finding the UEFI diagnostic code" under "UEFI diagnostic codes." Then, in the information center, open the topic for the UEFI diagnostic code and follow the instructions under "User response."

Related Links:

• "Finding the UEFI diagnostic code" on page 521

816f040c-2005ffff DIMM 5 Enabled on Subsystem [MemoryElementName].

Explanation: This message is for the use case when an implementation has detected that Memory has been Enabled.

May also be shown as 816f040c2005ffff or 0x816f040c2005ffff

Severity: Info

Alert Category: System - Other

Serviceable: No

CIM Information: Prefix: PLAT and **ID:** 0130

SNMP Trap ID:

Automatically notify Support: No

User response: This is a UEFI detected event. To find the UEFI diagnostic code for this event, in the information center, follow the instructions in "Finding the UEFI diagnostic code" under "UEFI diagnostic codes." Then, in the information center, open the topic for the UEFI diagnostic code and follow the instructions under "User response."

Related Links:

- “Finding the UEFI diagnostic code” on page 521

816f040c-2006ffff DIMM 6 Enabled on Subsystem [MemoryElementName].

Explanation: This message is for the use case when an implementation has detected that Memory has been Enabled.

May also be shown as 816f040c2006ffff or 0x816f040c2006ffff

Severity: Info

Alert Category: System - Other

Serviceable: No

CIM Information: Prefix: PLAT and **ID:** 0130

SNMP Trap ID:

Automatically notify Support: No

User response: This is a UEFI detected event. To find the UEFI diagnostic code for this event, in the information center, follow the instructions in "Finding the UEFI diagnostic code" under "UEFI diagnostic codes." Then, in the information center, open the topic for the UEFI diagnostic code and follow the instructions under "User response."

Related Links:

- “Finding the UEFI diagnostic code” on page 521

816f040c-2007ffff DIMM 7 Enabled on Subsystem [MemoryElementName].

Explanation: This message is for the use case when an implementation has detected that Memory has been Enabled.

May also be shown as 816f040c2007ffff or 0x816f040c2007ffff

Severity: Info

Alert Category: System - Other

Serviceable: No

CIM Information: Prefix: PLAT and **ID:** 0130

SNMP Trap ID:

Automatically notify Support: No

User response: This is a UEFI detected event. To find the UEFI diagnostic code for this event, in the information center, follow the instructions in "Finding the UEFI diagnostic code" under "UEFI diagnostic codes." Then, in the information center, open the topic for the UEFI diagnostic code and follow the instructions under "User response."

Related Links:

- “Finding the UEFI diagnostic code” on page 521

816f040c-2008ffff DIMM 8 Enabled on Subsystem [MemoryElementName].

Explanation: This message is for the use case when an implementation has detected that Memory has been Enabled.

May also be shown as 816f040c2008ffff or 0x816f040c2008ffff

Severity: Info

Alert Category: System - Other

Serviceable: No

CIM Information: **Prefix:** PLAT and **ID:** 0130

SNMP Trap ID:

Automatically notify Support: No

User response: This is a UEFI detected event. To find the UEFI diagnostic code for this event, in the information center, follow the instructions in "Finding the UEFI diagnostic code" under "UEFI diagnostic codes." Then, in the information center, open the topic for the UEFI diagnostic code and follow the instructions under "User response."

Related Links:

- “Finding the UEFI diagnostic code” on page 521

816f040c-2009ffff DIMM 9 Enabled on Subsystem [MemoryElementName].

Explanation: This message is for the use case when an implementation has detected that Memory has been Enabled.

May also be shown as 816f040c2009ffff or 0x816f040c2009ffff

Severity: Info

Alert Category: System - Other

Serviceable: No

CIM Information: **Prefix:** PLAT and **ID:** 0130

SNMP Trap ID:

Automatically notify Support: No

User response: This is a UEFI detected event. To find the UEFI diagnostic code for this event, in the information center, follow the instructions in "Finding the UEFI diagnostic code" under "UEFI diagnostic codes." Then, in the information center, open the topic for the UEFI diagnostic code and follow the instructions under "User response."

Related Links:

- “Finding the UEFI diagnostic code” on page 521

816f040c-200affff DIMM 10 Enabled on Subsystem [MemoryElementName].

Explanation: This message is for the use case when an implementation has detected that Memory has been Enabled.

May also be shown as 816f040c200affff or 0x816f040c200affff

Severity: Info

Alert Category: System - Other

Serviceable: No

CIM Information: **Prefix:** PLAT and **ID:** 0130

SNMP Trap ID:

Automatically notify Support: No

User response: This is a UEFI detected event. To find the UEFI diagnostic code for this event, in the information center, follow the instructions in "Finding the UEFI diagnostic code" under "UEFI diagnostic codes." Then, in the information center, open the topic for the UEFI diagnostic code and follow the instructions under "User response."

Related Links:

- “Finding the UEFI diagnostic code” on page 521

816f040c-200bffff DIMM 11 Enabled on Subsystem [MemoryElementName].

Explanation: This message is for the use case when an implementation has detected that Memory has been Enabled.

May also be shown as 816f040c200bffff or 0x816f040c200bffff

Severity: Info

Alert Category: System - Other

Serviceable: No

CIM Information: **Prefix:** PLAT and **ID:** 0130

SNMP Trap ID:

Automatically notify Support: No

User response: This is a UEFI detected event. To find the UEFI diagnostic code for this event, in the information center, follow the instructions in "Finding the UEFI diagnostic code" under "UEFI diagnostic codes." Then, in the information center, open the topic for the UEFI diagnostic code and follow the instructions under "User response."

Related Links:

- "Finding the UEFI diagnostic code" on page 521

816f040c-200cffff DIMM 12 Enabled on Subsystem [MemoryElementName].

Explanation: This message is for the use case when an implementation has detected that Memory has been Enabled.

May also be shown as 816f040c200cffff or 0x816f040c200cffff

Severity: Info

Alert Category: System - Other

Serviceable: No

CIM Information: **Prefix:** PLAT and **ID:** 0130

SNMP Trap ID:

Automatically notify Support: No

User response: This is a UEFI detected event. To find the UEFI diagnostic code for this event, in the information center, follow the instructions in "Finding the UEFI diagnostic code" under "UEFI diagnostic codes." Then, in the information center, open the topic for the UEFI diagnostic code and follow the instructions under "User response."

Related Links:

- "Finding the UEFI diagnostic code" on page 521

816f040c-200dffff DIMM 13 Enabled on Subsystem [MemoryElementName].

Explanation: This message is for the use case when an implementation has detected that Memory has been Enabled.

May also be shown as 816f040c200dffff or 0x816f040c200dffff

Severity: Info

Alert Category: System - Other

Serviceable: No

CIM Information: **Prefix:** PLAT and **ID:** 0130

SNMP Trap ID:

Automatically notify Support: No

User response: This is a UEFI detected event. To find the UEFI diagnostic code for this event, in the information center, follow the instructions in "Finding the UEFI diagnostic code" under "UEFI diagnostic codes." Then, in the information center, open the topic for the UEFI diagnostic code and follow the instructions under "User response."

Related Links:

- "Finding the UEFI diagnostic code" on page 521

816f040c-200effff DIMM 14 Enabled on Subsystem [MemoryElementName].

Explanation: This message is for the use case when an implementation has detected that Memory has been Enabled.

May also be shown as 816f040c200effff or 0x816f040c200effff

Severity: Info

Alert Category: System - Other

Serviceable: No

CIM Information: Prefix: PLAT and **ID:** 0130

SNMP Trap ID:

Automatically notify Support: No

User response: This is a UEFI detected event. To find the UEFI diagnostic code for this event, in the information center, follow the instructions in "Finding the UEFI diagnostic code" under "UEFI diagnostic codes." Then, in the information center, open the topic for the UEFI diagnostic code and follow the instructions under "User response."

Related Links:

- “Finding the UEFI diagnostic code” on page 521

816f040c-200fffff DIMM 15 Enabled on Subsystem [MemoryElementName].

Explanation: This message is for the use case when an implementation has detected that Memory has been Enabled.

May also be shown as 816f040c200fffff or 0x816f040c200fffff

Severity: Info

Alert Category: System - Other

Serviceable: No

CIM Information: Prefix: PLAT and **ID:** 0130

SNMP Trap ID:

Automatically notify Support: No

User response: This is a UEFI detected event. To find the UEFI diagnostic code for this event, in the information center, follow the instructions in "Finding the UEFI diagnostic code" under "UEFI diagnostic codes." Then, in the information center, open the topic for the UEFI diagnostic code and follow the instructions under "User response."

Related Links:

- “Finding the UEFI diagnostic code” on page 521

816f040c-2010ffff DIMM 16 Enabled on Subsystem [MemoryElementName].

Explanation: This message is for the use case when an implementation has detected that Memory has been Enabled.

May also be shown as 816f040c2010ffff or 0x816f040c2010ffff

Severity: Info

Alert Category: System - Other

Serviceable: No

CIM Information: Prefix: PLAT and **ID:** 0130

SNMP Trap ID:

Automatically notify Support: No

User response: This is a UEFI detected event. To find the UEFI diagnostic code for this event, in the information center, follow the instructions in "Finding the UEFI diagnostic code" under "UEFI diagnostic codes." Then, in the information center, open the topic for the UEFI diagnostic code and follow the instructions under "User response."

Related Links:

- “Finding the UEFI diagnostic code” on page 521

816f040c-2011ffff DIMM 17 Enabled on Subsystem [MemoryElementName].

Explanation: This message is for the use case when an implementation has detected that Memory has been Enabled.

May also be shown as 816f040c2011ffff or 0x816f040c2011ffff

Severity: Info

Alert Category: System - Other

Serviceable: No

CIM Information: Prefix: PLAT and **ID:** 0130

SNMP Trap ID:

Automatically notify Support: No

User response: This is a UEFI detected event. To find the UEFI diagnostic code for this event, in the information center, follow the instructions in "Finding the UEFI diagnostic code" under "UEFI diagnostic codes." Then, in the information center, open the topic for the UEFI diagnostic code and follow the instructions under "User response."

Related Links:

- “Finding the UEFI diagnostic code” on page 521

816f040c-2012ffff DIMM 18 Enabled on Subsystem [MemoryElementName].

Explanation: This message is for the use case when an implementation has detected that Memory has been Enabled.

May also be shown as 816f040c2012ffff or 0x816f040c2012ffff

Severity: Info

Alert Category: System - Other

Serviceable: No

CIM Information: Prefix: PLAT and **ID:** 0130

SNMP Trap ID:

Automatically notify Support: No

User response: This is a UEFI detected event. To find the UEFI diagnostic code for this event, in the information center, follow the instructions in "Finding the UEFI diagnostic code" under "UEFI diagnostic codes." Then, in the information center, open the topic for the UEFI diagnostic code and follow the instructions under "User response."

Related Links:

- “Finding the UEFI diagnostic code” on page 521

816f040c-2013ffff DIMM 19 Enabled on Subsystem [MemoryElementName].

Explanation: This message is for the use case when an implementation has detected that Memory has been Enabled.

May also be shown as 816f040c2013ffff or 0x816f040c2013ffff

Severity: Info

Alert Category: System - Other

Serviceable: No

CIM Information: Prefix: PLAT and **ID:** 0130

SNMP Trap ID:

Automatically notify Support: No

User response: This is a UEFI detected event. To find the UEFI diagnostic code for this event, in the information center, follow the instructions in "Finding the UEFI diagnostic code" under "UEFI diagnostic codes." Then, in the

information center, open the topic for the UEFI diagnostic code and follow the instructions under "User response."

Related Links:

- “Finding the UEFI diagnostic code” on page 521

816f040c-2014ffff DIMM 20 Enabled on Subsystem [MemoryElementName].

Explanation: This message is for the use case when an implementation has detected that Memory has been Enabled.

May also be shown as 816f040c2014ffff or 0x816f040c2014ffff

Severity: Info

Alert Category: System - Other

Serviceable: No

CIM Information: Prefix: PLAT and **ID:** 0130

SNMP Trap ID:

Automatically notify Support: No

User response: This is a UEFI detected event. To find the UEFI diagnostic code for this event, in the information center, follow the instructions in "Finding the UEFI diagnostic code" under "UEFI diagnostic codes." Then, in the information center, open the topic for the UEFI diagnostic code and follow the instructions under "User response."

Related Links:

- “Finding the UEFI diagnostic code” on page 521

816f040c-2015ffff DIMM 21 Enabled on Subsystem [MemoryElementName].

Explanation: This message is for the use case when an implementation has detected that Memory has been Enabled.

May also be shown as 816f040c2015ffff or 0x816f040c2015ffff

Severity: Info

Alert Category: System - Other

Serviceable: No

CIM Information: Prefix: PLAT and **ID:** 0130

SNMP Trap ID:

Automatically notify Support: No

User response: This is a UEFI detected event. To find the UEFI diagnostic code for this event, in the information center, follow the instructions in "Finding the UEFI diagnostic code" under "UEFI diagnostic codes." Then, in the information center, open the topic for the UEFI diagnostic code and follow the instructions under "User response."

Related Links:

- “Finding the UEFI diagnostic code” on page 521

816f040c-2016ffff DIMM 22 Enabled on Subsystem [MemoryElementName].

Explanation: This message is for the use case when an implementation has detected that Memory has been Enabled.

May also be shown as 816f040c2016ffff or 0x816f040c2016ffff

Severity: Info

Alert Category: System - Other

Serviceable: No

CIM Information: Prefix: PLAT and **ID:** 0130

SNMP Trap ID:

Automatically notify Support: No

User response: This is a UEFI detected event. To find the UEFI diagnostic code for this event, in the information center, follow the instructions in "Finding the UEFI diagnostic code" under "UEFI diagnostic codes." Then, in the information center, open the topic for the UEFI diagnostic code and follow the instructions under "User response."

Related Links:

• "Finding the UEFI diagnostic code" on page 521

816f040c-2017ffff DIMM 23 Enabled on Subsystem [MemoryElementName].

Explanation: This message is for the use case when an implementation has detected that Memory has been Enabled.

May also be shown as 816f040c2017ffff or 0x816f040c2017ffff

Severity: Info

Alert Category: System - Other

Serviceable: No

CIM Information: Prefix: PLAT and **ID:** 0130

SNMP Trap ID:

Automatically notify Support: No

User response: This is a UEFI detected event. To find the UEFI diagnostic code for this event, in the information center, follow the instructions in "Finding the UEFI diagnostic code" under "UEFI diagnostic codes." Then, in the information center, open the topic for the UEFI diagnostic code and follow the instructions under "User response."

Related Links:

• "Finding the UEFI diagnostic code" on page 521

816f040c-2018ffff DIMM 24 Enabled on Subsystem [MemoryElementName].

Explanation: This message is for the use case when an implementation has detected that Memory has been Enabled.

May also be shown as 816f040c2018ffff or 0x816f040c2018ffff

Severity: Info

Alert Category: System - Other

Serviceable: No

CIM Information: Prefix: PLAT and **ID:** 0130

SNMP Trap ID:

Automatically notify Support: No

User response: This is a UEFI detected event. To find the UEFI diagnostic code for this event, in the information center, follow the instructions in "Finding the UEFI diagnostic code" under "UEFI diagnostic codes." Then, in the information center, open the topic for the UEFI diagnostic code and follow the instructions under "User response."

Related Links:

• "Finding the UEFI diagnostic code" on page 521

816f040c-2581ffff [PhysicalMemoryElementName] Enabled on Subsystem [MemoryElementName].

Explanation: This message is for the use case when an implementation has detected that Memory has been Enabled. All DIMMs. One of the DIMMs.

May also be shown as 816f040c2581ffff or 0x816f040c2581ffff

Severity: Info

Alert Category: System - Other

Serviceable: No

CIM Information: Prefix: PLAT and **ID:** 0130

SNMP Trap ID:

Automatically notify Support: No

User response: This is a UEFI detected event. To find the UEFI diagnostic code for this event, in the information center, follow the instructions in "Finding the UEFI diagnostic code" under "UEFI diagnostic codes." Then, in the information center, open the topic for the UEFI diagnostic code and follow the instructions under "User response."

Related Links:

- “Finding the UEFI diagnostic code” on page 521

816f0413-2582ffff A PCI PERR recovery has occurred on system [ComputerSystemElementName].

Explanation: This message is for the use case when an implementation has detected a PCI PERR recovered. PCIs.

May also be shown as 816f04132582ffff or 0x816f04132582ffff

Severity: Info

Alert Category: Critical - Other

Serviceable: No

CIM Information: Prefix: PLAT and **ID:** 0233

SNMP Trap ID: 50

Automatically notify Support: No

User response: This is a UEFI detected event. To find the UEFI diagnostic code for this event, in the information center, follow the instructions in "Finding the UEFI diagnostic code" under "UEFI diagnostic codes." Then, in the information center, open the topic for the UEFI diagnostic code and follow the instructions under "User response."

Related Links:

- “Finding the UEFI diagnostic code” on page 521

816f0413-2c03ffff A PCI PERR recovery has occurred on system [ComputerSystemElementName].

Explanation: A PCI parity error is no longer detected in the I/O expansion adapter in PCIe adapter slot 3 in the PCI expansion unit.

May also be shown as 816f04132c03ffff or 0x816f04132c03ffff

Severity: Info

Alert Category: Critical - Other

Serviceable: No

CIM Information: Prefix: PLAT and **ID:** 0233

SNMP Trap ID: 50

Automatically notify Support: No

User response: Information only; no action is required.

816f0413-2c04ffff A PCI PERR recovery has occurred on system [ComputerSystemElementName].

Explanation: A PCI parity error is no longer detected in the I/O expansion adapter in PCIe adapter slot 4 in the PCI expansion unit.

May also be shown as 816f04132c04ffff or 0x816f04132c04ffff

Severity: Info

Alert Category: Critical - Other

Serviceable: No

CIM Information: Prefix: PLAT and **ID:** 0233

SNMP Trap ID: 50

Automatically notify Support: No

User response: Information only; no action is required.

816f0413-3101ffff A PCI PERR recovery has occurred on system [ComputerSystemElementName].

Explanation: A PCI parity error is no longer detected in the I/O expansion adapter in PCIe adapter slot 1 in the PCI expansion unit.

May also be shown as 816f04133101ffff or 0x816f04133101ffff

Severity: Info

Alert Category: Critical - Other

Serviceable: No

CIM Information: Prefix: PLAT and **ID:** 0233

SNMP Trap ID: 50

Automatically notify Support: No

User response: Information only; no action is required.

816f0413-3102ffff A PCI PERR recovery has occurred on system [ComputerSystemElementName].

Explanation: A PCI parity error is no longer detected in the I/O expansion adapter in PCIe adapter slot 2 in the PCI expansion unit.

May also be shown as 816f04133102ffff or 0x816f04133102ffff

Severity: Info

Alert Category: Critical - Other

Serviceable: No

CIM Information: Prefix: PLAT and **ID:** 0233

SNMP Trap ID: 50

Automatically notify Support: No

User response: Information only; no action is required.

816f0413-3103ffff A PCI PERR recovery has occurred on system [ComputerSystemElementName].

Explanation: A PCI parity error is no longer detected in the I/O expansion adapter in PCIe adapter slot 3 in the PCI expansion unit.

May also be shown as 816f04133103ffff or 0x816f04133103ffff

Severity: Info

Alert Category: Critical - Other

Serviceable: No

CIM Information: Prefix: PLAT and **ID:** 0233

SNMP Trap ID: 50

Automatically notify Support: No

User response: Information only; no action is required.

816f0413-3104ffff A PCI PERR recovery has occurred on system [ComputerSystemElementName].

Explanation: A PCI parity error is no longer detected in the I/O expansion adapter in PCIe adapter slot 4 in the PCI expansion unit.

May also be shown as 816f04133104ffff or 0x816f04133104ffff

Severity: Info

Alert Category: Critical - Other

Serviceable: No

CIM Information: Prefix: PLAT and **ID:** 0233

SNMP Trap ID: 50

Automatically notify Support: No

User response: Information only; no action is required.

816f0507-0301ffff CPU 1 has Recovered from a Configuration Mismatch.

Explanation: This message is for the use case when an implementation has Recovered from a Processor Configuration Mismatch.

May also be shown as 816f05070301ffff or 0x816f05070301ffff

Severity: Info

Alert Category: Critical - CPU

Serviceable: No

CIM Information: Prefix: PLAT and **ID:** 0063

SNMP Trap ID: 40

Automatically notify Support: No

User response: This is a UEFI detected event. To find the UEFI diagnostic code for this event, in the information center, follow the instructions in "Finding the UEFI diagnostic code" under "UEFI diagnostic codes." Then, in the information center, open the topic for the UEFI diagnostic code and follow the instructions under "User response."

Related Links:

- “Finding the UEFI diagnostic code” on page 521

816f0507-0302ffff CPU 2 has Recovered from a Configuration Mismatch.

Explanation: This message is for the use case when an implementation has Recovered from a Processor Configuration Mismatch.

May also be shown as 816f05070302ffff or 0x816f05070302ffff

Severity: Info

Alert Category: Critical - CPU

Serviceable: No

CIM Information: Prefix: PLAT and **ID:** 0063

SNMP Trap ID: 40

Automatically notify Support: No

User response: This is a UEFI detected event. To find the UEFI diagnostic code for this event, in the information center, follow the instructions in "Finding the UEFI diagnostic code" under "UEFI diagnostic codes." Then, in the information center, open the topic for the UEFI diagnostic code and follow the instructions under "User response."

Related Links:

- “Finding the UEFI diagnostic code” on page 521

816f0507-2584ffff [ProcessorElementName] has Recovered from a Configuration Mismatch.

Explanation: This message is for the use case when an implementation has Recovered from a Processor Configuration Mismatch. (It might be All CPUs or One of CPUs as well)

May also be shown as 816f05072584ffff or 0x816f05072584ffff

Severity: Info

Alert Category: Critical - CPU

Serviceable: No

CIM Information: Prefix: PLAT and **ID:** 0063

SNMP Trap ID: 40

Automatically notify Support: No

User response: This is a UEFI detected event. To find the UEFI diagnostic code for this event, in the information center, follow the instructions in "Finding the UEFI diagnostic code" under "UEFI diagnostic codes." Then, in the information center, open the topic for the UEFI diagnostic code and follow the instructions under "User response."

Related Links:

- "Finding the UEFI diagnostic code" on page 521

816f050c-2001ffff Memory Logging Limit Removed for DIMM 1 on Subsystem [MemoryElementName].

Explanation: This message is for the use case when an implementation has detected that the Memory Logging Limit has been Removed.

May also be shown as 816f050c2001ffff or 0x816f050c2001ffff

Severity: Info

Alert Category: Critical - Memory

Serviceable: No

CIM Information: Prefix: PLAT and **ID:** 0145

SNMP Trap ID: 41

Automatically notify Support: No

User response: This is a UEFI detected event. To find the UEFI diagnostic code for this event, in the information center, follow the instructions in "Finding the UEFI diagnostic code" under "UEFI diagnostic codes." Then, in the information center, open the topic for the UEFI diagnostic code and follow the instructions under "User response."

Related Links:

- "Finding the UEFI diagnostic code" on page 521

816f050c-2002ffff Memory Logging Limit Removed for DIMM 2 on Subsystem [MemoryElementName].

Explanation: This message is for the use case when an implementation has detected that the Memory Logging Limit has been Removed.

May also be shown as 816f050c2002ffff or 0x816f050c2002ffff

Severity: Info

Alert Category: Critical - Memory

Serviceable: No

CIM Information: Prefix: PLAT and **ID:** 0145

SNMP Trap ID: 41

Automatically notify Support: No

User response: This is a UEFI detected event. To find the UEFI diagnostic code for this event, in the information

center, follow the instructions in "Finding the UEFI diagnostic code" under "UEFI diagnostic codes." Then, in the information center, open the topic for the UEFI diagnostic code and follow the instructions under "User response."

Related Links:

- "Finding the UEFI diagnostic code" on page 521

816f050c-2003ffff Memory Logging Limit Removed for DIMM 3 on Subsystem [MemoryElementName].

Explanation: This message is for the use case when an implementation has detected that the Memory Logging Limit has been Removed.

May also be shown as 816f050c2003ffff or 0x816f050c2003ffff

Severity: Info

Alert Category: Critical - Memory

Serviceable: No

CIM Information: Prefix: PLAT and **ID:** 0145

SNMP Trap ID: 41

Automatically notify Support: No

User response: This is a UEFI detected event. To find the UEFI diagnostic code for this event, in the information center, follow the instructions in "Finding the UEFI diagnostic code" under "UEFI diagnostic codes." Then, in the information center, open the topic for the UEFI diagnostic code and follow the instructions under "User response."

Related Links:

- "Finding the UEFI diagnostic code" on page 521

816f050c-2004ffff Memory Logging Limit Removed for DIMM 4 on Subsystem [MemoryElementName].

Explanation: This message is for the use case when an implementation has detected that the Memory Logging Limit has been Removed.

May also be shown as 816f050c2004ffff or 0x816f050c2004ffff

Severity: Info

Alert Category: Critical - Memory

Serviceable: No

CIM Information: Prefix: PLAT and **ID:** 0145

SNMP Trap ID: 41

Automatically notify Support: No

User response: This is a UEFI detected event. To find the UEFI diagnostic code for this event, in the information center, follow the instructions in "Finding the UEFI diagnostic code" under "UEFI diagnostic codes." Then, in the information center, open the topic for the UEFI diagnostic code and follow the instructions under "User response."

Related Links:

- "Finding the UEFI diagnostic code" on page 521

816f050c-2005ffff Memory Logging Limit Removed for DIMM 5 on Subsystem [MemoryElementName].

Explanation: This message is for the use case when an implementation has detected that the Memory Logging Limit has been Removed.

May also be shown as 816f050c2005ffff or 0x816f050c2005ffff

Severity: Info

Alert Category: Critical - Memory

Serviceable: No

CIM Information: **Prefix:** PLAT and **ID:** 0145

SNMP Trap ID: 41

Automatically notify Support: No

User response: This is a UEFI detected event. To find the UEFI diagnostic code for this event, in the information center, follow the instructions in "Finding the UEFI diagnostic code" under "UEFI diagnostic codes." Then, in the information center, open the topic for the UEFI diagnostic code and follow the instructions under "User response."

Related Links:

- "Finding the UEFI diagnostic code" on page 521

816f050c-2006ffff Memory Logging Limit Removed for DIMM 6 on Subsystem [MemoryElementName].

Explanation: This message is for the use case when an implementation has detected that the Memory Logging Limit has been Removed.

May also be shown as 816f050c2006ffff or 0x816f050c2006ffff

Severity: Info

Alert Category: Critical - Memory

Serviceable: No

CIM Information: **Prefix:** PLAT and **ID:** 0145

SNMP Trap ID: 41

Automatically notify Support: No

User response: This is a UEFI detected event. To find the UEFI diagnostic code for this event, in the information center, follow the instructions in "Finding the UEFI diagnostic code" under "UEFI diagnostic codes." Then, in the information center, open the topic for the UEFI diagnostic code and follow the instructions under "User response."

Related Links:

- "Finding the UEFI diagnostic code" on page 521

816f050c-2007ffff Memory Logging Limit Removed for DIMM 7 on Subsystem [MemoryElementName].

Explanation: This message is for the use case when an implementation has detected that the Memory Logging Limit has been Removed.

May also be shown as 816f050c2007ffff or 0x816f050c2007ffff

Severity: Info

Alert Category: Critical - Memory

Serviceable: No

CIM Information: **Prefix:** PLAT and **ID:** 0145

SNMP Trap ID: 41

Automatically notify Support: No

User response: This is a UEFI detected event. To find the UEFI diagnostic code for this event, in the information center, follow the instructions in "Finding the UEFI diagnostic code" under "UEFI diagnostic codes." Then, in the information center, open the topic for the UEFI diagnostic code and follow the instructions under "User response."

Related Links:

- "Finding the UEFI diagnostic code" on page 521

816f050c-2008ffff Memory Logging Limit Removed for DIMM 8 on Subsystem [MemoryElementName].

Explanation: This message is for the use case when an implementation has detected that the Memory Logging Limit has been Removed.

May also be shown as 816f050c2008ffff or 0x816f050c2008ffff

Severity: Info

Alert Category: Critical - Memory

Serviceable: No

CIM Information: Prefix: PLAT and **ID:** 0145

SNMP Trap ID: 41

Automatically notify Support: No

User response: This is a UEFI detected event. To find the UEFI diagnostic code for this event, in the information center, follow the instructions in "Finding the UEFI diagnostic code" under "UEFI diagnostic codes." Then, in the information center, open the topic for the UEFI diagnostic code and follow the instructions under "User response."

Related Links:

- “Finding the UEFI diagnostic code” on page 521

816f050c-2009ffff Memory Logging Limit Removed for DIMM 9 on Subsystem [MemoryElementName].

Explanation: This message is for the use case when an implementation has detected that the Memory Logging Limit has been Removed.

May also be shown as 816f050c2009ffff or 0x816f050c2009ffff

Severity: Info

Alert Category: Critical - Memory

Serviceable: No

CIM Information: Prefix: PLAT and **ID:** 0145

SNMP Trap ID: 41

Automatically notify Support: No

User response: This is a UEFI detected event. To find the UEFI diagnostic code for this event, in the information center, follow the instructions in "Finding the UEFI diagnostic code" under "UEFI diagnostic codes." Then, in the information center, open the topic for the UEFI diagnostic code and follow the instructions under "User response."

Related Links:

- “Finding the UEFI diagnostic code” on page 521

816f050c-200affff Memory Logging Limit Removed for DIMM 10 on Subsystem [MemoryElementName].

Explanation: This message is for the use case when an implementation has detected that the Memory Logging Limit has been Removed.

May also be shown as 816f050c200affff or 0x816f050c200affff

Severity: Info

Alert Category: Critical - Memory

Serviceable: No

CIM Information: Prefix: PLAT and **ID:** 0145

SNMP Trap ID: 41

Automatically notify Support: No

User response: This is a UEFI detected event. To find the UEFI diagnostic code for this event, in the information

center, follow the instructions in "Finding the UEFI diagnostic code" under "UEFI diagnostic codes." Then, in the information center, open the topic for the UEFI diagnostic code and follow the instructions under "User response."

Related Links:

- "Finding the UEFI diagnostic code" on page 521

816f050c-200bffff Memory Logging Limit Removed for DIMM 11 on Subsystem [MemoryElementName].

Explanation: This message is for the use case when an implementation has detected that the Memory Logging Limit has been Removed.

May also be shown as 816f050c200bffff or 0x816f050c200bffff

Severity: Info

Alert Category: Critical - Memory

Serviceable: No

CIM Information: Prefix: PLAT and **ID:** 0145

SNMP Trap ID: 41

Automatically notify Support: No

User response: This is a UEFI detected event. To find the UEFI diagnostic code for this event, in the information center, follow the instructions in "Finding the UEFI diagnostic code" under "UEFI diagnostic codes." Then, in the information center, open the topic for the UEFI diagnostic code and follow the instructions under "User response."

Related Links:

- "Finding the UEFI diagnostic code" on page 521

816f050c-200cffff Memory Logging Limit Removed for DIMM 12 on Subsystem [MemoryElementName].

Explanation: This message is for the use case when an implementation has detected that the Memory Logging Limit has been Removed.

May also be shown as 816f050c200cffff or 0x816f050c200cffff

Severity: Info

Alert Category: Critical - Memory

Serviceable: No

CIM Information: Prefix: PLAT and **ID:** 0145

SNMP Trap ID: 41

Automatically notify Support: No

User response: This is a UEFI detected event. To find the UEFI diagnostic code for this event, in the information center, follow the instructions in "Finding the UEFI diagnostic code" under "UEFI diagnostic codes." Then, in the information center, open the topic for the UEFI diagnostic code and follow the instructions under "User response."

Related Links:

- "Finding the UEFI diagnostic code" on page 521

816f050c-200dffff Memory Logging Limit Removed for DIMM 13 on Subsystem [MemoryElementName].

Explanation: This message is for the use case when an implementation has detected that the Memory Logging Limit has been Removed.

May also be shown as 816f050c200dffff or 0x816f050c200dffff

Severity: Info

Alert Category: Critical - Memory

Serviceable: No

CIM Information: **Prefix:** PLAT and **ID:** 0145

SNMP Trap ID: 41

Automatically notify Support: No

User response: This is a UEFI detected event. To find the UEFI diagnostic code for this event, in the information center, follow the instructions in "Finding the UEFI diagnostic code" under "UEFI diagnostic codes." Then, in the information center, open the topic for the UEFI diagnostic code and follow the instructions under "User response."

Related Links:

- "Finding the UEFI diagnostic code" on page 521

816f050c-200effff Memory Logging Limit Removed for DIMM 14 on Subsystem [MemoryElementName].

Explanation: This message is for the use case when an implementation has detected that the Memory Logging Limit has been Removed.

May also be shown as 816f050c200effff or 0x816f050c200effff

Severity: Info

Alert Category: Critical - Memory

Serviceable: No

CIM Information: **Prefix:** PLAT and **ID:** 0145

SNMP Trap ID: 41

Automatically notify Support: No

User response: This is a UEFI detected event. To find the UEFI diagnostic code for this event, in the information center, follow the instructions in "Finding the UEFI diagnostic code" under "UEFI diagnostic codes." Then, in the information center, open the topic for the UEFI diagnostic code and follow the instructions under "User response."

Related Links:

- "Finding the UEFI diagnostic code" on page 521

816f050c-200fffff Memory Logging Limit Removed for DIMM 15 on Subsystem [MemoryElementName].

Explanation: This message is for the use case when an implementation has detected that the Memory Logging Limit has been Removed.

May also be shown as 816f050c200fffff or 0x816f050c200fffff

Severity: Info

Alert Category: Critical - Memory

Serviceable: No

CIM Information: **Prefix:** PLAT and **ID:** 0145

SNMP Trap ID: 41

Automatically notify Support: No

User response: This is a UEFI detected event. To find the UEFI diagnostic code for this event, in the information center, follow the instructions in "Finding the UEFI diagnostic code" under "UEFI diagnostic codes." Then, in the information center, open the topic for the UEFI diagnostic code and follow the instructions under "User response."

Related Links:

- "Finding the UEFI diagnostic code" on page 521

816f050c-2010ffff Memory Logging Limit Removed for DIMM 16 on Subsystem [MemoryElementName].

Explanation: This message is for the use case when an implementation has detected that the Memory Logging Limit has been Removed.

May also be shown as 816f050c2010ffff or 0x816f050c2010ffff

Severity: Info

Alert Category: Critical - Memory

Serviceable: No

CIM Information: Prefix: PLAT and **ID:** 0145

SNMP Trap ID: 41

Automatically notify Support: No

User response: This is a UEFI detected event. To find the UEFI diagnostic code for this event, in the information center, follow the instructions in "Finding the UEFI diagnostic code" under "UEFI diagnostic codes." Then, in the information center, open the topic for the UEFI diagnostic code and follow the instructions under "User response."

Related Links:

- "Finding the UEFI diagnostic code" on page 521

816f050c-2011ffff Memory Logging Limit Removed for DIMM 17 on Subsystem [MemoryElementName].

Explanation: This message is for the use case when an implementation has detected that the Memory Logging Limit has been Removed.

May also be shown as 816f050c2011ffff or 0x816f050c2011ffff

Severity: Info

Alert Category: Critical - Memory

Serviceable: No

CIM Information: Prefix: PLAT and **ID:** 0145

SNMP Trap ID: 41

Automatically notify Support: No

User response: This is a UEFI detected event. To find the UEFI diagnostic code for this event, in the information center, follow the instructions in "Finding the UEFI diagnostic code" under "UEFI diagnostic codes." Then, in the information center, open the topic for the UEFI diagnostic code and follow the instructions under "User response."

Related Links:

- "Finding the UEFI diagnostic code" on page 521

816f050c-2012ffff Memory Logging Limit Removed for DIMM 18 on Subsystem [MemoryElementName].

Explanation: This message is for the use case when an implementation has detected that the Memory Logging Limit has been Removed.

May also be shown as 816f050c2012ffff or 0x816f050c2012ffff

Severity: Info

Alert Category: Critical - Memory

Serviceable: No

CIM Information: Prefix: PLAT and **ID:** 0145

SNMP Trap ID: 41

Automatically notify Support: No

User response: This is a UEFI detected event. To find the UEFI diagnostic code for this event, in the information

center, follow the instructions in "Finding the UEFI diagnostic code" under "UEFI diagnostic codes." Then, in the information center, open the topic for the UEFI diagnostic code and follow the instructions under "User response."

Related Links:

- "Finding the UEFI diagnostic code" on page 521

816f050c-2013ffff Memory Logging Limit Removed for DIMM 19 on Subsystem [MemoryElementName].

Explanation: This message is for the use case when an implementation has detected that the Memory Logging Limit has been Removed.

May also be shown as 816f050c2013ffff or 0x816f050c2013ffff

Severity: Info

Alert Category: Critical - Memory

Serviceable: No

CIM Information: Prefix: PLAT and **ID:** 0145

SNMP Trap ID: 41

Automatically notify Support: No

User response: This is a UEFI detected event. To find the UEFI diagnostic code for this event, in the information center, follow the instructions in "Finding the UEFI diagnostic code" under "UEFI diagnostic codes." Then, in the information center, open the topic for the UEFI diagnostic code and follow the instructions under "User response."

Related Links:

- "Finding the UEFI diagnostic code" on page 521

816f050c-2014ffff Memory Logging Limit Removed for DIMM 20 on Subsystem [MemoryElementName].

Explanation: This message is for the use case when an implementation has detected that the Memory Logging Limit has been Removed.

May also be shown as 816f050c2014ffff or 0x816f050c2014ffff

Severity: Info

Alert Category: Critical - Memory

Serviceable: No

CIM Information: Prefix: PLAT and **ID:** 0145

SNMP Trap ID: 41

Automatically notify Support: No

User response: This is a UEFI detected event. To find the UEFI diagnostic code for this event, in the information center, follow the instructions in "Finding the UEFI diagnostic code" under "UEFI diagnostic codes." Then, in the information center, open the topic for the UEFI diagnostic code and follow the instructions under "User response."

Related Links:

- "Finding the UEFI diagnostic code" on page 521

816f050c-2015ffff Memory Logging Limit Removed for DIMM 21 on Subsystem [MemoryElementName].

Explanation: This message is for the use case when an implementation has detected that the Memory Logging Limit has been Removed.

May also be shown as 816f050c2015ffff or 0x816f050c2015ffff

Severity: Info

Alert Category: Critical - Memory

Serviceable: No

CIM Information: **Prefix:** PLAT and **ID:** 0145

SNMP Trap ID: 41

Automatically notify Support: No

User response: This is a UEFI detected event. To find the UEFI diagnostic code for this event, in the information center, follow the instructions in "Finding the UEFI diagnostic code" under "UEFI diagnostic codes." Then, in the information center, open the topic for the UEFI diagnostic code and follow the instructions under "User response."

Related Links:

- "Finding the UEFI diagnostic code" on page 521

816f050c-2016ffff Memory Logging Limit Removed for DIMM 22 on Subsystem [MemoryElementName].

Explanation: This message is for the use case when an implementation has detected that the Memory Logging Limit has been Removed.

May also be shown as 816f050c2016ffff or 0x816f050c2016ffff

Severity: Info

Alert Category: Critical - Memory

Serviceable: No

CIM Information: **Prefix:** PLAT and **ID:** 0145

SNMP Trap ID: 41

Automatically notify Support: No

User response: This is a UEFI detected event. To find the UEFI diagnostic code for this event, in the information center, follow the instructions in "Finding the UEFI diagnostic code" under "UEFI diagnostic codes." Then, in the information center, open the topic for the UEFI diagnostic code and follow the instructions under "User response."

Related Links:

- "Finding the UEFI diagnostic code" on page 521

816f050c-2017ffff Memory Logging Limit Removed for DIMM 23 on Subsystem [MemoryElementName].

Explanation: This message is for the use case when an implementation has detected that the Memory Logging Limit has been Removed.

May also be shown as 816f050c2017ffff or 0x816f050c2017ffff

Severity: Info

Alert Category: Critical - Memory

Serviceable: No

CIM Information: **Prefix:** PLAT and **ID:** 0145

SNMP Trap ID: 41

Automatically notify Support: No

User response: This is a UEFI detected event. To find the UEFI diagnostic code for this event, in the information center, follow the instructions in "Finding the UEFI diagnostic code" under "UEFI diagnostic codes." Then, in the information center, open the topic for the UEFI diagnostic code and follow the instructions under "User response."

Related Links:

- "Finding the UEFI diagnostic code" on page 521

816f050c-2018ffff Memory Logging Limit Removed for DIMM 24 on Subsystem [MemoryElementName].

Explanation: This message is for the use case when an implementation has detected that the Memory Logging Limit has been Removed.

May also be shown as 816f050c2018ffff or 0x816f050c2018ffff

Severity: Info

Alert Category: Critical - Memory

Serviceable: No

CIM Information: Prefix: PLAT and **ID:** 0145

SNMP Trap ID: 41

Automatically notify Support: No

User response: This is a UEFI detected event. To find the UEFI diagnostic code for this event, in the information center, follow the instructions in "Finding the UEFI diagnostic code" under "UEFI diagnostic codes." Then, in the information center, open the topic for the UEFI diagnostic code and follow the instructions under "User response."

Related Links:

- “Finding the UEFI diagnostic code” on page 521

816f050c-2581ffff Memory Logging Limit Removed for [PhysicalMemoryElementName] on Subsystem [MemoryElementName].

Explanation: This message is for the use case when an implementation has detected that the Memory Logging Limit has been Removed. All DIMMs. One of the DIMMs.

May also be shown as 816f050c2581ffff or 0x816f050c2581ffff

Severity: Info

Alert Category: Critical - Memory

Serviceable: No

CIM Information: Prefix: PLAT and **ID:** 0145

SNMP Trap ID: 41

Automatically notify Support: No

User response: This is a UEFI detected event. To find the UEFI diagnostic code for this event, in the information center, follow the instructions in "Finding the UEFI diagnostic code" under "UEFI diagnostic codes." Then, in the information center, open the topic for the UEFI diagnostic code and follow the instructions under "User response."

Related Links:

- “Finding the UEFI diagnostic code” on page 521

816f050d-0400ffff Critical Array [ComputerSystemElementName] has deasserted.

Explanation: The RAID array is no longer in a critical condition.

May also be shown as 816f050d0400ffff or 0x816f050d0400ffff

Severity: Info

Alert Category: Critical - Hard Disk drive

Serviceable: No

CIM Information: Prefix: PLAT and **ID:** 0175

SNMP Trap ID: 5

Automatically notify Support: No

User response: Information only; no action is required.

816f050d-0401ffff Critical Array [ComputerSystemElementName] has deasserted.

Explanation: The RAID array is no longer in a critical condition.

May also be shown as 816f050d0401ffff or 0x816f050d0401ffff

Severity: Info

Alert Category: Critical - Hard Disk drive

Serviceable: No

CIM Information: Prefix: PLAT and **ID:** 0175

SNMP Trap ID: 5

Automatically notify Support: No

User response: Information only; no action is required.

816f050d-0402ffff Critical Array [ComputerSystemElementName] has deasserted.

Explanation: The RAID array is no longer in a critical condition.

May also be shown as 816f050d0402ffff or 0x816f050d0402ffff

Severity: Info

Alert Category: Critical - Hard Disk drive

Serviceable: No

CIM Information: Prefix: PLAT and **ID:** 0175

SNMP Trap ID: 5

Automatically notify Support: No

User response: Information only; no action is required.

816f050d-0403ffff Critical Array [ComputerSystemElementName] has deasserted.

Explanation: The RAID array is no longer in a critical condition.

May also be shown as 816f050d0403ffff or 0x816f050d0403ffff

Severity: Info

Alert Category: Critical - Hard Disk drive

Serviceable: No

CIM Information: Prefix: PLAT and **ID:** 0175

SNMP Trap ID: 5

Automatically notify Support: No

User response: Information only; no action is required.

816f050d-0404ffff Critical Array [ComputerSystemElementName] has deasserted.

Explanation: The RAID array is no longer in a critical condition.

May also be shown as 816f050d0404ffff or 0x816f050d0404ffff

Severity: Info

Alert Category: Critical - Hard Disk drive

Serviceable: No

CIM Information: Prefix: PLAT and **ID:** 0175

SNMP Trap ID: 5

Automatically notify Support: No

User response: Information only; no action is required.

816f050d-0405ffff Critical Array [ComputerSystemElementName] has deasserted.

Explanation: The RAID array is no longer in a critical condition.

May also be shown as 816f050d0405ffff or 0x816f050d0405ffff

Severity: Info

Alert Category: Critical - Hard Disk drive

Serviceable: No

CIM Information: Prefix: PLAT and **ID:** 0175

SNMP Trap ID: 5

Automatically notify Support: No

User response: Information only; no action is required.

816f050d-0406ffff Critical Array [ComputerSystemElementName] has deasserted.

Explanation: The RAID array is no longer in a critical condition.

May also be shown as 816f050d0406ffff or 0x816f050d0406ffff

Severity: Info

Alert Category: Critical - Hard Disk drive

Serviceable: No

CIM Information: Prefix: PLAT and **ID:** 0175

SNMP Trap ID: 5

Automatically notify Support: No

User response: Information only; no action is required.

816f050d-0407ffff Critical Array [ComputerSystemElementName] has deasserted.

Explanation: The RAID array is no longer in a critical condition.

May also be shown as 816f050d0407ffff or 0x816f050d0407ffff

Severity: Info

Alert Category: Critical - Hard Disk drive

Serviceable: No

CIM Information: Prefix: PLAT and **ID:** 0175

SNMP Trap ID: 5

Automatically notify Support: No

User response: Information only; no action is required.

816f0513-2582ffff A PCI SERR on system [ComputerSystemElementName] has deasserted.

Explanation: This message is for the use case when an implementation has detected a PCI SERR deassertion. PCIs.

May also be shown as 816f05132582ffff or 0x816f05132582ffff

Severity: Info

Alert Category: Critical - Other

Serviceable: No

CIM Information: **Prefix:** PLAT and **ID:** 0235

SNMP Trap ID: 50

Automatically notify Support: No

User response: This is a UEFI detected event. To find the UEFI diagnostic code for this event, in the information center, follow the instructions in "Finding the UEFI diagnostic code" under "UEFI diagnostic codes." Then, in the information center, open the topic for the UEFI diagnostic code and follow the instructions under "User response."

Related Links:

- "Finding the UEFI diagnostic code" on page 521

816f0513-2c03ffff A PCI SERR on system [ComputerSystemElementName] has deasserted.

Explanation: A PCI system error is no longer detected in the I/O expansion adapter in PCIe adapter slot 3 in the PCI expansion unit.

May also be shown as 816f05132c03ffff or 0x816f05132c03ffff

Severity: Info

Alert Category: Critical - Other

Serviceable: No

CIM Information: **Prefix:** PLAT and **ID:** 0235

SNMP Trap ID: 50

Automatically notify Support: No

User response: Information only; no action is required.

816f0513-2c04ffff A PCI SERR on system [ComputerSystemElementName] has deasserted.

Explanation: A PCI system error is no longer detected in the I/O expansion adapter in PCIe adapter slot 4 in the PCI expansion unit.

May also be shown as 816f05132c04ffff or 0x816f05132c04ffff

Severity: Info

Alert Category: Critical - Other

Serviceable: No

CIM Information: **Prefix:** PLAT and **ID:** 0235

SNMP Trap ID: 50

Automatically notify Support: No

User response: Information only; no action is required.

816f0513-3101ffff A PCI SERR on system [ComputerSystemElementName] has deasserted.

Explanation: A PCI system error is no longer detected in the I/O expansion adapter in PCIe adapter slot 1 in the PCI expansion unit.

May also be shown as 816f05133101ffff or 0x816f05133101ffff

Severity: Info

Alert Category: Critical - Other

Serviceable: No

CIM Information: **Prefix:** PLAT and **ID:** 0235

SNMP Trap ID: 50

Automatically notify Support: No

User response: Information only; no action is required.

816f0513-3102ffff A PCI SERR on system [ComputerSystemElementName] has deasserted.

Explanation: A PCI system error is no longer detected in the I/O expansion adapter in PCIe adapter slot 2 in the PCI expansion unit.

May also be shown as 816f05133102ffff or 0x816f05133102ffff

Severity: Info

Alert Category: Critical - Other

Serviceable: No

CIM Information: Prefix: PLAT and **ID:** 0235

SNMP Trap ID: 50

Automatically notify Support: No

User response: Information only; no action is required.

816f0513-3103ffff A PCI SERR on system [ComputerSystemElementName] has deasserted.

Explanation: A PCI system error is no longer detected in the I/O expansion adapter in PCIe adapter slot 3 in the PCI expansion unit.

May also be shown as 816f05133103ffff or 0x816f05133103ffff

Severity: Info

Alert Category: Critical - Other

Serviceable: No

CIM Information: Prefix: PLAT and **ID:** 0235

SNMP Trap ID: 50

Automatically notify Support: No

User response: Information only; no action is required.

816f0513-3104ffff A PCI SERR on system [ComputerSystemElementName] has deasserted.

Explanation: A PCI system error is no longer detected in the I/O expansion adapter in PCIe adapter slot 4 in the PCI expansion unit.

May also be shown as 816f05133104ffff or 0x816f05133104ffff

Severity: Info

Alert Category: Critical - Other

Serviceable: No

CIM Information: Prefix: PLAT and **ID:** 0235

SNMP Trap ID: 50

Automatically notify Support: No

User response: Information only; no action is required.

816f0607-0301ffff An SM BIOS Uncorrectable CPU complex error for CPU 1 has deasserted.

Explanation: This message is for the use case when an SM BIOS Uncorrectable CPU complex error has deasserted.

May also be shown as 816f06070301ffff or 0x816f06070301ffff

Severity: Info

Alert Category: Critical - CPU

Serviceable: No

CIM Information: Prefix: PLAT and **ID:** 0817

SNMP Trap ID: 40

Automatically notify Support: No

User response: This is a UEFI detected event. To find the UEFI diagnostic code for this event, in the information center, follow the instructions in "Finding the UEFI diagnostic code" under "UEFI diagnostic codes." Then, in the information center, open the topic for the UEFI diagnostic code and follow the instructions under "User response."

Related Links:

- “Finding the UEFI diagnostic code” on page 521

816f0607-0302ffff An SM BIOS Uncorrectable CPU complex error for CPU 2 has deasserted.

Explanation: This message is for the use case when an SM BIOS Uncorrectable CPU complex error has deasserted.

May also be shown as 816f06070302ffff or 0x816f06070302ffff

Severity: Info

Alert Category: Critical - CPU

Serviceable: No

CIM Information: Prefix: PLAT and **ID:** 0817

SNMP Trap ID: 40

Automatically notify Support: No

User response: This is a UEFI detected event. To find the UEFI diagnostic code for this event, in the information center, follow the instructions in "Finding the UEFI diagnostic code" under "UEFI diagnostic codes." Then, in the information center, open the topic for the UEFI diagnostic code and follow the instructions under "User response."

Related Links:

- “Finding the UEFI diagnostic code” on page 521

816f0607-2584ffff An SM BIOS Uncorrectable CPU complex error for [ProcessorElementName] has deasserted.

Explanation: This message is for the use case when an SM BIOS Uncorrectable CPU complex error has deasserted. (It might be All CPUs or One of CPUs as well)

May also be shown as 816f06072584ffff or 0x816f06072584ffff

Severity: Info

Alert Category: Critical - CPU

Serviceable: No

CIM Information: Prefix: PLAT and **ID:** 0817

SNMP Trap ID: 40

Automatically notify Support: No

User response: This is a UEFI detected event. To find the UEFI diagnostic code for this event, in the information center, follow the instructions in "Finding the UEFI diagnostic code" under "UEFI diagnostic codes." Then, in the information center, open the topic for the UEFI diagnostic code and follow the instructions under "User response."

Related Links:

- "Finding the UEFI diagnostic code" on page 521

816f060d-0400ffff Array in system [ComputerSystemElementName] has been restored.

Explanation: The failed RAID array has been restored.

May also be shown as 816f060d0400ffff or 0x816f060d0400ffff

Severity: Info

Alert Category: Critical - Hard Disk drive

Serviceable: No

CIM Information: Prefix: PLAT and **ID:** 0177

SNMP Trap ID: 5

Automatically notify Support: No

User response: Information only; no action is required.

816f060d-0401ffff Array in system [ComputerSystemElementName] has been restored.

Explanation: The failed RAID array has been restored.

May also be shown as 816f060d0401ffff or 0x816f060d0401ffff

Severity: Info

Alert Category: Critical - Hard Disk drive

Serviceable: No

CIM Information: Prefix: PLAT and **ID:** 0177

SNMP Trap ID: 5

Automatically notify Support: No

User response: Information only; no action is required.

816f060d-0402ffff Array in system [ComputerSystemElementName] has been restored.

Explanation: The failed RAID array has been restored.

May also be shown as 816f060d0402ffff or 0x816f060d0402ffff

Severity: Info

Alert Category: Critical - Hard Disk drive

Serviceable: No

CIM Information: Prefix: PLAT and **ID:** 0177

SNMP Trap ID: 5

Automatically notify Support: No

User response: Information only; no action is required.

816f060d-0403ffff Array in system [ComputerSystemElementName] has been restored.

Explanation: The failed RAID array has been restored.

May also be shown as 816f060d0403ffff or 0x816f060d0403ffff

Severity: Info

Alert Category: Critical - Hard Disk drive

Serviceable: No

CIM Information: **Prefix:** PLAT and **ID:** 0177

SNMP Trap ID: 5

Automatically notify Support: No

User response: Information only; no action is required.

816f060d-0404ffff Array in system [ComputerSystemElementName] has been restored.

Explanation: The failed RAID array has been restored.

May also be shown as 816f060d0404ffff or 0x816f060d0404ffff

Severity: Info

Alert Category: Critical - Hard Disk drive

Serviceable: No

CIM Information: **Prefix:** PLAT and **ID:** 0177

SNMP Trap ID: 5

Automatically notify Support: No

User response: Information only; no action is required.

816f060d-0405ffff Array in system [ComputerSystemElementName] has been restored.

Explanation: The failed RAID array has been restored.

May also be shown as 816f060d0405ffff or 0x816f060d0405ffff

Severity: Info

Alert Category: Critical - Hard Disk drive

Serviceable: No

CIM Information: **Prefix:** PLAT and **ID:** 0177

SNMP Trap ID: 5

Automatically notify Support: No

User response: Information only; no action is required.

816f060d-0406ffff Array in system [ComputerSystemElementName] has been restored.

Explanation: The failed RAID array has been restored.

May also be shown as 816f060d0406ffff or 0x816f060d0406ffff

Severity: Info

Alert Category: Critical - Hard Disk drive

Serviceable: No

CIM Information: **Prefix:** PLAT and **ID:** 0177

SNMP Trap ID: 5

Automatically notify Support: No

User response: Information only; no action is required.

816f060d-0407ffff Array in system [ComputerSystemElementName] has been restored.

Explanation: The failed RAID array has been restored.

May also be shown as 816f060d0407ffff or 0x816f060d0407ffff

Severity: Info

Alert Category: Critical - Hard Disk drive

Serviceable: No

CIM Information: Prefix: PLAT and **ID:** 0177

SNMP Trap ID: 5

Automatically notify Support: No

User response: Information only; no action is required.

816f070c-2001ffff Configuration error for DIMM 1 on Subsystem [MemoryElementName]has deasserted.

Explanation: This message is for the use case when an implementation has detected a Memory DIMM configuration error has deasserted.

May also be shown as 816f070c2001ffff or 0x816f070c2001ffff

Severity: Info

Alert Category: Critical - Memory

Serviceable: No

CIM Information: Prefix: PLAT and **ID:** 0127

SNMP Trap ID: 41

Automatically notify Support: No

User response: This is a UEFI detected event. To find the UEFI diagnostic code for this event, in the information center, follow the instructions in "Finding the UEFI diagnostic code" under "UEFI diagnostic codes." Then, in the information center, open the topic for the UEFI diagnostic code and follow the instructions under "User response."

Related Links:

- “Finding the UEFI diagnostic code” on page 521

816f070c-2002ffff Configuration error for DIMM 2 on Subsystem [MemoryElementName]has deasserted.

Explanation: This message is for the use case when an implementation has detected a Memory DIMM configuration error has deasserted.

May also be shown as 816f070c2002ffff or 0x816f070c2002ffff

Severity: Info

Alert Category: Critical - Memory

Serviceable: No

CIM Information: Prefix: PLAT and **ID:** 0127

SNMP Trap ID: 41

Automatically notify Support: No

User response: This is a UEFI detected event. To find the UEFI diagnostic code for this event, in the information center, follow the instructions in "Finding the UEFI diagnostic code" under "UEFI diagnostic codes." Then, in the information center, open the topic for the UEFI diagnostic code and follow the instructions under "User response."

Related Links:

- “Finding the UEFI diagnostic code” on page 521

816f070c-2003ffff Configuration error for DIMM 3 on Subsystem [MemoryElementName]has deasserted.

Explanation: This message is for the use case when an implementation has detected a Memory DIMM configuration error has deasserted.

May also be shown as 816f070c2003ffff or 0x816f070c2003ffff

Severity: Info

Alert Category: Critical - Memory

Serviceable: No

CIM Information: Prefix: PLAT and **ID:** 0127

SNMP Trap ID: 41

Automatically notify Support: No

User response: This is a UEFI detected event. To find the UEFI diagnostic code for this event, in the information center, follow the instructions in "Finding the UEFI diagnostic code" under "UEFI diagnostic codes." Then, in the information center, open the topic for the UEFI diagnostic code and follow the instructions under "User response."

Related Links:

- "Finding the UEFI diagnostic code" on page 521

816f070c-2004ffff Configuration error for DIMM 4 on Subsystem [MemoryElementName]has deasserted.

Explanation: This message is for the use case when an implementation has detected a Memory DIMM configuration error has deasserted.

May also be shown as 816f070c2004ffff or 0x816f070c2004ffff

Severity: Info

Alert Category: Critical - Memory

Serviceable: No

CIM Information: Prefix: PLAT and **ID:** 0127

SNMP Trap ID: 41

Automatically notify Support: No

User response: This is a UEFI detected event. To find the UEFI diagnostic code for this event, in the information center, follow the instructions in "Finding the UEFI diagnostic code" under "UEFI diagnostic codes." Then, in the information center, open the topic for the UEFI diagnostic code and follow the instructions under "User response."

Related Links:

- "Finding the UEFI diagnostic code" on page 521

816f070c-2005ffff Configuration error for DIMM 5 on Subsystem [MemoryElementName]has deasserted.

Explanation: This message is for the use case when an implementation has detected a Memory DIMM configuration error has deasserted.

May also be shown as 816f070c2005ffff or 0x816f070c2005ffff

Severity: Info

Alert Category: Critical - Memory

Serviceable: No

CIM Information: Prefix: PLAT and **ID:** 0127

SNMP Trap ID: 41

Automatically notify Support: No

User response: This is a UEFI detected event. To find the UEFI diagnostic code for this event, in the information

center, follow the instructions in "Finding the UEFI diagnostic code" under "UEFI diagnostic codes." Then, in the information center, open the topic for the UEFI diagnostic code and follow the instructions under "User response."

Related Links:

- "Finding the UEFI diagnostic code" on page 521

816f070c-2006ffff Configuration error for DIMM 6 on Subsystem [MemoryElementName]has deasserted.

Explanation: This message is for the use case when an implementation has detected a Memory DIMM configuration error has deasserted.

May also be shown as 816f070c2006ffff or 0x816f070c2006ffff

Severity: Info

Alert Category: Critical - Memory

Serviceable: No

CIM Information: Prefix: PLAT and **ID:** 0127

SNMP Trap ID: 41

Automatically notify Support: No

User response: This is a UEFI detected event. To find the UEFI diagnostic code for this event, in the information center, follow the instructions in "Finding the UEFI diagnostic code" under "UEFI diagnostic codes." Then, in the information center, open the topic for the UEFI diagnostic code and follow the instructions under "User response."

Related Links:

- "Finding the UEFI diagnostic code" on page 521

816f070c-2007ffff Configuration error for DIMM 7 on Subsystem [MemoryElementName]has deasserted.

Explanation: This message is for the use case when an implementation has detected a Memory DIMM configuration error has deasserted.

May also be shown as 816f070c2007ffff or 0x816f070c2007ffff

Severity: Info

Alert Category: Critical - Memory

Serviceable: No

CIM Information: Prefix: PLAT and **ID:** 0127

SNMP Trap ID: 41

Automatically notify Support: No

User response: This is a UEFI detected event. To find the UEFI diagnostic code for this event, in the information center, follow the instructions in "Finding the UEFI diagnostic code" under "UEFI diagnostic codes." Then, in the information center, open the topic for the UEFI diagnostic code and follow the instructions under "User response."

Related Links:

- "Finding the UEFI diagnostic code" on page 521

816f070c-2008ffff Configuration error for DIMM 8 on Subsystem [MemoryElementName]has deasserted.

Explanation: This message is for the use case when an implementation has detected a Memory DIMM configuration error has deasserted.

May also be shown as 816f070c2008ffff or 0x816f070c2008ffff

Severity: Info

Alert Category: Critical - Memory

Serviceable: No

CIM Information: **Prefix:** PLAT and **ID:** 0127

SNMP Trap ID: 41

Automatically notify Support: No

User response: This is a UEFI detected event. To find the UEFI diagnostic code for this event, in the information center, follow the instructions in "Finding the UEFI diagnostic code" under "UEFI diagnostic codes." Then, in the information center, open the topic for the UEFI diagnostic code and follow the instructions under "User response."

Related Links:

- “Finding the UEFI diagnostic code” on page 521

816f070c-2009ffff Configuration error for DIMM 9 on Subsystem [MemoryElementName]has deasserted.

Explanation: This message is for the use case when an implementation has detected a Memory DIMM configuration error has deasserted.

May also be shown as 816f070c2009ffff or 0x816f070c2009ffff

Severity: Info

Alert Category: Critical - Memory

Serviceable: No

CIM Information: **Prefix:** PLAT and **ID:** 0127

SNMP Trap ID: 41

Automatically notify Support: No

User response: This is a UEFI detected event. To find the UEFI diagnostic code for this event, in the information center, follow the instructions in "Finding the UEFI diagnostic code" under "UEFI diagnostic codes." Then, in the information center, open the topic for the UEFI diagnostic code and follow the instructions under "User response."

Related Links:

- “Finding the UEFI diagnostic code” on page 521

816f070c-200affff Configuration error for DIMM 10 on Subsystem [MemoryElementName]has deasserted.

Explanation: This message is for the use case when an implementation has detected a Memory DIMM configuration error has deasserted.

May also be shown as 816f070c200affff or 0x816f070c200affff

Severity: Info

Alert Category: Critical - Memory

Serviceable: No

CIM Information: **Prefix:** PLAT and **ID:** 0127

SNMP Trap ID: 41

Automatically notify Support: No

User response: This is a UEFI detected event. To find the UEFI diagnostic code for this event, in the information center, follow the instructions in "Finding the UEFI diagnostic code" under "UEFI diagnostic codes." Then, in the information center, open the topic for the UEFI diagnostic code and follow the instructions under "User response."

Related Links:

- “Finding the UEFI diagnostic code” on page 521

816f070c-200bffff Configuration error for DIMM 11 on Subsystem [MemoryElementName]has deasserted.

Explanation: This message is for the use case when an implementation has detected a Memory DIMM configuration error has deasserted.

May also be shown as 816f070c200bffff or 0x816f070c200bffff

Severity: Info

Alert Category: Critical - Memory

Serviceable: No

CIM Information: Prefix: PLAT and **ID:** 0127

SNMP Trap ID: 41

Automatically notify Support: No

User response: This is a UEFI detected event. To find the UEFI diagnostic code for this event, in the information center, follow the instructions in "Finding the UEFI diagnostic code" under "UEFI diagnostic codes." Then, in the information center, open the topic for the UEFI diagnostic code and follow the instructions under "User response."

Related Links:

- “Finding the UEFI diagnostic code” on page 521

816f070c-200cffff Configuration error for DIMM 12 on Subsystem [MemoryElementName]has deasserted.

Explanation: This message is for the use case when an implementation has detected a Memory DIMM configuration error has deasserted.

May also be shown as 816f070c200cffff or 0x816f070c200cffff

Severity: Info

Alert Category: Critical - Memory

Serviceable: No

CIM Information: Prefix: PLAT and **ID:** 0127

SNMP Trap ID: 41

Automatically notify Support: No

User response: This is a UEFI detected event. To find the UEFI diagnostic code for this event, in the information center, follow the instructions in "Finding the UEFI diagnostic code" under "UEFI diagnostic codes." Then, in the information center, open the topic for the UEFI diagnostic code and follow the instructions under "User response."

Related Links:

- “Finding the UEFI diagnostic code” on page 521

816f070c-200dffff Configuration error for DIMM 13 on Subsystem [MemoryElementName]has deasserted.

Explanation: This message is for the use case when an implementation has detected a Memory DIMM configuration error has deasserted.

May also be shown as 816f070c200dffff or 0x816f070c200dffff

Severity: Info

Alert Category: Critical - Memory

Serviceable: No

CIM Information: Prefix: PLAT and **ID:** 0127

SNMP Trap ID: 41

Automatically notify Support: No

User response: This is a UEFI detected event. To find the UEFI diagnostic code for this event, in the information

center, follow the instructions in "Finding the UEFI diagnostic code" under "UEFI diagnostic codes." Then, in the information center, open the topic for the UEFI diagnostic code and follow the instructions under "User response."

Related Links:

- "Finding the UEFI diagnostic code" on page 521

816f070c-200effff Configuration error for DIMM 14 on Subsystem [MemoryElementName]has deasserted.

Explanation: This message is for the use case when an implementation has detected a Memory DIMM configuration error has deasserted.

May also be shown as 816f070c200effff or 0x816f070c200effff

Severity: Info

Alert Category: Critical - Memory

Serviceable: No

CIM Information: Prefix: PLAT and **ID:** 0127

SNMP Trap ID: 41

Automatically notify Support: No

User response: This is a UEFI detected event. To find the UEFI diagnostic code for this event, in the information center, follow the instructions in "Finding the UEFI diagnostic code" under "UEFI diagnostic codes." Then, in the information center, open the topic for the UEFI diagnostic code and follow the instructions under "User response."

Related Links:

- "Finding the UEFI diagnostic code" on page 521

816f070c-200fffff Configuration error for DIMM 15 on Subsystem [MemoryElementName]has deasserted.

Explanation: This message is for the use case when an implementation has detected a Memory DIMM configuration error has deasserted.

May also be shown as 816f070c200fffff or 0x816f070c200fffff

Severity: Info

Alert Category: Critical - Memory

Serviceable: No

CIM Information: Prefix: PLAT and **ID:** 0127

SNMP Trap ID: 41

Automatically notify Support: No

User response: This is a UEFI detected event. To find the UEFI diagnostic code for this event, in the information center, follow the instructions in "Finding the UEFI diagnostic code" under "UEFI diagnostic codes." Then, in the information center, open the topic for the UEFI diagnostic code and follow the instructions under "User response."

Related Links:

- "Finding the UEFI diagnostic code" on page 521

816f070c-2010ffff Configuration error for DIMM 16 on Subsystem [MemoryElementName]has deasserted.

Explanation: This message is for the use case when an implementation has detected a Memory DIMM configuration error has deasserted.

May also be shown as 816f070c2010ffff or 0x816f070c2010ffff

Severity: Info

Alert Category: Critical - Memory

Serviceable: No

CIM Information: Prefix: PLAT and **ID:** 0127

SNMP Trap ID: 41

Automatically notify Support: No

User response: This is a UEFI detected event. To find the UEFI diagnostic code for this event, in the information center, follow the instructions in "Finding the UEFI diagnostic code" under "UEFI diagnostic codes." Then, in the information center, open the topic for the UEFI diagnostic code and follow the instructions under "User response."

Related Links:

- "Finding the UEFI diagnostic code" on page 521

816f070c-2011ffff Configuration error for DIMM 17 on Subsystem [MemoryElementName]has deasserted.

Explanation: This message is for the use case when an implementation has detected a Memory DIMM configuration error has deasserted.

May also be shown as 816f070c2011ffff or 0x816f070c2011ffff

Severity: Info

Alert Category: Critical - Memory

Serviceable: No

CIM Information: Prefix: PLAT and **ID:** 0127

SNMP Trap ID: 41

Automatically notify Support: No

User response: This is a UEFI detected event. To find the UEFI diagnostic code for this event, in the information center, follow the instructions in "Finding the UEFI diagnostic code" under "UEFI diagnostic codes." Then, in the information center, open the topic for the UEFI diagnostic code and follow the instructions under "User response."

Related Links:

- "Finding the UEFI diagnostic code" on page 521

816f070c-2012ffff Configuration error for DIMM 18 on Subsystem [MemoryElementName]has deasserted.

Explanation: This message is for the use case when an implementation has detected a Memory DIMM configuration error has deasserted.

May also be shown as 816f070c2012ffff or 0x816f070c2012ffff

Severity: Info

Alert Category: Critical - Memory

Serviceable: No

CIM Information: Prefix: PLAT and **ID:** 0127

SNMP Trap ID: 41

Automatically notify Support: No

User response: This is a UEFI detected event. To find the UEFI diagnostic code for this event, in the information center, follow the instructions in "Finding the UEFI diagnostic code" under "UEFI diagnostic codes." Then, in the information center, open the topic for the UEFI diagnostic code and follow the instructions under "User response."

Related Links:

- "Finding the UEFI diagnostic code" on page 521

816f070c-2013ffff Configuration error for DIMM 19 on Subsystem [MemoryElementName]has deasserted.

Explanation: This message is for the use case when an implementation has detected a Memory DIMM configuration error has deasserted.

May also be shown as 816f070c2013ffff or 0x816f070c2013ffff

Severity: Info

Alert Category: Critical - Memory

Serviceable: No

CIM Information: Prefix: PLAT and **ID:** 0127

SNMP Trap ID: 41

Automatically notify Support: No

User response: This is a UEFI detected event. To find the UEFI diagnostic code for this event, in the information center, follow the instructions in "Finding the UEFI diagnostic code" under "UEFI diagnostic codes." Then, in the information center, open the topic for the UEFI diagnostic code and follow the instructions under "User response."

Related Links:

- "Finding the UEFI diagnostic code" on page 521

816f070c-2014ffff Configuration error for DIMM 20 on Subsystem [MemoryElementName]has deasserted.

Explanation: This message is for the use case when an implementation has detected a Memory DIMM configuration error has deasserted.

May also be shown as 816f070c2014ffff or 0x816f070c2014ffff

Severity: Info

Alert Category: Critical - Memory

Serviceable: No

CIM Information: Prefix: PLAT and **ID:** 0127

SNMP Trap ID: 41

Automatically notify Support: No

User response: This is a UEFI detected event. To find the UEFI diagnostic code for this event, in the information center, follow the instructions in "Finding the UEFI diagnostic code" under "UEFI diagnostic codes." Then, in the information center, open the topic for the UEFI diagnostic code and follow the instructions under "User response."

Related Links:

- "Finding the UEFI diagnostic code" on page 521

816f070c-2015ffff Configuration error for DIMM 21 on Subsystem [MemoryElementName]has deasserted.

Explanation: This message is for the use case when an implementation has detected a Memory DIMM configuration error has deasserted.

May also be shown as 816f070c2015ffff or 0x816f070c2015ffff

Severity: Info

Alert Category: Critical - Memory

Serviceable: No

CIM Information: Prefix: PLAT and **ID:** 0127

SNMP Trap ID: 41

Automatically notify Support: No

User response: This is a UEFI detected event. To find the UEFI diagnostic code for this event, in the information

center, follow the instructions in "Finding the UEFI diagnostic code" under "UEFI diagnostic codes." Then, in the information center, open the topic for the UEFI diagnostic code and follow the instructions under "User response."

Related Links:

- "Finding the UEFI diagnostic code" on page 521

816f070c-2016ffff Configuration error for DIMM 22 on Subsystem [MemoryElementName]has deasserted.

Explanation: This message is for the use case when an implementation has detected a Memory DIMM configuration error has deasserted.

May also be shown as 816f070c2016ffff or 0x816f070c2016ffff

Severity: Info

Alert Category: Critical - Memory

Serviceable: No

CIM Information: Prefix: PLAT and **ID:** 0127

SNMP Trap ID: 41

Automatically notify Support: No

User response: This is a UEFI detected event. To find the UEFI diagnostic code for this event, in the information center, follow the instructions in "Finding the UEFI diagnostic code" under "UEFI diagnostic codes." Then, in the information center, open the topic for the UEFI diagnostic code and follow the instructions under "User response."

Related Links:

- "Finding the UEFI diagnostic code" on page 521

816f070c-2017ffff Configuration error for DIMM 23 on Subsystem [MemoryElementName]has deasserted.

Explanation: This message is for the use case when an implementation has detected a Memory DIMM configuration error has deasserted.

May also be shown as 816f070c2017ffff or 0x816f070c2017ffff

Severity: Info

Alert Category: Critical - Memory

Serviceable: No

CIM Information: Prefix: PLAT and **ID:** 0127

SNMP Trap ID: 41

Automatically notify Support: No

User response: This is a UEFI detected event. To find the UEFI diagnostic code for this event, in the information center, follow the instructions in "Finding the UEFI diagnostic code" under "UEFI diagnostic codes." Then, in the information center, open the topic for the UEFI diagnostic code and follow the instructions under "User response."

Related Links:

- "Finding the UEFI diagnostic code" on page 521

816f070c-2018ffff Configuration error for DIMM 24 on Subsystem [MemoryElementName]has deasserted.

Explanation: This message is for the use case when an implementation has detected a Memory DIMM configuration error has deasserted.

May also be shown as 816f070c2018ffff or 0x816f070c2018ffff

Severity: Info

Alert Category: Critical - Memory

Serviceable: No

CIM Information: **Prefix:** PLAT and **ID:** 0127

SNMP Trap ID: 41

Automatically notify Support: No

User response: This is a UEFI detected event. To find the UEFI diagnostic code for this event, in the information center, follow the instructions in "Finding the UEFI diagnostic code" under "UEFI diagnostic codes." Then, in the information center, open the topic for the UEFI diagnostic code and follow the instructions under "User response."

Related Links:

- "Finding the UEFI diagnostic code" on page 521

816f070c-2581ffff Configuration error for [PhysicalMemoryElementName] on Subsystem [MemoryElementName]has deasserted.

Explanation: This message is for the use case when an implementation has detected a Memory DIMM configuration error has deasserted. All DIMMs. One of the DIMMs.

May also be shown as 816f070c2581ffff or 0x816f070c2581ffff

Severity: Info

Alert Category: Critical - Memory

Serviceable: No

CIM Information: **Prefix:** PLAT and **ID:** 0127

SNMP Trap ID: 41

Automatically notify Support: No

User response: This is a UEFI detected event. To find the UEFI diagnostic code for this event, in the information center, follow the instructions in "Finding the UEFI diagnostic code" under "UEFI diagnostic codes." Then, in the information center, open the topic for the UEFI diagnostic code and follow the instructions under "User response."

Related Links:

- "Finding the UEFI diagnostic code" on page 521

816f070d-0400ffff Rebuild completed for Array in system [ComputerSystemElementName].

Explanation: The rebuild of the RAID array is complete.

May also be shown as 816f070d0400ffff or 0x816f070d0400ffff

Severity: Info

Alert Category: System - Other

Serviceable: No

CIM Information: **Prefix:** PLAT and **ID:** 0179

SNMP Trap ID:

Automatically notify Support: No

User response: Information only; no action is required.

816f070d-0401ffff Rebuild completed for Array in system [ComputerSystemElementName].

Explanation: The rebuild of the RAID array is complete.

May also be shown as 816f070d0401ffff or 0x816f070d0401ffff

Severity: Info

Alert Category: System - Other

Serviceable: No

CIM Information: **Prefix:** PLAT and **ID:** 0179

SNMP Trap ID:

Automatically notify Support: No

User response: Information only; no action is required.

816f070d-0402ffff Rebuild completed for Array in system [ComputerSystemElementName].

Explanation: The rebuild of the RAID array is complete.

May also be shown as 816f070d0402ffff or 0x816f070d0402ffff

Severity: Info

Alert Category: System - Other

Serviceable: No

CIM Information: **Prefix:** PLAT and **ID:** 0179

SNMP Trap ID:

Automatically notify Support: No

User response: Information only; no action is required.

816f070d-0403ffff Rebuild completed for Array in system [ComputerSystemElementName].

Explanation: The rebuild of the RAID array is complete.

May also be shown as 816f070d0403ffff or 0x816f070d0403ffff

Severity: Info

Alert Category: System - Other

Serviceable: No

CIM Information: **Prefix:** PLAT and **ID:** 0179

SNMP Trap ID:

Automatically notify Support: No

User response: Information only; no action is required.

816f070d-0404ffff Rebuild completed for Array in system [ComputerSystemElementName].

Explanation: The rebuild of the RAID array is complete.

May also be shown as 816f070d0404ffff or 0x816f070d0404ffff

Severity: Info

Alert Category: System - Other

Serviceable: No

CIM Information: **Prefix:** PLAT and **ID:** 0179

SNMP Trap ID:

Automatically notify Support: No

User response: Information only; no action is required.

816f070d-0405ffff Rebuild completed for Array in system [ComputerSystemElementName].

Explanation: The rebuild of the RAID array is complete.

May also be shown as 816f070d0405ffff or 0x816f070d0405ffff

Severity: Info

Alert Category: System - Other

Serviceable: No

CIM Information: Prefix: PLAT and **ID:** 0179

SNMP Trap ID:

Automatically notify Support: No

User response: Information only; no action is required.

816f070d-0406ffff Rebuild completed for Array in system [ComputerSystemElementName].

Explanation: The rebuild of the RAID array is complete.

May also be shown as 816f070d0406ffff or 0x816f070d0406ffff

Severity: Info

Alert Category: System - Other

Serviceable: No

CIM Information: Prefix: PLAT and **ID:** 0179

SNMP Trap ID:

Automatically notify Support: No

User response: Information only; no action is required.

816f070d-0407ffff Rebuild completed for Array in system [ComputerSystemElementName].

Explanation: The rebuild of the RAID array is complete.

May also be shown as 816f070d0407ffff or 0x816f070d0407ffff

Severity: Info

Alert Category: System - Other

Serviceable: No

CIM Information: Prefix: PLAT and **ID:** 0179

SNMP Trap ID:

Automatically notify Support: No

User response: Information only; no action is required.

816f0807-0301ffff CPU 1 has been Enabled.

Explanation: This message is for the use case when an implementation has detected a Processor has been Enabled.

May also be shown as 816f08070301ffff or 0x816f08070301ffff

Explanation: The rebuild of the RAID array is complete.

May also be shown as 816f08070301ffff or 0x816f08070301ffff

Severity: Info

Alert Category: System - Other

Serviceable: No

CIM Information: Prefix: PLAT and **ID:** 0060

SNMP Trap ID:

Automatically notify Support: No

User response: This is a UEFI detected event. To find the UEFI diagnostic code for this event, in the information center, follow the instructions in "Finding the UEFI diagnostic code" under "UEFI diagnostic codes." Then, in the information center, open the topic for the UEFI diagnostic code and follow the instructions under "User response."

User response: Information only; no action is required.

Related Links:

- "Finding the UEFI diagnostic code" on page 521

816f0807-0302ffff CPU 2 has been Enabled.

Explanation: This message is for the use case when an implementation has detected a Processor has been Enabled.

May also be shown as 816f08070302ffff or 0x816f08070302ffff

Severity: Info

Alert Category: System - Other

Serviceable: No

CIM Information: Prefix: PLAT and **ID:** 0060

SNMP Trap ID:

Automatically notify Support: No

User response: This is a UEFI detected event. To find the UEFI diagnostic code for this event, in the information center, follow the instructions in "Finding the UEFI diagnostic code" under "UEFI diagnostic codes." Then, in the information center, open the topic for the UEFI diagnostic code and follow the instructions under "User response."

Related Links:

- "Finding the UEFI diagnostic code" on page 521

816f0807-2584ffff [ProcessorElementName] has been Enabled.

Explanation: This message is for the use case when an implementation has detected a Processor has been Enabled. (It might be All CPUs or One of CPUs as well)

May also be shown as 816f08072584ffff or 0x816f08072584ffff

Severity: Info

Alert Category: System - Other

Serviceable: No

CIM Information: Prefix: PLAT and **ID:** 0060

SNMP Trap ID:

Automatically notify Support: No

User response: This is a UEFI detected event. To find the UEFI diagnostic code for this event, in the information center, follow the instructions in "Finding the UEFI diagnostic code" under "UEFI diagnostic codes." Then, in the information center, open the topic for the UEFI diagnostic code and follow the instructions under "User response."

Related Links:

- "Finding the UEFI diagnostic code" on page 521

816f0813-2581ffff System [ComputerSystemElementName]has recovered from an Uncorrectable Bus Error.

Explanation: This message is for the use case when an implementation has detected a that a system has recovered from a Bus Uncorrectable Error. DIMMs.

May also be shown as 816f08132581ffff or 0x816f08132581ffff

Severity: Info

Alert Category: Critical - Other

Serviceable: No

CIM Information: Prefix: PLAT and **ID:** 0241

SNMP Trap ID: 50

Automatically notify Support: No

User response: This is a UEFI detected event. To find the UEFI diagnostic code for this event, in the information center, follow the instructions in "Finding the UEFI diagnostic code" under "UEFI diagnostic codes." Then, in the information center, open the topic for the UEFI diagnostic code and follow the instructions under "User response."

Related Links:

- "Finding the UEFI diagnostic code" on page 521

816f0813-2584ffff System [ComputerSystemElementName]has recovered from an Uncorrectable Bus Error.

Explanation: This message is for the use case when an implementation has detected a that a system has recovered from a Bus Uncorrectable Error. CPUs.

May also be shown as 816f08132584ffff or 0x816f08132584ffff

Severity: Info

Alert Category: Critical - Other

Serviceable: No

CIM Information: Prefix: PLAT and **ID:** 0241

SNMP Trap ID: 50

Automatically notify Support: No

User response: This is a UEFI detected event. To find the UEFI diagnostic code for this event, in the information center, follow the instructions in "Finding the UEFI diagnostic code" under "UEFI diagnostic codes." Then, in the information center, open the topic for the UEFI diagnostic code and follow the instructions under "User response."

Related Links:

- "Finding the UEFI diagnostic code" on page 521

816f090c-2001ffff memory device 1 in Group 1 on Subsystem System Memory is no longer Throttled

Explanation: DIMM throttling in DIMM connector 1 has been turned off.

May also be shown as 816f090c2001ffff or 0x816f090c2001ffff

Severity: Info

Alert Category: System - Other

Serviceable: No

CIM Information: Prefix: PLAT and **ID:** 0143

SNMP Trap ID:

Automatically notify Support: No

User response: Information only; no action is required.

816f090c-2002ffff memory device 2 in Group 1 on Subsystem System Memory is no longer Throttled

Explanation: DIMM throttling in DIMM connector 2 has been turned off.

May also be shown as 816f090c2002ffff or 0x816f090c2002ffff

Severity: Info

Alert Category: System - Other

Serviceable: No

CIM Information: Prefix: PLAT and **ID:** 0143

SNMP Trap ID:

Automatically notify Support: No

User response: Information only; no action is required.

816f090c-2003ffff memory device 3 in Group 1 on Subsystem System Memory is no longer Throttled

Explanation: DIMM throttling in DIMM connector 3 has been turned off.

May also be shown as 816f090c2003ffff or 0x816f090c2003ffff

Severity: Info

Alert Category: System - Other

Serviceable: No

CIM Information: Prefix: PLAT and **ID:** 0143

SNMP Trap ID:

Automatically notify Support: No

User response: Information only; no action is required.

816f090c-2004ffff memory device 4 in Group 1 on Subsystem System Memory is no longer Throttled

Explanation: DIMM throttling in DIMM connector 4 has been turned off.

May also be shown as 816f090c2004ffff or 0x816f090c2004ffff

Severity: Info

Alert Category: System - Other

Serviceable: No

CIM Information: Prefix: PLAT and **ID:** 0143

SNMP Trap ID:

Automatically notify Support: No

User response: Information only; no action is required.

816f090c-2005ffff memory device 5 in Group 1 on Subsystem System Memory is no longer Throttled

Explanation: DIMM throttling in DIMM connector 5 has been turned off.

May also be shown as 816f090c2005ffff or 0x816f090c2005ffff

Severity: Info

Alert Category: System - Other

Serviceable: No

CIM Information: Prefix: PLAT and **ID:** 0143

SNMP Trap ID:

Automatically notify Support: No

User response: Information only; no action is required.

816f090c-2006ffff memory device 6 in Group 1 on Subsystem System Memory is no longer Throttled

Explanation: DIMM throttling in DIMM connector 6 has been turned off.

May also be shown as 816f090c2006ffff or 0x816f090c2006ffff

Severity: Info

Alert Category: System - Other

Serviceable: No

CIM Information: Prefix: PLAT and **ID:** 0143

SNMP Trap ID:

Automatically notify Support: No

User response: Information only; no action is required.

816f090c-2007ffff memory device 7 in Group 1 on Subsystem System Memory is no longer Throttled

Explanation: DIMM throttling in DIMM connector 7 has been turned off.

May also be shown as 816f090c2007ffff or 0x816f090c2007ffff

Severity: Info

Alert Category: System - Other

Serviceable: No

CIM Information: Prefix: PLAT and **ID:** 0143

SNMP Trap ID:

Automatically notify Support: No

User response: Information only; no action is required.

816f090c-2008ffff memory device 8 in Group 1 on Subsystem System Memory is no longer Throttled

Explanation: DIMM throttling in DIMM connector 8 has been turned off.

May also be shown as 816f090c2008ffff or 0x816f090c2008ffff

Severity: Info

Alert Category: System - Other

Serviceable: No

CIM Information: Prefix: PLAT and **ID:** 0143

SNMP Trap ID:

Automatically notify Support: No

User response: Information only; no action is required.

816f090c-2009ffff memory device 9 in Group 1 on Subsystem System Memory is no longer Throttled

Explanation: DIMM throttling in DIMM connector 9 has been turned off.

May also be shown as 816f090c2009ffff or 0x816f090c2009ffff

Severity: Info

Alert Category: System - Other

Serviceable: No

CIM Information: **Prefix:** PLAT and **ID:** 0143

SNMP Trap ID:

Automatically notify Support: No

User response: Information only; no action is required.

816f090c-200affff memory device 10 in Group 1 on Subsystem System Memory is no longer Throttled

Explanation: DIMM throttling in DIMM connector 10 has been turned off.

May also be shown as 816f090c200affff or 0x816f090c200affff

Severity: Info

Alert Category: System - Other

Serviceable: No

CIM Information: **Prefix:** PLAT and **ID:** 0143

SNMP Trap ID:

Automatically notify Support: No

User response: Information only; no action is required.

816f090c-200bffff memory device 11 in Group 1 on Subsystem System Memory is no longer Throttled

Explanation: DIMM throttling in DIMM connector 11 has been turned off.

May also be shown as 816f090c200bffff or 0x816f090c200bffff

Severity: Info

Alert Category: System - Other

Serviceable: No

CIM Information: **Prefix:** PLAT and **ID:** 0143

SNMP Trap ID:

Automatically notify Support: No

User response: Information only; no action is required.

816f090c-200cffff memory device 12 in Group 1 on Subsystem System Memory is no longer Throttled

Explanation: DIMM throttling in DIMM connector 12 has been turned off.

May also be shown as 816f090c200cffff or 0x816f090c200cffff

Severity: Info

Alert Category: System - Other

Serviceable: No

CIM Information: **Prefix:** PLAT and **ID:** 0143

SNMP Trap ID:

Automatically notify Support: No

User response: Information only; no action is required.

816f090c-200dffff memory device 13 in Group 1 on Subsystem System Memory is no longer Throttled

Explanation: DIMM throttling in DIMM connector 13 has been turned off.

May also be shown as 816f090c200dffff or 0x816f090c200dffff

Severity: Info

Alert Category: System - Other

Serviceable: No

CIM Information: Prefix: PLAT and **ID:** 0143

SNMP Trap ID:

Automatically notify Support: No

User response: Information only; no action is required.

816f090c-200effff memory device 14 in Group 1 on Subsystem System Memory is no longer Throttled

Explanation: DIMM throttling in DIMM connector 14 has been turned off.

May also be shown as 816f090c200effff or 0x816f090c200effff

Severity: Info

Alert Category: System - Other

Serviceable: No

CIM Information: Prefix: PLAT and **ID:** 0143

SNMP Trap ID:

Automatically notify Support: No

User response: Information only; no action is required.

816f090c-200fffff memory device 15 in Group 1 on Subsystem System Memory is no longer Throttled

Explanation: DIMM throttling in DIMM connector 15 has been turned off.

May also be shown as 816f090c200fffff or 0x816f090c200fffff

Severity: Info

Alert Category: System - Other

Serviceable: No

CIM Information: Prefix: PLAT and **ID:** 0143

SNMP Trap ID:

Automatically notify Support: No

User response: Information only; no action is required.

816f090c-2010ffff memory device 16 in Group 1 on Subsystem System Memory is no longer Throttled

Explanation: DIMM throttling in DIMM connector 16 has been turned off.

May also be shown as 816f090c2010ffff or 0x816f090c2010ffff

Severity: Info

Alert Category: System - Other

Serviceable: No

CIM Information: Prefix: PLAT and **ID:** 0143

SNMP Trap ID:

Automatically notify Support: No

User response: Information only; no action is required.

816f090c-2011ffff memory device 17 in Group 1 on Subsystem System Memory is no longer Throttled

Explanation: DIMM throttling in DIMM connector 17 has been turned off.

May also be shown as 816f090c2011ffff or 0x816f090c2011ffff

Severity: Info

Alert Category: System - Other

Serviceable: No

CIM Information: Prefix: PLAT and **ID:** 0143

SNMP Trap ID:

Automatically notify Support: No

User response: Information only; no action is required.

816f090c-2012ffff memory device 18 in Group 1 on Subsystem System Memory is no longer Throttled

Explanation: DIMM throttling in DIMM connector 18 has been turned off.

May also be shown as 816f090c2012ffff or 0x816f090c2012ffff

Severity: Info

Alert Category: System - Other

Serviceable: No

CIM Information: Prefix: PLAT and **ID:** 0143

SNMP Trap ID:

Automatically notify Support: No

User response: Information only; no action is required.

816f090c-2013ffff memory device 19 in Group 1 on Subsystem System Memory is no longer Throttled

Explanation: DIMM throttling in DIMM connector 19 has been turned off.

May also be shown as 816f090c2013ffff or 0x816f090c2013ffff

Severity: Info

Alert Category: System - Other

Serviceable: No

CIM Information: Prefix: PLAT and **ID:** 0143

SNMP Trap ID:

Automatically notify Support: No

User response: Information only; no action is required.

816f090c-2014ffff memory device 20 in Group 1 on Subsystem System Memory is no longer Throttled

Explanation: DIMM throttling in DIMM connector 20 has been turned off.

May also be shown as 816f090c2014ffff or 0x816f090c2014ffff

Severity: Info

Alert Category: System - Other

Serviceable: No

CIM Information: **Prefix:** PLAT and **ID:** 0143

SNMP Trap ID:

Automatically notify Support: No

User response: Information only; no action is required.

816f090c-2015ffff memory device 21 in Group 1 on Subsystem System Memory is no longer Throttled

Explanation: DIMM throttling in DIMM connector 21 has been turned off.

May also be shown as 816f090c2015ffff or 0x816f090c2015ffff

Severity: Info

Alert Category: System - Other

Serviceable: No

CIM Information: **Prefix:** PLAT and **ID:** 0143

SNMP Trap ID:

Automatically notify Support: No

User response: Information only; no action is required.

816f090c-2016ffff memory device 22 in Group 1 on Subsystem System Memory is no longer Throttled

Explanation: DIMM throttling in DIMM connector 22 has been turned off.

May also be shown as 816f090c2016ffff or 0x816f090c2016ffff

Severity: Info

Alert Category: System - Other

Serviceable: No

CIM Information: **Prefix:** PLAT and **ID:** 0143

SNMP Trap ID:

Automatically notify Support: No

User response: Information only; no action is required.

816f090c-2017ffff memory device 23 in Group 1 on Subsystem System Memory is no longer Throttled

Explanation: DIMM throttling in DIMM connector 23 has been turned off.

May also be shown as 816f090c2017ffff or 0x816f090c2017ffff

Severity: Info

Alert Category: System - Other

Serviceable: No

CIM Information: **Prefix:** PLAT and **ID:** 0143

SNMP Trap ID:

Automatically notify Support: No

User response: Information only; no action is required.

816f090c-2018ffff memory device 24 in Group 1 on Subsystem System Memory is no longer Throttled

Explanation: DIMM throttling in DIMM connector 24 has been turned off.

May also be shown as 816f090c2018ffff or 0x816f090c2018ffff

Severity: Info

Alert Category: System - Other

Serviceable: No

CIM Information: Prefix: PLAT and **ID:** 0143

SNMP Trap ID:

Automatically notify Support: No

User response: Information only; no action is required.

816f0a07-0301ffff The Processor CPU 1 is no longer operating in a Degraded State.

Explanation: Microprocessor 1 throttling has been turned off.

May also be shown as 816f0a070301ffff or 0x816f0a070301ffff

Severity: Info

Alert Category: Warning - CPU

Serviceable: No

CIM Information: Prefix: PLAT and **ID:** 0039

SNMP Trap ID: 42

Automatically notify Support: No

User response: Information only; no action is required.

816f0a07-0302ffff The Processor CPU 2 is no longer operating in a Degraded State.

Explanation: Microprocessor 2 throttling has been turned off.

May also be shown as 816f0a070302ffff or 0x816f0a070302ffff

Severity: Info

Alert Category: Warning - CPU

Serviceable: No

CIM Information: Prefix: PLAT and **ID:** 0039

SNMP Trap ID: 42

Automatically notify Support: No

User response: Information only; no action is required.

816f0a07-2584ffff The Processor [ProcessorElementName] is no longer operating in a Degraded State.

Explanation: Microprocessor throttling has been turned off.

May also be shown as 816f0a072584ffff or 0x816f0a072584ffff

Severity: Info

Alert Category: Warning - CPU

Serviceable: No

CIM Information: Prefix: PLAT and **ID:** 0039

SNMP Trap ID: 42

Automatically notify Support: No

User response: Information only; no action is required.

816f0a0c-2001ffff An Over-Temperature Condition has been removed on the memory device 1 in Group 1 on Subsystem System Memory.

Explanation: The DIMM in DIMM connector 1 is no longer in an overtemperature condition.

May also be shown as 816f0a0c2001ffff or 0x816f0a0c2001ffff

Severity: Info

Alert Category: Critical - Temperature

Serviceable: No

CIM Information: Prefix: PLAT and **ID:** 0147

SNMP Trap ID: 0

Automatically notify Support: No

User response: Information only; no action is required.

816f0a0c-2002ffff An Over-Temperature Condition has been removed on the memory device 2 in Group 1 on Subsystem System Memory.

Explanation: The DIMM in DIMM connector 2 is no longer in an overtemperature condition.

May also be shown as 816f0a0c2002ffff or 0x816f0a0c2002ffff

Severity: Info

Alert Category: Critical - Temperature

Serviceable: No

CIM Information: Prefix: PLAT and **ID:** 0147

SNMP Trap ID: 0

Automatically notify Support: No

User response: Information only; no action is required.

816f0a0c-2003ffff An Over-Temperature Condition has been removed on the memory device 3 in Group 1 on Subsystem System Memory.

Explanation: The DIMM in DIMM connector 3 is no longer in an overtemperature condition.

May also be shown as 816f0a0c2003ffff or 0x816f0a0c2003ffff

Severity: Info

Alert Category: Critical - Temperature

Serviceable: No

CIM Information: Prefix: PLAT and **ID:** 0147

SNMP Trap ID: 0

Automatically notify Support: No

User response: Information only; no action is required.

816f0a0c-2004ffff An Over-Temperature Condition has been removed on the memory device 4 in Group 1 on Subsystem System Memory.

Explanation: The DIMM in DIMM connector 4 is no longer in an overtemperature condition.

May also be shown as 816f0a0c2004ffff or 0x816f0a0c2004ffff

Severity: Info

Alert Category: Critical - Temperature

Serviceable: No

CIM Information: Prefix: PLAT and **ID:** 0147

SNMP Trap ID: 0

Automatically notify Support: No

User response: Information only; no action is required.

816f0a0c-2005ffff An Over-Temperature Condition has been removed on the memory device 5 in Group 1 on Subsystem System Memory.

Explanation: The DIMM in DIMM connector 5 is no longer in an overtemperature condition.

May also be shown as 816f0a0c2005ffff or 0x816f0a0c2005ffff

Severity: Info

Alert Category: Critical - Temperature

Serviceable: No

CIM Information: Prefix: PLAT and **ID:** 0147

SNMP Trap ID: 0

Automatically notify Support: No

User response: Information only; no action is required.

816f0a0c-2006ffff An Over-Temperature Condition has been removed on the memory device 6 in Group 1 on Subsystem System Memory.

Explanation: The DIMM in DIMM connector 6 is no longer in an overtemperature condition.

May also be shown as 816f0a0c2006ffff or 0x816f0a0c2006ffff

Severity: Info

Alert Category: Critical - Temperature

Serviceable: No

CIM Information: Prefix: PLAT and **ID:** 0147

SNMP Trap ID: 0

Automatically notify Support: No

User response: Information only; no action is required.

816f0a0c-2007ffff An Over-Temperature Condition has been removed on the memory device 7 in Group 1 on Subsystem System Memory.

Explanation: The DIMM in DIMM connector 7 is no longer in an overtemperature condition.

May also be shown as 816f0a0c2007ffff or 0x816f0a0c2007ffff

Severity: Info

Alert Category: Critical - Temperature

Serviceable: No

CIM Information: Prefix: PLAT and **ID:** 0147

SNMP Trap ID: 0

Automatically notify Support: No

User response: Information only; no action is required.

816f0a0c-2008ffff An Over-Temperature Condition has been removed on the memory device 8 in Group 1 on Subsystem System Memory.

Explanation: The DIMM in DIMM connector 8 is no longer in an overtemperature condition.

May also be shown as 816f0a0c2008ffff or 0x816f0a0c2008ffff

Severity: Info

Alert Category: Critical - Temperature

Serviceable: No

CIM Information: Prefix: PLAT and **ID:** 0147

SNMP Trap ID: 0

Automatically notify Support: No

User response: Information only; no action is required.

816f0a0c-2009ffff An Over-Temperature Condition has been removed on the memory device 9 in Group 1 on Subsystem System Memory.

Explanation: The DIMM in DIMM connector 9 is no longer in an overtemperature condition.

May also be shown as 816f0a0c2009ffff or 0x816f0a0c2009ffff

Severity: Info

Alert Category: Critical - Temperature

Serviceable: No

CIM Information: Prefix: PLAT and **ID:** 0147

SNMP Trap ID: 0

Automatically notify Support: No

User response: Information only; no action is required.

816f0a0c-200affff An Over-Temperature Condition has been removed on the memory device 10 in Group 1 on Subsystem System Memory.

Explanation: The DIMM in DIMM connector 10 is no longer in an overtemperature condition.

May also be shown as 816f0a0c200affff or 0x816f0a0c200affff

Severity: Info

Alert Category: Critical - Temperature

Serviceable: No

CIM Information: Prefix: PLAT and **ID:** 0147

SNMP Trap ID: 0

Automatically notify Support: No

User response: Information only; no action is required.

816f0a0c-200bffff An Over-Temperature Condition has been removed on the memory device 11 in Group 1 on Subsystem System Memory.

Explanation: The DIMM in DIMM connector 11 is no longer in an overtemperature condition.

May also be shown as 816f0a0c200bffff or 0x816f0a0c200bffff

Severity: Info

Alert Category: Critical - Temperature

Serviceable: No

CIM Information: Prefix: PLAT and **ID:** 0147

SNMP Trap ID: 0

Automatically notify Support: No

User response: Information only; no action is required.

816f0a0c-200cffff An Over-Temperature Condition has been removed on the memory device 12 in Group 1 on Subsystem System Memory.

Explanation: The DIMM in DIMM connector 12 is no longer in an overtemperature condition.

May also be shown as 816f0a0c200cffff or 0x816f0a0c200cffff

Severity: Info

Alert Category: Critical - Temperature

Serviceable: No

CIM Information: Prefix: PLAT and **ID:** 0147

SNMP Trap ID: 0

Automatically notify Support: No

User response: Information only; no action is required.

816f0a0c-200dffff An Over-Temperature Condition has been removed on the memory device 13 in Group 1 on Subsystem System Memory.

Explanation: The DIMM in DIMM connector 13 is no longer in an overtemperature condition.

May also be shown as 816f0a0c200dffff or 0x816f0a0c200dffff

Severity: Info

Alert Category: Critical - Temperature

Serviceable: No

CIM Information: Prefix: PLAT and **ID:** 0147

SNMP Trap ID: 0

Automatically notify Support: No

User response: Information only; no action is required.

816f0a0c-200effff An Over-Temperature Condition has been removed on the memory device 14 in Group 1 on Subsystem System Memory.

Explanation: The DIMM in DIMM connector 14 is no longer in an overtemperature condition.

May also be shown as 816f0a0c200effff or 0x816f0a0c200effff

Severity: Info

Alert Category: Critical - Temperature

Serviceable: No

CIM Information: Prefix: PLAT and **ID:** 0147

SNMP Trap ID: 0

Automatically notify Support: No

User response: Information only; no action is required.

816f0a0c-200fffff An Over-Temperature Condition has been removed on the memory device 15 in Group 1 on Subsystem System Memory.

Explanation: The DIMM in DIMM connector 15 is no longer in an overtemperature condition.

May also be shown as 816f0a0c200fffff or 0x816f0a0c200fffff

Severity: Info

Alert Category: Critical - Temperature

Serviceable: No

CIM Information: Prefix: PLAT and **ID:** 0147

SNMP Trap ID: 0

Automatically notify Support: No

User response: Information only; no action is required.

816f0a0c-2010ffff An Over-Temperature Condition has been removed on the memory device 16 in Group 1 on Subsystem System Memory.

Explanation: The DIMM in DIMM connector 16 is no longer in an overtemperature condition.

May also be shown as 816f0a0c2010ffff or 0x816f0a0c2010ffff

Severity: Info

Alert Category: Critical - Temperature

Serviceable: No

CIM Information: Prefix: PLAT and **ID:** 0147

SNMP Trap ID: 0

Automatically notify Support: No

User response: Information only; no action is required.

816f0a0c-2011ffff An Over-Temperature Condition has been removed on the memory device 17 in Group 1 on Subsystem System Memory.

Explanation: The DIMM in DIMM connector 17 is no longer in an overtemperature condition.

May also be shown as 816f0a0c2011ffff or 0x816f0a0c2011ffff

Severity: Info

Alert Category: Critical - Temperature

Serviceable: No

CIM Information: Prefix: PLAT and **ID:** 0147

SNMP Trap ID: 0

Automatically notify Support: No

User response: Information only; no action is required.

816f0a0c-2012ffff An Over-Temperature Condition has been removed on the memory device 18 in Group 1 on Subsystem System Memory.

Explanation: The DIMM in DIMM connector 18 is no longer in an overtemperature condition.

May also be shown as 816f0a0c2012ffff or 0x816f0a0c2012ffff

Severity: Info

Alert Category: Critical - Temperature

Serviceable: No

CIM Information: Prefix: PLAT and **ID:** 0147

SNMP Trap ID: 0

Automatically notify Support: No

User response: Information only; no action is required.

816f0a0c-2013ffff An Over-Temperature Condition has been removed on the memory device 19 in Group 1 on Subsystem System Memory.

Explanation: The DIMM in DIMM connector 19 is no longer in an overtemperature condition.

May also be shown as 816f0a0c2013ffff or 0x816f0a0c2013ffff

Severity: Info

Alert Category: Critical - Temperature

Serviceable: No

CIM Information: Prefix: PLAT and **ID:** 0147

SNMP Trap ID: 0

Automatically notify Support: No

User response: Information only; no action is required.

816f0a0c-2014ffff An Over-Temperature Condition has been removed on the memory device 20 in Group 1 on Subsystem System Memory.

Explanation: The DIMM in DIMM connector 20 is no longer in an overtemperature condition.

May also be shown as 816f0a0c2014ffff or 0x816f0a0c2014ffff

Severity: Info

Alert Category: Critical - Temperature

Serviceable: No

CIM Information: Prefix: PLAT and **ID:** 0147

SNMP Trap ID: 0

Automatically notify Support: No

User response: Information only; no action is required.

816f0a0c-2015ffff An Over-Temperature Condition has been removed on the memory device 21 in Group 1 on Subsystem System Memory.

Explanation: The DIMM in DIMM connector 21 is no longer in an overtemperature condition.

May also be shown as 816f0a0c2015ffff or 0x816f0a0c2015ffff

Severity: Info

Alert Category: Critical - Temperature

Serviceable: No

CIM Information: Prefix: PLAT and **ID:** 0147

SNMP Trap ID: 0

Automatically notify Support: No

User response: Information only; no action is required.

816f0a0c-2016ffff An Over-Temperature Condition has been removed on the memory device 22 in Group 1 on Subsystem System Memory.

Explanation: The DIMM in DIMM connector 22 is no longer in an overtemperature condition.

May also be shown as 816f0a0c2016ffff or 0x816f0a0c2016ffff

Severity: Info

Alert Category: Critical - Temperature

Serviceable: No

CIM Information: Prefix: PLAT and **ID:** 0147

SNMP Trap ID: 0

Automatically notify Support: No

User response: Information only; no action is required.

816f0a0c-2017ffff An Over-Temperature Condition has been removed on the memory device 23 in Group 1 on Subsystem System Memory.

Explanation: The DIMM in DIMM connector 23 is no longer in an overtemperature condition.

May also be shown as 816f0a0c2017ffff or 0x816f0a0c2017ffff

Severity: Info

Alert Category: Critical - Temperature

Serviceable: No

CIM Information: Prefix: PLAT and **ID:** 0147

SNMP Trap ID: 0

Automatically notify Support: No

User response: Information only; no action is required.

816f0a0c-2018ffff An Over-Temperature Condition has been removed on the memory device 24 in Group 1 on Subsystem System Memory.

Explanation: The DIMM in DIMM connector 24 is no longer in an overtemperature condition.

May also be shown as 816f0a0c2018ffff or 0x816f0a0c2018ffff

Severity: Info

Alert Category: Critical - Temperature

Serviceable: No

CIM Information: Prefix: PLAT and **ID:** 0147

SNMP Trap ID: 0

Automatically notify Support: No

User response: Information only; no action is required.

816f0a13-2401ffff System [ComputerSystemElementName] has recovered from a Fatal Bus Error.

Explanation: This message is for the use case when an implementation has detected that a system has recovered from a Bus Fatal Error. SMBus.

May also be shown as 816f0a132401ffff or 0x816f0a132401ffff

Severity: Info

Alert Category: Critical - Other

Serviceable: No

CIM Information: Prefix: PLAT and **ID:** 0245

SNMP Trap ID: 50

Automatically notify Support: No

User response: This is a UEFI detected event. To find the UEFI diagnostic code for this event, in the information center, follow the instructions in "Finding the UEFI diagnostic code" under "UEFI diagnostic codes." Then, in the information center, open the topic for the UEFI diagnostic code and follow the instructions under "User response."

Related Links:

- "Finding the UEFI diagnostic code" on page 521

816f0a13-2582ffff Bus PCIs has recovered from a Fatal Bus Error.

Explanation: The PCIs bus has recovered from a Bus Uncorrectable Error.

May also be shown as 816f0a132582ffff or 0x816f0a132582ffff

Severity: Info

Alert Category: Critical - Other

Serviceable: No

CIM Information: Prefix: PLAT and **ID:** 0241

SNMP Trap ID: 50

Automatically notify Support: No

User response: Information only; no action required.

816f0a13-2c03ffff Bus PEN Mezz3 has recovered from a Fatal Bus Error.

Explanation: A fatal bus error is no longer detected in the I/O expansion adapter in PCIe adapter slot 3 in the PCI expansion unit.

May also be shown as 816f0a132c03ffff or 0x816f0a132c03ffff

Severity: Info

Alert Category: Critical - Other

Serviceable: No

CIM Information: Prefix: PLAT and **ID:** 0245

SNMP Trap ID: 50

Automatically notify Support: No

User response: Information only; no action is required.

816f0a13-2c04ffff Bus PEN Mezz4 has recovered from a Fatal Bus Error.

Explanation: A fatal bus error is no longer detected in the I/O expansion adapter in PCIe adapter slot 4 in the PCI expansion unit.

May also be shown as 816f0a132c04ffff or 0x816f0a132c04ffff

Severity: Info

Alert Category: Critical - Other

Serviceable: No

CIM Information: Prefix: PLAT and **ID:** 0245

SNMP Trap ID: 50

Automatically notify Support: No

User response: Information only; no action is required.

816f0a13-3101ffff Bus PEN Slot1 has recovered from a Fatal Bus Error.

Explanation: A fatal bus error is no longer detected in the I/O expansion adapter in PCIe adapter slot 1 in the PCI expansion unit.

May also be shown as 816f0a133101ffff or 0x816f0a133101ffff

Severity: Info

Alert Category: Critical - Other

Serviceable: No

CIM Information: Prefix: PLAT and **ID:** 0245

SNMP Trap ID: 50

Automatically notify Support: No

User response: Information only; no action is required.

816f0a13-3102ffff Bus PEN Slot2 has recovered from a Fatal Bus Error.

Explanation: A fatal bus error is no longer detected in the I/O expansion adapter in PCIe adapter slot 2 in the PCI expansion unit.

May also be shown as 816f0a133102ffff or 0x816f0a133102ffff

Severity: Info

Alert Category: Critical - Other

Serviceable: No

CIM Information: Prefix: PLAT and **ID:** 0245

SNMP Trap ID: 50

Automatically notify Support: No

User response: Information only; no action is required.

816f0a13-3103ffff Bus PEN Slot3 has recovered from a Fatal Bus Error.

Explanation: A fatal bus error is no longer detected in the I/O expansion adapter in PCIe adapter slot 3 in the PCI expansion unit.

May also be shown as 816f0a133103ffff or 0x816f0a133103ffff

Severity: Info

Alert Category: Critical - Other

816f0a13-3104ffff

Serviceable: No

CIM Information: **Prefix:** PLAT and **ID:** 0245

SNMP Trap ID: 50

Automatically notify Support: No

User response: Information only; no action is required.

816f0a13-3104ffff Bus PEN Slot4 has recovered from a Fatal Bus Error.

Explanation: A fatal bus error is no longer detected in the I/O expansion adapter in PCIe adapter slot 4 in the PCI expansion unit.

May also be shown as 816f0a133104ffff or 0x816f0a133104ffff

Severity: Info

Alert Category: Critical - Other

Serviceable: No

CIM Information: **Prefix:** PLAT and **ID:** 0245

SNMP Trap ID: 50

Automatically notify Support: No

User response: Information only; no action is required.

UEFI diagnostic codes

UEFI diagnostic codes can be generated when the compute node starts up or while the compute node is running. UEFI diagnostic codes are logged in the IMM event log in the compute node.

UEFI diagnostic code fields

For each event code, the following fields are displayed:

Event identifier
An identifier that uniquely identifies an event.

Event description
The logged message string that appears for an event.

Explanation
Additional information to explain why the event occurred.

Severity
An indication of the level of concern for the condition. The severity is abbreviated in the event log to the first character. The following severities can be displayed.

Table 11. Severity levels

Severity	Description
Informational	An informational message is something that was recorded for audit purposes, usually a user action or a change of states that is normal behavior.
Warning	A warning is not as severe as an error, but if possible, the condition should be corrected before it becomes an error. It might also be a condition that requires additional monitoring or maintenance.
Error	An error typically indicates a failure or critical condition that impairs service or an expected function.

User response

Indicates what actions you should perform to resolve the event.

Perform the steps listed in this section in the order shown until the problem is solved. After you perform all of the actions that are described in this field, if you cannot solve the problem, contact IBM Support.

Finding the UEFI diagnostic code

This topic provides information about finding the UEFI diagnostic code.

Several methods are available to locate the UEFI diagnostic code based on the systems-management platform you are using or if you are viewing test results generated by the DSA Preboot diagnostic program.

Note: Not all events have a UEFI diagnostic code associated with the event.

Table 12. Finding the UEFI diagnostic code

Interface to the UEFI diagnostic code	Action
Logged on to IBM Flex System Manager management software (if installed)	1. Go to the Problems (Active Status) view and click the name of the problem. 2. Click on the **Recommendations** tab and locate the UEFI diagnostic code.
Logged on to the IMM or CMM web interface	1. Open the Events menu and click **Event Log**. 2. Click **more** next to the event message and locate the UEFI diagnostic code.
Viewing the DSA Preboot diagnostic program test results	1. Go to the Chassis Event log. 2. Scroll to the right and look in the Auxillary Data Column to find the UEFI diagnostic code.

I.11002 [I.11002] A processor mismatch has been detected between one or more processors in the system.

Explanation: One or More Mismatched Processors Detected

Severity: Info

User response: Complete the following steps:

1. This message could occur with messages about other processor configuration problems. Resolve those messages first.
2. If the problem persists, ensure that matching processors are installed (i.e., matching option part numbers, etc)
3. Verify that the processors are installed in the correct sockets. If not, correct that problem.
4. Check the IBM support site for an applicable service bulletin or firmware update that applies to this processor error.
5. Replace mismatching processor. Inspect the processor socket and replace the system board first if the socket is damaged.

Related Links:

- “Removing a microprocessor and heat sink” on page 615
- “Installing a microprocessor and heat sink” on page 621
- “Removing the system-board assembly” on page 631
- “Installing the system-board assembly” on page 633

I.18005 **[I.18005] A discrepancy has been detected in the number of cores reported by one or more processor packages within the system.**

Explanation: Processors have mismatched number of cores

Severity: Info

User response: Complete the following steps:

1. If this is a newly installed option, ensure that matching processors are installed in the correct processor sockets.
2. Check the IBM support site for an applicable service bulletin that applies to this processor error.
3. Replace the processor. Inspect the processor socket and replace the system board first if the socket is damaged.

Related Links:

- "Removing a microprocessor and heat sink" on page 615
- "Installing a microprocessor and heat sink" on page 621
- "Removing the system-board assembly" on page 631
- "Installing the system-board assembly" on page 633

I.18006 **[I.18006] A mismatch between the maximum allowed QPI link speed has been detected for one or more processor packages.**

Explanation: Processors have mismatched QPI Speed

Severity: Info

User response: Complete the following steps:

1. If this is a newly installed option, ensure that matching processors are installed in the correct processor sockets.
2. Check the IBM support site for an applicable service bulletin or firmware update that applies to this processor error.
3. Replace the processor. Inspect the processor socket and replace the system board first if the socket is damaged.

Related Links:

- "Removing a microprocessor and heat sink" on page 615
- "Installing a microprocessor and heat sink" on page 621
- "Removing the system-board assembly" on page 631
- "Installing the system-board assembly" on page 633

I.18007 **[I.18007] A power segment mismatch has been detected for one or more processor packages.**

Explanation: Processors have mismatched Power Segments

Severity: Info

User response: Complete the following steps:

1. Processors installed do not have the same power requirements
2. Ensure that all Processors have matching power requirements (such as 65, 95, or 130 Watts)
3. If power requirements match, check the IBM support site for an applicable service bulletin or firmware update that applies to this processor error.
4. Replace the processor. Inspect the processor socket and replace the system board first if the socket is damaged

Related Links:

- "Removing a microprocessor and heat sink" on page 615
- "Installing a microprocessor and heat sink" on page 621
- "Removing the system-board assembly" on page 631
- "Installing the system-board assembly" on page 633

I.18008 **[I.18008] Currently, there is no additional information for this event.**

Explanation: Processors have mismatched Internal DDR3 Frequency

Severity: Info

User response: Complete the following steps:

1. Verify that matching DIMMs are installed in the correct population sequence. Correct any configuration issues found.
2. Replace the associated processor. Inspect the processor socket and replace the system board first if the socket is damaged

Related Links:

- "Installing a DIMM" on page 591
- "Removing a microprocessor and heat sink" on page 615
- "Installing a microprocessor and heat sink" on page 621
- "Removing the system-board assembly" on page 631
- "Installing the system-board assembly" on page 633

I.18009 **[I.18009] A core speed mismatch has been detected for one or more processor packages.**

Explanation: Processors have mismatched Core Speed

Severity: Info

User response: Complete the following steps:

1. Verify that matching processors are installed in the correct processor sockets. Correct any mismatch issues found.
2. Check the IBM support site for an applicable service bulletin or firmware update that applies to this processor error.
3. Replace the processor. Inspect the processor socket and replace the system board first if the socket is damaged.

Related Links:

- "Installing a microprocessor and heat sink" on page 621
- "Removing the system-board assembly" on page 631
- "Installing the system-board assembly" on page 633

I.1800A **[I.1800A] A mismatch has been detected between the speed at which a QPI link has trained between two or more processor packages.**

Explanation: Processors have mismatched Bus Speed

Severity: Info

User response: Complete the following steps:

1. Verify that the processor is a valid option that is listed as a Server Proven device for this system. If not, remove the Processor and install one listed on the Server Proven website.
2. Verify that matching processors are installed in the correct processor sockets. Correct any mismatch found.
3. Check the IBM support site for an applicable service bulletin or firmware update that applies to this processor error.
4. Replace the processor. Inspect the processor socket and replace the system board first if the socket is damaged

Related Links:

- "Removing a microprocessor and heat sink" on page 615
- "Installing a microprocessor and heat sink" on page 621
- "Removing the system-board assembly" on page 631
- "Installing the system-board assembly" on page 633

I.1800B [I.1800B] A cache size mismatch has been detected for one or more processor packages.

Explanation: Processors have one or more cache levels with mismatched size

Severity: Info

User response: Complete the following steps:

1. Verify that matching processors are installed in the correct processor sockets. Correct any mismatch found.
2. Check the IBM support site for an applicable service bulletin or firmware update that applies to this processor error.
3. Replace the system board.

Related Links:

- "Removing a microprocessor and heat sink" on page 615
- "Installing a microprocessor and heat sink" on page 621
- "Removing the system-board assembly" on page 631
- "Installing the system-board assembly" on page 633

I.1800C [I.1800C] A cache type mismatch has been detected for one or more processor packages.

Explanation: Processors have one or more cache levels with mismatched type

Severity: Info

User response: Complete the following steps:

1. Verify that matching processors are installed in the correct processor sockets.
2. Check the IBM support site for an applicable service bulletin or firmware update that applies to this processor error.
3. Replace the system board.

Related Links:

- "Removing a microprocessor and heat sink" on page 615
- "Installing a microprocessor and heat sink" on page 621
- "Removing the system-board assembly" on page 631
- "Installing the system-board assembly" on page 633

I.1800D [I.1800D] A cache associativity mismatch has been detected for one or more processor packages.

Explanation: Processors have one or more cache levels with mismatched associativity

Severity: Info

User response: Complete the following steps:

1. Verify that matching processors are installed in the correct processor sockets.
2. Check the IBM support site for an applicable service bulletin or firmware update that applies to this processor error.
3. Replace the system board.

Related Links:

- "Removing a microprocessor and heat sink" on page 615
- "Installing a microprocessor and heat sink" on page 621
- "Removing the system-board assembly" on page 631
- "Installing the system-board assembly" on page 633

I.1800E [I.1800E] A processor model mismatch has been detected for one or more processor packages.

Explanation: Processors have mismatched Model Number

Severity: Info

User response: Complete the following steps:

1. Verify that matching processors are installed in the correct processor sockets.
2. Check the IBM support site for an applicable service bulletin or firmware update that applies to this Processor error.
3. Replace the system board.

Related Links:

- "Removing a microprocessor and heat sink" on page 615
- "Installing a microprocessor and heat sink" on page 621
- "Removing the system-board assembly" on page 631
- "Installing the system-board assembly" on page 633

I.1800F [I.1800F] A processor family mismatch has been detected for one or more processor packages.

Explanation: Processors have mismatched Family

Severity: Info

User response: Complete the following steps:

1. Verify that matching processors are installed in the correct processor sockets.
2. Check the IBM support site for an applicable service bulletin or firmware update that applies to this processor error.
3. Replace the system board.

Related Links:

- "Removing a microprocessor and heat sink" on page 615
- "Installing a microprocessor and heat sink" on page 621
- "Removing the system-board assembly" on page 631
- "Installing the system-board assembly" on page 633

I.18010 [I.18010] A processor stepping mismatch has been detected for one or more processor packages.

Explanation: Processors of the same model have mismatched Stepping ID

Severity: Info

User response: Complete the following steps:

1. Verify that matching processors are installed in the correct processor sockets.
2. Check the IBM support site for an applicable service bulletin or firmware update that applies to this processor error.
3. Replace the system board.

Related Links:

- "Removing a microprocessor and heat sink" on page 615
- "Installing a microprocessor and heat sink" on page 621
- "Removing the system-board assembly" on page 631
- "Installing the system-board assembly" on page 633

I.2018002 **[I.2018002] The device found at Bus % Device % Function % could not be configured due to resource constraints. The Vendor ID for the device is % and the Device ID is %.**

Explanation: OUT_OF_RESOURCES (PCI Option ROM)

Severity: Info

User response: Complete the following steps:

1. If this PCIe device and/or any attached cables were recently installed, moved, serviced or upgraded, reseat the adapter and any attached cables.
2. Check the IBM support site for any applicable service bulletin or UEFI or adapter firmware update that applies to this error.

   NOTE: It may be necessary to disable unused option ROMs from UEFI F1 setup or ASU or using adapter manufacturer utilities so that adapter firmware can be updated.
3. Move the adapter to a different slot. If a slot is not available or error recurs, replace the adapter.
4. If the adapter was moved to a different slot and the error did not recur, verify that this is not a system limitation. Then replace the system board. Also, if this is not the initial installation and the error persists after adapter replacement, replace the system board.

Related Links:

- "Removing an I/O expansion adapter" on page 605
- "Installing an I/O expansion adapter" on page 606
- "Removing the system-board assembly" on page 631
- "Installing the system-board assembly" on page 633

I.2018003 **[I.2018003] A bad option ROM checksum was detected for the device found at Bus % Device % Function %. The Vendor ID for the device is % and the Device ID is %.**

Explanation: ROM CHECKSUM ERROR

Severity: Info

User response: Complete the following steps:

1. If this PCIe device and/or any attached cables were recently installed, moved, serviced or upgraded, reseat the adapter and any attached cables.
2. Move the adapter to a different system slot, if available.
3. Check the IBM support site for any applicable service bulletin or UEFI or adapter firmware update that applies to this error.

   NOTE: It may be necessary to configure slot to Gen1 or to use special utility software so that adapter firmware can be upgraded. Gen1/Gen2 settings can be configured via F1 Setup -> System Settings -> Devices and I/O Ports -> PCIe Gen1/Gen2/Gen3 Speed Selection, or the ASU Utility.
4. Replace the adapter.

Related Links:

- "Removing an I/O expansion adapter" on page 605
- "Installing an I/O expansion adapter" on page 606
- "Using the Setup utility" on page 25

I.3048005 **[I.3048005] UEFI has booted from the backup flash bank.**

Explanation: Booting Backup UEFI Image

Severity: Info

User response: Complete the following steps:

Return the system to primary bank.

Related Links:

- "Recovering a UEFI image" on page 22

I.3808004 [I.3808004] The IMM System Event log (SEL) is full.

Explanation: IPMI System Event Log is Full

Severity: Info

User response: Complete the following steps:

1. Use the IMM Web Interface to clear the event log.
2. If IMM communication is unavailable, use the Setup Utility to access the System Event Logs Menu and choose Clear IMM System Event Log and Restart Server.

Related Links:

- "Using the Setup utility" on page 25

I.3818001 [I.3818001] The firmware image capsule signature for the currently booted flash bank is invalid.

Explanation: Current Bank CRTM Capsule Update Signature Invalid

Severity: Info

User response: Complete the following steps:

1. Reboot the system. Will come up on backup UEFI image. Update the primary UEFI image.
2. If error does not persist no additional recovery action is required.
3. If error persists, or boot is unsuccessful, replace the system board.

Related Links:

- "Updating firmware and device drivers" on page 21
- "Removing the system-board assembly" on page 631
- "Installing the system-board assembly" on page 633

I.3818002 [I.3818002] The firmware image capsule signature for the non-booted flash bank is invalid.

Explanation: Opposite Bank CRTM Capsule Update Signature Invalid

Severity: Info

User response: Complete the following steps:

1. Update the backup UEFI image.
2. If error does not persist, no additional recovery action is required.
3. If error persists, or boot is unsuccessful, replace the system board.

Related Links:

- "Updating firmware and device drivers" on page 21
- "Removing the system-board assembly" on page 631
- "Installing the system-board assembly" on page 633

I.3818003 [I.3818003] The CRTM flash driver could not lock the secure flash region.

Explanation: CRTM Could not lock secure flash region

Severity: Info

User response: Complete the following steps:

1. If system failed to boot successfully, DC cycle the system.
2. If system boots to F1 setup, update the UEFI image and reset bank to primary (if required). If the system boots without error, recovery is complete and no additional action is required.
3. If system fails to boot, or if the firmware update attempt fails, replace the system board.

Related Links:

- "Updating firmware and device drivers" on page 21
- "Removing the system-board assembly" on page 631

- "Installing the system-board assembly" on page 633

I.3868000 [I.3868000] BOFM: System reset performed to reset adapters.

Explanation: BOFM: System reset performed to reset adapters

Severity: Info

User response: Complete the following steps:

Information only; no action is required.

I.3868003 [I.3868003] BOFM: Configuration to large for compatibility mode.

Explanation: BOFM: Configuration too large for compatibility mode

Severity: Info

User response: Complete the following steps:

Information only; no action is required.

I.58015 [I.58015] Memory spare copy initiated.

Explanation: Spare Copy Started

Severity: Info

User response: Complete the following steps:

Information only; no action is required.

I.580A4 [I.580A4] Memory population change detected.

Explanation: DIMM Population Change Detected

Severity: Info

User response: Complete the following steps:

Check system event log for uncorrected DIMM failures and replace those DIMMs.

Related Links:

- "Removing a DIMM" on page 589
- "Installing a DIMM" on page 591

I.580A5 [I.580A5] Mirror Fail-over complete. DIMM number % has failed over to to the mirrored copy.

Explanation: DIMM Mirror Fail-over Detected

Severity: Info

User response: Complete the following steps:

Check the system-event log for uncorrected DIMM failures and replace those DIMMs.

Related Links:

- "Removing a DIMM" on page 589
- "Installing a DIMM" on page 591

I.580A6 [I.580A6] Memory spare copy has completed successfully.

Explanation: Spare Copy Complete

Severity: Info

User response: Complete the following steps:

Check system log for related DIMM failures and replace those DIMMs.

Related Links:

- "Removing a DIMM" on page 589
- "Installing a DIMM" on page 591

S.1100C [S.1100C] An uncorrectable error has been detected on processor %.

Explanation: Uncorrectable processor error detected

Severity: Error

User response: Complete the following steps:

1. Check the IBM support site for an applicable service bulletin or firmware update that applies to this error.
2. Reboot the system. If problem persists, contact Support.

S.2011001 [S.2011001] An Uncorrected PCIe Error has Occurred at Bus % Device % Function %. The Vendor ID for the device is % and the Device ID is %.

Explanation: PCI SERR Detected

Severity: Error

User response: Complete the following steps:

1. If this compute node and/or any attached cables were recently installed, moved, serviced or upgraded,
   a. Reseat the adapter and any attached cables.
   b. Reload the device driver.
   c. If device is not recognized, reconfiguring slot to Gen1 or Gen2 may be required. Gen1/Gen2 settings can be configured via F1 Setup -> System Settings -> Devices and I/O Ports -> PCIe Gen1/Gen2/Gen3 Speed Selection, or the ASU Utility.
2. Check the IBM support site for an applicable device driver, firmware update, or other information that applies to this error. Load the new device driver and install any required firmware updates.
3. If the problem persists, remove the adapter. If system reboots successfully without the adapter, replace that adapter.
4. Replace the processor.

Related Links:

- "Removing an I/O expansion adapter" on page 605
- "Installing an I/O expansion adapter" on page 606
- "Using the Setup utility" on page 25
- "Updating firmware and device drivers" on page 21
- "Removing a microprocessor and heat sink" on page 615
- "Installing a microprocessor and heat sink" on page 621

S.2018001 [S.2018001] An Uncorrected PCIe Error has Occurred at Bus % Device % Function %. The Vendor ID for the device is % and the Device ID is %.

Explanation: PCIe Uncorrected Error Detected

Severity: Error

User response: Complete the following steps:

1. If this compute node and/or any attached cables were recently installed, moved, serviced or upgraded:
   a. Reseat the adapter and any attached cables.
   b. Reload the device driver.
   c. If device is not recognized, reconfiguring slot to Gen1 or Gen2 may be required. Gen1/Gen2 settings can be configured via F1 Setup -> System Settings -> Devices and I/O Ports -> PCIe Gen1/Gen2/Gen3 Speed Selection, or the ASU Utility.
2. Check the IBM support site for an applicable device driver, firmware update, or other information that applies to this error. Load the new device driver and install any required firmware updates.

3. If the problem persists, remove the adapter. If the system reboots successfully without the adapter, replace that adapter.
4. Replace the processor.

Related Links:

- "Removing an I/O expansion adapter" on page 605
- "Installing an I/O expansion adapter" on page 606
- "Using the Setup utility" on page 25
- "Updating firmware and device drivers" on page 21
- "Removing a microprocessor and heat sink" on page 615
- "Installing a microprocessor and heat sink" on page 621

S.3020007 [S.3020007] A firmware fault has been detected in the UEFI image.

Explanation: Internal UEFI Firmware Fault Detected, System halted

Severity: Error

User response: Complete the following steps:

1. Check the IBM support site for an applicable service bulletin or firmware update that applies to this error.
2. Update the UEFI image.
3. Replace the system board.

Related Links:

- "Updating firmware and device drivers" on page 21
- "Removing the system-board assembly" on page 631
- "Installing the system-board assembly" on page 633

S.3028002 [S.3028002] Boot permission timeout detected.

Explanation: Boot Permission Negotiation Timeout

Severity: Error

User response: Complete the following steps:

1. Check CMM/IMM logs for communication errors and resolve.
2. Reseat the system.
3. If problem persists, contact Support.

S.3030007 [S.3030007] A firmware fault has been detected in the UEFI image.

Explanation: Internal UEFI Firmware Fault Detected, System halted

Severity: Error

User response: Complete the following steps:

1. Check the IBM support site for an applicable service bulletin or firmware update that applies to this error.
2. Update the UEFI image.
3. Replace the system board.

Related Links:

- "Updating firmware and device drivers" on page 21
- "Removing the system-board assembly" on page 631
- "Installing the system-board assembly" on page 633

S.3040007 [S.3040007] A firmware fault has been detected in the UEFI image.

Explanation: Internal UEFI Firmware Fault Detected, System halted

Severity: Error

User response: Complete the following steps:

1. Check the IBM support site for an applicable service bulletin or firmware update that applies to this error.
2. Update the UEFI image.
3. Replace the system board.

Related Links:

- "Updating firmware and device drivers" on page 21
- "Removing the system-board assembly" on page 631
- "Installing the system-board assembly" on page 633

S.3050007 [S.3050007] A firmware fault has been detected in the UEFI image.

Explanation: Internal UEFI Firmware Fault Detected, System halted

Severity: Error

User response: Complete the following steps:

1. Check the IBM support site for an applicable service bulletin or firmware update that applies to this error.
2. Update the UEFI image.
3. Replace the system board.

Related Links:

- "Updating firmware and device drivers" on page 21
- "Removing the system-board assembly" on page 631
- "Installing the system-board assembly" on page 633

S.3058004 [S.3058004] A Three Strike boot failure has occurred. The system has booted with default UEFI settings.

Explanation: POST failure has occurred! System booted with default settings.

Severity: Error

User response: Complete the following steps:

1. This event resets UEFI to the default settings for the next boot. If successful, the Setup Utility is displayed. The original UEFI settings are still present.
2. If you did not intentionally trigger the reboots, check logs for probable cause.
3. Undo recent system changes (settings or devices added). If there were no recent system changes, remove all options, and then remove the CMOS battery for 30 seconds to clear CMOS contents. Verify that the system boots. Then, re-install the options one at a time to locate the problem.
4. Check the IBM support site for an applicable service bulletin or firmware update that applies to this error.
5. Update the UEFI firmware.
6. Remove and re-install CMOS battery for 30 seconds to clear CMOS contents
7. Replace the system board.

Related Links:

- "Removing the CMOS battery" on page 587
- "Installing the CMOS battery" on page 588
- "Updating firmware and device drivers" on page 21
- "Using the Setup utility" on page 25
- "Removing the system-board assembly" on page 631
- "Installing the system-board assembly" on page 633

S.3060007 [S.3060007] A firmware fault has been detected in the UEFI image.

Explanation: Internal UEFI Firmware Fault Detected, System halted

Severity: Error

User response: Complete the following steps:

1. Check the IBM support site for an applicable service bulletin or firmware update that applies to this error.
2. Update the UEFI image.
3. Replace the system board.

Related Links:

- "Updating firmware and device drivers" on page 21
- "Removing the system-board assembly" on page 631
- "Installing the system-board assembly" on page 633

S.3070007 [S.3070007] A firmware fault has been detected in the UEFI image.

Explanation: Internal UEFI Firmware Fault Detected, System halted

Severity: Error

User response: Complete the following steps:

1. Check the IBM support site for an applicable service bulletin or firmware update that applies to this error.
2. Update the UEFI image.
3. Replace the system board.

Related Links:

- "Updating firmware and device drivers" on page 21
- "Removing the system-board assembly" on page 631
- "Installing the system-board assembly" on page 633

S.3108007 [S.3108007] The default system settings have been restored.

Explanation: System Configuration Restored to Defaults

Severity: Error

User response: Complete the following steps:

Check the IBM support site for an applicable service bulletin or firmware update that applies to this error.

Related Links:

- "Updating firmware and device drivers" on page 21

S.3818004 [S.3818004] The CRTM flash driver could not successfully flash the staging area. A failure occurred.

Explanation: CRTM Update Failed

Severity: Error

User response: Complete the following steps:

1. Continue booting the system. If the system does not reset, manually reset the system.
2. If the error is not reported on the subsequent boot, no additional recovery action is required.
3. If the error persists, continue booting system and update the UEFI image.
4. Replace the system board.

Related Links:

- "Updating firmware and device drivers" on page 21
- "Removing the system-board assembly" on page 631
- "Installing the system-board assembly" on page 633

S.3818007 [S.3818007] The firmware image capsules for both flash banks could not be verified.

Explanation: CRTM image capsule could not be verified

Severity: Error

User response: Complete the following steps:

1. If system failed to boot successfully, DC cycle system.
2. If system boots to F1 setup, update the UEFI image and reset bank to primary (if required). If the system boots without error, recovery is complete and no additional action is required.
3. If system fails to boot, or if the firmware update attempt fails, replace the system board.

Related Links:

- "Updating firmware and device drivers" on page 21
- "Removing the system-board assembly" on page 631
- "Installing the system-board assembly" on page 633

S.51003 [S.51003] An uncorrectable memory error was detected in DIMM slot % on rank %.

Explanation: [S.51003] An uncorrectable memory error was detected on processor % channel %. The failing DIMM within the channel could not be determined.

[S.51003] An uncorrectable memory error has been detected during POST. Fatal Memory Error Occurred

Severity: Error

User response: Complete the following steps:

1. Prior to replacing memory DIMM, refer to TIP H212154 for minimum code level.
2. If the compute node has recently been installed, moved, serviced, or upgraded, verify that the DIMM is properly seated and visually verify that there is no foreign material in any DIMM connector on that memory channel. If either of these conditions is found, correct and retry with the same DIMM. (Note: The event Log might contain a recent 00580A4 event denoting detected change in DIMM population that could be related to this problem.)
3. If no problem is observed on the DIMM connectors or the problem persists, replace the DIMM identified by LightPath and/or event log entry.
4. If problem recurs on the same DIMM connector, replace the other DIMMs on the same memory channel.
5. Check the IBM support site for an applicable service bulletin or firmware update that applies to this memory error.
6. If problem recurs on the same DIMM connector, inspect connector for damage. If found, replace the system board.
7. Replace the affected Processor.
8. Replace system board.

Related Links:

- "Removing a DIMM" on page 589
- "Installing a DIMM" on page 591
- "Removing a microprocessor and heat sink" on page 615
- "Installing a microprocessor and heat sink" on page 621
- "Removing the system-board assembly" on page 631
- "Installing the system-board assembly" on page 633

S.51006 [S.51006] A memory mismatch has been detected. Please verify that the memory configuration is valid.

Explanation: One or More Mismatched DIMMs Detected

Severity: Error

User response: Complete the following steps:

1. Could follow an uncorrectable memory error or failed memory test. Check the log and service that event first. DIMMs disabled by other errors or actions could cause this event.
2. Verify that the DIMMs are installed in the correct population sequence.
3. Disable memory mirroring and sparing. If this action eliminates the mismatch, check the IBM Support site for information related to this problem.
4. Update UEFI firmware.
5. Replace the DIMM
6. Replace the processor.

Related Links:

- "Removing a DIMM" on page 589
- "Installing a DIMM" on page 591
- "Removing a microprocessor and heat sink" on page 615
- "Installing a microprocessor and heat sink" on page 621

S.51009 [S.51009] No system memory has been detected.

Explanation: No Memory Detected

Severity: Error

User response: Complete the following steps:

1. If any memory errors are logged other than this one, take actions indicated for those codes first.
2. If no other memory diagnostic codes appear in the logs, verify that all DIMM connectors are enabled using the Setup utility or the Advanced Settings Utility (ASU).
3. If the problem remains, shut down and remove node from chassis and physically verify that one or more DIMMs are installed and that all DIMMs are installed in the correct population sequence.
4. If DIMMs are present and properly installed, check for any lit DIMM-connector LEDs, and if found, reseat those DIMMs.
5. Reinstall node in chassis, power on node, then check logs for memory diagnostic codes.
6. If the problem remains, replace the processor.
7. If the problem remains, replace the system board.

Related Links:

- "Removing a DIMM" on page 589
- "Installing a DIMM" on page 591
- "Using the Setup utility" on page 25
- "Removing a microprocessor and heat sink" on page 615
- "Installing a microprocessor and heat sink" on page 621
- "Removing the system-board assembly" on page 631
- "Installing the system-board assembly" on page 633

S.58008 [S.58008] A DIMM has failed the POST memory test.

Explanation: DIMM Failed Memory Test

Severity: Error

User response: Complete the following steps:

1. Prior to replacing memory DIMM, refer to TIP H212154 for minimum code level.
2. You must AC-cycle the system to re-enable the affected DIMM connector or re-enable manually using the Setup utility.
3. If the compute node has been recently installed, serviced, moved, or upgraded, check to ensure that DIMMs are firmly seated and that no foreign material can be seen in the DIMM connector. If either condition is observed, correct and retry with the same DIMM. (Note: The event Log might contain a recent 00580A4 event denoting detected change in DIMM population that could be related to this problem.)

4. If problem persists, replace the DIMM identified by LightPath and/or event log entry.
5. If problem recurs on the same DIMM connector, swap the other DIMMs on the same memory channel across channels one at a time to a different memory channel or processor. If problem follows a moved DIMM to a different memory channel, replace that DIMM.
6. Check the IBM support site for an applicable service bulletin or firmware update that applies to this memory error.
7. If problem stays with the original DIMM connector, re-inspect DIMM connector for foreign material and remove, if found. If connector is damaged, replace system board.
8. Remove the affected processor and inspect the processor socket pins for damaged or mis-aligned pins. If damage is found, or this is an upgrade processor, replace the system board. If there are multiple processors, swap them to move affected procesor to another processor socket and retry. If problem follows the affected processor (or there is only one processor), replace the affected processor.
9. Replace the system board.

Related Links:

- "Removing a DIMM" on page 589
- "Installing a DIMM" on page 591
- "Using the Setup utility" on page 25
- "Removing a microprocessor and heat sink" on page 615
- "Installing a microprocessor and heat sink" on page 621
- "Removing the system-board assembly" on page 631
- "Installing the system-board assembly" on page 633

S.68005 **[S.68005] An error has been detected by the the IIO core logic on Bus %. The Global Fatal Error Status register contains %. The Global Non-Fatal Error Status register contains %. Please check error logs for the presence of additional downstream device error data.**

Explanation: Critical IOH-PCI Error

Severity: Error

User response: Complete the following steps:

1. Check the log for a separate error related to an associated PCIe device and resolve that error.
2. Check the IBM support site for an applicable service bulletin or firmware update for the system or adapter that applies to this error.
3. Replace the system board.

Related Links:

- "Removing the system-board assembly" on page 631
- "Installing the system-board assembly" on page 633

S.680B8 **[S.680B8] Internal QPI Link Failure Detected.**

Explanation: Internal QPI Link Failure Detected

Severity: Error

User response: Complete the following steps:

1. Check the IBM support site for an applicable service bulletin or firmware update that applies to this error.
2. Inspect the processor socket for foreign debris or damage. If debris is found, remove the debris.
3. If error recurs, or socket damage is found, replace the system board.

Related Links:

- "Removing a microprocessor and heat sink" on page 615
- "Installing a microprocessor and heat sink" on page 621
- "Removing the system-board assembly" on page 631
- "Installing the system-board assembly" on page 633

S.680B9 [S.680B9] External QPI Link Failure Detected.

Explanation: External QPI Link Failure Detected

Severity: Error

User response: Complete the following steps:

1. Check the IBM support site for an applicable service bulletin or firmware update that applies to this error.
2. Inspect the processor socket for foreign debris or damage. If debris is found, remove the debris.
3. If error recurs, or socket damage is found, replace the system board.

Related Links:

- "Removing a microprocessor and heat sink" on page 615
- "Installing a microprocessor and heat sink" on page 621
- "Removing the system-board assembly" on page 631
- "Installing the system-board assembly" on page 633

W.11004 [W.11004] A processor within the system has failed the BIST.

Explanation: Processor Self Test Failure Detected

Severity: Warning

User response: Complete the following steps:

1. If the processor or firmware was just updated, check the IBM support site for an applicable service bulletin or firmware update that applies to this processor error.
2. If there are multiple Processors, swap Processors to move affected processor to another processor socket and retry. If problem follows the affected processor, or this is a single processor system, replace the processor. Inspect the processor socket on each processor removal and replace system board first if the processor socket is damaged or mis-aligned pins are found.
3. Replace the system board.

Related Links:

- "Removing a microprocessor and heat sink" on page 615
- "Installing a microprocessor and heat sink" on page 621
- "Removing the system-board assembly" on page 631
- "Installing the system-board assembly" on page 633

W.3048006 [W.3048006] UEFI has booted from the backup flash bank due to an Automatic Boot Recovery (ABR) event.

Explanation: Automated Boot Recovery, Booting Backup UEFI Image

Severity: Warning

User response: Complete the following steps:

1. Check the IBM support site for an applicable service bulletin or firmware update that applies to this error.
2. Update the primary UEFI image.
3. Replace the system board.

Related Links:

- "Updating firmware and device drivers" on page 21
- "Removing the system-board assembly" on page 631
- "Installing the system-board assembly" on page 633

W.305000A [W.305000A] An invalid date and time have been detected.

Explanation: RTC Date and Time Incorrect

Severity: Warning

User response: Complete the following steps:

1. Check IMM/chassis event log. This event should immediately precede 0068002 error. Resolve that event or any other battery related errors.
2. Use F1 Setup to reset date and time. If problem returns after a system reset, replace CMOS battery.
3. If problem persists then check the IBM support site for an applicable service bulletin or firmware update that applies to this error.
4. Replace the system board.

Related Links:

- "Removing the CMOS battery" on page 587
- "Installing the CMOS battery" on page 588
- "Updating firmware and device drivers" on page 21
- "Using the Setup utility" on page 25
- "Removing the system-board assembly" on page 631
- "Installing the system-board assembly" on page 633

W.3058009 [W.3058009] DRIVER HEALTH PROTOCOL: Missing Configuraiton. Requires Change Settings From F1.

Explanation: DRIVER HEALTH PROTOCOL: Missing Configuration. Requires Change Settings From F1

Severity: Warning

User response: Complete the following steps:

1. Go to the Setup Utility (System Settings -> Settings -> Driver Health Status List) and find a driver/controller reporting Configuration Required status.
2. Search for the driver menu from System Settings and change settings appropriately.
3. Save settings and restart system.

Related Links:

- "Using the Setup utility" on page 25

W.305800A [W.305800A] DRIVER HEALTH PROTOCOL: Reports 'Failed' Status Controller.

Explanation: DRIVER HEALTH PROTOCOL: Reports 'Failed' Status Controller

Severity: Warning

User response: Complete the following steps:

1. Reboot the system.
2. If problem persists, switch to backup UEFI or update the current UEFI image.
3. Replace the system board.

Related Links:

- "Updating firmware and device drivers" on page 21
- "Removing the system-board assembly" on page 631
- "Installing the system-board assembly" on page 633

W.305800B [W.305800B] DRIVER HEALTH PROTOCOL: Reports 'Reboot' Required Controller.

Explanation: DRIVER HEALTH PROTOCOL: Reports 'Reboot' Required Controller

Severity: Warning

User response: Complete the following steps:

1. No action required. The system will reboot at the end of POST.
2. If the problem persists, switch to the backup UEFI image or update the current UEFI image.
3. Replace the system board.

Related Links:

- “Updating firmware and device drivers” on page 21
- “Removing the system-board assembly” on page 631
- “Installing the system-board assembly” on page 633

W.305800C [W.305800C] DRIVER HEALTH PROTOCOL: Reports 'System Shutdown' Required Controller.

Explanation: DRIVER HEALTH PROTOCOL: Reports 'System Shutdown' Required Controller

Severity: Warning

User response: Complete the following steps:

1. Reboot the system.
2. If problem persists, switch to the backup UEFI image or update the current UEFI image.
3. Replace system board.

Related Links:

- “Updating firmware and device drivers” on page 21
- “Removing the system-board assembly” on page 631
- “Installing the system-board assembly” on page 633

W.305800D [W.305800D] DRIVER HEALTH PROTOCOL: Disconnect Controller Failed. Requires 'Reboot'.

Explanation: DRIVER HEALTH PROTOCOL: Disconnect Controller Failed. Requires 'Reboot'

Severity: Warning

User response: Complete the following steps:

1. Reboot the system to reconnect the controller.
2. If problem persists, switch to the backup UEFI image or update the current UEFI image.
3. Replace the system board.

Related Links:

- “Updating firmware and device drivers” on page 21
- “Removing the system-board assembly” on page 631
- “Installing the system-board assembly” on page 633

W.305800E [W.305800E] DRIVER HEALTH PROTOCOL: Reports Invalid Health Status Driver.

Explanation: DRIVER HEALTH PROTOCOL: Reports Invalid Health Status Driver

Severity: Warning

User response: Complete the following steps:

1. Reboot the system.
2. If problem persists, switch to the backup UEFI image or update the current UEFI image.
3. Replace the system board.

Related Links:

- “Updating firmware and device drivers” on page 21
- “Removing the system-board assembly” on page 631
- “Installing the system-board assembly” on page 633

W.3808000 [W.3808000] An IMM communication failure has occurred.

Explanation: IMM Communication Failure

Severity: Warning

User response: Complete the following steps:

1. Reset the IMM from the CMM.
2. Use the CMM to remove auxilliary power from the compute node. This will reboot the compute node.
3. Check the IBM support site for an applicable service bulletin or firmware update that applies to this error.
4. Update the UEFI Firmware.
5. Replace the system board.

Related Links:

- "Updating firmware and device drivers" on page 21
- "Removing the system-board assembly" on page 631
- "Installing the system-board assembly" on page 633

W.3808002 [W.3808002] An error occurred while saving UEFI settings to the IMM.

Explanation: Error Updating System Configuration to IMM

Severity: Warning

User response: Complete the following steps:

1. Use the Setup Utility to verify and save the settings (which will recover the settings).
2. Reset the IMM from the CMM.
3. Use CMM to remove auxilliary power from the compute node. This will reboot the compute node.
4. Check the IBM support site for an applicable service bulletin or firmware update that applies to this error.
5. Update the IMM Firmware.
6. Remove and re-install CMOS battery for 30 seconds to clear CMOS contents.
7. Replace the system board.

Related Links:

- "Removing the CMOS battery" on page 587
- "Installing the CMOS battery" on page 588
- "Updating firmware and device drivers" on page 21
- "Removing the system-board assembly" on page 631
- "Installing the system-board assembly" on page 633

W.3808003 .[W.3808003] Unable to retrieve the system configuration from the IMM.

Explanation: Error Retrieving System Configuration from IMM

Severity: Warning

User response: Complete the following steps:

1. Use the Setup Utility to verify and save the settings (which will recover the settings).
2. Reset the IMM from the CMM.
3. Use CMM to remove auxilliary power from the compute node. This will reboot the compute node.
4. Check the IBM support site for an applicable service bulletin or firmware update that applies to this error.
5. Update the IMM Firmware.
6. Remove and re-install CMOS battery for 30 seconds to clear CMOS contents.
7. Replace the system board.

Related Links:

- "Removing the CMOS battery" on page 587

- "Installing the CMOS battery" on page 588
- "Updating firmware and device drivers" on page 21
- "Using the Setup utility" on page 25
- "Removing the system-board assembly" on page 631
- "Installing the system-board assembly" on page 633

W.3818005 [W.3818005] The CRTM flash driver could not successfully flash the staging area. The update was aborted

Explanation: CRTM Update Aborted

Severity: Warning

User response: Complete the following steps:

1. Continue booting system. If system does not reset, manually reset the system.
2. If the error is not reported on the subsequent boot, no additional recovery action is required.
3. If the event persists, continue booting system and update the UEFI image.
4. Replace the system board.

Related Links:

- "Updating firmware and device drivers" on page 21
- "Removing the system-board assembly" on page 631
- "Installing the system-board assembly" on page 633

W.3868001 [W.3868001] BOFM: Reset loop avoided - Multiple resets not allowed.

Explanation: BOFM: Reset loop avoided - Multiple resets not allowed

Severity: Warning

User response: Complete the following steps:

1. Update all firmware (including adapter firmware) to the latest levels.
2. If problem persists, contact Support.

Related Links:

- "Updating firmware and device drivers" on page 21

W.3868002 [W.3868002] BOFM: Error communicating with the IMM - BOFM may not be deployed correctly.

Explanation: BOFM: Error communicating with the IMM - BOFM may not be deployed correctly

Severity: Warning

User response: Complete the following steps:

1. Update all firmware (including adapter firmware) to the latest levels.
2. If problem persists, contact Support.

Related Links:

- "Updating firmware and device drivers" on page 21
- "Removing the system-board assembly" on page 631
- "Installing the system-board assembly" on page 633

W.3938002 [W.3938002] A boot configuration error has been detected.

Explanation: Boot Configuration Error

Severity: Warning

User response: Complete the following steps:

1. F1 Setup -> Save Settings.

2. Retry the configuration update.

Related Links:

- "Using the Setup utility" on page 25

W.50001 [W.50001] A DIMM has been disabled due to an error detected during POST.

Explanation: DIMM Disabled

Severity: Warning

User response: Complete the following steps:

1. If the DIMM was disabled because of a memory fault, follow the procedure for that event.
2. If no memory fault is recorded in the logs and no DIMM connector error LEDs are lit, re-enable the DIMM through the Setup utility or the Advanced Settings Utility (ASU).
3. If the problem persists, Power cycle the compute node from the management console.
4. Reset the IMM to default settings.
5. Reset UEFI to default settings.
6. Update IMM and UEFI firmware.
7. Replace the system board.

Related Links:

- "Updating firmware and device drivers" on page 21
- "Removing the system-board assembly" on page 631
- "Installing the system-board assembly" on page 633

W.58001 [W.58001] The PFA Threshold limit (correctable error logging limit) has been exceeded on DIMM number % at address %. MC5 Status contains % and MC5 Misc contains %.

Explanation: DIMM PFA Threshold Exceeded

Severity: Warning

User response: Complete the following steps:

1. Prior to replacing memory DIMM, refer to TIP H212154 for minimum code level.
2. If the compute node has recently been installed, moved, serviced, or upgraded, verify that the DIMM is properly seated and visually verify that there is no foreign material in any DIMM connector on that memory channel. If either of these conditions is found, correct and retry with the same DIMM. (Note: The event Log might contain a recent 00580A4 event denoting detected change in DIMM population that could be related to this problem.)
3. Check the IBM support site for an applicable firmware update that applies to this memory error. The release notes will list the known problems the update addresses.
4. If the previous steps do not resolve the problem, at the next maintenance opportunity, replace the affected DIMM (as indicated by LightPath and/or failure log entry).
5. If PFA re-occurs on the same DIMM connector, swap the other DIMMs on the same memory channel one at a time to a different memory channel or processor. If PFA follows a moved DIMM to any DIMM connector on the different memory channel, replace the moved DIMM.
6. Check the IBM support site for an applicable Service Bulletins (Service bulletins) that applies to this memory error. (Link to IBM support service bulletins)
7. If problem continues to re-occur on the same DIMM connector, inspect DIMM connector for foreign material and remove, if found. If connector is damaged, replace system board.
8. Remove the affected processor and inspect the processor socket pins for damaged or mis-aligned pins. If damage is found or the processor is an upgrade part, replace the system board.
9. Replace affected processor.
10. Replace the system board.

Related Links:

- "Removing a DIMM" on page 589

- "Installing a DIMM" on page 591
- "Removing a microprocessor and heat sink" on page 615
- "Installing a microprocessor and heat sink" on page 621
- "Removing the system-board assembly" on page 631
- "Installing the system-board assembly" on page 633

W.58007 [W.58007] Invalid memory configuration (Unsupported DIMM Population) detected. Please verify memory configuration is valid.

Explanation: Unsupported DIMM Population

Severity: Warning

User response: Complete the following steps:

1. This event could follow an uncorrectable memory error or failed memory test. Check the log and resolve that event first. DIMMs disabled by other errors or actions could cause this event.
2. Ensure that the DIMM connectors are populated in the correct sequence.

Related Links:

- "Removing a DIMM" on page 589
- "Installing a DIMM" on page 591

W.580A1 [W.580A1] Invalid memory configuration for Mirror Mode. Please correct memory configuration.

Explanation: Unsupported DIMM Population for Mirror Mode

Severity: Warning

User response: Complete the following steps:

1. If a DIMM connector error LED is lit, resolve the failure.
2. Make sure that the DIMM connectors are correctly populated for mirroring mode.

Related Links:

- "Removing a DIMM" on page 589
- "Installing a DIMM" on page 591

W.580A2 [W.580A2] Invalid memory configuration for Sparing Mode. Please correct memory configuration.

Explanation: Unsupported DIMM Population for Spare Mode

Severity: Warning

User response: Complete the following steps:

Make sure that the DIMM connectors are correctly populated for sparing mode.

Related Links:

- "Removing a DIMM" on page 589
- "Installing a DIMM" on page 591

W.68002 [W.68002] A CMOS battery error has been detected

Explanation: CMOS Battery Fault

Severity: Warning

User response: Complete the following steps:

1. If the system was recently installed, moved, or serviced, make sure the battery is properly seated.
2. Check the IBM support site for an applicable service bulletin or firmware update that applies to this error.
3. Replace the CMOS battery
4. Replace the system board.

Related Links:

- “Removing the CMOS battery” on page 587
- “Installing the CMOS battery” on page 588
- “Removing the system-board assembly” on page 631
- “Installing the system-board assembly” on page 633

Troubleshooting by symptom

Use this information to find solutions to problems that have identifiable symptoms.

To use the symptom-based troubleshooting information in this section, complete the following steps:

1. Check the IMM event log and follow the suggested actions to resolve any event codes (see “IMM event log” on page 64).
2. Find the symptoms that you are experiencing in the troubleshooting tables in this section and follow the suggested actions to resolve any problems.
3. If the problem remains, submit a service request (see “Getting help and technical assistance,” on page 637).

Compute node start problems

Use this information to resolve compute node start problems.

Embedded hypervisor is not in the boot list

Complete the following steps until the problem is solved.

1. If the compute node has recently been installed, moved, or serviced, or if this is the first time the embedded hypervisor is being used, make sure that the device is connected properly and that there is no physical damage to the connectors.
2. Check http://www.ibm.com/systems/info/x86servers/serverproven/compat/us to validate that the embedded hypervisor device is supported for the compute node.
3. Use the Setup utility to make sure that the embedded hypervisor device (USB key) is in the startup sequence. From the Setup utility, select **Start Options**.
4. Check http://www.ibm.com for any service bulletins related to the embedded hypervisor and the compute node.
5. Make sure that other software works on the compute node to ensure that the compute node is working properly.

Connectivity problems

Use this information to solve connectivity problems.

Cannot communicate with the IBM Flex System Manager management node

Use the information in this section to troubleshoot the compute node when you cannot communicate with the IBM Flex System Manager management node on the data network.

Complete the following steps until the problem is solved:

1. Make sure that all ports for the connection path are enabled and that you can ping the IBM Flex System Manager management node. If you are unable to

ping the IBM Flex System Manager management node, see “Cannot ping the IBM Flex System Manager management node on the data network” on page 552.

2. Make sure that the protocols you are using are enabled.

   Note: By default, only secure protocols are enabled, for example, SSH and HTTPS.

3. If you cannot log into the IBM Flex System Manager management node, see “Cannot log in to the IBM Flex System Manager management node” on page 547.

Cannot communicate with the Chassis Management Module (CMM)

Use the information in this section to troubleshoot the compute node when you cannot communicate with the Chassis Management Module (CMM) on the data network.

Note: Communications errors from compute nodes can take up to 20 minutes to appear in the CMM event log.

Complete the following steps until the problem is solved:

1. Make sure that all ports in the connection path are enabled and that you can ping the CMM. If you are unable to ping the CMM, see “Cannot ping the Chassis Management Module (CMM) on the management network” on page 548.
2. Make sure that the protocols that you are using are enabled.

   Note: By default, only secure protocols are enabled, for example, SSH and HTTPS.

3. Make sure that you can log into the CMM. If you are unable to log in to the CMM, see “Cannot log in to the Chassis Management Module (CMM)” on page 548.
4. Reset the Chassis Management Module (CMM) to the default settings by pressing the reset button on the Chassis Management Module (CMM).

   Note: Press and hold the button for 10 seconds to reset the CMM configuration settings. All user modified configuration settings are reset to the factory default values.

Cannot communicate with the I/O module

Use the information in this section to troubleshoot the compute node when you cannot communicate with the I/O module.

Complete the following steps until the problem is solved:

1. Make sure that all ports in the connection path are enabled and that you can ping the I/O module. If you are unable to ping the I/O module, see “Cannot ping the I/O module” on page 551.
2. Make sure that the protocols that you are using are enabled.

   Note: By default, only secure protocols are enabled, for example, SSH and HTTPS.

3. Make sure that you can log into the I/O module. If you are unable to log into the I/O module, see “Cannot log in to the I/O module” on page 548.

4. Use a serial cable to connect to the I/O module to further isolate the problem. You can also link to the I/O module through an external Ethernet port.

One or more compute nodes are unable to communicate with SAN

Use the information in this section to troubleshoot one or more compute nodes are unable to communicate with SAN.

Complete the following steps until the problem is solved:

1. Make sure that:
   a. The I/O module is powered on and the appropriate ports are enabled on the I/O module.
   b. The CMM has reported that the I/O module has completed POST and that no errors have been reported in the logs.
   c. The SAN device is powered on and is functional.
   d. All cables between the I/O module and the SAN device are properly connected and secure, and that the activity LEDs are lit on the appropriate ports.
2. See the documentation for the I/O module for additional information about troubleshooting SAN connectivity or network connectivity issues.

Cannot connect to the data network (Ethernet)

Use the information in this section to troubleshoot the compute node when you cannot connect to the data network (Ethernet).

One compute node is unable to connect to the data network (Ethernet) during initial setup:

Use the information in this section to troubleshoot one compute node is unable to connect to the data network (Ethernet) during initial setup.

Complete the following steps until the problem is solved:

1. Make sure that:
   a. The I/O module is powered on and the appropriate ports are enabled on the I/O module.
   b. All cables between the I/O module and the network device (switch or router) are properly connected and secure, and that the activity LEDs are lit on the appropriate ports.
2. From the compute node operating system, verify the network settings, such as IP address, subnet mask (if using IPv4), DHCP settings, and vLAN settings, to ensure that the settings match the settings of the network device. See the documentation for the operating system for information about checking network settings.
3. From the compute node operating system, make sure that the network device is active. See the documentation for the operating system for information about viewing network devices.
4. Make sure that the proper device drivers are installed for the compute node Ethernet device.
5. Check the IBM support Web site for any firmware updates that might apply to this issue. You can view the release notes for a firmware update to determine the issues addressed by the update.

6. Remove the compute node from the chassis and check the connectors at the back of the node for bent pins. If the pins are bent, contact Support. See "Removing a compute node from a chassis" on page 571.
7. Install the compute node in another compute node bay to see if the problem persists. See "Installing a compute node in a chassis" on page 572. If the problem persists, make sure that this compute node is connected to a port that has been enabled and that the vLAN settings enable that port to connect to the network.
8. Check the IBM support Web site for any service bulletins that are related to network connectivity.
9. (Trained service technician only) Perform the following steps:
   a. Force the Link/duplex speed.
   b. Check the connectors on the I/O module to ensure that there are no bent pins.
   c. Check the connectors on the chassis midplane to ensure there are no bent pins. See the IBM Flex System Enterprise Chassis Types 8721, 8724, and 8725: Installation and Service Guide at http://pic.dhe.ibm.com/infocenter/flexsys/information/topic/com.ibm.acc.8721.doc/product_page.html.
   d. Remove the I/O module and install a working I/O module in the same I/O module bay.
   e. If the problem is resolved, replace the I/O module that you removed.

One compute node experiences a sudden loss of network (Ethernet) connectivity:

Use the information in this section to troubleshoot one compute node experiences a sudden loss of network (Ethernet) connectivity.

The event is logged in the event log. See the event log for the IBM Flex System Manager management node (if installed) or see the event log of the CMM to determine what actions might be required to resolve this issue. See "IMM event log" on page 64.

Two or more compute nodes are unable to connect to the data network (Ethernet) during initial setup:

Use the information in this section to troubleshoot two or more compute nodes are unable to connect to the data network (Ethernet) during initial setup.

Complete the following steps until the problem is solved:

1. If you have just updated the firmware for one or more devices in the chassis (I/O module, CMM, etc), install the previous level of firmware.
2. Make sure that:
   a. The I/O module is powered on and the appropriate ports are enabled on the I/O module.
   b. All cables between the I/O module and the network device (switch or router) are properly connected and secure, and that the activity LEDs are lit on the appropriate ports.
3. From the compute node operating system, verify the network settings, such as IP address, subnet mask (if using IPv4), DHCP settings, and vLAN settings, to ensure that the settings match the settings of the network device. See the documentation for the operating system for information about checking network settings.

4. From the compute node operating system, make sure that the network device is active. See the documentation for the operating system for information about viewing network devices.
5. Check the IBM support Web site for any firmware updates that might apply to this issue. You can view the release notes for a firmware update to determine the issues addressed by the update.
6. Check the IBM support Web site for any service bulletins that are related to network connectivity.
7. (Trained service technician only) Perform the following steps:
   a. Force the Link/duplex speed.
   b. Check the connectors on the I/O module to ensure that there are no bent pins.
   c. Check the connectors on the chassis midplane to ensure there are no bent pins. See the IBM Flex System Enterprise Chassis Types 8721, 8724, and 8725: Installation and Service Guide at http://pic.dhe.ibm.com/infocenter/flexsys/information/topic/com.ibm.acc.8721.doc/product_page.html.
   d. Remove the I/O module and install a working I/O module in the same I/O module bay.
   e. If the problem is resolved, replace the I/O module that you removed.

Two or more compute nodes experience a sudden loss of network (Ethernet) connectivity:

Use the information in this section to troubleshoot two or more compute nodes experience a sudden loss of network (Ethernet) connectivity.

The event is logged in the event log. See the event log for the IBM Flex System Manager management node (if installed) or see the event log of the CMM to determine what actions might be required to resolve this issue. See "IMM event log" on page 64.

Cannot log in

Use the information in this section to troubleshoot the compute node when you cannot log in to the management node, the Chassis Management Module (CMM), or the I/O module.

Cannot log in to the IBM Flex System Manager management node:

Use the information in this section to troubleshoot the compute node when you cannot log in to the management node.

Complete the following steps until the problem is solved:

1. Make sure that you are using the correct password and that the capitals lock is off.
2. Contact IBM Support for further assistance if you have forgotten the password.

For additional information about Login problems, see Login problems at http://pic.dhe.ibm.com/infocenter/flexsys/information/index.jsp?topic=%2Fcom.ibm.acc.8731.doc%2Ftroubleshooting_web_interface_problems.html in the "IBM Flex System Chassis Management Module User's Guide".

Cannot log in to the Chassis Management Module (CMM):

Use the information in this section to troubleshoot the compute node when you cannot log in to the Chassis Management Module (CMM).

Complete the following steps until the problem is solved:

1. Make sure that you are using the correct password and that the capitals lock is off.
2. Restore the Chassis Management Module (CMM) default settings by pressing the reset button on the Chassis Management Module (CMM).

Cannot log in to the I/O module:

Use the information in this section to troubleshoot the compute node when you cannot log in to the I/O module.

Complete the following steps until the problem is solved:

1. Make sure that you are using the correct password and that the capitals lock is off.
2. Contact IBM Support for further assistance if you have forgotten the password.

Cannot ping the Chassis Management Module (CMM) on the management network

Use the information in this section to troubleshoot the compute node when one or more compute nodes cannot ping the CMM on the management network.

Single node cannot ping the Chassis Management Module (CMM) in the same chassis:

Use the information in this section to troubleshoot a single compute node that cannot ping the Chassis Management Module (CMM) on the management network in the same chassis.

Complete the following steps until the problem is solved:

1. Make sure that the chassis management module is powered on and the applicable ports are enabled on the Chassis Management Module (CMM).
2. Make sure that the compute node IMM has acquired an IP address from the Chassis Management Module (CMM) by using the Setup utility on the node.

   Note: If the Chassis Management Module (CMM) recently lost connection to the DCHP server, you must reset the IMM by using the Chassis Management Module (CMM) interface so that a new IP address can be acquired.
3. In the Chassis Management Module (CMM) user interface, click **Chassis Management > Component IP Configuration** and make sure that the IP address that is listed is the same as the IP address that is displayed in the Setup utility. If it is not the same IP address, configure the IMM network settings correctly or reset the IMM to automatically acquire a new IP address.
4. Check http://www.ibm.com/supportportal for any firmware updates that might apply to this problem. You can view the release notes for a firmware update to determine the issues that the update addresses.
5. Remove the compute node from the chassis and check the connectors on the back of the node for bent pins. If the pins are bent, contact IBM Support.

6. Install the compute node in another node bay to determine whether the problem remains. If the problem remains, make sure that the compute node is connected to a port that has been enabled and that the vLAN settings allow that port to connect to the network.
7. Check http://www.ibm.com/supportportal for any service bulletins that are related to network connectivity.
8. (Trained service technician only) Complete the following steps:
   a. Force the link/duplex speed.
   b. Check the connectors on the I/O module to make sure that no pins are bent.
   c. Check the connectors on the chassis midplane to make sure that no pins are bent.
   d. Remove the Chassis Management Module (CMM) and install a working Chassis Management Module (CMM) in the same bay.
   e. If the problem is solved, replace the Chassis Management Module (CMM) that you removed.

Multiple nodes cannot ping the Chassis Management Module (CMM) in the same chassis:

Use the information in this section to troubleshoot multiple nodes that cannot ping the Chassis Management Module (CMM) on the management network in the same chassis.

Complete the following steps until the problem is solved:

1. Make sure that the chassis management module is powered on and the applicable ports are enabled on the Chassis Management Module (CMM). If the Chassis Management Module (CMM) is hung, reset the Chassis Management Module (CMM).
2. Reset the Chassis Management Module (CMM).
3. Check for firmware updates for the Chassis Management Module (CMM).
4. Reset the Chassis Management Module (CMM) to factory defaults and attempt to discover the nodes again. Allow enough time for the IMMs to acquire a network address.
5. Replace the Chassis Management Module (CMM).
6. Make sure that the compute node IMM has acquired an IP address from the Chassis Management Module (CMM) by using the Setup utility on the node.

   Note: If the Chassis Management Module (CMM) recently lost connection to the DCHP server, you must reset the IMM by using the Chassis Management Module (CMM) interface so that a new IP address can be acquired.
7. In the Chassis Management Module (CMM) user interface, click **Chassis Management > Component IP Configuration** and make sure that the IP address that is listed is the same as the IP address that is displayed in the Setup utility. If it is not the same IP address, configure the IMM network settings correctly or reset the IMM to automatically acquire a new IP address.
8. Check http://www.ibm.com/supportportal for any firmware updates that might apply to this problem. You can view the release notes for a firmware update to determine the issues that the update addresses.
9. Remove the compute node from the chassis and check the connectors on the back of the node for bent pins. If the pins are bent, contact IBM Support.

10. Check http://www.ibm.com/supportportal for any service bulletins that are related to network connectivity.
11. (Trained service technician only) Complete the following steps:
    a. Force the link/duplex speed.
    b. Check the connectors on the Chassis Management Module (CMM) to make sure that no pins are bent.
    c. Check the connectors on the chassis midplane to make sure that no pins are bent.
    d. Remove the Chassis Management Module (CMM) and install a working Chassis Management Module (CMM) in the same bay.
    e. If the problem is solved, replace the Chassis Management Module (CMM) that you removed.

Chassis Management Module (CMM) cannot ping the Chassis Management Module (CMM) in a different chassis:

Use the information in this section to troubleshoot a Chassis Management Module (CMM) that cannot ping the Chassis Management Module (CMM) in a different chassis.

Complete the following steps until the problem is solved:

1. Make sure that the chassis management modules are powered on and the applicable ports are enabled.
    a. If the Chassis Management Module (CMM) is powered on and hung, reset the Chassis Management Module (CMM).
    b. Make sure that the IMM, the management node, and the Chassis Management Module (CMM)s are all on the same subnet.
2. Verify that the cables between the Chassis Management Module (CMM)s and the top-of-rack switch are correctly connected and that the activity LEDs are lit on the applicable ports.
3. Make sure that the management node has a correct IP address and is on the same subnet as the Chassis Management Module (CMM)s.
4. Make sure that the compute node IMM has acquired an IP address from the Chassis Management Module (CMM) by using the Setup utility on the node.

    Note: If the Chassis Management Module (CMM) recently lost connection to the DCHP server, you must to reset the IMM by using the Chassis Management Module (CMM) interface so that a new IP address can be acquired.
5. In the Chassis Management Module (CMM) user interface, click **Chassis Management > Component IP Configuration** and make sure that the IP address that is listed is the same as the IP address that is displayed in the Setup utility. If it is not the same IP address, configure the IMM network settings correctly or reset the IMM to automatically acquire a new IP address.
6. Check http://www.ibm.com/supportportal for any firmware updates that might apply to this problem. You can view the release notes for a firmware update to determine the issues that the update addresses.
7. Check http://www.ibm.com/supportportal for any service bulletins that are related to network connectivity.
8. Remove the compute node from the chassis and check the connectors on the back of the node and on the midplane for bent pins. If the pins are bent, contact IBM Support.
9. (Trained service technician only) Complete the following steps:

a. Force the link/duplex speed.
b. Check the connectors on the nodes and on the midplane to make sure that no pins are bent.
c. Replace the I/O expansion card in the management node.
d. Replace the management node.

Cannot ping the I/O module

Use the information in this section to troubleshoot the compute node when one or more compute nodes cannot ping the I/O module.

Single node cannot ping the I/O module:

Use the information in this section to troubleshoot a single compute node that cannot ping the I/O module.

Complete the following steps until the problem is solved:

1. If you have recently updated the firmware for one or more devices in the chassis (I/O module) and have verified the network settings, install the previous level of firmware.
2. Make sure that the I/O module is powered on and the applicable ports are enabled on the I/O module.
3. Make sure that all network cables are correctly connected and that the activity LEDs are lit. If the cables are correctly connected and the LEDs are not lit, replace the cable.
4. Check http://www.ibm.com/supportportal for any firmware updates that might apply to this problem. You can view the release notes for a firmware update to determine the issues that are addressed by the update.
5. Remove the node from the chassis and check the connectors at the back of the node for bent pins. If the pins are bent, go to http://www.ibm.com/supportportal to submit a service request.
6. Install the compute node in another node bay, if one is available. If the problem remains, make sure that the compute node is connected to a port that has been enabled and that the vLAN settings allow that port to connect to the network.
7. Check http://www.ibm.com/supportportal for any service bulletins that are related to I/O-module connectivity.
8. If the problem remains, replace the I/O module, and go to http://www.ibm.com/supportportal to submit a service request.
9. (Trained service technician only) Complete the following steps:
   a. Force the link/duplex speed.
   b. Check the connectors on the I/O module to make sure that no pins are bent.
   c. Check the connectors on the chassis midplane to make sure that no pins are bent.
   d. Remove the I/O module and install a working I/O module in the same I/O bay.
   e. If the problem is solved, replace the I/O module that you removed.

Multiple nodes cannot ping the I/O module:

Use the information in this section to troubleshoot multiple nodes that cannot ping the I/O module.

Complete the following steps until the problem is solved:

1. If you have recently updated the firmware for one or more devices in the chassis (I/O module or CMM), install the previous level of firmware.
2. Make sure that the I/O module is powered on and the applicable ports are enabled on the I/O module.
3. Make sure that all network cables are correctly connected and that the activity LEDs are lit.
4. From the compute node operating system, verify that the network device is active. Check also the network settings, such as IP address, subnet mask (if you are using IPv4), DNS, DHCP settings, and vLAN settings to make sure that the settings match the settings of the network device. See the documentation that comes with the operating system for information about viewing network devices and checking the network settings.
5. Check http://www.ibm.com/supportportal for any firmware updates that might apply to this problem. You can view the release notes for a firmware update to determine the issues that are addressed by the update.
6. Check http://www.ibm.com/supportportal for any service bulletins that are related to network connectivity.
7. (Trained service technician only) Complete the following steps:
   a. Force the link/duplex speed.
   b. Check the connectors on the I/O module to make sure that no pins are bent.
   c. Check the connectors on the chassis midplane to make sure that no pins are bent.
   d. Remove the I/O module and install a working I/O module in the same I/O bay.
   e. If the problem is solved, replace the I/O module that you removed.

Cannot ping the IBM Flex System Manager management node on the data network

Use the information in this section to troubleshoot the compute node when one or more compute nodes cannot ping the management node on the data network.

Single node cannot ping the management node in the same chassis:

Use the information in this section to troubleshoot a single compute node that cannot ping the IBM Flex System Manager management node in the same chassis on the data network.

Complete the following steps until the problem is solved:

1. Make sure that the management node is powered on and is not hung, by logging in to the management node. If you are unable to log in from the management network, attempt to log in from the data network. If the management node is powered on and hung, perform a virtual reseat of the management node from the Chassis Management Module (CMM).
2. Make sure that the I/O module is powered on and is not hung, by pinging the I/O module from the management node. If the I/O module is powered on and hung, reset the I/O module. Make sure that the correct ports are enabled for the node on the I/O module.
3. Make sure that the compute node is the only one in the chassis that the management node cannot ping. If it is not, follow the steps in "Multiple nodes cannot ping the management node in the same chassis" on page 553.

4. Make sure that the configuration settings in the node are correct and that the port is enabled.
5. Check http://www.ibm.com/supportportal for any firmware updates that might apply to this issue. You can view the release notes for a firmware update to determine the issues that are addressed by the update.
6. Check http://www.ibm.com/supportportal for any service bulletins that are related to network connectivity.
7. Remove the compute node and make sure that the connectors on the midplane and the node are not damaged.
8. (Trained service technician only) Complete the following steps:
   a. Force the link/duplex speed.
   b. Check the connectors on the node and the midplane to make sure that no pins are bent.

Single node cannot ping the management node in a different chassis:

Use the information in this section to troubleshoot a single compute node that cannot ping the IBM Flex System Manager management node in a different chassis on the data network.

Complete the following steps until the problem is solved:

1. Make sure that the management node is powered on and is not hung, by logging in to the management node. If you are unable to log in from the management network, attempt to log in from the data network. If the management node is powered on and hung, perform a virtual reseat of the management node from the Chassis Management Module (CMM).
2. Make sure that the I/O module is powered on and is not hung, by pinging the I/O module from the management node. If the I/O module is powered on and hung, reset the I/O module. Make sure that the correct ports are enabled for the node on the I/O module.
3. Make sure that the compute node is the only one in the chassis that the management node cannot ping. If it is not, follow the steps in "Multiple nodes cannot ping the management node in the same chassis."
4. Make sure that the IP configuration settings on the node are correct and that the port is enabled.
5. Check http://www.ibm.com/supportportal for any firmware updates that might apply to this issue. You can view the release notes for a firmware update to determine the issues that are addressed by the update.
6. Check http://www.ibm.com/supportportal for any service bulletins that are related to network connectivity.
7. Remove the compute node and make sure that the connectors on the midplane and the node are not damaged.
8. (Trained service technician only) Complete the following steps:
   a. Force the link/duplex speed.
   b. Check the connectors on the node and the midplane to make sure that no pins are bent.

Multiple nodes cannot ping the management node in the same chassis:

Use the information in this section to troubleshoot multiple nodes that cannot ping the IBM Flex System Manager management node in the same chassis on the data network.

Complete the following steps until the problem is solved:

1. Make sure that the management node is powered on and is not hung, by logging in to the management node. If you are unable to log in from the management network, attempt to log in from the data network. If the management node is powered on and hung, perform a virtual reseat of the management node from the Chassis Management Module (CMM).
2. Make sure that the I/O module is powered on and is not hung, by pinging the I/O module from the management node. If the I/O module is powered on and hung, reset the I/O module. Make sure that the correct ports are enabled for the node on the I/O module.
3. Make sure that the management network port (eth1) is enabled in the management node. Make sure that the port configuration settings are correct for the data network.
4. Make sure that the configuration settings for each node are correct and that the data network ports are enabled.
5. Make sure that the configuration settings in the I/O module are correct and that the appropriate ports are enabled for your compute nodes and the management node on the I/O module. If the problem remains, complete the following steps:
   a. Restart the I/O module.
   b. Check http://www.ibm.com/supportportal for any firmware updates that might apply to this issue. You can view the release notes for a firmware update to determine the issues that are addressed by the update.
   c. Perform a virtual reseat of the I/O module.
   d. Replace the I/O module.
6. Check http://www.ibm.com/supportportal for any service bulletins that are related to network connectivity.
7. Remove the management node and make sure that the connectors on the midplane and the management node are not damaged.
8. (Trained service technician only) Complete the following steps:
   a. Force the link/duplex speed.
   b. Check the connectors on the nodes and the midplane to make sure that no pins are bent.
   c. Replace the I/O expansion card in the management node.

Multiple nodes cannot ping the management node in a different chassis:

Use the information in this section to troubleshoot multiple nodes that cannot ping the IBM Flex System Manager management node in a different chassis on the data network.

Complete the following steps until the problem is solved:

1. Make sure that the management node is powered on and is not hung, by logging in to the management node. If you are unable to log in from the management network, attempt to log in from the data network. If the management node is powered on and hung, perform a virtual reseat of the management node from the Chassis Management Module (CMM).
2. Make sure that the I/O module is powered on and is not hung, by pinging the I/O module from the management node. If the I/O module is powered on and hung, reset the I/O module. Make sure that the correct ports are enabled for the node on the I/O module.

3. Make sure that the management network port (eth1) in the management node is enabled. Make sure that the port configuration settings are correct for the data network.
4. Make sure that the configuration settings for each node are correct and that the data network ports are enabled.
5. Make sure that the configuration settings in the I/O module are correct and that the applicable ports are enabled for your compute nodes and the management node on the I/O module. If the problem remains, complete the following steps:
   a. Restart the I/O module.
   b. Check http://www.ibm.com/supportportal for any firmware updates that might apply to this issue. You can view the release notes for a firmware update to determine the issues that are addressed by the update.
   c. Perform a virtual reseat of the I/O module.
   d. Replace the I/O module.
6. Check http://www.ibm.com/supportportal for any service bulletins that are related to network connectivity.
7. Remove the management node and make sure that the connectors on the midplane and the node are not damaged.
8. (Trained service technician only) Complete the following steps:
   a. Force the link/duplex speed.
   b. Check the connectors on the nodes and the midplane to make sure that no pins are bent.
   c. Replace the I/O expansion card in the management node.

Multiple nodes cannot ping the management node in the same chassis or a different chassis:

Use the information in this section to troubleshoot multiple nodes that cannot ping the IBM Flex System Manager management node in the same chassis or a different chassis on the data network.

Complete the following steps until the problem is solved:

1. Follow the steps in "Multiple nodes cannot ping the management node in the same chassis" on page 553.
2. Follow the steps in "Multiple nodes cannot ping the management node in a different chassis" on page 554.

Cannot ping the IBM Flex System Manager management node on the management network

Use the information in this section to troubleshoot the compute node when one or more compute nodes cannot ping the management node on the management network.

Single node cannot ping the management node in the same chassis:

Use the information in this section to troubleshoot a single compute node that cannot ping the IBM Flex System Manager management node in the same chassis on the management network.

Complete the following steps until the problem is solved:

1. Make sure that the management node is powered on and is not hung, by logging in to the management node. If you are unable to log in from the management network, attempt to log in from the data network. If the management node is powered on and hung, perform a virtual reseat of the management node from the Chassis Management Module (CMM).
2. Make sure that the Chassis Management Module (CMM) is powered on and is not hung, by pinging the Chassis Management Module (CMM) from the management node. If the Chassis Management Module (CMM) is powered on and hung, reset the Chassis Management Module (CMM). Make sure that the IMM, the management node, and Chassis Management Module (CMM) are all on the same subnet.
3. Make sure that the compute node is the only one in the chassis that the management node cannot ping. If it is not, follow the steps in "Multiple nodes cannot ping the management node in the same chassis" on page 557. Make sure that the compute node appears on the chassis map (it might not be fully discovered by the management node software).
4. Make sure that the system-management processor in each compute node has a valid IP address by checking the chassis map of the remote chassis.

   Note: If the Chassis Management Module (CMM) recently lost connection to the DCHP server, you must reset the IMM by using the Chassis Management Module (CMM) interface so that a new IP address can be acquired.
5. In the Chassis Management Module (CMM) user interface, click **Chassis Management > Component IP Configuration** and make sure that the IP address that is listed is the same as the IP address that is displayed in the Setup utility. If it is not the same, configure the IMM network settings correctly.
6. Check http://www.ibm.com/supportportal for any firmware updates that might apply to this issue. You can view the release notes for a firmware update to determine the issues that are addressed by the update.
7. Check http://www.ibm.com/supportportal for any service bulletins that are related to network connectivity.
8. Remove the compute node and make sure that the connectors on the midplane and the node are not damaged.
9. (Trained service technician only) Complete the following steps:
   a. Force the link/duplex speed.
   b. Check the connectors on the node and the midplane to make sure that no pins are bent.
   c. Replace the system-board assembly (see "Removing the system-board assembly" on page 631 and "Installing the system-board assembly" on page 633).

Single node cannot ping the management node in a different chassis:

Use the information in this section to troubleshoot a single compute node that cannot ping the IBM Flex System Manager management node in a different chassis on the management network.

Complete the following steps until the problem is solved:

1. Make sure that the management node is powered on and is not hung, by logging in to the management node. If you are unable to log in from the management network, attempt to log in from the data network. If the management node is powered on and hung, perform a virtual reseat of the management node from the Chassis Management Module (CMM).

2. Make sure that the Chassis Management Module (CMM) is powered on and is not hung, by pinging the Chassis Management Module (CMM) from the management node:
   a. If the Chassis Management Module (CMM) is powered on and hung, reset the Chassis Management Module (CMM)
   b. Make sure that the IMM, the management node, and Chassis Management Module (CMM) are all on the same subnet.
3. Make sure that the compute node is the only one in the chassis that the management node cannot ping. If it is not, follow the steps in "Multiple nodes cannot ping the management node in the same chassis." Make sure that the compute node appears on the chassis map (it might not be fully discovered by the management node software).
4. Make sure that the IMM has acquired an IP address from the Chassis Management Module (CMM) by using the Setup utility on the compute node.

   Note: If the Chassis Management Module (CMM) recently lost connection to the DCHP server, you must reset the IMM by using the Chassis Management Module (CMM) interface so that a new IP address can be acquired.
5. Make sure that the system-management processor in each compute node has a valid IP address by checking the chassis map of the remote chassis.

   Note: If the Chassis Management Module (CMM) recently lost connection to the DCHP server, you must reset the IMM by using the Chassis Management Module (CMM) interface so that a new IP address can be acquired.
6. Check http://www.ibm.com/supportportal for any firmware updates that might apply to this issue. You can view the release notes for a firmware update to determine the issues that are addressed by the update.
7. Check http://www.ibm.com/supportportal for any service bulletins that are related to network connectivity.
8. Remove the compute node and make sure that the connectors on the midplane and the node are not damaged.
9. (Trained service technician only) Check the connectors on the node and the midplane to make sure that no pins are bent.

Multiple nodes cannot ping the management node in the same chassis:

Use the information in this section to troubleshoot multiple nodes that cannot ping the IBM Flex System Manager management node in the same chassis on the management network.

Complete the following steps until the problem is solved:

1. Make sure that the management node is powered on and is not hung, by logging in to the management node. If you are unable to log in from the management network, attempt to log in from the data network. If the management node is powered on and hung, perform a virtual reseat of the management node from the Chassis Management Module (CMM).
2. Make sure that the Chassis Management Module (CMM) is powered on and is not hung, by pinging the Chassis Management Module (CMM) from the management node:
   a. If the Chassis Management Module (CMM) is powered on and hung, reset the Chassis Management Module (CMM).
   b. Make sure that the IMM, the management node, and Chassis Management Module (CMM) are all on the same subnet.

3. Make sure that the management network port (eth0) in the management node is enabled.
4. Make sure that the management node has an IP address, is on the same subnet as the Chassis Management Module (CMM), and is able to ping the Chassis Management Module (CMM).
5. Make sure that the system-management processor in each compute node has a valid IP address by checking the chassis map of the remote chassis.

   Note: If the Chassis Management Module (CMM) recently lost connection to the DCHP server, you must reset the IMM by using the Chassis Management Module (CMM) interface so that a new IP address can be acquired.
   If a system-management processor does not have a valid IP address, complete the following steps:
   a. Restart the Chassis Management Module (CMM).
   b. Check http://www.ibm.com/supportportal for any firmware or software updates that might apply to this issue. You can view the release notes for a firmware update to determine the issues that are addressed by the update.
   c. Remove and reinstall Chassis Management Module (CMM).
   d. Replace the Chassis Management Module (CMM).
6. Check http://www.ibm.com/supportportal for any service bulletins that are related to network connectivity.
7. Remove the management node and make sure that the connectors on the midplane and the management node are not damaged.
8. (Trained service technician only) Complete the following steps:
   a. Force the link/duplex speed.
   b. Check the connectors on the nodes and the midplane to make sure that no pins are bent.
   c. Replace the I/O expansion card in the management node.
   d. Replace the management node.

Multiple nodes cannot ping the management node in a different chassis:

Use the information in this section to troubleshoot multiple nodes that cannot ping the IBM Flex System Manager management node in a different chassis on the management network.

Complete the following steps until the problem is solved:

1. Make sure that the management node is powered on and is not hung, by logging in to the management node. If you are unable to log in from the management network, attempt to log in from the data network. If the management node is powered on and hung, perform a virtual reseat of the management node from the Chassis Management Module (CMM).
2. Make sure that the Chassis Management Module (CMM) is powered on and is not hung by pinging the Chassis Management Module (CMM) from the management node:
   a. If the Chassis Management Module (CMM) is powered on and hung, reset the Chassis Management Module (CMM).
   b. Make sure that the IMM, the management node, and the Chassis Management Module (CMM) are all on the same subnet.
3. Make sure that all cables between the CMMs and the top-of-rack switch are correctly connected and secure and that the activity LEDs are lit on the applicable ports

4. Make sure that the Chassis Management Module (CMM)s (the Chassis Management Module (CMM) in the same chassis as the management node and the Chassis Management Module (CMM) in the remote chassis) have the same subnet address and can ping one another. If they cannot, make sure that the ports on the top-of-rack switch are enabled. Attempt to connect the Chassis Management Module (CMM)s directly if possible.
5. Make sure that the management node has fully discovered the nodes within its chassis by viewing the chassis map. If it has not fully discovered the nodes, follow the steps in "Multiple nodes cannot ping the management node in the same chassis" on page 557.
6. Make sure that the management processor for each compute node has a valid IP address by checking the chassis map of the remote chassis.

   Note: If the Chassis Management Module (CMM) recently lost connection to the DCHP server, you must reset the IMM by using the Chassis Management Module (CMM) interface so that a new IP address can be acquired.
   If a system-management processor does not have a valid IP address, complete the following steps:
   a. Restart the Chassis Management Module (CMM) in the remote chassis.
   b. Check http://www.ibm.com/supportportal for any firmware or software updates that might apply to this issue. You can view the release notes for a firmware update to determine the issues that are addressed by the update.
   c. Remove and reinstall Chassis Management Module (CMM).
   d. Replace the Chassis Management Module (CMM).
7. Check http://www.ibm.com/supportportal for any service bulletins that are related to network connectivity.
8. Remove the node and make sure that the connectors on the midplane and the node are not damaged.
9. (Trained service technician only) Complete the following steps:
   a. Force the link/duplex speed.
   b. Check the connectors on the nodes and the midplane to make sure that no pins are bent.
   c. Replace the I/O expansion card in the management node.

Multiple nodes cannot ping the management node in the same chassis or a different chassis:

Use the information in this section to troubleshoot multiple nodes that cannot ping the IBM Flex System Manager management node in the same chassis or a different chassis on the management network.

Complete the following steps until the problem is solved:

1. Follow the steps in "Multiple nodes cannot ping the management node in the same chassis" on page 557.
2. Follow the steps in "Multiple nodes cannot ping the management node in a different chassis" on page 558.

Hard disk drive problems

Use this information to resolve hard disk drive problems.

Compute node fails to recognize one drive

Complete the following steps until the problem is solved.

1. Verify that the drive is supported for this compute node. See http://www.ibm.com/systems/info/x86servers/serverproven/compat/us for a list of supported hard drives.
2. Make sure that the drive is seated in the drive bay properly and that there is no physical damage to the drive connectors.
3. Run the DSA SAS Fixed Disk or SAS Attached Disk diagnostic tests (see “IBM Dynamic System Analysis” on page 66).
   a. If the drive fails the diagnostic test, replace the drive.
   b. If the drive passes the diagnostic tests but is still not recognized, complete the following steps:
      1) Replace the drive.
      2) Replace the hard drive backplane (see “Removing the hard disk drive backplane” on page 599and “Installing the hard disk drive backplane” on page 600).
      3) Replace the system-board assembly (see “Removing the system-board assembly” on page 631 and “Installing the system-board assembly” on page 633).

Intermittent problems

Use this information to solve intermittent problems.

Intermittent external device problems

Complete the following steps until the problem is solved.

1. Make sure that the correct device drivers are installed. See the manufacturer's website for documentation.
2. For a USB device:
   a. Make sure that the device is configured correctly (see “Using the Setup utility” on page 25).
   b. Connect the device to another port. If using a USB hub, remove the hub and connect the device directly to the compute node. Make sure that the device is configured correctly for the port (see “Using the Setup utility” on page 25).
   c. Run DSA Preboot USB diagnostics (see “IBM Dynamic System Analysis” on page 66).

Intermittent KVM problems

Complete the following steps until the problem is solved.

Video problems:

1. Make sure that all cables and the console breakout cable are properly connected and secure.
2. Make sure that the monitor is working properly by testing it on another compute node.
3. Test the console breakout cable on a working compute node to ensure that it is operating properly. Replace the console breakout cable if it is defective.

Keyboard problems:

Make sure that all cables and the console breakout cable are properly connected and secure.

Mouse problems:

Make sure that all cables and the console breakout cable are properly connected and secure.

Intermittent unexpected reboots

Check for an event code that indicates a reboot. See the event log for the IBM Flex System Manager management software (if installed) or see the event log of the CMM to determine what actions might be required to resolve this issue. See "IMM event log" on page 64. Some correctable errors require that the compute node reboot so that it can disable a device, such as a memory DIMM or a microprocessor to allow the machine to boot up properly.

Intermittent connectivity problems

Use this information to solve intermittent connectivity problems.

Single compute node cannot connect intermittently

Complete the following steps until the problem is solved.

1. Make sure that the network cables are correctly connected in the switch module ports and the switch module is correctly seated.
2. Update the NIC device driver, or the storage device controller device driver.
3. See the documentation for the I/O module for resolving connectivity issues.

Two or more compute nodes cannot connect intermittently

Complete the following steps until the problem is solved.

1. Using the diagnostic tools that are provided by the device manufacturer, test the I/O module that the devices are connected to.
2. Attempt to connect one compute node to the network first, and connect other compute nodes, one by one, to try to isolate the problem.
3. Update the I/O module firmware, if necessary.

   Note: Restarting the compute node and running POST diagnostics on the I/O module might also help isolate the problem; however, this might have other ramifications to the network.

Memory problems

Use this information to solve memory problems.

The amount of system memory that is displayed is less than the amount of installed physical memory

Complete the following steps until the problem is solved.

1. Make sure that:
   a. You have installed the correct type of memory (see "Installing a DIMM" on page 591).

b. Memory mirroring or memory sparring mode does not account for the discrepancy. You can check the memory configuration in the Setup utility (see "Using the Setup utility" on page 25).

2. If new memory has recently been installed, make sure that no configuration events are reported in the event log. If there are any events, resolve them.
3. If the compute node was recently installed, moved, or serviced, make sure that the DIMMs are correctly seated in the connectors (see "Installing a DIMM" on page 591).
4. Make sure that all DIMMs are enabled. The compute node might have automatically disabled a DIMM when it detected a problem, or a DIMM might have been manually disabled (see "Using the Setup utility" on page 25).
5. Run memory diagnostics (see "IBM Dynamic System Analysis" on page 66).
6. Remove DIMMs until the compute node is showing the correct amount of memory. Install one DIMM at a time until you can determine which DIMM is not working properly. Remove that DIMM and replace it with a good DIMM (see "Removing a DIMM" on page 589, and "Installing a DIMM" on page 591).

   Note: After you install or remove a DIMM, you must change and save the new configuration information by using the Setup utility. When you turn on the compute node, a message indicates that the memory configuration has changed. Start the Setup utility and select **Save Settings** (see "Using the Setup utility" on page 25 for more information) to save changes.
7. If the problem remains, contact IBM Support.

Observable problems

Use this information to solve observable problems.

Compute node is unresponsive (POST is complete and operating system is running)

Complete the following steps until the problem is solved.

If you are in the same location as the compute node, complete the following steps:

1. If you are using a KVM connection, make sure that the connection is operating correctly. Otherwise, make sure that the keyboard and mouse are operating correctly.
2. If possible, log in to the compute node and verify that all applications are running (no applications are hung).
3. Restart the compute node.
4. If the problem remains, make sure that any new software has been installed and configured correctly.
5. Contact your place of purchase of the software or your software provider.

If you are accessing the compute node from a remote location, complete the following steps:

1. Make sure that all applications are running (no applications are hung).
2. Attempt to log out of the system and log back in.
3. Validate the network access by pinging or running a trace route to the compute node from a command line.
   a. If you are unable to get a response during a ping test, attempt to ping another compute node in the chassis to determine whether it is a connection problem or compute node problem.

b. Run a trace route to determine where the connection breaks down. Attempt to resolve a connection issue with either the VPN or the point at which the connection breaks down.

4. Restart the compute node remotely through the management interface.
5. If the problem remains, verify that any new software has been installed and configured correctly.
6. Contact your place of purchase of the software or your software provider.

Unusual smell

Complete the following steps until the problem is solved.

1. An unusual smell might be coming from newly installed equipment.
2. If the problem remains, contact IBM Support.

Compute node seems to be running hot

Complete the following steps until the problem is solved.

Multiple compute nodes or chassis:

1. Make sure that the room temperature is within the specified range (see "Features and specifications" on page 4).
2. Check the IBM Flex System Manager management software (if installed) or CMM log for rising temperature events. If there are no events, the compute node is running within normal operating temperatures. Note that you can expect some variation in temperature.

Single compute node:

Check the IBM Flex System Manager management software (if installed) or CMM log for rising temperature events. If there are no events, the compute node is running within normal operating temperatures. Note that you can expect some variation in temperature.

Cracked parts or cracked chassis

Contact IBM Support.

Optional device and replaceable component installation problems

Use this information to resolve optional device and replaceable component installation problems.

External USB device not recognized

Complete the following steps until the problem is solved.

1. Make sure that the proper drivers are installed on the compute node. See the product documentation for the USB device for information about device drivers.
2. Use the Setup utility to make sure that the device is configured correctly.
3. If the USB device is plugged into a hub or the console breakout cable, unplug the device and plug it directly into the USB port on the front of the compute node.

4. Run the DSA USB diagnostic tests

PCIe adapters not recognized/functioning

Complete the following steps until the problem is solved.

1. Check the event log and resolve any issues related to the device.
2. See http://www.ibm.com/systems/info/x86servers/serverproven/compat/us to validate that the adapter is supported.
3. Make sure that the adapter is installed in a correct slot.
4. Make sure that the proper device drivers are installed for the device.
5. Resolve any resource conflicts if running legacy mode (UEFI).
6. Check http://www.ibm.com for any service bulletins.
7. Ensure any adapter external connections are correct and that the connectors are not physically damaged.

Performance problems

Use this information to solve performance problems.

Poor or slow network performance

Complete the following steps until the problem is solved.

1. Isolate which network is operating slowly (such as storage, data, and management). You might find it helpful to use ping tools or operating-system tools such as task manager or resource manager.
2. Check for traffic congestion on the network.
3. Update the NIC device driver, or the storage device controller device driver.
4. Use the traffic-diagnostic tools that are provided by the IO-module manufacturer.

Operating system performance

Complete the following steps until the problem is solved.

1. If you have recently made changes to the compute node (for example updated device drivers or installed software applications) remove the changes.
2. Check for any networking issues.
3. Check the operating system logs for performance related errors.
4. Check for events related to high temperatures and power issues as the compute node might be throttled to help with cooling. If it is throttled, reduce the workload on the compute node to help improve performance.
5. Check for events related to disabled DIMMs. If you do not have enough memory for the application workload, your operating system will have poor performance.
6. Ensure that the workload is not too high for the configuration.

Power-on problems

Use this information to resolve power-on problems.

Single node does not power on

Complete the following steps until the problem is solved.

1. If you recently installed, moved, or serviced the computer node, reseat the compute node in the bay. If the compute node was not recently installed,

moved, or serviced, perform a virtual reseat through the CMM **service** command. For more information about the CMM **service** command, see the IBM Flex System Chassis Management Module: Command-Line Interface Reference Guide at http://pic.dhe.ibm.com/infocenter/flexsys/information/topic/com.ibm.acc.cmm.doc/cli_command_service.html.

2. Check the event logs for any events that are related to the compute node, and solve them. If an IBM Flex System Manager management node is installed, check the event log on the management node. Otherwise, check the event log on the chassis management module.
3. Make sure that the Chassis Management Module (CMM) can recognize the compute node. Log in to the Chassis Management Module (CMM) user interface and verify that the compute node appears in the chassis view. If the Chassis Management Module (CMM) cannot recognize the compute node, remove the compute node and inspect the compute node and the back of the node bay to make sure there is no physical damage to the connectors.
4. Make sure that the power policy that is implemented on the Chassis Management Module (CMM) is sufficient to enable the compute node to power on. You can view the power policy from the CMM **pmpolicy** command and the CMM web interface.
   - For more information about the CMM **pmpolicy** command, see the IBM Flex System Chassis Management Module: Command-Line Interface Reference Guide at http://pic.dhe.ibm.com/infocenter/flexsys/information/topic/com.ibm.acc.cmm.doc/cli_command_pmpolicy.html.
   - From the CMM web interface, select **Power Modules and Management** from the Chassis Management menu. For more information, see the the IBM Flex System Chassis Management Module: User's Guide at http://pic.dhe.ibm.com/infocenter/flexsys/information/topic/com.ibm.acc.cmm.doc/cmm_user_guide.html. All fields and options are described in the CMM web interface online help.
5. Make sure that the IBM Flex System Manager management node has completed the discovery of the compute node. Log in to the IBM Flex System Manager user interface and verify that the compute node appears in the chassis view from the Chassis Management Module (CMM).
6. Replace the system-board assembly (see “Removing the system-board assembly” on page 631 and “Installing the system-board assembly” on page 633).

   Note: Until you are able to replace the system-board assembly, you can attempt to power on the compute node from the Chassis Management Module (CMM) or from the IBM Flex System Manager user interface.

For additional information, see UEFI Compliant Firmware on IBM System x® and BladeCenter® Servers. and the IBM Flex System Quick start guides.

Multiple nodes do not power on

Complete the following steps until the problem is solved.

1. If you recently installed, moved, or serviced the computer nodes, reseat the compute nodes in the bays. If the compute nodes were not recently installed, moved, or serviced, perform a virtual reseat through the CMM **service** command. For more information about the CMM **service** command, see the IBM Flex System Chassis Management Module: Command-Line Interface Reference Guide at http://pic.dhe.ibm.com/infocenter/flexsys/information/topic/com.ibm.acc.cmm.doc/cli_command_service.html.

2. Check the event logs for any events that are related to the compute nodes, and solve them. If an IBM Flex System Manager management node is installed, check the event log on the management node. Otherwise, check the event log on the chassis management module.

Compute node does not power off

Complete the following steps until the problem is solved.

1. Attempt to power off the compute node through the IBM Flex System Manager user interface, if an IBM Flex System Manager management node is installed. Otherwise, attempt to power off the compute node through the Chassis Management Module (CMM) user interface.
2. Attempt to restart the system-management processor for the compute node. You can restart the system-management processor through the Chassis Management Module (CMM) user interface. Click the compute node in the chassis view and then click **Restart System Mgmt Processor**. After the system-management processor has been restarted, attempt to power off the compute node from the Chassis Management Module (CMM).
3. Attempt to power off the compute node by using the power button on the front of the node.
4. Attempt to reset the compute node from the Chassis Management Module (CMM) command-line interface (CLI) by using the **reset** command.
5. Reseat the Chassis Management Module (CMM); then, perform steps 1-5 again.

Software problems

Use this information to solve software problems.

1. To determine whether the problem is caused by the software, make sure that:
   - The compute node has the minimum memory that is needed to use the software. For memory requirements, see the information that comes with the software.

     Note: If you have just installed an adapter or memory, the compute node might have a memory-address conflict.
   - The software is designed to operate on the compute node.
   - Other software works on the compute node.
   - The software works on another compute node.
2. If you receive any error messages while you use the software, see the information that comes with the software for a description of the messages and suggested solutions to the problem.
3. Contact your place of purchase of the software.

Undetermined problems

Use this information to solve undetermined problems.

Any undetermined problem

Complete the following steps until the problem is solved.

1. Check the IMM event log and follow the suggested actions to resolve any event codes (see “IMM event log” on page 64).
2. Find the symptoms that you are experiencing in the troubleshooting tables in this section and follow the suggested actions to resolve any problems.
3. If the problem remains, submit a service request (see “Getting help and technical assistance,” on page 637).

Compute nodes are not discovered by the IBM Flex System Manager management node or the CMM

Complete the following steps until the problem is solved.

1. Make sure that the compute node is recognized by the IBM Flex System Manager management node (if installed) or the CMM. It may appear as an unknown device in the chassis map. If it is not recognized, perform the following steps.
   a. Remove the compute node and inspect both the compute node and the back of the compute node bay to ensure there is no physical damage to connectors.
   b. Move the compute node to another bay.
   c. Replace the system-board assembly (see "Removing the system-board assembly" on page 631 and "Installing the system-board assembly" on page 633).
2. Make sure that the IBM Flex System Manager management node or the CMM can ping the compute nodes, if they cannot, see "Cannot ping the IBM Flex System Manager management node on the management network" on page 555.
3. If the compute nodes are in another chassis, make sure that you have the proper software entitlements to manage that chassis with the IBM Flex System Manager management node.
4. Check http://www.ibm.com/supportportal for any firmware updates that might apply to this issue. You can view the release notes for a firmware update to determine the issues that are addressed by the update.
5. Check http://www.ibm.com/supportportal for any service bulletins that are related to network connectivity.

Collecting service data

This topic provides information about collecting service data.

You can use the IBM Electronic Service Agent or the first-failure data capture (FFDA) tool to monitor, track, and capture system hardware errors and hardware and software inventory information, and report serviceable problems directly to IBM Support. You can also choose to collect data manually. Using the Electronic Service Agent or the FFDA tool, all information sent to IBM is encrypted and stored in a secure IBM database and used for improved problem determination.

- The Electronic Service Agent is integrated into the IBM Flex System Manager Service and Support Manager and is available if you have installed the IBM Flex System Manager management software. For more information about the Electronic Service Agent and how to set it up, see the documentation at http://pic.dhe.ibm.com/infocenter/flexsys/information/topic/com.ibm.acc.8731.doc/setting_up_electronic_service_agent.html.
- The FFDA tool is integrated into the IMM2. For more information about accessing the IMM2, see Chapter 4, "Accessing the IMM2," on page 43.

Chapter 7. Installing, removing, and replacing compute node components

Use this information to install, remove, and replace replaceable components and optional devices in the compute node.

See Chapter 5, "Parts listing, Types 7863, 8737, 8738, and 8956," on page 53 to determine whether a component is a consumable part, structural part, Tier 1 CRU, or Tier 2 CRU.

For information about the terms of the warranty and getting service and assistance, see the *Warranty Information* document.

Installing an optional device

Some compute node components are available as both an optional device and a replaceable component. The installation procedure is the same for the optional device and the replaceable component.

Installation guidelines

Before you remove or replace a replaceable component or install an optional device, read the following information:

- Before you begin, read "Safety" on page v and "Handling static-sensitive devices" on page 570. This information will help you work safely.
- When you install your new compute node, take the opportunity to download and apply the most recent firmware updates. This step will help to ensure that any known issues are addressed and that your compute node is ready to function at maximum levels of performance.

  To download the latest firmware and device drivers, go to and select **IBM Flex System x240 Compute Node Types 7863, 8737, 8738, and 8956.**
- Observe good housekeeping in the area where you are working. Place removed covers and other parts in a safe place.
- Back up all important data before you make changes to hard disk drives.
- Before you remove a compute node from the IBM Flex System chassis, you must shut down the operating system and turn off the compute node. You do not have to shut down the chassis itself.
- Blue on a component indicates touch points, where you can grip the component to remove it from or install it in the compute node, open or close a latch, and so on.
- For a list of supported optional devices for the compute node, see http://www.ibm.com/systems/info/x86servers/serverproven/compat/us.

System reliability guidelines

Use these guidelines to ensure that the compute node meets the cooling and system reliability requirements:

- The IBM Flex System chassis is not operated without a compute node or node bay filler in each node bay. See IBM Flex System Enterprise Chassis Types 8721, 8724, and 8725: Installation and Service Guide at http://pic.dhe.ibm.com/

© Copyright IBM Corp. 2013, 2014

infocenter/flexsys/information/topic/com.ibm.acc.8721.doc/product_page.htmlfor additional information.

- Each microprocessor socket always contains a socket cover and heat-sink filler or a microprocessor and heat sink. If the compute node has only one microprocessor, it must be installed in microprocessor socket 1.
- The air baffles are installed over the DIMM connectors.
- The ventilation holes on the compute node are not blocked.
- The compute node CMOS battery is operational. If the CMOS battery becomes defective, replace it immediately.

Handling static-sensitive devices

To reduce the possibility of damage from electrostatic discharge, observe these precautions.

Attention: Static electricity can damage the compute node and other electronic devices. To avoid damage, keep static-sensitive devices in their static-protective packages until you are ready to install them.

- When you work on a IBM Flex System chassis that has an electrostatic discharge (ESD) connector, use a wrist strap, especially when you handle modules, optional devices, or compute nodes. To work correctly, the wrist strap must have a good contact at both ends (touching your skin at one end and firmly connected to the ESD connector on the front or back of the IBM Flex System chassis).
- Limit your movement. Movement can cause static electricity to build up around you.
- Handle the device carefully, holding it by its edges or its frame.
- Do not touch solder joints, pins, or exposed circuitry.
- Do not leave the device where others can handle and damage it.
- While the device is still in its static-protective package, touch it to an *unpainted* metal part of the IBM Flex System chassis or any *unpainted* metal surface on any other grounded rack component in the rack in which you are installing the device for at least 2 seconds. This drains static electricity from the package and from your body.
- Remove the device from its package and install it directly into the compute node without setting down the device. If it is necessary to set down the device, put it back into its static-protective package. Do not place the device on the compute node cover or on a metal surface.
- Take additional care when you handle devices during cold weather. Heating reduces indoor humidity and increases static electricity.

Returning a device or component

If you are instructed to return a device or component, follow all packaging instructions, and use any packaging materials for shipping that are supplied to you.

Updating the compute node configuration

Use this information to update the compute node configuration.

When the compute node starts for the first time after you add or remove an internal device, you might receive a message that the configuration has changed.

The Setup utility automatically starts so that you can save the new configuration settings. See “Using the Setup utility” on page 25 for more information about the Setup utility.

Some devices have device drivers that you must install. See the documentation that comes with each device for information about installing device drivers.

The compute node operates as a symmetric multiprocessing (SMP) compute node, regardless of how many microprocessors are installed. For optimum performance, you must upgrade the operating system to support SMP. See Chapter 3, “Installing the operating system,” on page 39 and your operating-system documentation for additional information.

Removing a compute node from a chassis

Use this information to remove a compute node from a IBM Flex System chassis.

Before you begin

Before you remove a compute node, complete the following steps:

1. Read “Safety” on page v and “Installation guidelines” on page 569.
2. If the compute node is operating, shut down the operating system.
3. Press the power button to turn off the compute node (see “Turning off the compute node” on page 15 for more information).

Procedure

To remove the compute node from a chassis, complete the following steps:

1. Open the front handle as shown in the illustration. The compute node moves out of the node bay approximately 0.6 cm (0.25 inch).

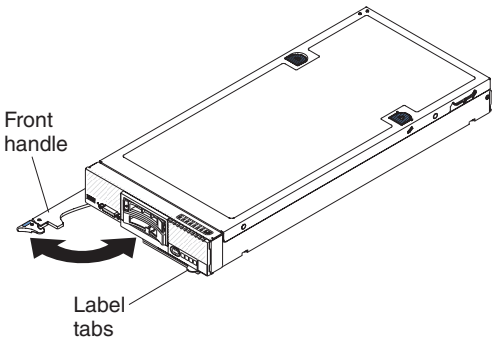

Attention:

- To maintain proper system cooling, do not operate the IBM Flex System chassis without a compute node or node bay filler installed in each node bay.
- When you remove the compute node, note the node bay number. Reinstalling a compute node into a different node bay from the one it was removed from can have unintended consequences. Some configuration information and update options are established according to node bay number. If you reinstall the compute node into a different node bay, you might have to reconfigure the compute node.

2. Pull the compute node out of the node bay.
3. Install either a node bay filler or another compute node in the node bay.

What to do next

If you are instructed to return the compute node, follow all packaging instructions, and use any packaging materials for shipping that are supplied to you.

Installing a compute node in a chassis

Use this information to install a compute node in a IBM Flex System chassis.

Before you begin

Before you install the compute node in a chassis, read "Safety" on page v and "Installation guidelines" on page 569.

Statement 21

CAUTION:
Hazardous energy is present when the compute node is connected to the power source. Always replace the compute node cover before installing the compute node.

If you are using IBM Flex System Manager management software to manage the operating system, you must have either an integrated Ethernet controller or a network interface adapter for management network communication. For a list of supported optional devices for the compute node, see http://www.ibm.com/systems/info/x86servers/serverproven/compat/us.

Procedure

To install the compute node in a chassis, complete the following steps.

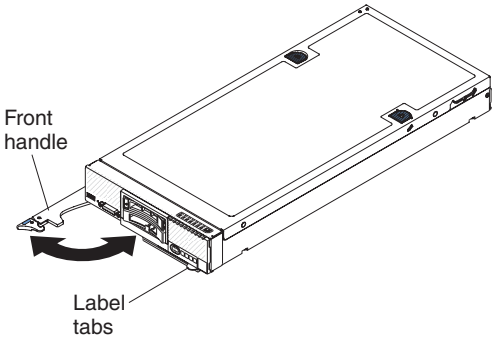

1. Select the node bay.

   Notes:

   a. If you are reinstalling a compute node that you removed, you must install it in the same node bay from which you removed it. Some compute node configuration information and update options are established according to node bay number. Reinstalling a compute node into a different node bay can have unintended consequences. If you reinstall the compute node into a different node bay, you might have to reconfigure the compute node.

b. To maintain proper system cooling, do not operate the IBM Flex System chassis without a compute node, or node bay filler in each node bay.

2. Make sure that the front handle on the compute node is in the open position.
3. Slide the compute node into the node bay until it stops.
4. Push the front handle on the front of the compute node to the closed position.

   Note: After the compute node is installed, the IMM2 in the compute node initializes and synchronizes with the Chassis Management Module. This process takes approximately 90 seconds to complete. The power LED flashes rapidly, and the power button on the compute node does not respond until this process is complete.
5. Turn on the compute node (see "Turning on the compute node" on page 14 for instructions).
6. Make sure that the power LED on the compute node control panel is lit continuously, indicating that the compute node is receiving power and is turned on.
7. If you have other compute nodes to install, do so now.
8. You can place identifying information on the label tabs that are accessible from the front of the compute node.

What to do next

If this is the initial installation of the compute node in the chassis, you must configure the compute node through the Setup utility and install the compute node operating system. See "Updating the compute node configuration" on page 570 and Chapter 3, "Installing the operating system," on page 39 for details.

If you have changed the configuration of the compute node or if you are installing a different compute node from the one that you removed, you must configure the compute node through the Setup utility, and you might have to install the compute node operating system (see "Using the Setup utility" on page 25).

Removing and replacing consumable and structural parts

Use this information to remove and replace consumable and structural parts.

About this task

Replacement of the consumable and structural parts that are described in this section is your responsibility. If IBM installs a consumable and structural part at your request, you will be charged for the installation.

Removing the chassis bulkhead

Use this information to remove the chassis bulkhead.

Before you begin

Before you remove the chassis bulkhead, complete the following steps:

1. Read "Safety" on page v and "Installation guidelines" on page 569.
2. If the compute node is installed in a chassis, remove it (see "Removing a compute node from a chassis" on page 571 for instructions).
3. Carefully lay the compute node on a flat, static-protective surface, orienting the compute node with the bezel pointing toward you.

Procedure

To remove the chassis bulkhead, complete the following steps.

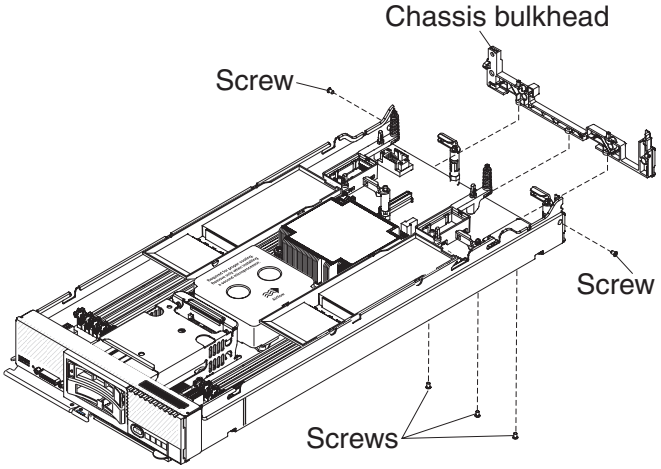

1. Remove the cover (see "Removing the compute node cover" on page 575).
2. Remove the I/O expansion adapters (see "Removing an I/O expansion adapter" on page 605).
3. Remove the fabric connector (see "Removing a fabric connector" on page 597).
4. Carefully place the chassis on its side with the front handle side up.

   Note: You might find it helpful to remove the air baffles.
5. Using a T8 Torx screwdriver, remove the screws that secure the bulkhead from the bottom of the chassis.
6. Carefully return the chassis to the bottom-side-down orientation.
7. Using a T8 Torx screwdriver, remove the screws that secure the bulkhead from the sides of the chassis.
8. Lift the chassis bulkhead from the chassis.

What to do next

If you are instructed to return the chassis bulkhead, follow all packaging instructions, and use any packaging materials for shipping that are supplied to you.

Installing the chassis bulkhead

Use this information to install the chassis bulkhead.

Before you begin

Before you install the chassis bulkhead, complete the following steps:

1. Read "Safety" on page v and "Installation guidelines" on page 569.
2. If the compute node is installed in a chassis, remove it (see "Removing a compute node from a chassis" on page 571 for instructions).
3. Carefully lay the compute node on a flat, static-protective surface, orienting the compute node with the bezel pointing toward you.

Procedure

To install the chassis bulkhead, complete the following steps.

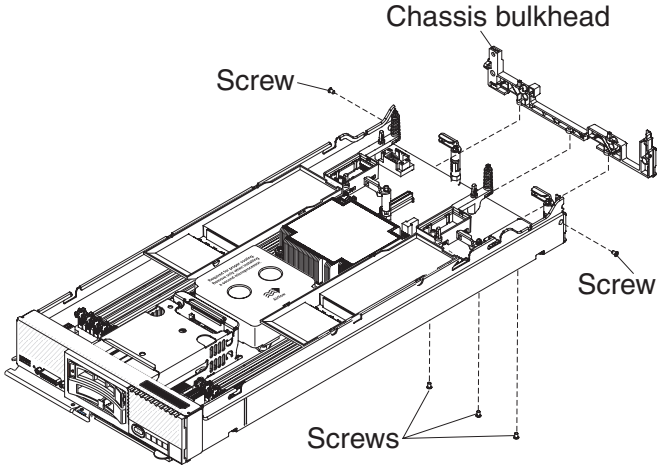

1. Remove the cover (see "Removing the compute node cover").
2. Remove the fabric connector (see "Removing a fabric connector" on page 597).
3. Position the bulkhead in the chassis.
4. Using a T8 Torx screwdriver, install the screws that secure the bulkhead to the sides of the chassis.
5. Carefully place the chassis on its side with the front handle side up.
6. Using a T8 Torx screwdriver, install the screws that secure the bulkhead to the bottom of the chassis.
7. Carefully return the chassis to the bottom-side-down orientation.
8. Install the fabric connector (see "Installing a fabric connector" on page 598).
9. Install the I/O expansion adapters (see "Installing an I/O expansion adapter" on page 606).
10. Install the air baffles, if you removed them.

What to do next

After you install the chassis bulkhead, complete the following steps:

1. Install the cover onto the compute node (see "Installing the compute node cover" on page 577 for instructions).
2. Install the compute node into the chassis (see "Installing a compute node in a chassis" on page 572 for instructions).

Removing the compute node cover

Use this information to remove the cover from a compute node.

Before you begin

Before you remove the compute node cover, complete the following steps:

1. Read "Safety" on page v and "Installation guidelines" on page 569.
2. If the compute node is installed in a chassis, remove it (see "Removing a compute node from a chassis" on page 571 for instructions).
3. Carefully lay the compute node on a flat, static-protective surface, orienting the compute node with the bezel pointing toward you.

Statement 12

CAUTION:
The following label indicates a hot surface nearby.

Statement 21

CAUTION:
Hazardous energy is present when the compute node is connected to the power source. Always replace the compute node cover before installing the compute node.

Procedure

To remove the compute node cover, complete the following steps:

1. Press on the release button and the push point at the same time and slide the cover toward the rear of the compute node.
2. Lift the cover away from the compute node.

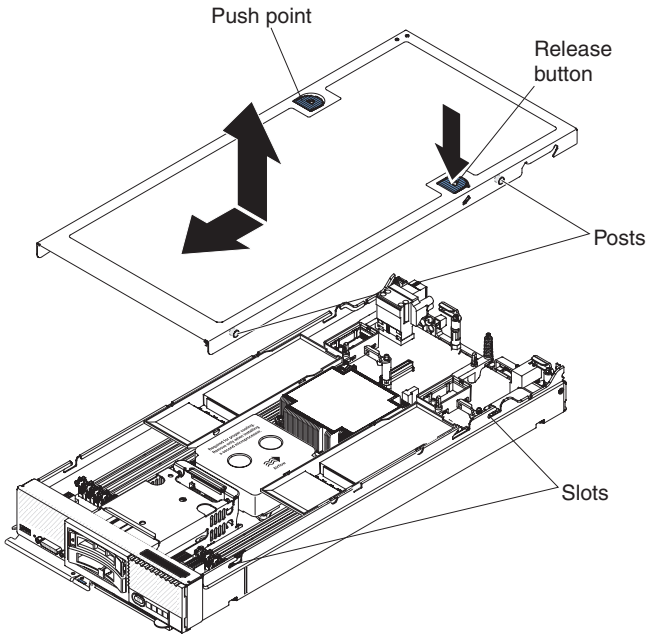

3. Lay the cover flat or store it for future use.

What to do next

If you are instructed to return the cover, follow all packaging instructions, and use any packaging materials for shipping that are supplied to you.

Installing the compute node cover

Use this information to install the compute node cover.

Before you begin

Before you install the compute node cover, read “Safety” on page v and “Installation guidelines” on page 569.

If you are replacing the cover, make sure that you have the system service label kit on hand for use during the replacement procedure (see Chapter 5, “Parts listing, Types 7863, 8737, 8738, and 8956,” on page 53).

Attention: You cannot insert the compute node into the IBM Flex System chassis until the cover is installed and closed. Do not attempt to override this protection.

Statement 21

CAUTION:
Hazardous energy is present when the compute node is connected to the power source. Always replace the compute node cover before installing the compute node.

Procedure

To install the compute node cover, complete the following steps:

1. Carefully lay the compute node on a flat, static-protective surface, orienting the compute node with the bezel pointing toward you.
2. Orient the cover so that the posts on the inside of the cover slide into the slots on the compute node.

   Note: Before you close the cover, make sure that the air baffles and all components are installed and seated correctly and that you have not left loose tools or parts inside the compute node.

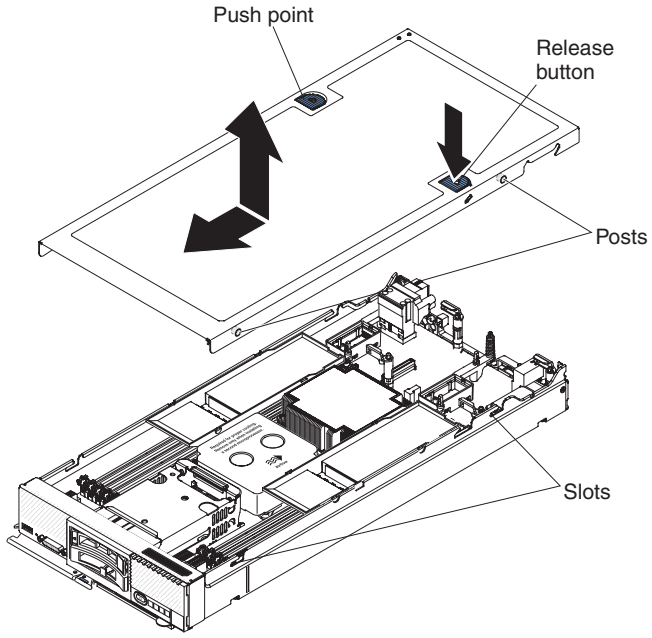

3. Hold the front of the compute node and slide the cover forward to the closed position, until it clicks into place.
4. To install a system service label, align the label on the cover, remove the backing, and press the label on the cover.

What to do next

After you install the compute node cover, install the compute node into the chassis (see "Installing a compute node in a chassis" on page 572 for instructions).

Removing the front handle

Use this information to remove the front handle.

Before you begin

Before you remove the front handle, complete the following steps:

1. Read "Safety" on page v and "Installation guidelines" on page 569.
2. If the compute node is installed in a chassis, remove it (see "Removing a compute node from a chassis" on page 571 for instructions).
3. Carefully lay the compute node on a flat, static-protective surface with the cover side down, orienting the compute node with the bezel pointing toward you.

Procedure

To remove the front handle, complete the following steps.

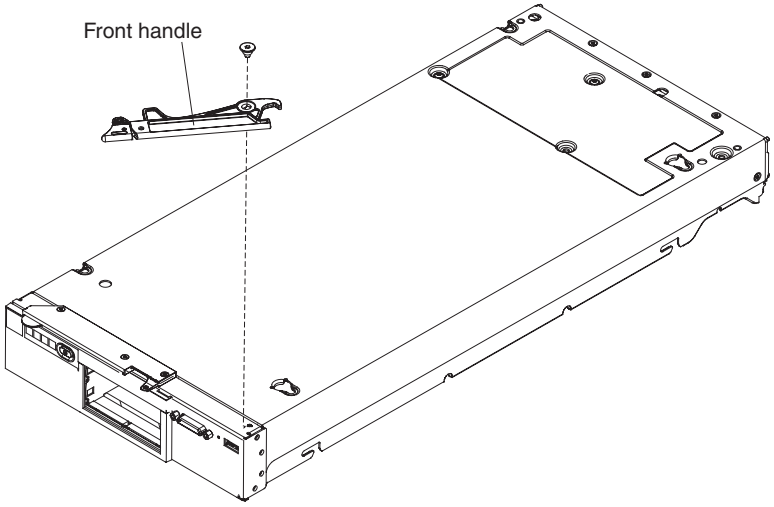

1. Locate the screw that attaches the handle to the compute node.
2. Using a T15 Torx screwdriver, remove the screw from the front handle and save the screw in a safe place. Use the same screw when you install a front handle.

What to do next

If you are instructed to return the front handle, follow all packaging instructions, and use any packaging materials for shipping that are supplied to you.

Installing the front handle

Use this information to install the front handle.

Before you begin

Before you install the front handle, complete the following steps:

1. Read “Safety” on page v and “Installation guidelines” on page 569.
2. If the compute node is installed in a chassis, remove it (see “Removing a compute node from a chassis” on page 571 for instructions).
3. Carefully lay the compute node on a flat, static-protective surface with the cover side down, orienting the compute node with the bezel pointing toward you.

Procedure

To install the front handle, complete the following steps.

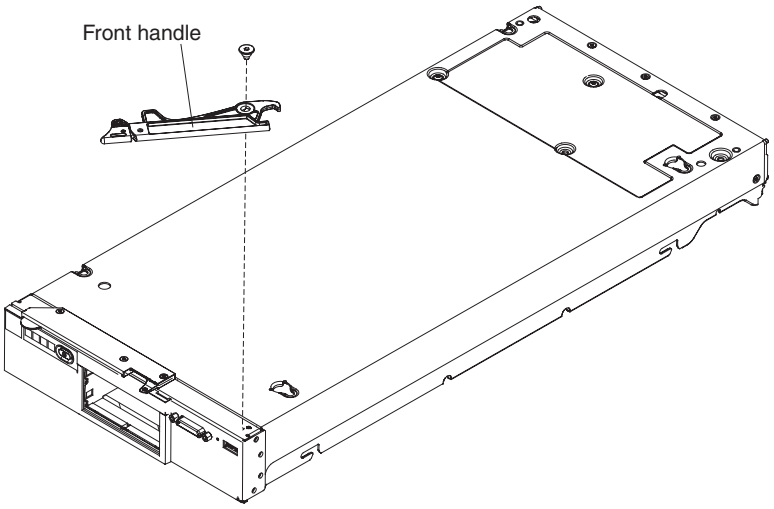

1. Orient the front handle so that the blue release latch is toward the middle of the compute node.
2. Align the hole in the handle with the hole on the compute node where the handle is installed.
3. Using a T15 Torx screwdriver, install the screw that secures the handle. Install the screw that you removed when you removed the handle.

What to do next

After you install the front handle, install the compute node into the chassis (see "Installing a compute node in a chassis" on page 572 for instructions).

Removing the hard disk drive cage

Use this information to remove the hard disk drive cage.

Before you begin

Before you remove the hard disk drive cage, complete the following steps:

1. Read "Safety" on page v and "Installation guidelines" on page 569.
2. If the compute node is installed in a chassis, remove it (see "Removing a compute node from a chassis" on page 571 for instructions).
3. Carefully lay the compute node on a flat, static-protective surface, orienting the compute node with the bezel pointing toward you.

Procedure

To remove the hard disk drive cage, complete the following steps.

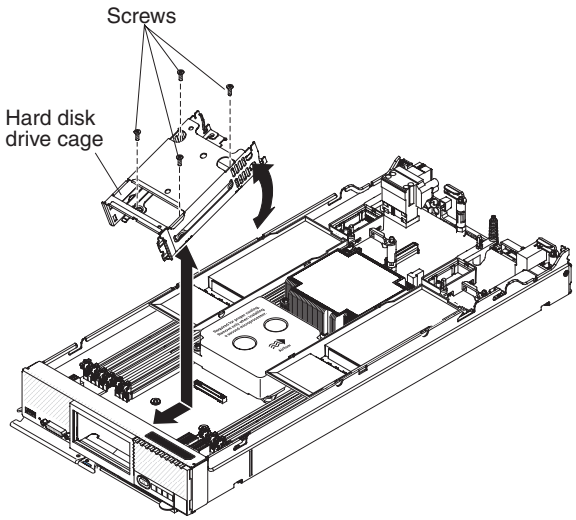

1. Remove the cover (see “Removing the compute node cover” on page 575).
2. Remove the hot-swap hard disk drives and hard disk drive bay fillers.
3. Remove the hard disk drive backplane (see “Removing the hard disk drive backplane” on page 599).
4. Using a T8 Torx screwdriver, remove the four screws from the cage and rotate the cage from under the bezel; then, remove the cage from the compute node at an angle.

What to do next

If you are instructed to return the hard disk drive cage, follow all packaging instructions, and use any packaging materials for shipping that are supplied to you.

Installing the hard disk drive cage

Use this information to install the hard disk drive cage.

Before you begin

Before you install the hard disk drive cage, complete the following steps:

1. Read “Safety” on page v and “Installation guidelines” on page 569.
2. If the compute node is installed in a chassis, remove it (see “Removing a compute node from a chassis” on page 571 for instructions).
3. Carefully lay the compute node on a flat, static-protective surface, orienting the compute node with the bezel pointing toward you.

Procedure

To install the hard disk drive cage, complete the following steps.

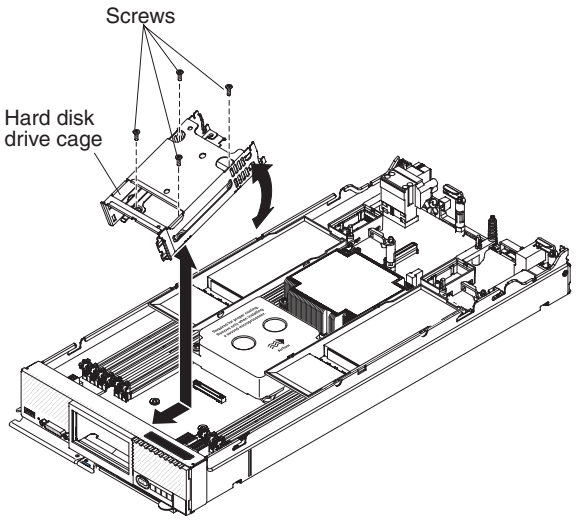

1. Remove the cover (see “Removing the compute node cover” on page 575).
2. Position the cage in the bezel at an angle and rotate the cage into position on the system board.
3. Align the cage with the screw holes on the system board.
4. Using a T8 Torx screwdriver, insert the four screws and secure the cage in the compute node.
5. Install the hard disk drive backplane (see “Installing the hard disk drive backplane” on page 600).
6. Insert the hot-swap hard disk drives and hard disk drive bay fillers.

What to do next

After you install the hard disk drive cage, complete the following steps:

1. Install the cover onto the compute node (see “Installing the compute node cover” on page 577 for instructions).
2. Install the compute node into the chassis (see “Installing a compute node in a chassis” on page 572 for instructions).

Removing and replacing Tier 1 customer replaceable units (CRUs)

Use this information for removing and replacing Tier 1 CRUs.

About this task

Replacement of Tier 1 CRUs is your responsibility. If IBM installs a Tier 1 CRU at your request, you will be charged for the installation.

Removing the adapter-retention assembly

Use this information to remove the adapter-retention assembly.

Before you begin

Before you remove the adapter-retention assembly, complete the following steps:

1. Read "Safety" on page v and "Installation guidelines" on page 569.
2. If the compute node is installed in a chassis, remove it (see "Removing a compute node from a chassis" on page 571 for instructions).
3. Carefully lay the compute node on a flat, static-protective surface, orienting the compute node with the bezel pointing toward you.

About this task

The adapter-retention assembly consists of five separate parts. You can replace only the parts that you choose and save the unused parts for future use.

Procedure

To remove the adapter-retention assembly, complete the following steps.

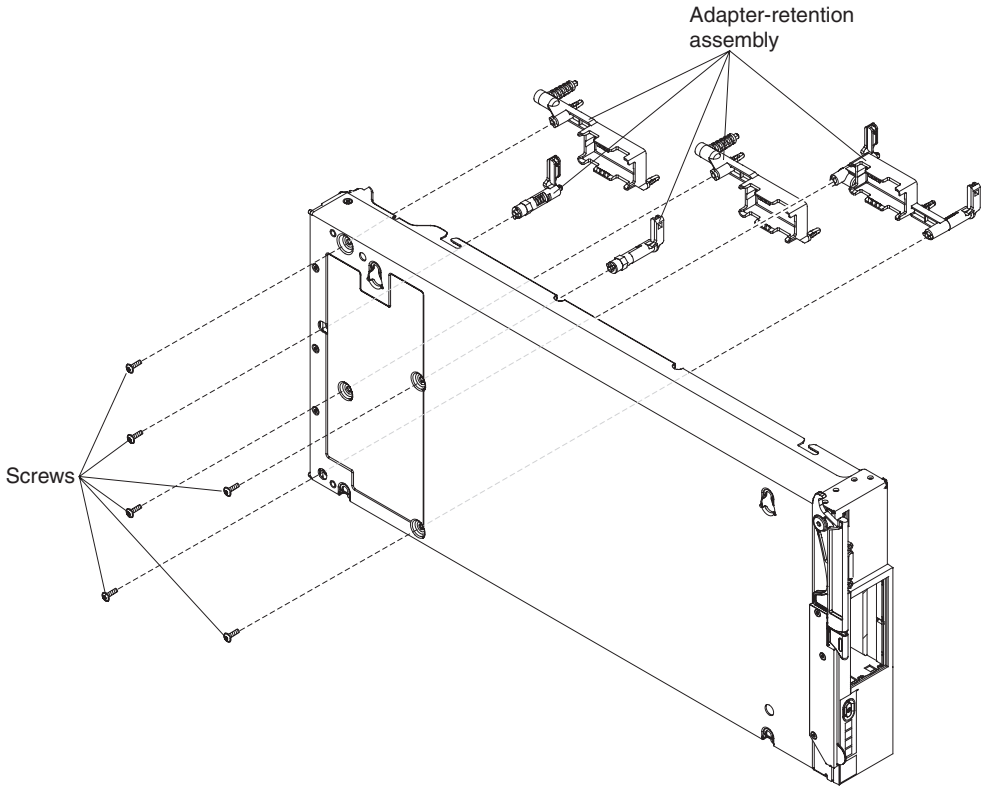

1. Remove the cover (see "Removing the compute node cover" on page 575).
2. Remove the air baffles.
3. If necessary, remove the I/O expansion adapters (see "Removing an I/O expansion adapter" on page 605).
4. Carefully place the chassis on its side with the front handle side up.
5. Using a T10 Torx screwdriver, remove the six screws that secure the adapter-retention assembly.
6. Lift the adapter-retention assembly from the system board.
7. Carefully return the chassis to the bottom-side-down orientation.

What to do next

If you are instructed to return the adapter-retention assembly, follow all packaging instructions, and use any packaging materials for shipping that are supplied to you.

Installing the adapter-retention assembly

Use this information to install the adapter-retention assembly.

Before you begin

Before you install the adapter-retention assembly, complete the following steps:

1. Read "Safety" on page v and "Installation guidelines" on page 569.
2. If the compute node is installed in a chassis, remove it (see "Removing a compute node from a chassis" on page 571 for instructions).
3. Carefully lay the compute node on a flat, static-protective surface, orienting the compute node with the bezel pointing toward you.

About this task

The adapter-retention assembly consists of five separate parts. You can replace only the parts that you choose and save the unused parts for future use.

Procedure

To install the adapter-retention assembly, complete the following steps.

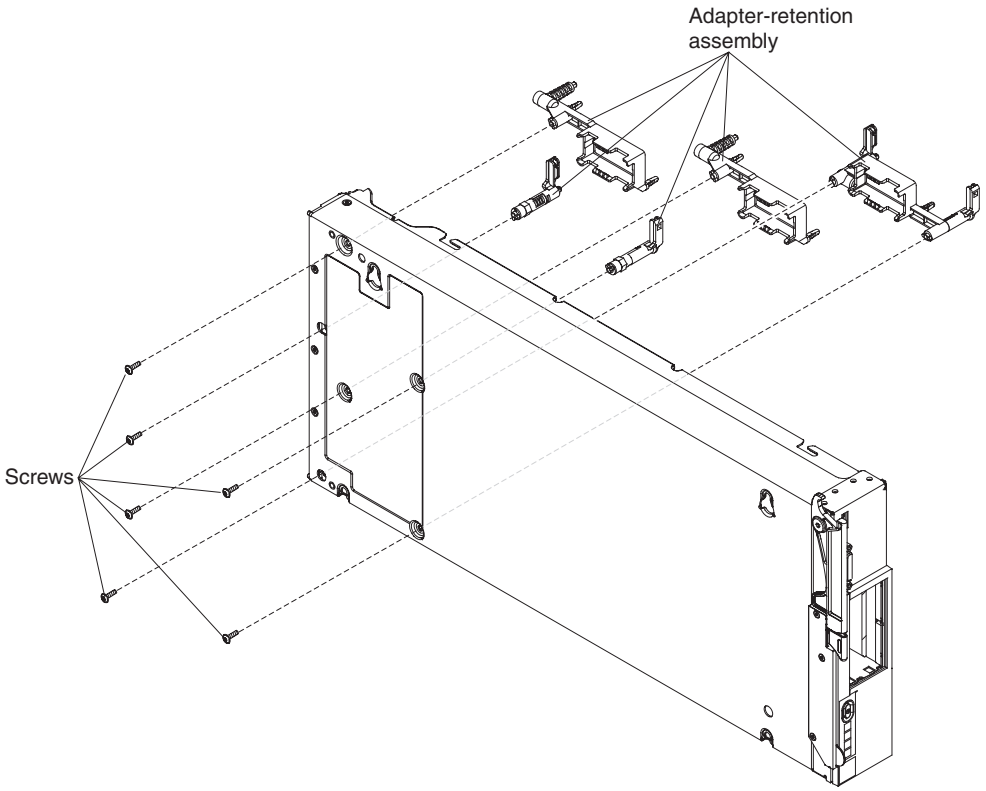

1. Remove the cover (see "Removing the compute node cover" on page 575).
2. Remove the air baffles.

3. Carefully place the chassis on its side with the front handle side up.
4. Align the adapter-retention assembly on the system board.
5. Using a T10 Torx screwdriver, install the screws that secure the adapter-retention assembly.
6. Carefully return the chassis to the bottom-side-down orientation.
7. Install the I/O expansion adapters, if you removed them (see "Installing an I/O expansion adapter" on page 606).
8. Install the air baffles.

What to do next

After you install the adapter-retention assembly, complete the following steps:

1. Install the cover onto the compute node (see "Installing the compute node cover" on page 577 for instructions).
2. Install the compute node into the chassis (see "Installing a compute node in a chassis" on page 572 for instructions).

Removing the bezel

Use this information to remove the bezel.

Before you begin

Before you remove the bezel, read "Safety" on page v and "Installation guidelines" on page 569.

About this task

If the compute node came with a RFID tag attached to the bezel, you must obtain and install a replacement RFID tag.

- To obtain a RFID tag, see Chapter 5, "Parts listing, Types 7863, 8737, 8738, and 8956," on page 53
- For installation instructions, see "Installing the RFID tag" on page 610

Procedure

To remove the bezel, complete the following steps.

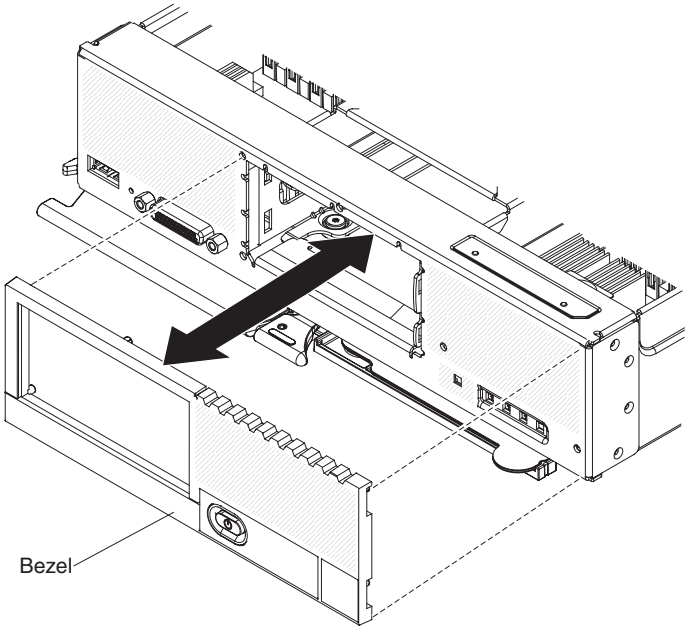

1. Use a flat-blade screwdriver to carefully pull the bezel from the compute node.
2. Lift the bezel from the compute node.

What to do next

If you are instructed to return the bezel, follow all packaging instructions, and use any packaging materials for shipping that are supplied to you.

Installing the bezel

Use this information to install the bezel.

Before you begin

Before you install the bezel, read "Safety" on page v and "Installation guidelines" on page 569.

About this task

If the compute node came with a RFID tag attached to the bezel, you must obtain and install a replacement RFID tag.

- To obtain a RFID tag, see Chapter 5, "Parts listing, Types 7863, 8737, 8738, and 8956," on page 53
- For installation instructions, see "Installing the RFID tag" on page 610

Procedure

To install the bezel, complete the following steps.

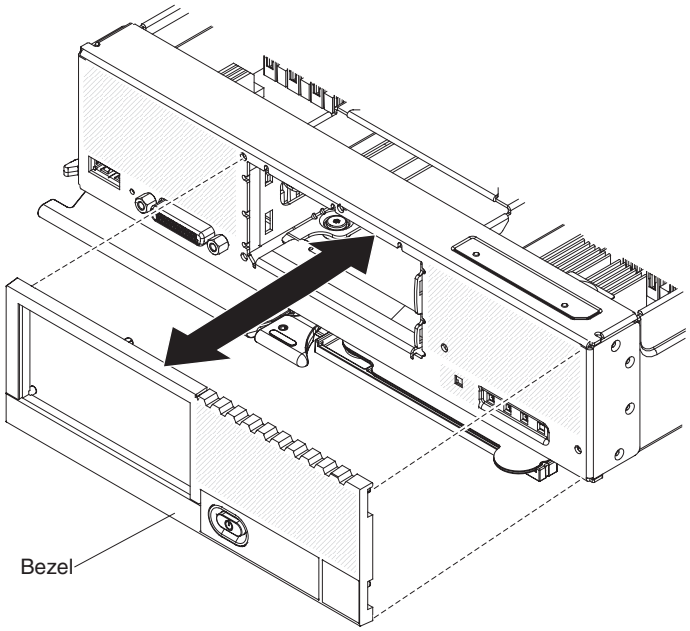

1. Position the bezel on the front of the compute node.
2. Press the bezel securely against the chassis.

   Note: Make sure that the bezel is pressed flat against the chassis around the power button, to maintain access to the power button.

Removing the CMOS battery

Use this information to remove the CMOS battery.

Before you begin

Before you remove the CMOS battery, complete the following steps:

1. Read “Safety” on page v and “Installation guidelines” on page 569.
2. If the compute node is installed in a chassis, remove it (see “Removing a compute node from a chassis” on page 571 for instructions).
3. Carefully lay the compute node on a flat, static-protective surface, orienting the compute node with the bezel pointing toward you.

Procedure

To remove the CMOS battery, complete the following steps:

1. Remove the cover (see “Removing the compute node cover” on page 575).
2. Locate the CMOS battery on the system board (see “System-board connectors” on page 16).
3. If a cover is over the CMOS battery, remove the cover.
4. Pivot the CMOS battery toward the middle of the compute node.

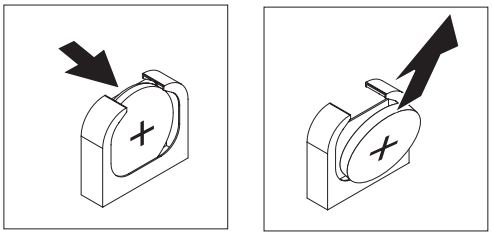

5. Lift the CMOS battery from the socket.

What to do next

After you remove the CMOS battery, dispose of the CMOS battery as required by local ordinances or regulations.

Installing the CMOS battery

Use this information to install a CMOS battery.

Before you begin

Before you install the CMOS battery, complete the following steps:

1. Read "Safety" on page v and "Installation guidelines" on page 569.
2. If the compute node is installed in a chassis, remove it (see "Removing a compute node from a chassis" on page 571 for instructions).
3. Carefully lay the compute node on a flat, static-protective surface, orienting the compute node with the bezel pointing toward you.

About this task

The following notes describe information that you must consider when you are replacing the CMOS battery in the compute node:

- You must replace the CMOS battery with a lithium CMOS battery of the same type.
- To order replacement batteries, call 1-800-426-7378 within the United States, and 1-800-465-7999 or 1-800-465-6666 within Canada. Outside the U.S. and Canada, call your IBM marketing representative or authorized reseller.
- After you replace the CMOS battery, you must reconfigure the compute node and reset the system date and time.
- To avoid possible danger, read and follow the following safety statement.

Statement 2

CAUTION:
When replacing the lithium battery, use only IBM Part Number 33F8354 or an equivalent type battery recommended by the manufacturer. If your system has a module containing a lithium battery, replace it only with the same module type made by the same manufacturer. The battery contains lithium and can explode if not properly used, handled, or disposed of.

Do not:

- **Throw or immerse into water**
- **Heat to more than 100° C (212° F)**
- **Repair or disassemble**

Dispose of the battery as required by local ordinances or regulations.

Attention: Touching the CMOS battery on a metal surface, such as the side of the compute node, when you replace the CMOS battery can cause it to fail.

Procedure

To install a CMOS battery, complete the following steps:

1. Remove the cover (see "Removing the compute node cover" on page 575).
2. Follow any special handling and installation instructions that come with the CMOS battery.
3. Locate the CMOS battery socket on the system board (see "System-board connectors" on page 16).
4. Orient the CMOS battery so that the positive (+) side faces in toward the center of the compute node.

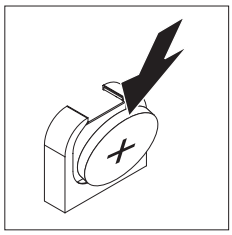

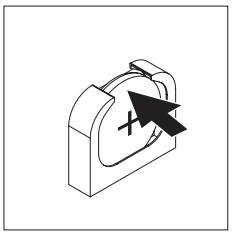

5. Pivot the CMOS battery so that you can insert it into the bottom of the socket.
6. As you slide the CMOS battery into place, press the top of the CMOS battery into the socket.
7. If you removed a cover from the battery, replace the cover.

What to do next

After you install the CMOS battery, complete the following steps:

1. Install the cover onto the compute node (see "Installing the compute node cover" on page 577 for instructions).
2. Install the compute node into the chassis (see "Installing a compute node in a chassis" on page 572 for instructions).
3. Turn on the compute node, start the Setup utility, and reset the configuration (see "Using the Setup utility" on page 25 for instructions).

Removing a DIMM

Use this information to remove a dual inline memory module (DIMM).

Before you begin

Before you remove a DIMM, complete the following steps:

1. Read "Safety" on page v and "Installation guidelines" on page 569.
2. If the compute node is installed in a chassis, remove it (see "Removing a compute node from a chassis" on page 571 for instructions).
3. Carefully lay the compute node on a flat, static-protective surface, orienting the compute node with the bezel pointing toward you.

About this task

After you install or remove a DIMM, you must change and save the new configuration information by using the Setup utility. When you turn on the compute node, a message indicates that the memory configuration has changed. Start the Setup utility and select **Save Settings** (see "Using the Setup utility" on page 25 for more information) to save changes.

Procedure

To remove a DIMM, complete the following steps.

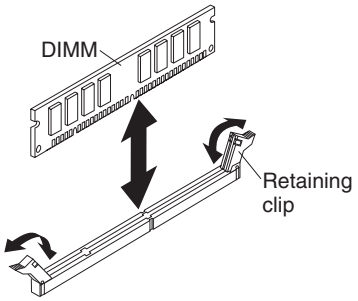

1. Remove the cover (see "Removing the compute node cover" on page 575).
2. Remove the air baffle installed over the DIMM connector.

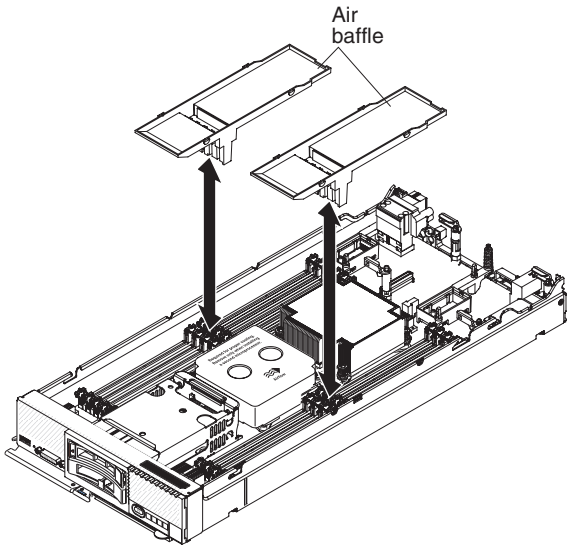

3. Locate the DIMM connectors (see "System-board connectors" on page 16). Determine which DIMM you want to remove from the compute node.

   Attention: To avoid breaking the retaining clips or damaging the DIMM connectors, handle the clips gently.

4. Make sure that both retaining clips on the DIMM connector from which you are removing the DIMM are in the open position.
5. Pull the DIMM out of the connector.
6. If you are not immediately replacing the DIMM, install the air baffle.

   Attention: To maintain proper system cooling, do not operate the compute node without air baffles installed over the DIMM connectors.

What to do next

If you are instructed to return the DIMM, follow all packaging instructions, and use any packaging materials for shipping that are supplied to you.

Installing a DIMM

Use this information to install a DIMM.

Before you begin

Before you install a DIMM, complete the following steps:

1. Read "Safety" on page v and "Installation guidelines" on page 569.
2. Read the documentation that comes with the DIMMs.
3. If the compute node is installed in a chassis, remove it (see "Removing a compute node from a chassis" on page 571 for instructions).
4. Carefully lay the compute node on a flat, static-protective surface, orienting the compute node with the bezel pointing toward you.

About this task

This component can be installed as an optional device or as a CRU. The installation procedure is the same for the optional device and the CRU.

After you install or remove a DIMM, you must change and save the new configuration information by using the Setup utility. When you turn on the compute node, a message indicates that the memory configuration has changed. Start the Setup utility and select **Save Settings** (see "Using the Setup utility" on page 25 for more information) to save changes.

If you are installing a DIMM as a result of a DIMM failure, you might have to reenable the DIMM. To re-enable the DIMM, complete the following steps:

1. Verify that the amount of installed memory is the expected amount of memory through the operating system, by watching the monitor as the compute node starts, by using the CMM `sol` command, or through IBM Flex System Manager management software (if installed).
   - For more information about the CMM `sol` command, see the IBM Flex System Chassis Management Module: Command-Line Interface Reference Guide at http://pic.dhe.ibm.com/infocenter/flexsys/information/topic/com.ibm.acc.cmm.doc/cli_command_sol.html.
   - For more information about IBM Flex System Manager management software, see the IBM Flex System Manager Software: Installation and Service Guide at http://pic.dhe.ibm.com/infocenter/flexsys/information/topic/com.ibm.acc.8731.doc/product_page.html.
2. Run the Setup utility to reenable the DIMMs (see "Using the Setup utility" on page 25 for more information).

The compute node has a total of 24 dual inline memory module (DIMM) connectors. The compute node supports low-profile (LP) DDR3 DIMMs with error-correcting code (ECC) in 2 GB, 4 GB, 8 GB, 16 GB, and 32 GB capacities.

The following illustration shows the system-board components, including the DIMM connectors.

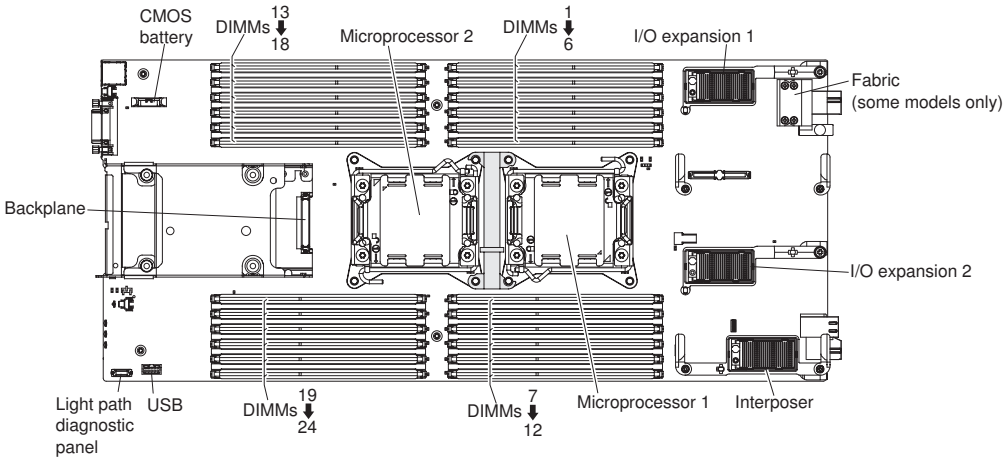

The memory is accessed internally through four channels. Each memory channel has three DIMM connectors for each microprocessor (six total). Each channel can have a maximum of eight ranks. The following table lists the memory channels and shows which DIMM connectors are in the channel for each microprocessor.

Table 13. Memory-channel configuration

Microprocessor	Memory channel	DIMM connectors
Microprocessor 1	Channel A	4, 5, and 6
	Channel B	1, 2, and 3
	Channel C	7, 8, and 9
	Channel D	10, 11, and 12
Microprocessor 2	Channel A	22, 23, and 24
	Channel B	19, 20, and 21
	Channel C	13, 14, and 15
	Channel D	16, 17, and 18

Depending on the memory mode that is set in the Setup utility, the compute node can support a minimum of 2 GB and a maximum of 384 GB of system memory in a compute node with one microprocessor. If two microprocessors are installed, the compute node can support a minimum of 4 GB and a maximum of 768 GB of system memory.

The following notes describe information that you must consider when you install memory:

- Maximum DIMM capacity:
  - Registered DIMMs (RDIMMs): 384 GB (using 16 GB RDIMMs)
  - Unbuffered DIMMs (UDIMMs): 128 GB (using 8 GB UDIMMs)
  - Load Reduced DIMMs (LRDIMMs): 768 GB (using 32 GB LRDIMMs)

- RDIMM sizes supported (GB): 2, 4, 8, 16, 32
- UDIMM sizes supported (GB): 2, 4, 8
- LRDIMM sizes supported (GB): 16, 32
- You cannot mix UDIMMs, RDIMMs and LRDIMMs in the same compute node.
- You cannot mix RDIMMs and LRDIMMs in the same compute node.
- A total of eight ranks on each channel is supported.
- If a quad-rank DIMM is installed, install it in the connector at the end of the memory channel.
- If a channel has one or more quad-rank DIMMs, only two DIMMs per channel is supported.
- If you install LRDIMMs in a 3 DIMM per channel configuration, performance might be reduced compared to standard DIMMs.

There are three memory modes:

- **Independent-channel mode:** Independent-channel mode provides a maximum of 384 GB of usable memory with one installed microprocessor, and 768 GB of usable memory with two installed microprocessors (using 32 GB DIMMs).
- **Rank-sparing mode:** In rank-sparing mode, one memory DIMM rank serves as a spare of the other ranks on the same channel. The spare rank is held in reserve and is not used as active memory. The spare rank must have identical or larger memory capacity than all the other active DIMM ranks on the same channel. After an error threshold is surpassed, the contents of that rank is copied to the spare rank. The failed rank of DIMMs is taken offline, and the spare rank is put online and used as active memory in place of the failed rank.

  The following notes describe additional information that you must consider when you select rank-sparing memory mode:

  – Rank-sparing on one channel is independent of the sparing on all other channels.
  – You can use the Setup utility to determine the status of the DIMM ranks.
- **Mirrored-channel mode:** In mirrored-channel mode, memory is installed in pairs. Each DIMM in a pair must be identical in size and architecture. The channels are grouped in pairs with each channel receiving the same data. One channel is used as a backup of the other, which provides redundancy. The memory contents on channel B are duplicated in channel C, and the memory contents of channel A are duplicated in channel D. The effective memory that is available to the system is only half of what is installed.

One DIMM for each microprocessor is the minimum requirement. However, for optimal performance, install DIMMs in sets of four so that you distribute memory equally across all four channels. If two microprocessors are installed, distribute memory across all channels and equally between the microprocessors.

Install DIMMs in order as indicated in the following table for independent-channel mode.

Table 14. DIMM population sequence for independent-channel mode

Number of installed DIMMs	1 microprocessor installed		2 microprocessors installed	
	DIMM slot number	DIMMs per channel	DIMM slot number	DIMMs per channel
1	4	1	4	1
2	1		24	
3	9		1	
4	12		21	
5	5	2	9	
6	2		13	
7	8		12	
8	11		16	
9	6	3	5	2
10	3		23	
11	7		2	
12	10		20	
13	Not used - maximum of 12 DIMMs in systems with 1 microprocessor		8	
14			14	
15			11	
16			17	
17			6	3
18			22	
19			3	
20			19	
21			7	
22			15	
23			10	
24			18	

Install DIMMs in order as indicated in the following table for rank-sparing mode.

Table 15. DIMM population sequence for rank-sparing mode

DIMM pair installation order	2 DIMMs per channel		3 DIMMs per channel	
	1 microprocessor installed	2 microprocessors installed	1 microprocessor installed	2 microprocessors installed
1	4 and 5	4 and 5	4, 5, and 6	4, 5, and 6
2	8 and 9	20 and 21	7, 8, and 9	19, 20, and 21
3	1 and 2	8 and 9	1, 2, and 3	7, 8, and 9
4	11 and 12	16 and 17	10, 11, and 12	16, 17 and 18

Table 15. DIMM population sequence for rank-sparing mode (continued)

DIMM pair installation order	2 DIMMs per channel		3 DIMMs per channel	
	1 microprocessor installed	2 microprocessors installed	1 microprocessor installed	2 microprocessors installed
5	n/a	1 and 2	n/a	1, 2, and 3
6		23 and 24		22, 23, and 24
7		11 and 12		10, 11, and 12
8		13 and 14		13, 14, and 15

Install DIMMs in order as indicated in the following table for mirrored-channel mode.

Table 16. DIMM population sequence for mirrored-channel mode

DIMM pair	1 microprocessor installed		2 microprocessors installed	
	DIMM slot numbers	DIMMs per channel	DIMM slot numbers	DIMMs per channel
1	4 and 1[1]	1	4 and 1[1]	1
2	9 and 12[1]		21 and 24[1]	
3	2 and 5[1]	2	9 and 12[1]	
4	8 and 11		13 and 16[1]	
5	3 and 6[1]	3	2 and 5[1]	2
6	7 and 10[1]		20 and 23[1]	
7	none		8 and 11[1]	
8	none		14 and 17[1]	
9	none		3 and 6[1]	3
10	none		19 and 22[1]	
11	none		7 and 10[1]	
12	none		15 and 18[1]	
1. For mirrored-channel mode, the DIMM pair must be identical in size, type, and rank count.				

Procedure

To install a DIMM, complete the following steps:

1. Remove the cover (see "Removing the compute node cover" on page 575).
2. Read the documentation that comes with the DIMM.
3. Remove the air baffle installed over the DIMM connector.

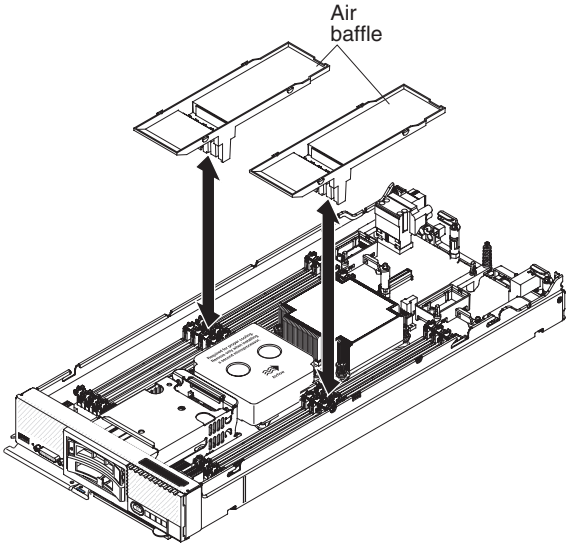

4. Locate the DIMM connectors (see “System-board connectors” on page 16). Determine in which DIMM connector you want to install the DIMM.
5. Touch the static-protective package that contains the DIMM to any *unpainted* metal surface on the IBM Flex System chassis or any *unpainted* metal surface on any other grounded rack component in the rack in which you are installing the DIMM for at least 2 seconds; then, remove the DIMM from its package.

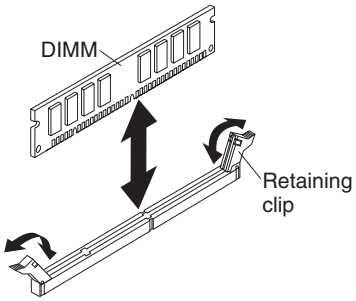

6. Make sure that both retaining clips on the DIMM connector are in the open position.
7. Turn the DIMM so that the DIMM keys align correctly with the DIMM connector on the system board.

   Attention: To avoid breaking the retaining clips or damaging the DIMM connector, handle the clips gently.
8. Press the DIMM into the DIMM connector. The retaining clips lock the DIMM into the connector.
9. Make sure that the small tabs on the retaining clips engage the notches on the DIMM. If there is a gap between the DIMM and the retaining clips, the DIMM has not been correctly installed. Press the DIMM firmly into the connector, and then press the retaining clips toward the DIMM until the tabs are fully seated. When the DIMM is correctly installed, the retaining clips are parallel to the sides of the DIMM.

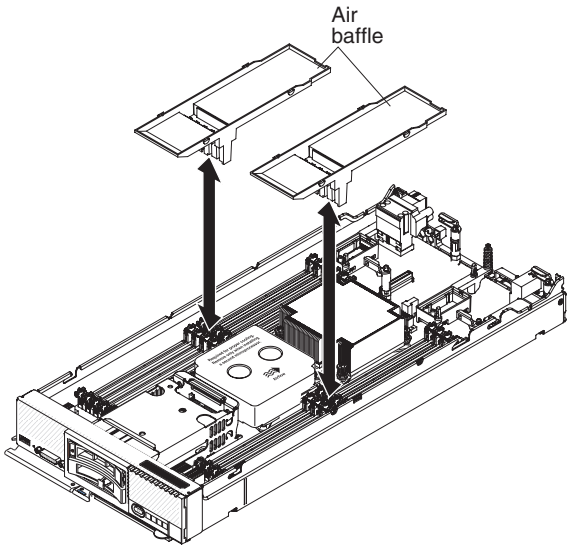

10. Install the air baffle over the DIMM connector.

    Attention: To maintain proper system cooling, do not operate the compute node without air baffles installed over the DIMM connectors.

What to do next

After you install the DIMM, complete the following steps:

1. Install the cover onto the compute node (see "Installing the compute node cover" on page 577 for instructions).
2. Install the compute node into the chassis (see "Installing a compute node in a chassis" on page 572 for instructions).

Removing a fabric connector

Use this information to remove a fabric connector.

Before you begin

Before you remove the fabric connector, complete the following steps:

1. Read "Safety" on page v and "Installation guidelines" on page 569.
2. If the compute node is installed in a chassis, remove it (see "Removing a compute node from a chassis" on page 571 for instructions).
3. Carefully lay the compute node on a flat, static-protective surface, orienting the compute node with the bezel pointing toward you.
4. Obtain a #1 Phillips screwdriver.

About this task

When you remove the fabric connector, the UEFI firmware holds the Ethernet controller in reset and displays a warning message, if an I/O expansion adapter is not installed in the I/O expansion connector 1 to provide connectivity to the chassis.

Procedure

To remove a fabric connector, complete the following steps.

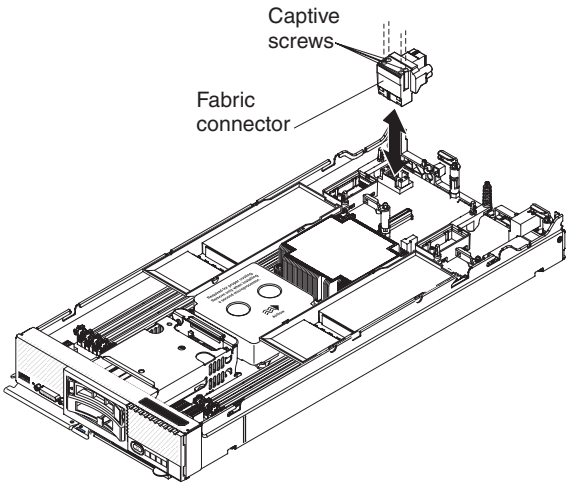

1. Remove the cover (see "Removing the compute node cover" on page 575).
2. Locate the fabric connector on the system board (see "System-board layouts" on page 16).
3. Using a #1 Phillips screwdriver, loosen the four captive screws that secure the fabric connector.
4. Lift the fabric connector from the system board and store it in a safe place.

What to do next

If you are instructed to return the fabric connector, follow all packaging instructions, and use any packaging materials for shipping that are supplied to you.

If you have removed the fabric connector to install an I/O expansion adapter in I/O expansion connector 1, keep the fabric connector in a safe place for future use.

Installing a fabric connector

Use this information to install a fabric connector.

Before you begin

Before you install a fabric connector, complete the following steps:

1. Read "Safety" on page v and "Installation guidelines" on page 569.
2. If the compute node is installed in a chassis, remove it (see "Removing a compute node from a chassis" on page 571 for instructions).
3. Carefully lay the compute node on a flat, static-protective surface, orienting the compute node with the bezel pointing toward you.
4. Obtain a #1 Phillips screwdriver.

Procedure

To install a fabric connector, complete the following steps.

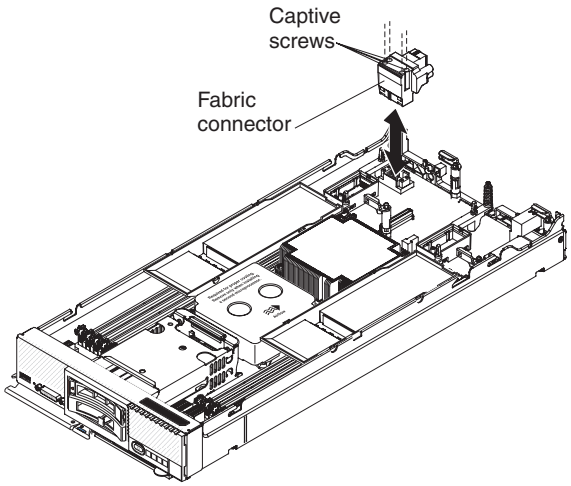

1. Remove the cover (see "Removing the compute node cover" on page 575).
2. Locate the fabric connector (see "System-board layouts" on page 16).
3. Orient the fabric connector on the system board.
4. Using a #1 Phillips screwdriver, tighten the four captive screws to secure the fabric connector.

   Attention: Make sure that the fabric connector is secure, but do not overtighten the screws to avoid damaging the connector.

What to do next

After you install the fabric connector, complete the following steps:

1. Install the cover onto the compute node (see "Installing the compute node cover" on page 577 for instructions).
2. Install the compute node into the chassis (see "Installing a compute node in a chassis" on page 572 for instructions).

Removing the hard disk drive backplane

Use this information to remove the hard disk drive backplane.

Before you begin

Before you remove the hard disk drive backplane, complete the following steps:

1. Read "Safety" on page v and "Installation guidelines" on page 569.
2. If the compute node is installed in a chassis, remove it (see "Removing a compute node from a chassis" on page 571 for instructions).
3. Carefully lay the compute node on a flat, static-protective surface, orienting the compute node with the bezel pointing toward you.

Procedure

To remove the hard disk drive backplane, complete the following steps.

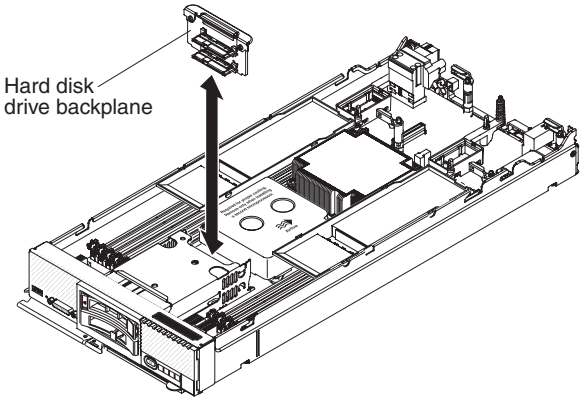

1. Remove the cover (see "Removing the compute node cover" on page 575).
2. Pull the hard disk drives out slightly from the bays to disengage them from the backplane and remove any hard disk drive bay fillers.
3. Lift out the hard disk drive backplane.

What to do next

If you are instructed to return the hard disk drive backplane, follow all packaging instructions, and use any packaging materials for shipping that are supplied to you.

Installing the hard disk drive backplane

Use this information to install the hard disk drive backplane.

Before you begin

Before you install the hard disk drive backplane, complete the following steps:

1. Read "Safety" on page v and "Installation guidelines" on page 569.
2. If the compute node is installed in a chassis, remove it (see "Removing a compute node from a chassis" on page 571 for instructions).
3. Carefully lay the compute node on a flat, static-protective surface, orienting the compute node with the bezel pointing toward you.

Procedure

To install the hard disk drive backplane, complete the following steps.

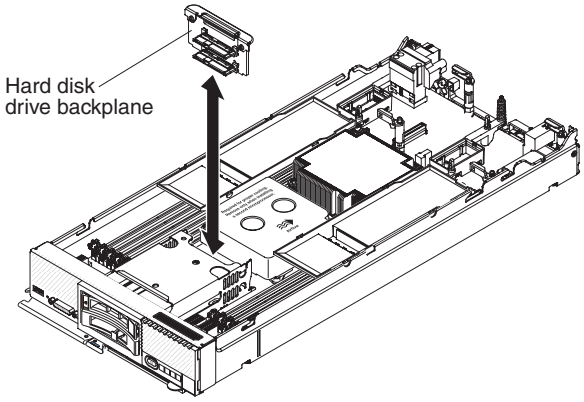

1. Remove the cover (see "Removing the compute node cover" on page 575).
2. Align the backplane with the hard disk drive cage and the connector on the system board and press the backplane into position until it is fully seated in the connector.
3. Insert the hot-swap hard disk drives and hard disk drive bay fillers.

What to do next

After you install the hard disk drive backplane, complete the following steps:

1. Install the cover onto the compute node (see "Installing the compute node cover" on page 577 for instructions).
2. Install the compute node into the chassis (see "Installing a compute node in a chassis" on page 572 for instructions).

Removing a hot-swap hard disk drive

Use this information to remove a hot-swap hard disk drive.

Before you begin

Before you remove a hot-swap hard disk drive, complete the following steps:

1. Back up all important data before you make changes to hard disk drives.
2. Read "Safety" on page v and "Installation guidelines" on page 569.

Procedure

To remove a hot-swap hard disk drive, complete the following steps.

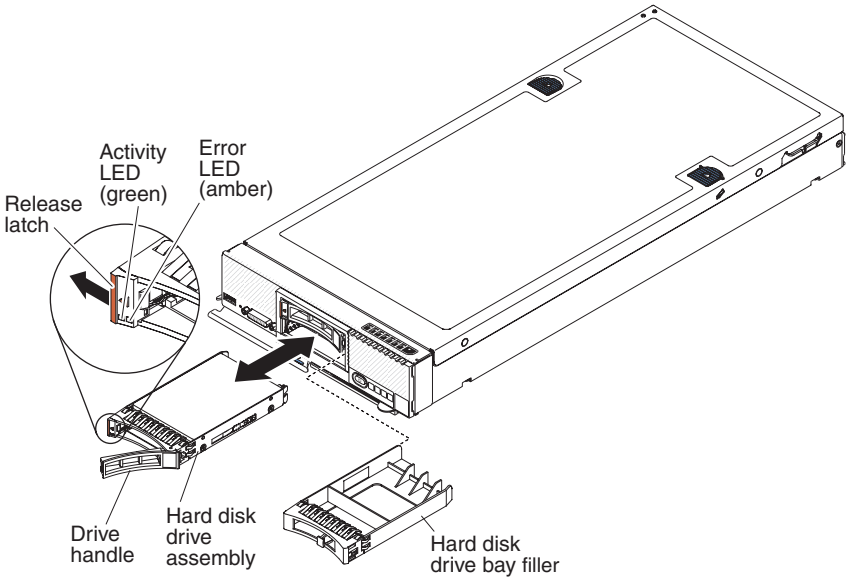

1. Press the release latch (orange) on the hard disk drive to release the drive handle.
2. Pull the release handle to remove the drive from the bay.

What to do next

If you are instructed to return the hard disk drive, follow all packaging instructions, and use any packaging materials for shipping that are supplied to you.

Installing a hot-swap hard disk drive

Use this information to install a hot-swap hard disk drive.

Before you begin

Before you install the hot-swap hard disk drive, read “Safety” on page v and “Installation guidelines” on page 569.

About this task

The compute node has two SAS or SATA hard disk drive bays for installing hot-swap hard disk drives, such as hot-swap SAS hard disk drives. One hard disk drive might already be installed in the compute node. If the compute node is equipped with one hard disk drive, you can install an additional drive. The compute node supports using RAID 0 or RAID 1 when two hard disk drives of the same interface type are installed. See “Configuring a RAID array” on page 34 for information about RAID configuration.

To install a hot-swap hard disk drive or hard disk drive bay filler, complete the following steps.

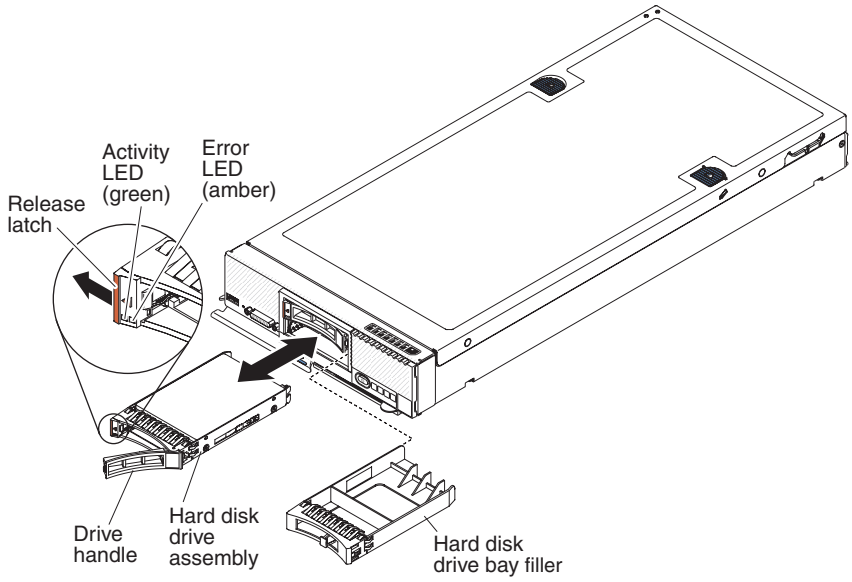

Procedure

1. Identify the hard disk drive bay in which you plan to install the hot-swap hard disk drive.
2. If a hard disk drive bay filler is installed, remove it from the compute node by pulling the release lever and sliding the filler away from the compute node.
3. Touch the static-protective package that contains the hot-swap hard disk drive to any *unpainted* metal surface on the IBM Flex System chassis or any *unpainted* metal surface on any other grounded rack component; then, remove the hard disk drive from the package.
4. Open the release lever on the hot-swap hard disk drive and slide the drive into the bay until it is firmly seated in the connector.
5. Lock the hot-swap hard disk drive into place by closing the release lever.
6. Check the hard disk drive status LEDs to make sure that the hard disk drive is operating correctly.

What to do next

See “Configuring a RAID array” on page 34 for information about SAS RAID configuration.

Removing an interposer cable

Use this information to remove an interposer cable.

Before you begin

Before you remove the interposer cable, complete the following steps:

1. Read “Safety” on page v and “Installation guidelines” on page 569.
2. If the compute node is installed in a chassis, remove it (see “Removing a compute node from a chassis” on page 571 for instructions).
3. Carefully lay the compute node on a flat, static-protective surface, orienting the compute node with the bezel pointing toward you.

Procedure

To remove an interposer cable, complete the following steps.

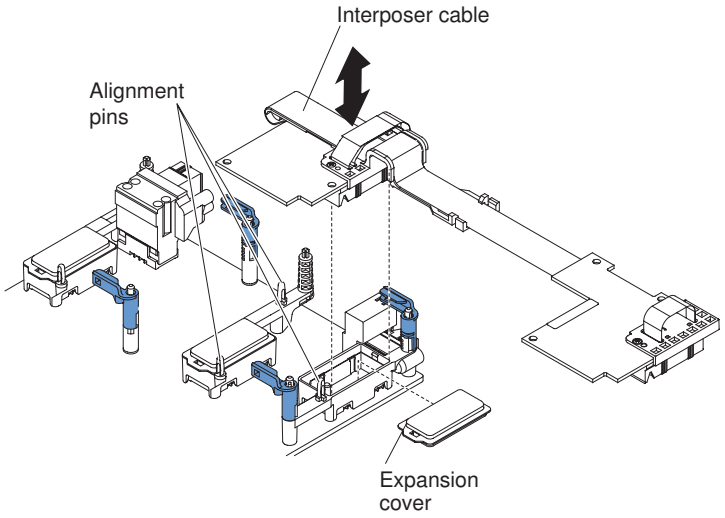

1. Remove the cover (see “Removing the compute node cover” on page 575).
2. Locate the interposer connector (see “System-board connectors” on page 16).
3. If an I/O expansion card is installed over the interposer connector, remove it (see “Removing an I/O expansion adapter” on page 605).
4. Lift the interposer cable from the connector and remove the cable from the compute node. You might find it helpful to rock the cable back and forth to disengage the cable.
5. If necessary, install the I/O expansion card (see “Installing an I/O expansion adapter” on page 606).

What to do next

If you are instructed to return the interposer cable, follow all packaging instructions, and use any packaging materials for shipping that are supplied to you.

Installing an interposer cable

Use this information to install an interposer cable.

Before you begin

Before you install an interposer cable, complete the following steps:

1. Read “Safety” on page v and “Installation guidelines” on page 569.
2. If the compute node is installed in a chassis, remove it (see “Removing a compute node from a chassis” on page 571 for instructions).
3. Carefully lay the compute node on a flat, static-protective surface, orienting the compute node with the bezel pointing toward you.

About this task

This component can be installed as an optional device or as a CRU. The installation procedure is the same for the optional device and the CRU.

Two microprocessors must be installed for the compute node to support an interposer cable.

Procedure

To install an interposer cable, complete the following steps:

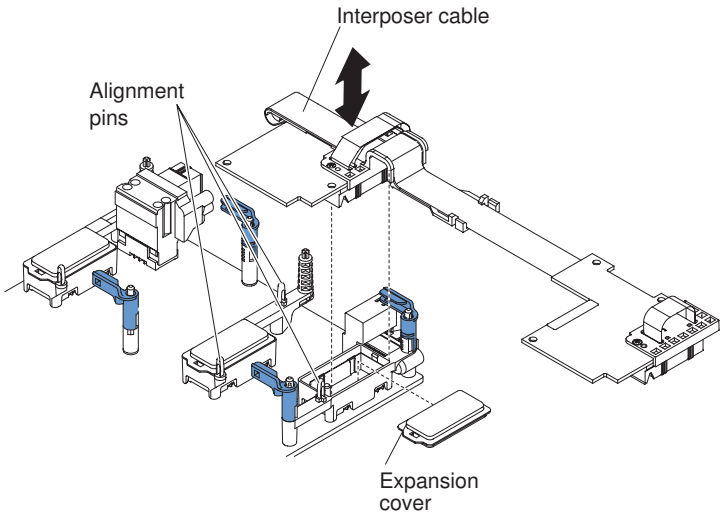

1. Remove the cover (see "Removing the compute node cover" on page 575).
2. Locate the interposer connector (see "System-board connectors" on page 16).
3. If an I/O expansion adapter is installed over the interposer connector, remove it (see "Removing an I/O expansion adapter").
4. Touch the static-protective package that contains the interposer cable to any *unpainted* metal surface on the IBM Flex System chassis or any *unpainted* metal surface on any other grounded rack component; then, remove the interposer cable from the package.
5. Remove the plastic cover from the connector, if one is present.
6. Orient the connector on the interposer cable with the connector and alignment pins on the system board; then, press the cable into the interposer connector.
7. Firmly press on the indicated locations to seat the interposer cable.
8. If necessary, install the I/O expansion adapter (see "Installing an I/O expansion adapter" on page 606).

What to do next

After you install the interposer cable, complete the following steps:

1. See the documentation that comes with the optional device that attaches to the interposer cable to complete the installation.
2. Install the cover onto the compute node (see "Installing the compute node cover" on page 577 for instructions).

Removing an I/O expansion adapter

Use this information to remove an I/O expansion adapter.

Before you begin

Before you remove the I/O expansion adapter, complete the following steps:

1. Read "Safety" on page v and "Installation guidelines" on page 569.

2. If the compute node is installed in a chassis, remove it (see "Removing a compute node from a chassis" on page 571 for instructions).
3. Carefully lay the compute node on a flat, static-protective surface, orienting the compute node with the bezel pointing toward you.

Procedure

To remove an I/O expansion adapter, complete the following steps.

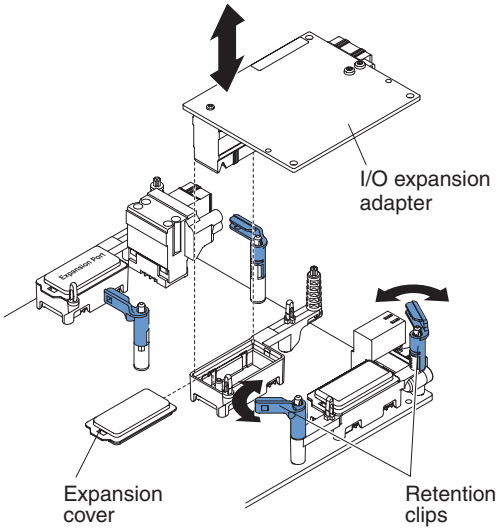

1. Remove the cover (see "Removing the compute node cover" on page 575).
2. Locate the I/O expansion adapter connectors (see "System-board layouts" on page 16).
3. Open the retention clips.
4. Lift the I/O expansion adapter from the connector and remove the I/O expansion adapter from the compute node. You might find it helpful to rock the adapter back and forth to disengage the adapter.

What to do next

If you are instructed to return the I/O expansion adapter, follow all packaging instructions, and use any packaging materials for shipping that are supplied to you.

Installing an I/O expansion adapter

Use this information to install an I/O expansion adapter.

Before you begin

Before you install an I/O expansion adapter, complete the following steps:

1. Read "Safety" on page v and "Installation guidelines" on page 569.
2. If the compute node is installed in a chassis, remove it (see "Removing a compute node from a chassis" on page 571 for instructions).
3. Carefully lay the compute node on a flat, static-protective surface, orienting the compute node with the bezel pointing toward you.

About this task

This component can be installed as an optional device or as a CRU. The installation procedure is the same for the optional device and the CRU.

The optional IBM Flex System PCIe Expansion Node supports additional PCIe adapters and I/O expansion adapters to provide a cost-effective way for you to increase and customize the capabilities of the compute node. For additional information, see PCIe Expansion Node at http://pic.dhe.ibm.com/infocenter/flexsys/information/topic/com.ibm.acc.pme.doc/product_page.html.

Procedure

To install an I/O expansion adapter, complete the following steps:

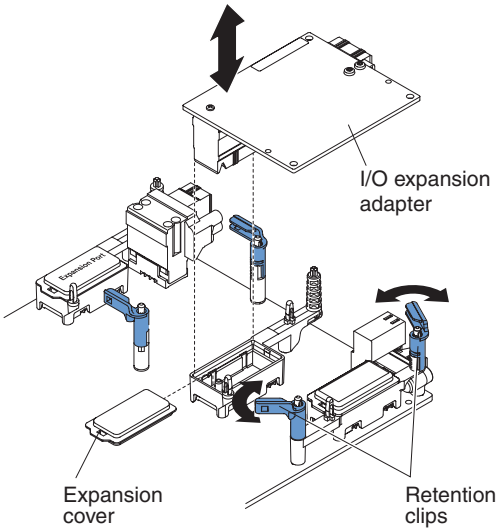

1. Remove the cover (see "Removing the compute node cover" on page 575).
2. Locate the I/O expansion connectors (see "System-board connectors" on page 16).
3. Remove the expansion cover from the connector, if one is present.
4. Touch the static-protective package that contains the expansion adapter to any *unpainted* metal surface on the IBM Flex System chassis or any *unpainted* metal surface on any other grounded rack component; then, remove the expansion adapter from the package.
5. Open the retention clips.
6. Orient the connector on the expansion adapter with the I/O expansion connector and alignment pins on the system board; then, press the adapter into the I/O expansion connector.
7. Firmly press on the indicated locations to seat the expansion adapter in the connector and over the alignment pins.
8. Close the retention clips.

What to do next

After you install the I/O expansion adapter, complete the following steps:

1. Install the cover onto the compute node (see "Installing the compute node cover" on page 577 for instructions).

2. Install the compute node into the chassis (see "Installing a compute node in a chassis" on page 572 for instructions).
3. See the documentation that comes with the expansion adapter for device-driver and configuration information to complete the installation.

Removing the light path diagnostics panel

Use this information to remove the light path diagnostics panel.

Before you begin

Before you remove the light path diagnostics panel, complete the following steps:

1. Read "Safety" on page v and "Installation guidelines" on page 569.
2. If the compute node is installed in a chassis, remove it (see "Removing a compute node from a chassis" on page 571 for instructions).
3. Carefully lay the compute node on a flat, static-protective surface, orienting the compute node with the bezel pointing toward you.

Procedure

To remove the light path diagnostics panel, complete the following steps.

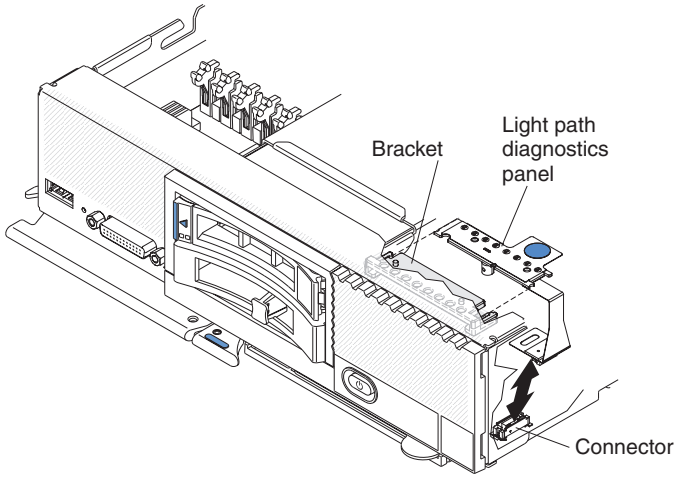

1. Remove the cover (see "Removing the compute node cover" on page 575).
2. Pull the light path diagnostics panel out of the bracket.
3. Disconnect the cable from the system board.
4. Lift the light path diagnostics panel from the compute node.

What to do next

If you are instructed to return the light path diagnostics panel, follow all packaging instructions, and use any packaging materials for shipping that are supplied to you.

Installing the light path diagnostics panel

Use this information to install the light path diagnostics panel.

Before you begin

Before you install the light path diagnostics panel, complete the following steps:

1. Read "Safety" on page v and "Installation guidelines" on page 569.
2. If the compute node is installed in a chassis, remove it (see "Removing a compute node from a chassis" on page 571 for instructions).
3. Carefully lay the compute node on a flat, static-protective surface, orienting the compute node with the bezel pointing toward you.

Procedure

To install a light path diagnostics panel, complete the following steps.

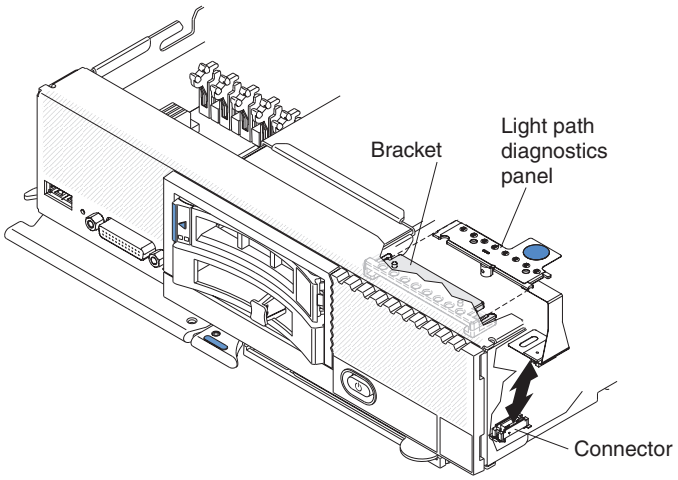

1. Remove the cover (see "Removing the compute node cover" on page 575).
2. Connect the cable on the system board.
3. Align the light path diagnostics panel with the bracket.
4. Press the light path diagnostics panel securely in the bracket.

What to do next

After you install the light path diagnostics panel, complete the following steps:

1. Install the cover onto the compute node (see "Installing the compute node cover" on page 577 for instructions).
2. Install the compute node into the chassis (see "Installing a compute node in a chassis" on page 572 for instructions).

Removing the RFID tag

Use this information to remove the RFID tag from the bezel.

Before you begin

Before you remove the RFID tag, read "Safety" on page v and "Installation guidelines" on page 569.

Procedure

To remove the RFID tag, complete the following steps.

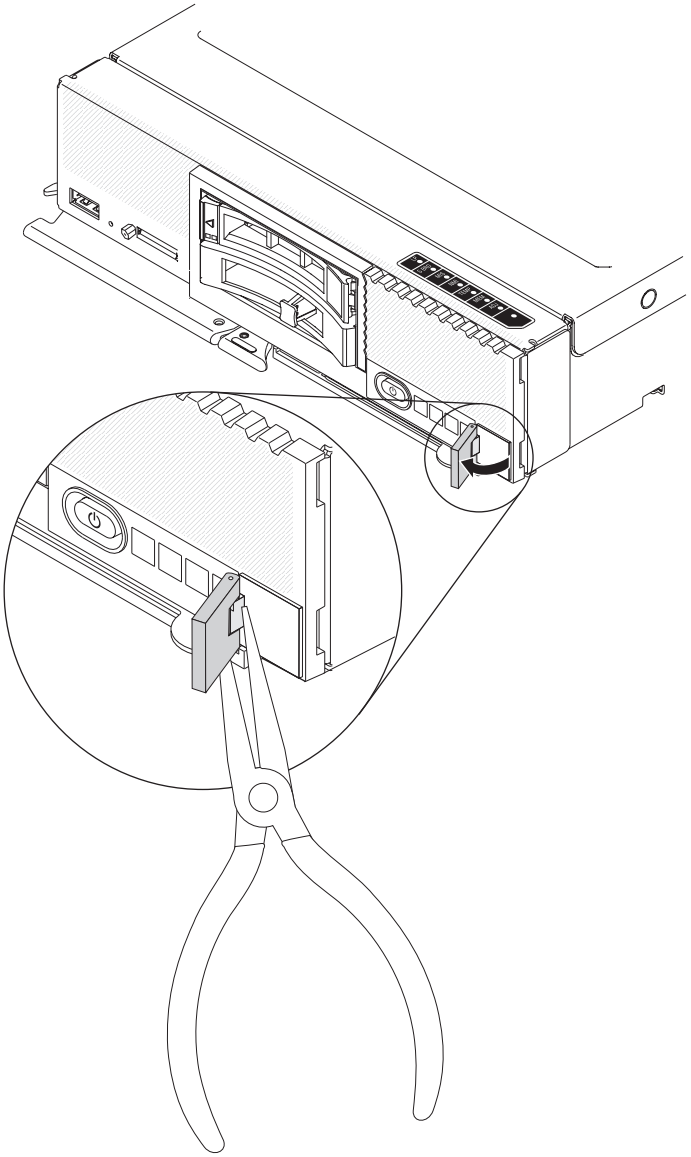

1. If the RFID tag is attached to the hinge, open the RFID tag.
2. Use pliers to carefully grip the hinge and gently pull and twist the base from the bezel.

What to do next

If you are instructed to return the RFID tag, follow all packaging instructions, and use any packaging materials for shipping that are supplied to you.

Installing the RFID tag

Use this information to install the RFID tag on the bezel.

Before you begin

Before you install the RFID tag, read “Safety” on page v and “Installation guidelines” on page 569.

Procedure

To install the RFID tag, complete the following steps.

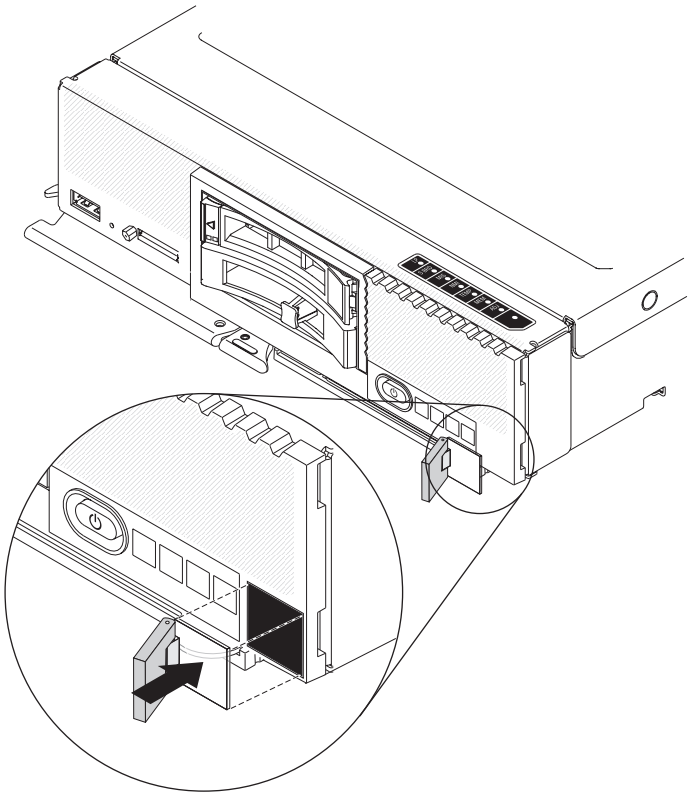

1. Make sure that the surface you are installing the tag on is thoroughly clean and dry.
2. Remove the backing from the base to expose the adhesive.
3. Position the RFID tag over the ID label on the front of the bezel.
4. Press the RFID tag securely against the bezel and hold firmly in place for 30 seconds.

   Notes:
   - Allow 30 minutes before pivoting the RFID tag.
   - Allow 24 hours to achieve near maximum adhesion.

Removing the USB enablement kit

Use this information to remove the USB enablement kit.

Before you begin

Before you remove the USB enablement kit, complete the following steps:

1. Read “Safety” on page v and “Installation guidelines” on page 569.
2. If the compute node is installed in a chassis, remove it (see “Removing a compute node from a chassis” on page 571 for instructions).

3. Carefully lay the compute node on a flat, static-protective surface, orienting the compute node with the bezel pointing toward you.

Procedure

To remove the USB enablement kit, complete the following steps.

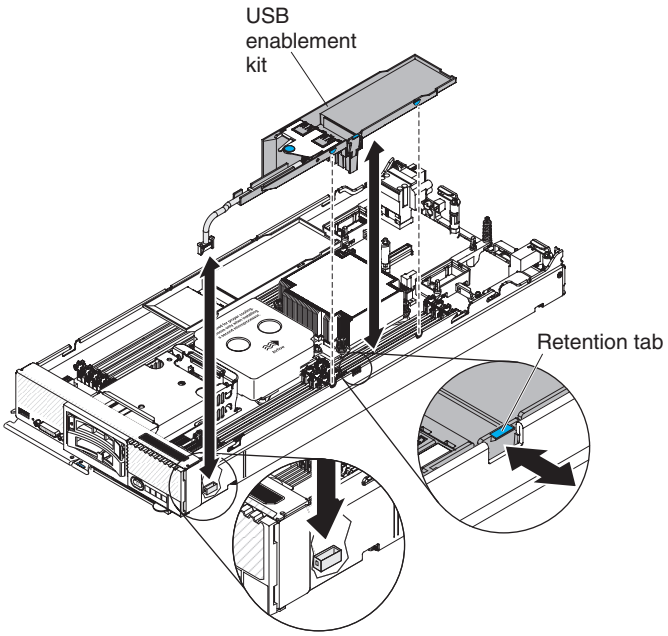

1. Remove the cover (see "Removing the compute node cover" on page 575).
2. Remove any USB flash drives that are installed in the USB connectors (see "Removing the USB flash drive" on page 613).
3. Disconnect the USB cable from the system board.
4. Release the retention tab from the side of the chassis and remove the USB enablement kit from the compute node.
5. Install an air baffle over the DIMM connectors.

   Attention: To maintain proper system cooling, do not operate the compute node without air baffles installed over the DIMM connectors.

What to do next

If you are instructed to return the USB enablement kit, follow all packaging instructions, and use any packaging materials for shipping that are supplied to you.

Installing the USB enablement kit

Use this information to install the USB enablement kit.

Before you begin

Before you install the USB enablement kit, complete the following steps:

1. Read "Safety" on page v and "Installation guidelines" on page 569.
2. If the compute node is installed in a chassis, remove it (see "Removing a compute node from a chassis" on page 571 for instructions).

3. Carefully lay the compute node on a flat, static-protective surface, orienting the compute node with the bezel pointing toward you.

About this task

This component can be installed as an optional device or as a CRU. The installation procedure is the same for the optional device and the CRU.

Procedure

To install the USB enablement kit, complete the following steps:

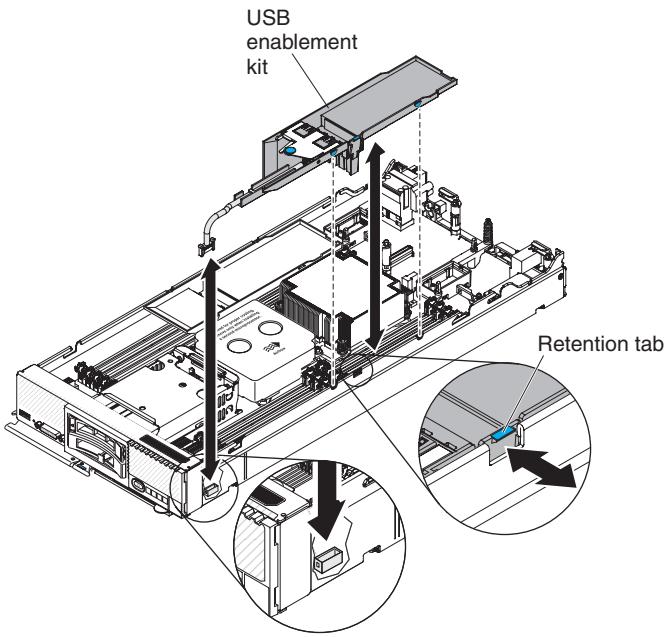

1. Remove the cover (see "Removing the compute node cover" on page 575).
2. Remove the air baffle next to the USB connector.
3. Install the USB enablement kit over the DIMM connectors.
4. Press the retention tab into the matching notch in the chassis to secure the kit.
5. Locate the USB connector on the system board (see "System-board connectors" on page 16).
6. Connect the USB cable to the USB connector on the system board.
7. Install any USB flash drives in the connectors (see "Installing the USB flash drive" on page 614).

What to do next

After you install the USB enablement kit, complete the following steps:

1. Install the cover onto the compute node (see "Installing the compute node cover" on page 577 for instructions).
2. Install the compute node into the chassis (see "Installing a compute node in a chassis" on page 572 for instructions).

Removing the USB flash drive

Use this information to remove the USB flash drive.

Before you begin

Before you remove the USB flash drive, complete the following steps:

1. Read "Safety" on page v and "Installation guidelines" on page 569.
2. If the compute node is installed in a chassis, remove it (see "Removing a compute node from a chassis" on page 571 for instructions).
3. Carefully lay the compute node on a flat, static-protective surface, orienting the compute node with the bezel pointing toward you.

Procedure

To remove the USB flash drive, complete the following steps.

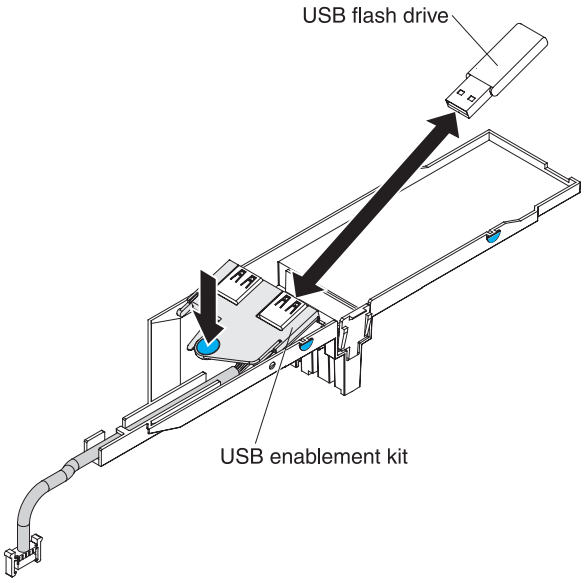

1. Remove the cover (see "Removing the compute node cover" on page 575).
2. Press the USB enablement kit to access the USB flash drive connectors.
3. Pull the USB flash drive out of the connector.

What to do next

If you are instructed to return the USB flash drive, follow all packaging instructions, and use any packaging materials for shipping that are supplied to you.

Installing the USB flash drive

Use this information to install the USB flash drive.

Before you begin

Before you install the USB flash drive, complete the following steps:

1. Read "Safety" on page v and "Installation guidelines" on page 569.
2. If the compute node is installed in a chassis, remove it (see "Removing a compute node from a chassis" on page 571 for instructions).
3. Carefully lay the compute node on a flat, static-protective surface, orienting the compute node with the bezel pointing toward you.

About this task

This component can be installed as an optional device or as a CRU. The installation procedure is the same for the optional device and the CRU.

Procedure

To install the USB flash drive, complete the following steps.

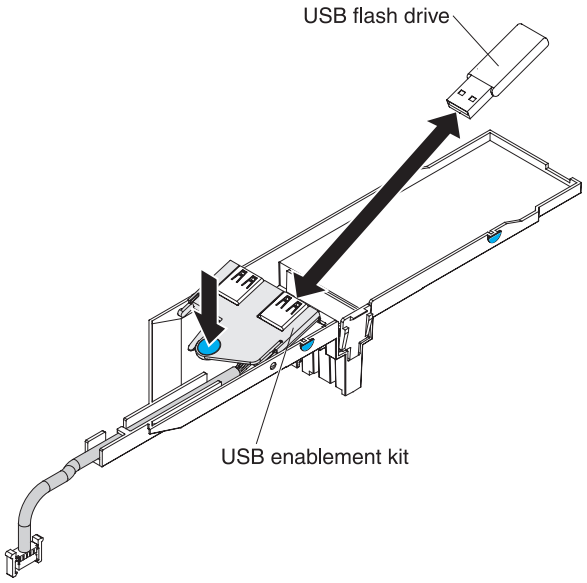

1. Remove the cover (see "Removing the compute node cover" on page 575).
2. Press on the USB enablement kit to access the USB flash drive connectors.
3. Push the USB flash drive into the connector.

What to do next

After you install the USB flash drive, complete the following steps:

1. Install the cover onto the compute node (see "Installing the compute node cover" on page 577 for instructions).
2. Install the compute node into the chassis (see "Installing a compute node in a chassis" on page 572 for instructions).

Removing and replacing Tier 2 customer replaceable units (CRUs)

Use this information for removing and replacing Tier 2 CRUs.

About this task

You may install a Tier 2 CRU yourself or request IBM to install it, at no additional charge, under the type of warranty service that is designated for the compute node.

Removing a microprocessor and heat sink

Use this information to remove a microprocessor and heat sink.

Before you begin

Note: This procedure should be performed only by trained service technicians.

Before you remove the microprocessor and heat sink, complete the following steps:

1. Read "Safety" on page v and "Installation guidelines" on page 569.
2. If the compute node is installed in a chassis, remove it (see "Removing a compute node from a chassis" on page 571 for instructions).
3. Carefully lay the compute node on a flat, static-protective surface, orienting the compute node with the bezel pointing toward you.

About this task

The following notes describe information that you must consider when you remove a microprocessor:

- Each microprocessor socket must always contain a socket cover and heat-sink filler or a microprocessor and heat sink. If the compute node has only one microprocessor, it must be installed in microprocessor socket 1.
- The microprocessor installation tool might become worn after several uses. Make sure that the tool can hold the microprocessor securely if you are reusing an existing microprocessor installation tool. Do not return the tool with other parts that you are returning.
- If you are installing a second microprocessor, the option kit comes with a microprocessor installation tool that you must use when you install a microprocessor. The microprocessor installation tool comes with the replacement microprocessor installed on it and a cover over the microprocessor.
- If you are replacing a defective microprocessor, the CRU kit comes with one installation tool with the replacement microprocessor installed on it and a cover over the microprocessor, and one empty installation tool without a cover.
- If you are replacing a defective microprocessor, you must obtain the following for use during the replacement procedure (see Chapter 5, "Parts listing, Types 7863, 8737, 8738, and 8956," on page 53).
  - Alcohol wipes
  - Thermal grease

Note: Be sure to use the installation tool that comes with your microprocessor installation tool assembly. The tools are similar in function and design, however Tool A has one setting for installing one size of microprocessor, and supports the following families of microprocessors: E5-26xx, E5-46xx. Installation Tool B has two settings for installing two different sizes of microprocessors. The settings that are marked on Tool B are "L" for smaller low core microprocessors, and "H" for larger high core microprocessors. Installation Tool B supports the following families of microprocessors: E5-26xx, E5-46xx, E5-26xx v2, E5-46xx v2.
Microprocessor Installation Tools A and B are shown in the following illustration.

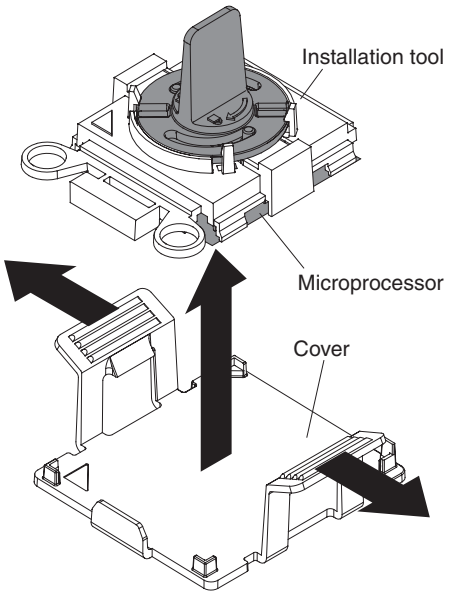

Microprocessor Installation Tool A

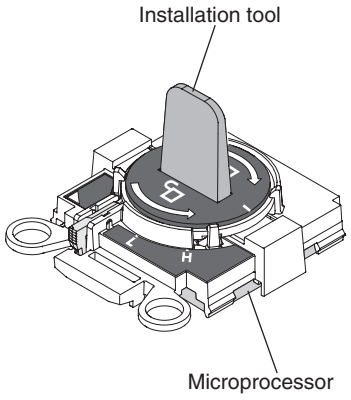

Microprocessor Installation Tool B

Procedure

To remove a microprocessor and heat sink, complete the following steps.

1. Remove the cover (see "Removing the compute node cover" on page 575).
2. Locate the microprocessor that is to be removed (see "System-board connectors" on page 16).
3. Remove the heat sink.

   Attention: Do not touch the thermal material on the bottom of the heat sink. Touching the thermal material will contaminate it.

   a. Use a screwdriver to loosen the screw on one side of the heat sink to break the seal with the microprocessor.
   b. Use a screwdriver to loosen the screws on the heat sink, rotating each screw two full turns until each screw is loose.
   c. Gently pull the heat sink from the microprocessor.

   Attention: Do not use any tools or sharp objects to lift the release levers on the microprocessor socket. Doing so might result in permanent damage to the system board.
4. Open the microprocessor socket release levers and retainer.

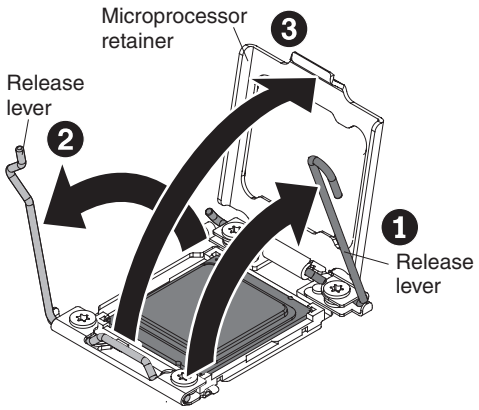

a. Identify which release lever is labeled as the first release lever to open, and open it.
b. Open the second release lever on the microprocessor socket.
c. Open the microprocessor retainer.

Attention: Do not touch the connectors on the microprocessor and the microprocessor socket.

5. Remove the microprocessor from the socket:

Note: If you are replacing a microprocessor, use the empty installation tool that comes with the CRU kit to remove the microprocessor.

a. Twist the handle on the microprocessor tool counterclockwise so that it is in the open position.

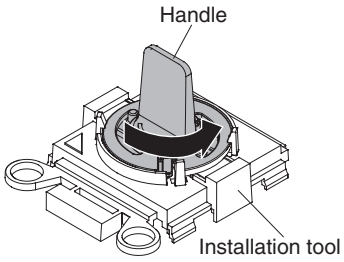

b. Align the installation tool with the screws on the microprocessor socket, and lower the tool on the microprocessor. The installation tool rests flush on the socket only if it is aligned correctly.

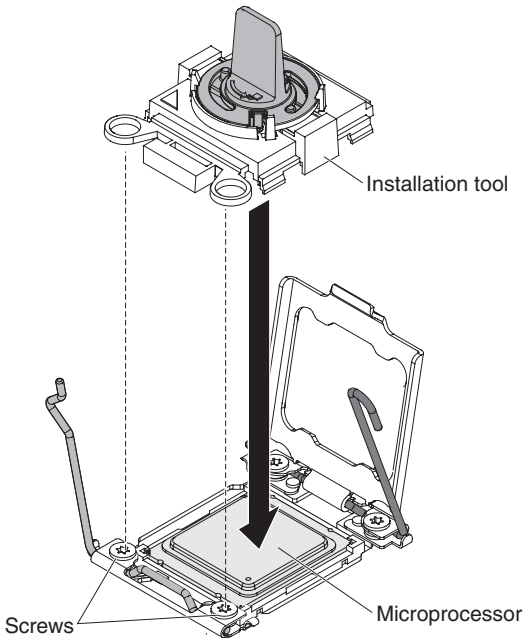

c. Twist the handle on the installation tool clockwise and lift the microprocessor out of the socket.

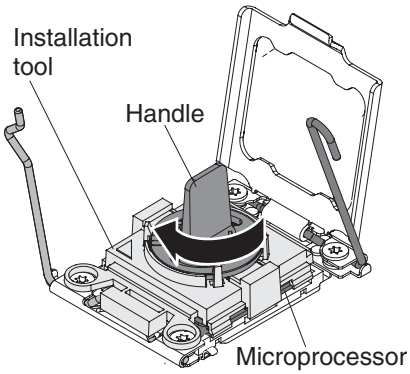

6. Remove the microprocessor from the socket.
   a. Select the empty installation tool and ensure that the handle is in the open position. If the installation tool handle is not in the open position, use the following instructions for your installation tool:
      - If using Installation Tool A, twist the microprocessor installation tool handle counterclockwise to the open position.
      - If using Installation Tool B, 1) lift the interlock latch and hold it up while you 2) twist the microprocessor installation tool handle counterclockwise to the open position, and then release the interlock latch. The following illustration of the installation tool shows the location of the interlock latch and counterclockwise rotation of the handle before loading the microprocessor.

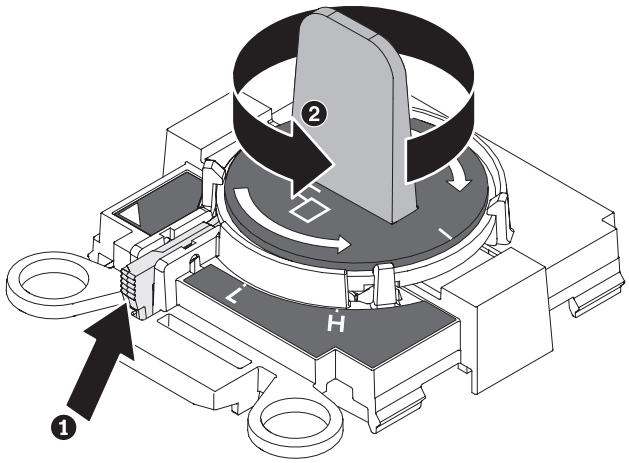

b. Align the installation tool with the screws, as shown in the following graphic, and lower the installation tool on the microprocessor. The installation tool rests flush on the socket only when it is aligned correctly.

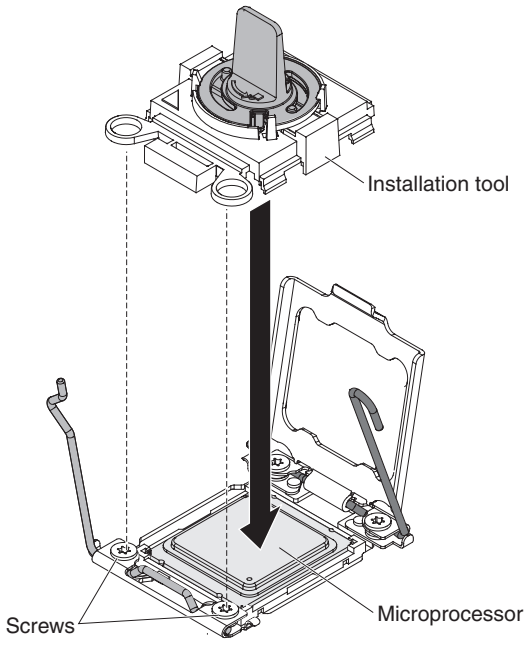

c. Using the following instructions for your installation tool, remove the microprocessor.
   - If using Installation Tool A, gently twist the handle clockwise to the closed position and lift the microprocessor out of the socket.
   - If using Installation Tool B, gently twist the handle of the installation tool clockwise until it locks in the "H" or "L" position, depending on the size of microprocessor, and then lift the microprocessor out of the socket.

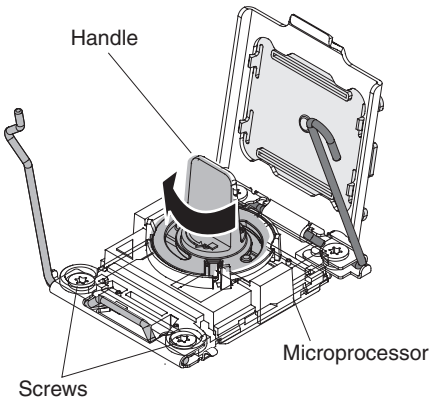

What to do next

If you are instructed to return the microprocessor and heat sink, follow all packaging instructions, and use any packaging materials for shipping that are supplied to you.

Installing a microprocessor and heat sink

Use this information to install a microprocessor and heat sink.

Before you begin

Note: This procedure should be performed only by trained service technicians.

Before you install a microprocessor and heat sink, complete the following steps:

1. Read "Safety" on page v and "Installation guidelines" on page 569.
2. If the compute node is installed in a chassis, remove it (see "Removing a compute node from a chassis" on page 571 for instructions).
3. Carefully lay the compute node on a flat, static-protective surface, orienting the compute node with the bezel pointing toward you.

About this task

The following notes describe the type of microprocessor that the compute node supports and other information that you must consider when you install a microprocessor:

- This component can be installed as an optional device or as a CRU. The installation procedure is the same for the optional device and the CRU.
- The optional microprocessors that IBM supports are limited by the capacity and capability of the compute node. Any microprocessors that you install must have the same specifications as the microprocessors that came with the compute node.
- Each microprocessor socket must always contain a socket cover and heat-sink filler or a microprocessor and heat sink. If the compute node has only one microprocessor, it must be installed in microprocessor socket 1.
- If you are installing a second microprocessor, make sure that the microprocessors are identical.
- Before you install a new microprocessor, download and install the most current level of UEFI code (see "Updating firmware and device drivers" on page 21).

- When you install a second microprocessor, you might have to install additional memory or redistribute memory across the DIMM connectors. See “Installing a DIMM” on page 591.
- The microprocessor installation tool might become worn after several uses. Make sure that the tool can hold the microprocessor securely if you are reusing an existing microprocessor installation tool. Do not return the tool with other parts that you are returning.
- If you are installing a second microprocessor, the microprocessor option kit comes with a microprocessor installation tool that you must use when you install a microprocessor. The microprocessor installation tool comes with the replacement microprocessor installed on it and a cover over the microprocessor.
- If you are replacing a defective microprocessor, the CRU kit comes with one installation tool with the replacement microprocessor installed on it and a cover over the microprocessor, and one empty installation tool without a cover.
- If you are replacing a defective microprocessor, you must obtain the following for use during the replacement procedure (see Chapter 5, “Parts listing, Types 7863, 8737, 8738, and 8956,” on page 53).
  - Alcohol wipes
  - Thermal grease

Attention:

1. Do not use any tools or sharp objects to lift the locking levers on the microprocessor socket. Doing so might result in permanent damage to the system board.
2. Do not touch the contacts in the microprocessor socket. Touching these contacts might result in permanent damage to the system board.

Note: Be sure to use the installation tool that comes with your microprocessor installation tool assembly. The tools are similar in function and design, however Tool A has one setting for installing one size of microprocessor, and supports the following families of microprocessors: E5-26xx, E5-46xx. Installation Tool B has two settings for installing two different sizes of microprocessors. The settings that are marked on Tool B are “L” for smaller low core microprocessors, and “H” for larger high core microprocessors. Installation Tool B supports the following families of microprocessors: E5-26xx, E5-46xx, E5-26xx v2, E5-46xx v2.
Microprocessor Installation Tools A and B are shown in the following illustration.

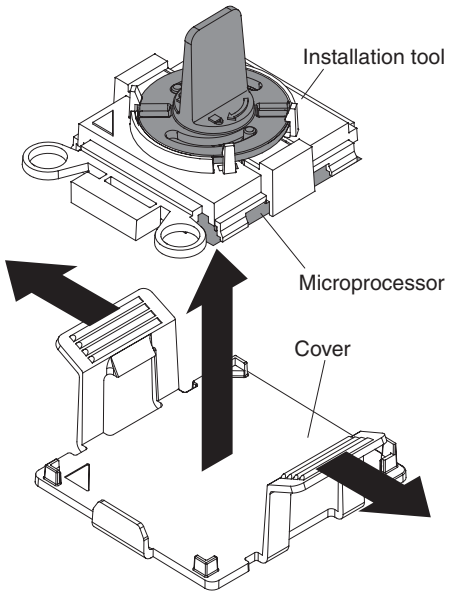

Microprocessor Installation Tool A

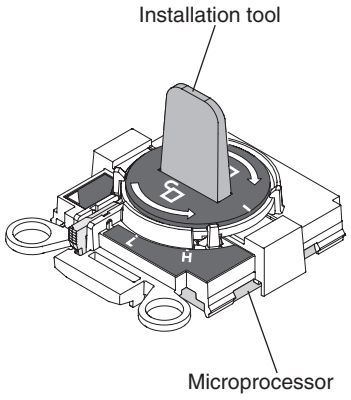

Microprocessor Installation Tool B

Procedure

To install a microprocessor and heat sink, complete the following steps.

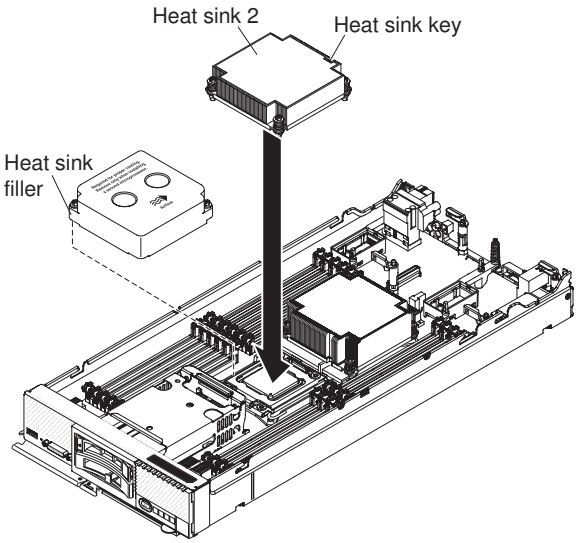

1. Remove the cover (see "Removing the compute node cover" on page 575).
2. If you are not installing a new microprocessor and a new heat sink, remove the thermal grease from the heat sink and microprocessor; then, apply new thermal grease before installation (see "Thermal grease" on page 628).
3. Remove the heat-sink filler, if one is present.
4. Open the microprocessor socket release levers and retainer.

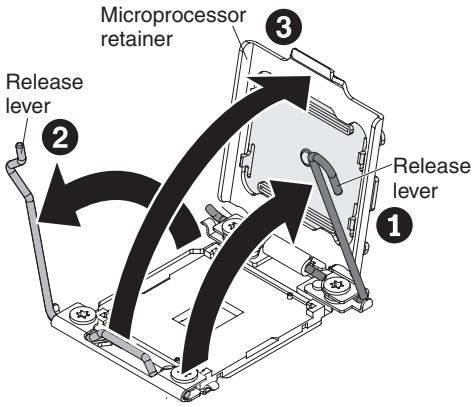

a. Identify which release lever is labeled as the first release lever to open and open it.
b. Open the second release lever on the microprocessor socket.
c. Open the microprocessor retainer.

5. Install the microprocessor on the microprocessor socket:
   a. Touch the static-protective bag that contains the new microprocessor to any *unpainted* surface on the IBM Flex System chassis or any *unpainted* metal surface on any other grounded rack component; then, carefully remove the microprocessor and installation tool from the package.
   b. Release the sides of the cover and remove the cover from the installation tool. The microprocessor is preinstalled on the installation tool.

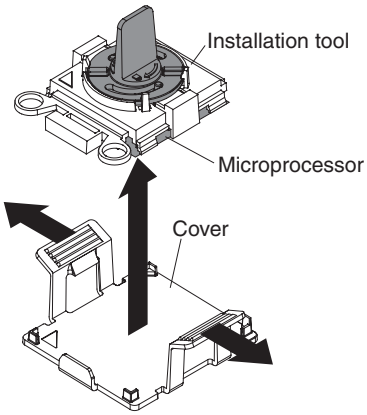

Note: Do not touch the microprocessor contacts. Contaminants on the microprocessor contacts, such as oil from your skin, can cause connection failures between the contacts and the socket.

   c. Align the installation tool with the microprocessor socket. The installation tool rests flush on the socket only if it is properly aligned.

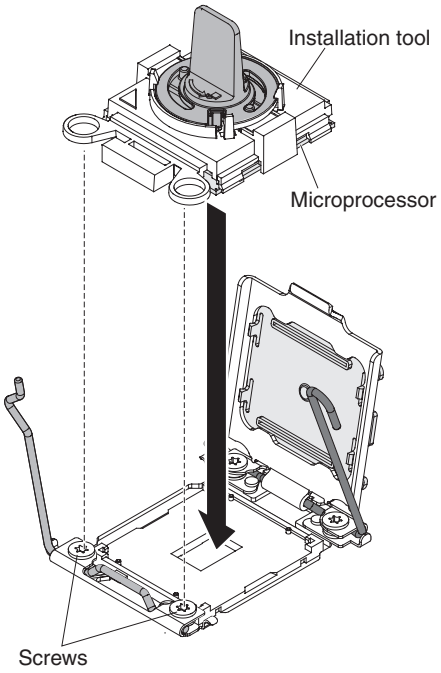

d. Twist the handle on the microprocessor tool counterclockwise to insert the microprocessor into the socket. The microprocessor is keyed to ensure that the microprocessor is installed correctly. The microprocessor rests flush on the socket only if it is properly installed.

   Attention:

   - Do not press the microprocessor into the socket.
   - Make sure that the microprocessor is oriented and aligned correctly in the socket before you try to close the microprocessor retainer.
   - Do not touch the thermal material on the bottom of the heat sink or on top of the microprocessor. Touching the thermal material will contaminate it.

6. Install the microprocessor in the microprocessor socket.
   a. Open the packaging that contains the new microprocessor installation tool assembly and carefully remove the installation tool assembly from the package.

      Note: Do not touch the microprocessor contacts. Contaminants on the microprocessor contacts, such as oil from your skin, can cause connection failures between the contacts and the socket.

   b. Remove the microprocessor protective cover if one is present.

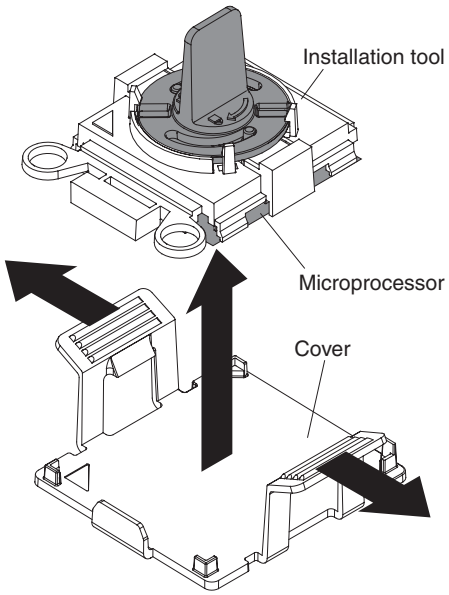

c. Align the installation tool with the microprocessor socket. The installation tool rests flush on the socket only if it is properly aligned.

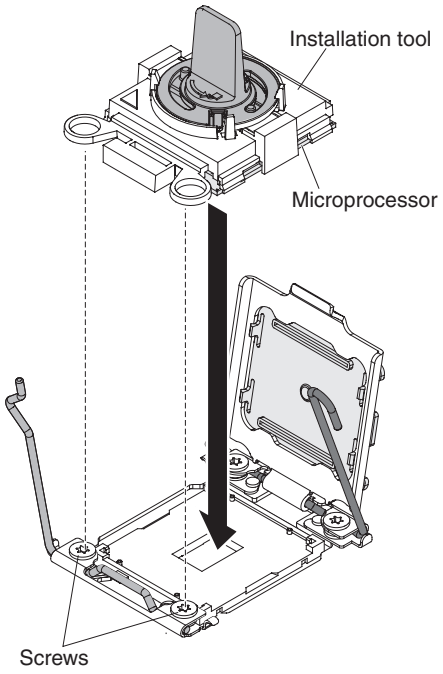

d. Install the microprocessor using the following instructions for your installation tool.
   - If using Installation Tool A, twist the handle on the microprocessor tool assembly counterclockwise to the open position to insert the microprocessor into the socket, and lift the installation tool out of the socket.
   - If using Installation Tool B, twist the handle of the installation tool assembly counterclockwise until the microprocessor is inserted into the socket, and lift the installation tool out of the socket. The following illustration shows the tool handle in the open position.

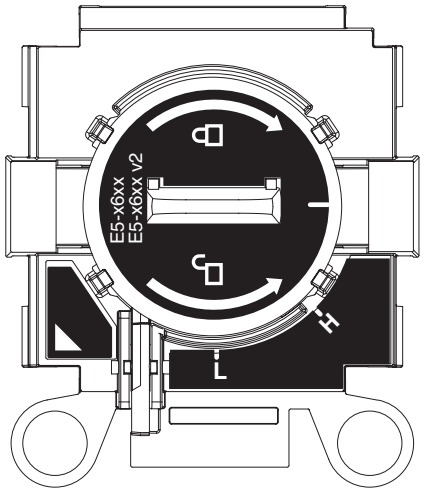

Attention:

- Do not press the microprocessor into the socket.
- Make sure that the microprocessor is aligned correctly in the socket before you try to close the microprocessor retainer.
- Do not touch the thermal grease on the bottom of the heat sink or on top of the microprocessor. Touching the thermal grease will contaminate it.

7. Close the microprocessor socket release retainer and levers.

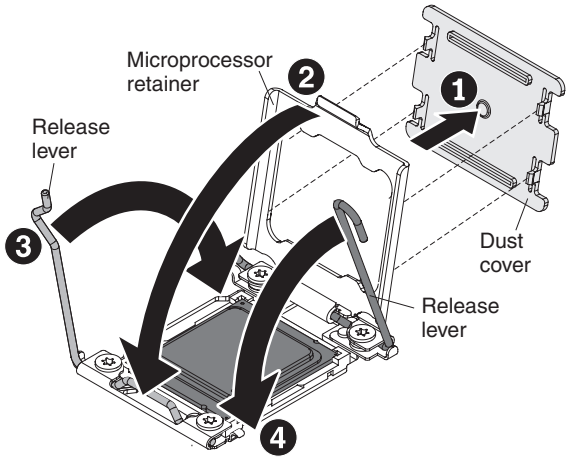

a. If a socket dust cover is installed over the microprocessor retainer, remove the dust cover from the compute node and store it in a safe place.
b. Close the microprocessor retainer on the microprocessor socket.
c. Identify which release lever is labeled as the first release lever to close, and close it.
d. Close the second release lever on the microprocessor socket.

Attention:

- If you are installing a new heat sink, do not set down the heat sink after you remove the plastic cover.
- Do not touch the thermal material on the bottom of the heat sink. Touching the thermal material will contaminate it.

8. If you are installing a new heat sink, remove the plastic protective cover from the bottom of the heat sink. If you are reinstalling a heat sink that you

previously removed from the compute node, make sure that the thermal material is still on the bottom of the heat sink and on the top of the microprocessor.

a. Position the heat sink over the microprocessor. The heat sink is keyed to assist with proper alignment.
b. Align and place the heat sink on top of the microprocessor in the retention bracket, thermal material side down.
c. Press firmly on the heat sink.
d. Align the screws on the heat sink with the holes on the heat-sink retention module.
e. Press firmly on the captive screws and tighten them with a screwdriver, alternating among the screws until they are tight. If possible, each screw should be rotated two full rotations at a time. Repeat until the screws are tight. Do not overtighten the screws by using excessive force. If you are using a torque wrench, tighten the screws to 8 inch-pounds (in-lb) to 10 in-lb (0.9 Newton-meters (Nm) to 1.13 Nm). Refer to the label on the heat sink for more information.

What to do next

After you install a microprocessor and heat sink, complete the following steps:

1. Install the cover (see "Installing the compute node cover" on page 577).
2. Install the compute node in a IBM Flex System chassis (see "Installing a compute node in a chassis" on page 572 for instructions).

Thermal grease

Use this information to determine the guidelines for using thermal grease on a heat sink and microprocessor.

About this task

The thermal grease must be replaced whenever the heat sink has been removed from the top of the microprocessor and is going to be reused or when debris is found in the grease.

To replace damaged or contaminated thermal grease on the microprocessor and heat sink, complete the following steps:

Procedure

1. Place the heat-sink assembly on a clean work surface.
2. Remove the cleaning pad from its package and unfold it completely.
3. Use the cleaning pad to wipe the thermal grease from the bottom of the heat sink.

   Note: Make sure that all of the thermal grease is removed.
4. Use a clean area of the cleaning pad to wipe the thermal grease from the microprocessor; then, dispose of the cleaning pad after all of the thermal grease is removed.

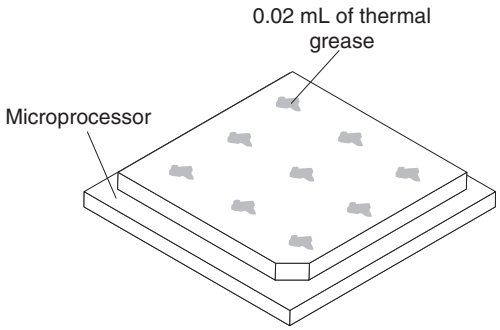

5. Use the thermal-grease syringe to place nine uniformly spaced dots of 0.02 mL each on the top of the microprocessor.

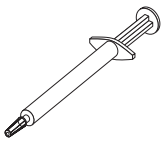

Note: 0.01mL is one tick mark on the syringe. If the grease is properly applied, approximately half (0.22 mL) of the grease will remain in the syringe.

6. Continue with the microprocessor installation instructions in "Installing a microprocessor and heat sink" on page 621.

Removing a microprocessor-retention assembly

Use this information to remove a microprocessor-retention assembly.

Before you begin

Before you remove the microprocessor-retention assembly, complete the following steps.

1. Read "Safety" on page v and "Installation guidelines" on page 569.
2. If the compute node is installed in a chassis, remove it (see "Removing a compute node from a chassis" on page 571 for instructions).
3. Carefully lay the compute node on a flat, static-protective surface, orienting the compute node with the bezel pointing toward you.

Procedure

To remove a microprocessor-retention assembly, complete the following steps.

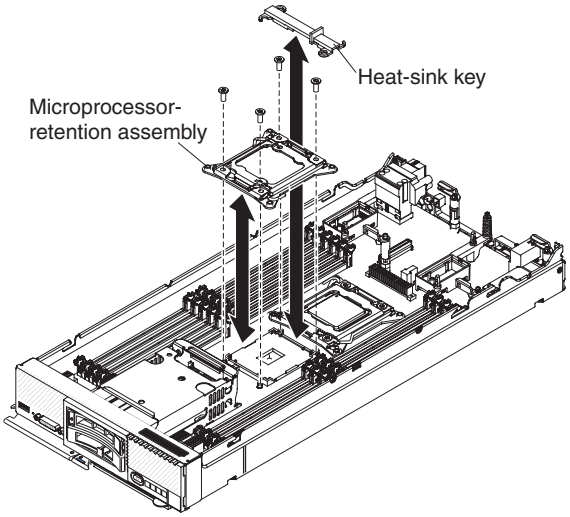

1. Remove the cover (see "Removing the compute node cover" on page 575).
2. Locate the microprocessor connector on the system board (see "System-board layouts" on page 16).
3. If a microprocessor and heat sink are installed, remove them (see "Removing a microprocessor and heat sink" on page 615).
4. Remove the heat-sink key from the microprocessor-retention assemblies and store it in a safe place.
5. Make sure that the microprocessor socket release levers are in the open position.
6. Using a T20 Torx screwdriver, remove the four screws that secure the microprocessor-retention assembly.

   Attention:

   a. Do not allow the microprocessor-retention assembly to touch the microprocessor socket. Doing so might result in permanent damage to the system board.

   b. Do not touch the contacts in the microprocessor socket. Touching these contacts might result in permanent damage to the system board.
7. Lift the microprocessor-retention assembly from the system board.

What to do next

If you are instructed to return the microprocessor-retention assembly, follow all packaging instructions, and use any packaging materials for shipping that are supplied to you.

Installing a microprocessor-retention assembly

Use this information to install a microprocessor-retention assembly.

Before you begin

Before you install a microprocessor-retention assembly, complete the following steps:

1. Read "Safety" on page v and "Installation guidelines" on page 569.

2. If the compute node is installed in a chassis, remove it (see "Removing a compute node from a chassis" on page 571 for instructions).
3. Carefully lay the compute node on a flat, static-protective surface, orienting the compute node with the bezel pointing toward you.

Procedure

To install a microprocessor-retention assembly, complete the following steps.

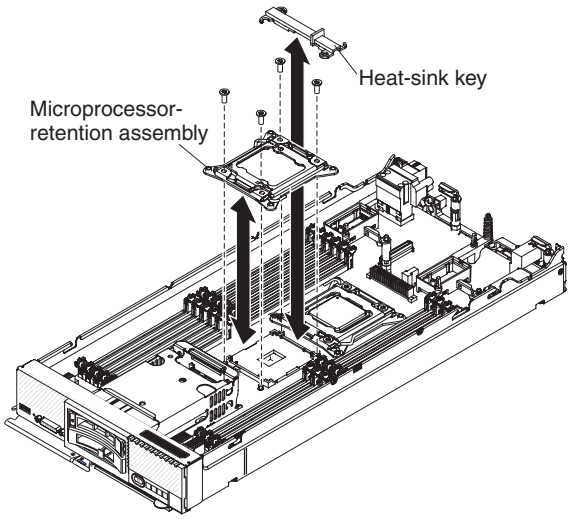

1. Remove the cover (see "Removing the compute node cover" on page 575).
2. Make sure that the microprocessor socket release levers are in the open position.
3. Align the microprocessor-retention assembly on the system board.

   Attention:

   a. Do not allow the microprocessor-retention assembly to touch the microprocessor socket. Doing so might result in permanent damage to the system board.

   b. Do not touch the contacts in the microprocessor socket. Touching these contacts might result in permanent damage to the system board.
4. Using a T20 Torx screwdriver, install the four screws to secure the microprocessor-retention assembly.
5. Install the heat-sink key on the microprocessor retention assemblies.
6. If necessary, install the microprocessor and heat sink (see "Installing a microprocessor and heat sink" on page 621).

What to do next

After you install the microprocessor-retention assembly, complete the following steps:

1. Install the cover onto the compute node (see "Installing the compute node cover" on page 577 for instructions).
2. Install the compute node into the chassis (see "Installing a compute node in a chassis" on page 572 for instructions).

Removing the system-board assembly

Use this information to remove the system-board assembly.

Before you begin

Note: This procedure should be performed only by trained service technicians.

Before you remove the system-board assembly, complete the following steps:

1. Read "Safety" on page v and "Installation guidelines" on page 569.
2. If the compute node is installed in a chassis, remove it (see "Removing a compute node from a chassis" on page 571 for instructions).
3. Carefully lay the compute node on a flat, static-protective surface, orienting the compute node with the bezel pointing toward you.
4. Obtain the following for use during the replacement procedure (see Chapter 5, "Parts listing, Types 7863, 8737, 8738, and 8956," on page 53).
   - Alcohol wipes
   - Thermal grease
   - RFID tag (required only if the compute node came with a RFID tag attached to the bezel)

About this task

Important: When you replace the system board, you must update the compute node with the latest firmware or restore the preexisting firmware. Make sure that you have the latest firmware or a copy of the preexisting firmware before you proceed. See "Updating firmware and device drivers" on page 21 for more information.

See "System-board layouts" on page 16 for more information about the locations of the connectors, jumpers, and LEDs on the system board.

Procedure

To remove the system-board assembly, complete the following steps:

1. Remove the cover (see "Removing the compute node cover" on page 575).
2. Remove all of the installed components in the following list from the system-board assembly; then, place them on a static-protective surface or install them on the new system-board assembly.
   - DIMMs. See "Removing a DIMM" on page 589.
   - Fabric connector. See "Removing a fabric connector" on page 597.
   - I/O expansion adapters. See "Removing an I/O expansion adapter" on page 605.
   - Storage drive and solid state drives. See "Removing a hot-swap hard disk drive" on page 601.
   - Hard disk drive backplane. See "Removing the hard disk drive backplane" on page 599.
   - Microprocessors, heat sinks, and microprocessor heat sink fillers. Use the microprocessor installation tool that comes with the CRU kit to remove each microprocessor from the system-board assembly and install each one immediately in the new system-board assembly (see "Removing a microprocessor and heat sink" on page 615 and "Installing a microprocessor and heat sink" on page 621).
3. If you are replacing the old system-board assembly with a new system-board assembly, carefully remove the bezel from the old system-board assembly and install it on the new system-board assembly (see "Removing the bezel" on page 585

585 and “Installing the bezel” on page 586). If the old bezel will not attach securely to the new system board, remove the Tag from the lower right corner of the old bezel and install it on the lower right corner of the new bezel that shipped with the new system-board assembly; then, install the new bezel on the new system-board assembly.

What to do next

If you are instructed to return the system-board assembly, follow all packaging instructions, and use any packaging materials for shipping that are supplied to you.

Installing the system-board assembly

Use this information to install the system-board assembly.

Before you begin

Note: This procedure should be performed only by trained service technicians.

Before you install the system-board assembly, complete the following steps:

1. Read “Safety” on page v and “Installation guidelines” on page 569.
2. If the compute node is installed in a chassis, remove it (see “Removing a compute node from a chassis” on page 571 for instructions).
3. Carefully lay the compute node on a flat, static-protective surface, orienting the compute node with the bezel pointing toward you.
4. Obtain the following for use during the replacement procedure (see Chapter 5, “Parts listing, Types 7863, 8737, 8738, and 8956,” on page 53).
   - Alcohol wipes
   - Bezel
   - RFID tag (required only if the compute node came with a RFID tag attached to the bezel)
   - Thermal grease

About this task

Important: When you replace the system board, you must update the compute node with the latest firmware or restore the preexisting firmware. Make sure that you have the latest firmware or a copy of the preexisting firmware before you proceed. See “Updating firmware and device drivers” on page 21 for more information.

Procedure

To install the system-board assembly, complete the following steps:

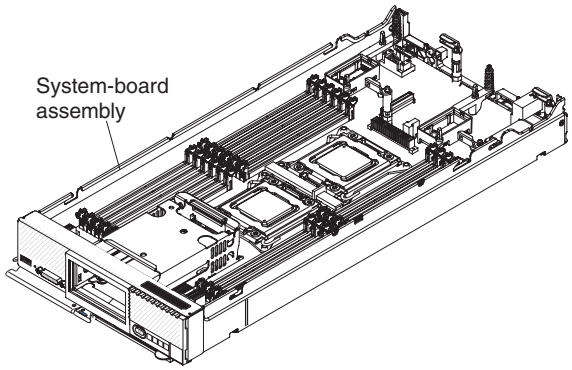

1. Install all of the components in the following list that you removed from the old system-board assembly onto the new system-board assembly.
   - DIMMs and air baffles See “Installing a DIMM” on page 591.
   - Fabric connector. See “Installing a fabric connector” on page 598.
   - I/O expansion adapters See “Installing an I/O expansion adapter” on page 606.
   - Storage drive and solid state drives. See “Removing a hot-swap hard disk drive” on page 601.
   - Hard disk drive backplane. See “Installing the hard disk drive backplane” on page 600.
   - Microprocessors, heat sinks, and microprocessor heat sink fillers. Use the microprocessor installation tool that comes with the CRU kit to remove each microprocessor from the system-board assembly and install each one immediately in the new system-board assembly See “Removing a microprocessor and heat sink” on page 615 and “Installing a microprocessor and heat sink” on page 621.
2. If you are installing a new system-board assembly and did not install the old bezel on the new system-board assembly, carefully remove the bezel from the old system-board assembly and install it on the new system-board assembly (see “Removing the bezel” on page 585 and “Installing the bezel” on page 586). If the old bezel will not attach securely to the new system-board assembly, remove the Tag from the lower right corner of the old bezel and install it on the lower right corner of the new bezel that shipped with the new system-board assembly; then, install the new bezel on the new system-board assembly.
3. The new system-board assembly comes with an IBM Repair Identification (RID) tag. Using a ball point pen, transfer the machine type and serial number from the old system-board assembly to the two labels on the IBM Repair Identification tag; then, place Tag 1 on the label tab (see “Installing a compute node in a chassis” on page 572) and Tag 2 on the bottom of the compute node. If you installed the new bezel on the new system-board assembly because the old bezel was damaged and did not transfer the Tag from the old bezel to the new bezel, install Tag 3 on the lower right corner of the new bezel. If you installed the old bezel on the new system-board assembly or transferred the Tag from the old bezel to the new bezel, discard Tag 3.

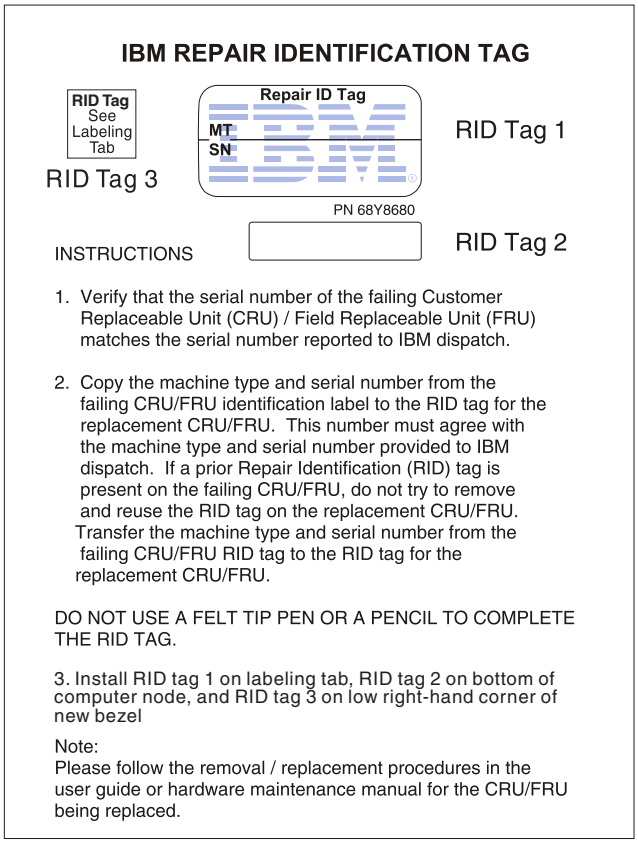

What to do next

After you install the system-board assembly, complete the following steps:

1. Install the cover onto the compute node (see "Installing the compute node cover" on page 577 for instructions).
2. Install the compute node into the chassis (see "Installing a compute node in a chassis" on page 572 for instructions).
3. Use the CMM Web Interface to restore the IP address of the compute node IMM. See for more information.

   Note: If you configured static IP addresses, you will not be able to access the node remotely or from the FSM until the IP address of the IMM is restored.
4. Reactivate any Features on Demand features. Instructions for automating the activation of features and installing activation keys is in the *IBM Features on Demand Users Guide*. To download the document, go to http://www.ibm.com/systems/x/fod/, log in, and click **Help**.
5. Update the Universally Unique Identifier (UUID) and DMI/SMBIOS data with new vital product data (VPD). Use the Advanced Settings Utility to update the UUID and DMI/SMBIOS data (see "Updating the Universally Unique Identifier (UUID) and DMI/SMBIOS data with vital product data" on page 31).
6. Update the compute node with the latest firmware or restore the preexisting firmware (see "Updating firmware and device drivers" on page 21 for more information).

Appendix. Getting help and technical assistance

If you need help, service, or technical assistance or just want more information about IBM products, you will find a wide variety of sources available from IBM to assist you.

Use this information to obtain additional information about IBM and IBM products, determine what to do if you experience a problem with your IBM system or optional device, and determine whom to call for service, if it is necessary.

Before you call

Before you call, make sure that you have taken these steps to try to solve the problem yourself.

If you believe that you require IBM to perform warranty service on your IBM product, the IBM service technicians will be able to assist you more efficiently if you prepare before you call.

- Check for updated software, firmware, and operating-system device drivers for your IBM product. The IBM Warranty terms and conditions state that you, the owner of the IBM product, are responsible for maintaining and updating all software and firmware for the product (unless it is covered by an additional maintenance contract). Your IBM service technician will request that you upgrade your software and firmware if the problem has a documented solution within a software upgrade.

  Determine whether the firmware and device drivers for the devices in the IBM Flex System Enterprise Chassis are up to date. You can use the IBM Flex System Manager Update Manager to automatically acquire, install, and manage firmware and device-driver updates for the devices in the chassis.
- If you have installed new hardware or software in your environment, check http://www.ibm.com/systems/info/x86servers/serverproven/compat/us to make sure that the hardware and software is supported by your IBM product.
- Go to http://www.ibm.com/supportportal to check for information to help you solve the problem.
- Gather the following information to provide to IBM Support. This data will help IBM Support quickly provide a solution to your problem and ensure that you receive the level of service for which you might have contracted.
  - Hardware and Software Maintenance agreement contract numbers, if applicable
  - Machine type number (IBM 4-digit machine identifier)
  - Model number
  - Serial number
  - Current system UEFI and firmware levels
  - Other pertinent information such as error messages and logs
- Submit a manual service request through the IBM Flex System Manager management software. When you submit a manual service request, service data about the problem is included in the request, which will help IBM Support more quickly begin to diagnose the problem.

© Copyright IBM Corp. 2013, 2014

- Go to http://www.ibm.com/support/entry/portal/Open_service_request to submit an Electronic Service Request. Submitting an Electronic Service Request will start the process of determining a solution to your problem by making the pertinent information available to IBM Support quickly and efficiently. IBM service technicians can start working on your solution as soon as you have completed and submitted an Electronic Service Request.

Using the documentation

Information about your IBM system and preinstalled software, if any, or optional device is available in the documentation that comes with the product. That documentation can include printed documents, online documents, readme files, and help files.

See the troubleshooting information in your system documentation for instructions for using the diagnostic programs. The troubleshooting information or the diagnostic programs might tell you that you need additional or updated device drivers or other software. IBM maintains pages on the World Wide Web where you can get the latest technical information and download device drivers and updates. To access these pages, go to http://www.ibm.com/supportportal.

You can find the most up-to-date information for the IBM Flex System product family at http://pic.dhe.ibm.com/infocenter/flexsys/information/index.jsp.

Getting help and information from the World Wide Web

Up-to-date information about IBM products and support is available on the World Wide Web.

On the World Wide Web, up-to-date information about IBM systems, optional devices, services, and support is available at http://www.ibm.com/supportportal.

You can find the most up-to-date product information for the IBM Flex System product family at http://pic.dhe.ibm.com/infocenter/flexsys/information/index.jsp.

How to send DSA data to IBM

Use the IBM Enhanced Customer Data Repository to send diagnostic data to IBM.

Before you send diagnostic data to IBM, read the terms of use at http://www.ibm.com/de/support/ecurep/terms.html.

You can use any of the following methods to send diagnostic data to IBM:

- **Standard upload:** http://www.ibm.com/de/support/ecurep/send_http.html
- **Standard upload with the system serial number:** http://www.ecurep.ibm.com/app/upload_hw
- **Secure upload:** http://www.ibm.com/de/support/ecurep/send_http.html#secure
- **Secure upload with the system serial number:** https://www.ecurep.ibm.com/app/upload_hw

Software service and support

Through IBM Support Line, you can get telephone assistance, for a fee, with usage, configuration, and software problems with your IBM products.

For information about which products are supported by Support Line in your country or region, see http://www.ibm.com/services/supline/products.

For more information about Support Line and other IBM services, see http://www.ibm.com/services or see http://www.ibm.com/planetwide for support telephone numbers. In the U.S. and Canada, call 1-800-IBM-SERV (1-800-426-7378).

Hardware service and support

You can receive hardware service through your IBM reseller or IBM Services.

To locate a reseller authorized by IBM to provide warranty service, go to http://www.ibm.com/partnerworld and click **Find Business Partners**. For IBM support telephone numbers, see http://www.ibm.com/planetwide. In the U.S. and Canada, call 1-800-IBM-SERV (1-800-426-7378).

In the U.S. and Canada, hardware service and support is available 24 hours a day, 7 days a week. In the U.K., these services are available Monday through Friday, from 9 a.m. to 6 p.m.

IBM Taiwan product service

Use this information to contact IBM Taiwan product service.

台灣 IBM 產品服務聯絡方式：
台灣國際商業機器股份有限公司
台北市松仁路 7 號 3 樓
電話：0800-016-888

IBM Taiwan product service contact information:

IBM Taiwan Corporation
3F, No 7, Song Ren Rd.
Taipei, Taiwan
Telephone: 0800-016-888

Notices

This information was developed for products and services offered in the U.S.A.

IBM may not offer the products, services, or features discussed in this document in other countries. Consult your local IBM representative for information on the products and services currently available in your area. Any reference to an IBM product, program, or service is not intended to state or imply that only that IBM product, program, or service may be used. Any functionally equivalent product, program, or service that does not infringe any IBM intellectual property right may be used instead. However, it is the user's responsibility to evaluate and verify the operation of any non-IBM product, program, or service.

IBM may have patents or pending patent applications covering subject matter described in this document. The furnishing of this document does not give you any license to these patents. You can send license inquiries, in writing, to:

IBM Director of Licensing
IBM Corporation
North Castle Drive
Armonk, NY 10504-1785
U.S.A.

INTERNATIONAL BUSINESS MACHINES CORPORATION PROVIDES THIS PUBLICATION "AS IS" WITHOUT WARRANTY OF ANY KIND, EITHER EXPRESS OR IMPLIED, INCLUDING, BUT NOT LIMITED TO, THE IMPLIED WARRANTIES OF NON-INFRINGEMENT, MERCHANTABILITY OR FITNESS FOR A PARTICULAR PURPOSE. Some states do not allow disclaimer of express or implied warranties in certain transactions, therefore, this statement may not apply to you.

This information could include technical inaccuracies or typographical errors. Changes are periodically made to the information herein; these changes will be incorporated in new editions of the publication. IBM may make improvements and/or changes in the product(s) and/or the program(s) described in this publication at any time without notice.

Any references in this information to non-IBM websites are provided for convenience only and do not in any manner serve as an endorsement of those websites. The materials at those websites are not part of the materials for this IBM product, and use of those websites is at your own risk.

IBM may use or distribute any of the information you supply in any way it believes appropriate without incurring any obligation to you.

Trademarks

IBM, the IBM logo, and ibm.com are trademarks of International Business Machines Corp., registered in many jurisdictions worldwide. Other product and service names might be trademarks of IBM or other companies.

A current list of IBM trademarks is available on the web at http://www.ibm.com/legal/us/en/copytrade.shtml.

© Copyright IBM Corp. 2013, 2014

Adobe and PostScript are either registered trademarks or trademarks of Adobe Systems Incorporated in the United States and/or other countries.

Cell Broadband Engine is a trademark of Sony Computer Entertainment, Inc., in the United States, other countries, or both and is used under license therefrom.

Intel, Intel Xeon, Itanium, and Pentium are trademarks or registered trademarks of Intel Corporation or its subsidiaries in the United States and other countries.

Java and all Java-based trademarks and logos are trademarks or registered trademarks of Oracle and/or its affiliates.

Linux is a registered trademark of Linus Torvalds in the United States, other countries, or both.

Microsoft, Windows, and Windows NT are trademarks of Microsoft Corporation in the United States, other countries, or both.

UNIX is a registered trademark of The Open Group in the United States and other countries.

Important notes

Processor speed indicates the internal clock speed of the microprocessor; other factors also affect application performance.

CD or DVD drive speed is the variable read rate. Actual speeds vary and are often less than the possible maximum.

When referring to processor storage, real and virtual storage, or channel volume, KB stands for 1024 bytes, MB stands for 1,048,576 bytes, and GB stands for 1,073,741,824 bytes.

When referring to hard disk drive capacity or communications volume, MB stands for 1,000,000 bytes, and GB stands for 1,000,000,000 bytes. Total user-accessible capacity can vary depending on operating environments.

Maximum internal hard disk drive capacities assume the replacement of any standard hard disk drives and population of all hard disk drive bays with the largest currently supported drives that are available from IBM.

Maximum memory might require replacement of the standard memory with an optional memory module.

Each solid-state memory cell has an intrinsic, finite number of write cycles that the cell can incur. Therefore, a solid-state device has a maximum number of write cycles that it can be subjected to, expressed as `total bytes written` (TBW). A device that has exceeded this limit might fail to respond to system-generated commands or might be incapable of being written to. IBM is not responsible for replacement of a device that has exceeded its maximum guaranteed number of program/erase cycles, as documented in the Official Published Specifications for the device.

IBM makes no representation or warranties regarding non-IBM products and services that are ServerProven, including but not limited to the implied warranties of merchantability and fitness for a particular purpose. These products are offered and warranted solely by third parties.

IBM makes no representations or warranties with respect to non-IBM products. Support (if any) for the non-IBM products is provided by the third party, not IBM.

Some software might differ from its retail version (if available) and might not include user manuals or all program functionality.

Particulate contamination

Attention: Airborne particulates (including metal flakes or particles) and reactive gases acting alone or in combination with other environmental factors such as humidity or temperature might pose a risk to the device that is described in this document.

Risks that are posed by the presence of excessive particulate levels or concentrations of harmful gases include damage that might cause the device to malfunction or cease functioning altogether. This specification sets forth limits for particulates and gases that are intended to avoid such damage. The limits must not be viewed or used as definitive limits, because numerous other factors, such as temperature or moisture content of the air, can influence the impact of particulates or environmental corrosives and gaseous contaminant transfer. In the absence of specific limits that are set forth in this document, you must implement practices that maintain particulate and gas levels that are consistent with the protection of human health and safety. If IBM determines that the levels of particulates or gases in your environment have caused damage to the device, IBM may condition provision of repair or replacement of devices or parts on implementation of appropriate remedial measures to mitigate such environmental contamination. Implementation of such remedial measures is a customer responsibility.

Table 17. Limits for particulates and gases

Contaminant	Limits
Particulate	• The room air must be continuously filtered with 40% atmospheric dust spot efficiency (MERV 9) according to ASHRAE Standard 52.2[1]. • Air that enters a data center must be filtered to 99.97% efficiency or greater, using high-efficiency particulate air (HEPA) filters that meet MIL-STD-282. • The deliquescent relative humidity of the particulate contamination must be more than 60%[2]. • The room must be free of conductive contamination such as zinc whiskers.
Gaseous	• Copper: Class G1 as per ANSI/ISA 71.04-1985[3] • Silver: Corrosion rate of less than 300 Å in 30 days

Table 17. Limits for particulates and gases (continued)

Contaminant	Limits
[1] ASHRAE 52.2-2008 - *Method of Testing General Ventilation Air-Cleaning Devices for Removal Efficiency by Particle Size*. Atlanta: American Society of Heating, Refrigerating and Air-Conditioning Engineers, Inc. [2] The deliquescent relative humidity of particulate contamination is the relative humidity at which the dust absorbs enough water to become wet and promote ionic conduction. [3] ANSI/ISA-71.04-1985. *Environmental conditions for process measurement and control systems: Airborne contaminants*. Instrument Society of America, Research Triangle Park, North Carolina, U.S.A.	

Documentation format

The publications for this product are in Adobe Portable Document Format (PDF) and should be compliant with accessibility standards. If you experience difficulties when you use the PDF files and want to request a web-based format or accessible PDF document for a publication, direct your mail to the following address:

Information Development
IBM Corporation
205/A015
3039 E. Cornwallis Road
P.O. Box 12195
Research Triangle Park, North Carolina 27709-2195
U.S.A.

In the request, be sure to include the publication part number and title.

When you send information to IBM, you grant IBM a nonexclusive right to use or distribute the information in any way it believes appropriate without incurring any obligation to you.

Telecommunication regulatory statement

This product may not be certified in your country for connection by any means whatsoever to interfaces of public telecommunications networks. Further certification may be required by law prior to making any such connection. Contact an IBM representative or reseller for any questions.

Electronic emission notices

When you attach a monitor to the equipment, you must use the designated monitor cable and any interference suppression devices that are supplied with the monitor.

Federal Communications Commission (FCC) statement

Note: This equipment has been tested and found to comply with the limits for a Class A digital device, pursuant to Part 15 of the FCC Rules. These limits are designed to provide reasonable protection against harmful interference when the equipment is operated in a commercial environment. This equipment generates, uses, and can radiate radio frequency energy and, if not installed and used in accordance with the instruction manual, may cause harmful interference to radio

communications. Operation of this equipment in a residential area is likely to cause harmful interference, in which case the user will be required to correct the interference at his own expense.

Properly shielded and grounded cables and connectors must be used in order to meet FCC emission limits. IBM is not responsible for any radio or television interference caused by using other than recommended cables and connectors or by unauthorized changes or modifications to this equipment. Unauthorized changes or modifications could void the user's authority to operate the equipment.

This device complies with Part 15 of the FCC Rules. Operation is subject to the following two conditions: (1) this device may not cause harmful interference, and (2) this device must accept any interference received, including interference that might cause undesired operation.

Industry Canada Class A emission compliance statement

This Class A digital apparatus complies with Canadian ICES-003.

Avis de conformité à la réglementation d'Industrie Canada

Cet appareil numérique de la classe A est conforme à la norme NMB-003 du Canada.

Australia and New Zealand Class A statement

Attention: This is a Class A product. In a domestic environment this product may cause radio interference in which case the user may be required to take adequate measures.

European Union EMC Directive conformance statement

This product is in conformity with the protection requirements of EU Council Directive 2004/108/EC on the approximation of the laws of the Member States relating to electromagnetic compatibility. IBM cannot accept responsibility for any failure to satisfy the protection requirements resulting from a nonrecommended modification of the product, including the fitting of non-IBM option cards.

Attention: This is an EN 55022 Class A product. In a domestic environment this product may cause radio interference in which case the user may be required to take adequate measures.

Responsible manufacturer:

International Business Machines Corp.
New Orchard Road
Armonk, New York 10504
914-499-1900

European Community contact:

IBM Deutschland GmbH
Technical Regulations, Department M372
IBM-Allee 1, 71139 Ehningen, Germany
Telephone: +49 7032 15 2941
Email: lugi@de.ibm.com

Germany Class A statement

Deutschsprachiger EU Hinweis: Hinweis für Geräte der Klasse A EU-Richtlinie zur Elektromagnetischen Verträglichkeit

Dieses Produkt entspricht den Schutzanforderungen der EU-Richtlinie 2004/108/EG zur Angleichung der Rechtsvorschriften über die elektromagnetische Verträglichkeit in den EU-Mitgliedsstaaten und hält die Grenzwerte der EN 55022 Klasse A ein.

Um dieses sicherzustellen, sind die Geräte wie in den Handbüchern beschrieben zu installieren und zu betreiben. Des Weiteren dürfen auch nur von der IBM empfohlene Kabel angeschlossen werden. IBM übernimmt keine Verantwortung für die Einhaltung der Schutzanforderungen, wenn das Produkt ohne Zustimmung der IBM verändert bzw. wenn Erweiterungskomponenten von Fremdherstellern ohne Empfehlung der IBM gesteckt/eingebaut werden.

EN 55022 Klasse A Geräte müssen mit folgendem Warnhinweis versehen werden: **Warnung:** Dieses ist eine Einrichtung der Klasse A. Diese Einrichtung kann im Wohnbereich Funk-Störungen verursachen; in diesem Fall kann vom Betreiber verlangt werden, angemessene Maßnahmen zu ergreifen und dafür aufzukommen.

Deutschland: Einhaltung des Gesetzes über die elektromagnetische Verträglichkeit von Geräten

Dieses Produkt entspricht dem Gesetz über die elektromagnetische Verträglichkeit von Geräten (EMVG). Dies ist die Umsetzung der EU-Richtlinie 2004/108/EG in der Bundesrepublik Deutschland.

Zulassungsbescheinigung laut dem Deutschen Gesetz über die elektromagnetische Verträglichkeit von Geräten (EMVG) (bzw. der EMC EG Richtlinie 2004/108/EG) für Geräte der Klasse A

Dieses Gerät ist berechtigt, in Übereinstimmung mit dem Deutschen EMVG das EG-Konformitätszeichen - CE - zu führen.

Verantwortlich für die Einhaltung der EMV Vorschriften ist der Hersteller:

International Business Machines Corp.
New Orchard Road
Armonk, New York 10504
914-499-1900

Der verantwortliche Ansprechpartner des Herstellers in der EU ist:

IBM Deutschland GmbH
Technical Regulations, Abteilung M372
IBM-Allee 1, 71139 Ehningen, Germany
Telephone: +49 7032 15 2941
Email: lugi@de.ibm.com

Generelle Informationen:

Das Gerät erfüllt die Schutzanforderungen nach EN 55024 und EN 55022 Klasse A.

Japan VCCI Class A statement

この装置は、クラス A 情報技術装置です。この装置を家庭環境で使用すると電波妨害を引き起こすことがあります。この場合には使用者が適切な対策を講ずるよう要求されることがあります。 VCCI-A

This is a Class A product based on the standard of the Voluntary Control Council for Interference (VCCI). If this equipment is used in a domestic environment, radio interference may occur, in which case the user may be required to take corrective actions.

Japan Electronics and Information Technology Industries Association (JEITA) statement

高調波ガイドライン準用品

Japan Electronics and Information Technology Industries Association (JEITA) Confirmed Harmonics Guidelines with Modifications (products greater than 20 A per phase)

Korea Communications Commission (KCC) statement

이 기기는 업무용(A급)으로 전자파적합기기로서 판매자 또는 사용자는 이 점을 주의하시기 바라며, 가정외의 지역에서 사용하는 것을 목적으로 합니다.

This is electromagnetic wave compatibility equipment for business (Type A). Sellers and users need to pay attention to it. This is for any areas other than home.

Russia Electromagnetic Interference (EMI) Class A statement

ВНИМАНИЕ! Настоящее изделие относится к классу А.
В жилых помещениях оно может создавать радиопомехи, для снижения которых необходимы дополнительные меры

People's Republic of China Class A electronic emission statement

中华人民共和国“A类”警告声明

声 明

此为A级产品，在生活环境中，该产品可能会造成无线电干扰。在这种情况下，可能需要用户对其干扰采取切实可行的措施。

Taiwan Class A compliance statement

警告使用者:
這是甲類的資訊產品，在
居住的環境中使用時，可
能會造成射頻干擾，在這
種情況下，使用者會被要
求採取某些適當的對策。

Index

A

accessible documentation 644
accessing the IMM2 43
activity LED 10
adapter-retention assembly
  installing 584
  removing 583
adapters and UEFI drivers, Setup utility 25
Advanced Settings Utility (ASU) 31
array, SAS 602
assistance, getting 637
Attention notice, meaning 4
Australia Class A statement 645

B

bezel
  installing 586
  removing 585
boot manager, Setup utility 25
Boot Selection Menu program 30
button, power 10

C

Canada Class A electronic emission statement 645
Cannot communicate with the CMM 544
Cannot communicate with the I/O module 544
Cannot communicate with the management node 543
cannot connect to the data network during initial setup, troubleshooting 545
Cannot log in to the CMM 548
Cannot log in to the I/O module 548
Cannot log in to the management node 547
Cannot log in, troubleshooting 547
Cannot ping the CMM, troubleshooting 548
Cannot ping the I/O module, troubleshooting 551
Cannot ping the management node, troubleshooting 552, 555
Caution notice, meaning 4
chassis bulkhead
  installing 574
  removing 573
chassis management module 6
chassis, support for 1
check log LED 10
China Class A electronic emission statement 647
Class A electronic emission notice 645
CMM cannot ping the CMM 550
CMOS battery 16
CMOS battery *(continued)*
  installing 588
  removing 587
collecting service data 567
commands on USB interface preference, Setup utility 25
components
  compute node , removing and replacing 569
  illustrated 10
  returning 570
  system board 16
compute node
  installing 572
  parts list 53
  removing 571
compute node cover
  installing 577
  removing 575
compute node start problems 543
configuration
  updating 570

configuration summary, viewing 45
configuring
  compute node 23
  LAN over USB manually 49
  RAID array 34
configuring a RAID array 34
connectivity problems 543
connectors, system board 16
console breakout cable 13
consumable and structural parts, removing and replacing 573
contamination, particulate and gaseous 643
controller
  Ethernet 6
  memory 6
  video 6
cover
  installing 577
  removing 575
CRUs, Tier 1, removing and replacing 582
CRUs, Tier 2, removing and replacing 615

D

Danger notice, meaning 4
device drivers, updating 21
device, returning 570
devices and I/O ports, Setup utility 25
diagnostic tools 61
dimensions, IBM Flex System x240 Compute Node Types 7863, 8737, 8738, and 8956 4
DIMM
  installing 591
  removing 590
DIMM *(continued)*
  specifications 4
DIMM connectors 16
disabling LAN over USB interface 49
DMI/SMBIOS data, updating
  locally: keyboard controller style 31
  locally: LAN over USB 32
  remotely over a LAN 33
documentation
  format 644
  using 638
Documentation Browser
  requirements 3
  using 3
documentation CD 3
documentation, related 2
drive
  option, SAS 602
  option, SATA 602
DSA
  editions 67
  portable 67
  preboot 67
  running 67
  text messages 68
  viewing test results 68
DSA diagnostics
  overview 66
DSA log 176
DSA, sending data to IBM 638
Dynamic system analysis diagnostics
  See DSA

E

electrical equipment, servicing vii
electronic emission Class A notice 645
Electronic Service Agent (ESA) 567
error codes 176
  IMM 176
  IMM2 176
  UEFI diagnostic codes 520
error symptoms
  hard disk drive 559
  software 566
errors
  connectivity 543
  memory 561
  observable problems 562
  software 566
Ethernet controller 6
European Union EMC Directive conformance statement 645
event log
  IMM2 64
  viewing without restarting compute node 64
event logs 176

© Copyright IBM Corp. 2013, 2014

F

fabric connector
  installing 598
  location 16
  removing 597
fault LED 10
FCC Class A notice 645
features
  ServerGuide 41
Features on Demand 35
features, compute node 6
filler, node bay 572
finding the UEFI diagnostic code 521
firmware
  recovering from update failure 22
  updating 21
first-failure data capture (FFDA) 567
Force legacy video on boot, Setup utility 25
front handle
  installing 579
  removing 578

G

gaseous contamination 643
Germany Class A statement 646
guidelines
  installation 569
  servicing electrical equipment vii
  system reliability 569
  trained service technicians vi

H

handle, front
  installing 579
  removing 578
hard disk drive
  problems 559
  specifications 6
  support 6
hard disk drive backplane
  installing 600
  removing 599
hard disk drive cage
  installing 581
  removing 580
hard disk drives
  hot swap, installing 602
  specifications 6
  support 6
hardware and software
  requirements 3
hardware service and support telephone numbers 639
HDD backplane connector 16
heat sink
  installing 621
  removing 616
  thermal grease 628
help
  from the World Wide Web 638
  from World Wide Web 638
  sending diagnostic data to IBM 638
  sources of 637
host compute node startup sequence, changing 45
hot-swap hard disk device
  SAS hard disk drive 602
  SATA hard disk drive 602
hot-swap hard disk drive
  installing 602
  removing 601
hot-swap hard disk drive backplane
  installing 600
  removing 599
hot-swap hard disk drive cage
  removing 580

I

I/O expansion adapter
  installing 606
  removing 605
I/O expansion connectors 16
IBM Flex System x240 Compute Node Types 7863, 8737, 8738, and 8956
  dimensions 4
  specifications 4
  weight 4
IBM Taiwan product service 639
identify LED 10
IMM2
  accessing 48
  action descriptions 45
  clearing the system event log 25
  IP addresses, LAN over USB 48
  MAC address and hostname 44
  network access tag 44
  reset to defaults 25
  Setup utility 25
  system event log, viewing through Setup utility 64
  using 43
  viewing from Setup utility 64
  viewing the system event log 25
Important notice, meaning 4
important notices 642
information center 638
inspecting for unsafe conditions vi
installation guidelines 569
installing
  bezel 586
  compute node 572
  hot-swap hard disk drives 602
  optional devices 569
  RFID tag 611
  SAS hard disk drive 602
  SATA hard disk drive 602
installing an optional device 569
integrated management module
  See IMM2
intermittent connectivity problems 561
intermittent problems 560
interposer cable
  installing 604
  removing 603
IP addresses, LAN over USB 48

J

Japan Class A electronic emission statement 647
Japan Electronics and Information Technology Industries Association statement 647
JEITA statement 647
jumpers, system board 17

K

KCS address, IMM2 48
keyboard controller style address, IMM2 48
Korea Class A electronic emission statement 647

L

LAN over USB
  configuring manually 49
  conflicts 49
  disabling interface 49
  IP addresses 48
  Linux driver installation 51
  resolving conflicts 49
  Windows driver installation 50
LEDs
  activity 10
  check log 10
  CMOS battery error 17
  DIMMs 17
  fault 10
  I/O expansion adapter 17
  identify 10
  microprocessor 17
  power 10
  SAS backplane 17
  system board 17
  viewing 61
legacy support, Setup utility 25
legacy Thunk support, Setup utility 25
light path diagnostics 61
light path diagnostics panel 17
  installing 609
  removing 608
light path diagnostics, viewing 61
Linux driver, LAN over USB 51
load-sharing
  power throttling 6
Logic Configuration Utility, LSI 35
LSI Logic Configuration Utility 35

M

MAC address 44
MAC address label 44
major components
  system board 10
memory
  specifications 4
memory mirroring 591
memory module
  installing 591
  removing 590

memory module *(continued)*
specifications 6
memory problems 561
memory, Setup utility 25
messages
IMM 176
UEFI diagnostic codes 520
microprocessor
installing 621
removing 616
specifications 4
thermal grease 628
microprocessor connector 16
microprocessor-retention assembly
installing 630
removing 629
Multiple nodes cannot ping the CMM 549
Multiple nodes cannot ping the I/O module 552
Multiple nodes cannot ping the management node 554, 555, 557, 559
Multiple nodes cannot ping the management node in a different chassis 554, 558
multiple nodes do not power on 565

N

network access tag 44
network configuration, Setup utility 25
network, Setup utility 25
New Zealand Class A statement 645
node bay filler 572
NOS installation
without ServerGuide 42
notes, important 642
notices 641
electronic emission 645
FCC, Class A 645
nx boot failure 29

O

observable problems 562
one compute node experiences a sudden loss of network (Ethernet) connectivity 546
one compute node is unable to connect to the data network during initial setup 545
one or more compute nodes is unable to communicate with SAN 545
operating modes, Setup utility 25
operating system
installing 39, 40
operating system installation
with ServerGuide 41
optional device and replaceable component installation problems 563
optional devices, installing 569

P

particulate contamination 643
parts listing 53
People's Republic of China Class A electronic emission statement 647
performance problems 564
periscope connector
installing 598
removing 597
POST
event viewer 25
POST event log 176
POST watchdog timer, Setup utility 25
power
throttling 6
power button 10
power LED 10
power-on problems 564, 565
compute node does not power off 566
single node does not power on 564
power, Setup utility 25
problems 545
compute node start 543
connectivity 543
hard disk drive 559
intermittent 560
intermittent connectivity 561
memory 561
multiple nodes do not power on 565
observable problems 562
optional device and replaceable component installation 563
performance 564
power-on 564, 565
compute node does not power off 566
single node does not power on 564
software 566
undetermined 566
processors, Setup utility 25
product service, IBM Taiwan 639
publications CD 3
publications, related 2
PXE Boot Agent 45
PXE boot protocol, setting 30

R

reboot system on NMI, Setup utility 25
redundant array of independent disks (RAID)
SAS array 602
rehook INT, Setup utility 25
related documentation 2
reliability
features 8
RAS features 8
removing
bezel 585
compute node 571
front handle 578
hot-swap hard disk drive 601
RFID tag 609
removing and replacing compute node components 569
removing and replacing consumable and structural parts 573
removing and replacing CRUs 582, 615
replacing
thermal grease 628
requirements
hardware 3
hardware and software 3
software 3
returning a device or component 570
RFID tag 1
installing 611
removing 609
Russia Class A electronic emission statement 647

S

safety v
safety statements v, viii
SAS array, type supported 602
SAS hard disk drive
hot-swap hard disk device 602
installing 602
SAS ID address 44
SATA hard disk drive
hot-swap hard disk device 602
installing 602
SCSI 602
sending diagnostic data to IBM 638
Serial Attached SCSI (SAS)
hot-swap hard disk drive
installing 602
removing 601
ServerGuide
features 41
using to install operating system 41
ServerGuide CD 6
service and support
before you call 637
hardware 639
software 639
Service and Support Manager 567
service bulletins 61
servicing electrical equipment vii
setting the PXE boot protocol 30
setting up the LAN-on-motherboard (LOM) feature 36
Setup utility 42
menu 25
overview 25
Single node cannot ping the CMM 548
Single node cannot ping the I/O module 551
Single node cannot ping the management node 552, 555
Single node cannot ping the management node, different chassis 553, 556
SMBIOS data, updating
locally: keyboard controller style 31
locally: LAN over USB 32
remotely over a LAN 33
software problems 566
software service and support telephone numbers 639

specifications
IBM Flex System x240 Compute Node Types 7863, 8737, 8738, and 8956 4
start options, Setup utility 25
starting the compute node 14
startup sequence, changing 45
static electricity 570
static-sensitive devices, handling 570
stopping the compute node 15
storage drive
problems 559
switches, system board 18
system board
connectors 16
jumpers 17
layouts 16
LEDs 17
switches 18
system event log 176
system event logs, Setup utility 25
system information, Setup utility 25
system reliability guidelines 569
system security, Setup utility 25
system settings, Setup utility 25
system summary, Setup utility 25
system-board assembly
components 10
installing 633
removing 632
systems management
chassis management module 6
IBM Flex System Manager management software 6

T

Taiwan Class A electronic emission statement 648
telecommunication regulatory statement 644
telephone numbers 639
thermal grease, replacing 628
Tier 1 CRU 569
Tier 1 CRUs, removing and replacing 582
Tier 2 CRU 569
Tier 2 CRUs, removing and replacing 615
TPM
Setup utility 25
trademarks 641
trained service technicians, guidelines vi
troubleshooting 61
service bulletins 61
troubleshooting tables 543
Troubleshooting, cannot communicate with the CMM 544
Troubleshooting, cannot communicate with the I/O module 544
Troubleshooting, cannot communicate with the management node 543
troubleshooting, cannot connect to the data network during initial setup 545
Troubleshooting, cannot log in 547
Troubleshooting, cannot log in to the CMM 548
Troubleshooting, cannot log in to the I/O module 548
Troubleshooting, cannot log in to the management node 547
Troubleshooting, cannot ping the CMM 548
Troubleshooting, cannot ping the I/O module 551
Troubleshooting, cannot ping the management node 552, 555
Troubleshooting, CMM cannot ping the CMM 550
Troubleshooting, multiple nodes cannot ping the CMM 549
Troubleshooting, multiple nodes cannot ping the I/O module 552
Troubleshooting, multiple nodes cannot ping the management node 554, 555, 557, 559
Troubleshooting, multiple nodes cannot ping the management node in a different chassis 554, 558
troubleshooting, one compute node experiences a sudden loss of network (Ethernet) connectivity 546
troubleshooting, one compute node is unable to connect to the data network during initial setup 545
troubleshooting, one or more compute nodes is unable to communicate with SAN 545
Troubleshooting, single node cannot ping the CMM 548
Troubleshooting, single node cannot ping the I/O module 551
Troubleshooting, single node cannot ping the management node 552, 555
Troubleshooting, single node cannot ping the management node, different chassis 553, 556
troubleshooting, two or more compute nodes are unable to connect to the data network during initial setup 546
troubleshooting, two or more compute nodes experience a sudden loss of network (Ethernet) connectivity 547
trusted platform module, Setup utility 25
turning off the compute node 15
turning on the compute node 14
two or more compute nodes are unable to connect to the data network during initial setup 546
two or more compute nodes experience a sudden loss of network (Ethernet) connectivity 547

U

UEFI diagnostic codes 520
UEFI drivers, Setup utility 25
UEFI firmware
recovering from update failure 22
updating 21
updating using IBM Flex System Manager Chassis Manager 21
UEFI firmware *(continued)*
updating using IBM ToolsCenter Bootable Media Creator 21
updating using UpdateXpress 21
unable to communicate 543
undetermined problems 566
United States FCC Class A notice 645
unsafe conditions, inspecting for vi
updating
configuration 570
device drivers 21
firmware 21
USB enablement kit
installing 612
removing 611
USB flash drive
installing 614
removing 614
user security, Setup utility 25

V

viewing DSA test results 68
Virtual Light Path 45

W

web interface
logging on to 44
weight, IBM Flex System x240 Compute Node Types 7863, 8737, 8738, and 8956 4
Windows driver, LAN over USB 50

Part Number: 00FH226

Printed in USA

(1P) P/N: 00FH226