QFX3000-G QFabric System Hardware Documentation

Modified: 2018-09-22

Copyright © 2018, Juniper Networks, Inc.

Juniper Networks, Inc.
1133 Innovation Way
Sunnyvale, California 94089
USA
408-745-2000
www.juniper.net

Juniper Networks, the Juniper Networks logo, Juniper, and Junos are registered trademarks of Juniper Networks, Inc. and/or its affiliates in the United States and other countries. All other trademarks may be property of their respective owners.

Juniper Networks assumes no responsibility for any inaccuracies in this document. Juniper Networks reserves the right to change, modify, transfer, or otherwise revise this publication without notice.

QFX3000-G QFabric System Hardware Documentation
Copyright © 2018 Juniper Networks, Inc. All rights reserved.

The information in this document is current as of the date on the title page.

YEAR 2000 NOTICE

Juniper Networks hardware and software products are Year 2000 compliant. Junos OS has no known time-related limitations through the year 2038. However, the NTP application is known to have some difficulty in the year 2036.

END USER LICENSE AGREEMENT

The Juniper Networks product that is the subject of this technical documentation consists of (or is intended for use with) Juniper Networks software. Use of such software is subject to the terms and conditions of the End User License Agreement ("EULA") posted at https://www.juniper.net/support/eula/. By downloading, installing or using such software, you agree to the terms and conditions of that EULA.

Table of Contents

About the Documentation . . . xlv
Documentation and Release Notes . . . xlv
Documentation Conventions . . . xlv
Documentation Feedback . . . xlvii
Requesting Technical Support . . . xlviii
Self-Help Online Tools and Resources . . . xlviii
Opening a Case with JTAC . . . xlix

Part 1 Overview

Chapter 1 **QFX3000-G QFabric System Overview . . . 3**

QFabric System Overview . . . 3
Legacy Data Center Architecture . . . 3
QFX Series QFabric System Architecture . . . 5
Understanding the QFabric System Hardware Architecture . . . 7
QFabric System Hardware Architecture Overview . . . 7
QFX3000-G QFabric System Features . . . 9
QFX3000-M QFabric System Features . . . 10
Understanding QFX3000-G QFabric System Hardware Configurations . . . 10
Understanding the Director Group . . . 12
Director Group Components . . . 12
Director Group Services . . . 12
Understanding Routing Engines in the QFabric System . . . 13
Hardware-Based Routing Engines . . . 13
Software-Based External Routing Engines . . . 13
Understanding Interconnect Devices . . . 14
Interconnect Device Introduction . . . 14
QFX3008-I Interconnect Devices . . . 15
QFX3600-I Interconnect Devices . . . 16
QFX5100-24Q Interconnect Devices . . . 17
Understanding Node Devices . . . 18
Node Device Introduction . . . 18
QFX3500 Node Devices . . . 18
QFX3600 Node Devices . . . 19
QFX5100 Node Devices . . . 20
Understanding Node Groups . . . 22
Network Node Groups . . . 22
Server Node Groups . . . 22

Chapter 2 QFX3100 Overview 25

QFX3100 Director Device Overview 25
Software 26
Physical Specifications 26
Network Modules 26
Hard Disk Drive Modules 27
AC Power Supplies 27
Fan Modules 27
Field-Replaceable Units in a QFX3100 Director Device 27
Understanding Redundancy of QFX3100 Director Device Components and Functionality 28
QFX3100 Director Device Redundancy 28
QFX3100 Director Device Component Redundancy 29
Chassis Physical Specifications for a QFX3100 Director Device 29
Front Panel of a QFX3100 Director Device 30
Rear Panel of a QFX3100 Director Device 30
Cooling System and Airflow in a QFX3100 Director Device 31
Network Modules in a QFX3100 Director Device 32
HDD Modules in a QFX3100 Director Device 33
Fan Modules in a QFX3100 Director Device 33
AC Power Supply in a QFX3100 Director Device 34

Chapter 3 QFX3008-I Overview 37

QFX3008-I Interconnect Device Overview 37
Software 38
Chassis Physical Specifications, Front Panel Display, and Midplane 38
16-Port QSFP+ Front Card 40
Control Board 41
Rear Card 41
Cooling System 41
Power Supplies and Wiring Trays 41
Field-Replaceable Units in a QFX3008-I Interconnect Device 42
Understanding Redundancy of QFX3008-I Interconnect Device Components and Functionality 43
Slot Numbering for a QFX3008-I Interconnect Device 44
Chassis Physical Specifications for a QFX3008-I Interconnect Device 45
Midplane in a QFX3008-I Interconnect Device 46
Front Panel Display of the QFX3008-I Interconnect Device 47
Cooling System and Airflow in a QFX3008-I Interconnect Device 48
16-Port QSFP+ Front Cards in a QFX3008-I Interconnect Device 52
Control Board in a QFX3008-I Interconnect Device 53
Rear Cards in a QFX3008-I Interconnect Device 55
AC Power Supply in a QFX3008-I Interconnect Device 56
Wiring Tray in a QFX3008-I Interconnect Device 58
Grounding Cable and Lug Specifications for a QFX3008-I Interconnect Device 61

 Copyright © 2018, Juniper Networks, Inc.

Chapter 4 QFX5100 Overview 63
QFX5100 Device Hardware Overview 63
QFX5100 Hardware 63
System Software 72
QFX5100 Device Models 72
Field-Replaceable Units in a QFX5100 Device 75
Understanding Hardware Redundancy of QFX5100 Device Components and Functionality 75
Chassis Physical Specifications for a QFX5100 Device 76
Port Panel of QFX5100-48S and QFX5100-48SH Devices 77
Port Panel of QFX5100-48T and QFX5100-48TH Devices 79
Port Panel of a QFX5100-24Q Device 81
Switch Ports 81
QFabric Systems 82
Channelizing Interfaces (Non-QFabric) 82
Virtual Chassis and Virtual Chassis Fabric 83
Port LEDs 83
Management Panel of a QFX5100 Device 85
Cooling System and Airflow in a QFX5100 Device 88
Fan Modules 88
Do Not Install Components with Different Airflow or Wattage in the Switch 92
Fan Module Status 93
AC Power Supply for a QFX5100 Device 94
DC Power Supply in a QFX5100 Device 96
Chapter 5 QFX3600 Overview 99
QFX3600 Device Overview 99
Software 100
Hardware 100
Field-Replaceable Units for QFX3600 and QFX3600-I Devices 102
Understanding Redundancy of QFX3600 and QFX3600-I Components and Functionality 103
Chassis Physical Specifications for QFX3600 and QFX3600-I Devices 103
Front Panel of a QFX3600 Device 104
Rear Panel of QFX3600 and QFX3600-I Devices 106
Cooling System and Airflow for QFX3600 and QFX3600-I Devices 107
AC Power Supply for a QFX3500, QFX3600, or QFX3600-I Device 110
DC Power Supply for a QFX3500, QFX3600, or QFX3600-I Device 112

Copyright © 2018, Juniper Networks, Inc.

Chapter 6 QFX3500 Overview . . . 115
QFX3500 Device Overview . . . 115
Software . . . 116
Hardware . . . 116
SFP+ Access Ports . . . 117
QSFP+ Uplink Ports . . . 118
Field-Replaceable Units in a QFX3500 Device . . . 119
Understanding Redundancy of QFX3500 Device Components and Functionality . . . 120
Chassis Physical Specifications for a QFX3500 Chassis . . . 121
Front Panel of a QFX3500 Device . . . 122
Rear Panel of a QFX3500 Device . . . 123
Cooling System and Airflow for a QFX3500 Device . . . 124
Management Board for a QFX3500 Device . . . 128
AC Power Supply for a QFX3500, QFX3600, or QFX3600-I Device . . . 130
DC Power Supply for a QFX3500, QFX3600, or QFX3600-I Device . . . 132
Grounding Cable and Lug Specifications for a QFX3500 Device . . . 134

Chapter 7 EX4300 Overview . . . 137
EX4300 Switches Hardware Overview . . . 137
Software . . . 138
EX4300 Switches First View . . . 138
24-Port EX4300 Switches . . . 138
32-Port EX4300 Switches . . . 140
48-Port EX4300 Switches . . . 141
Uplink Modules . . . 145
Virtual Chassis . . . 147
Power Supplies . . . 148
Fan Modules . . . 149
EX4300 Switch Components . . . 150
Field-Replaceable Units in EX4300 Switches . . . 153
Chassis Physical Specifications for EX4300 Switches . . . 155
Cooling System and Airflow in an EX4300 Switch . . . 156
Fan Modules . . . 156
Airflow Direction in EX4300 Switch Models . . . 157
Front-to-Back Airflow . . . 158
Back-to-Front Airflow . . . 160
Do Not Mix AIR IN (AFI) and AIR OUT (AFO) Components in the Switch . . . 161
Positioning the Switch . . . 161
Fan Module Status . . . 161
AC Power Supply in EX4300 Switches . . . 162
Characteristics of an AC Power Supply . . . 163
AC Power Supply Airflow . . . 165
N+0 Redundancy Configuration of AC Power Supplies . . . 165
N+N Redundancy Configuration of AC Power Supplies . . . 168
DC Power Supply in EX4300 Switches . . . 170
Characteristics of a DC Power Supply . . . 171
DC Power Supply Airflow . . . 172
N+0 Redundancy Configuration of DC Power Supplies . . . 173

 Copyright © 2018, Juniper Networks, Inc.

N+N Redundancy Configuration of DC Power Supplies 174
Connecting Earth Ground to an EX Series Switch 175
Parts and Tools Required for Connecting an EX Series Switch to Earth Ground 176
Special Instructions to Follow Before Connecting Earth Ground to a Switch 180
Connecting Earth Ground to an EX Series Switch 182

Chapter 8 **EX4200 Overview 183**

EX4200 Switches Hardware Overview 183
EX4200 Switches 183
Uplink Modules 184
Power over Ethernet Ports 184
Field-Replaceable Units in EX4200 Switches 185
Chassis Physical Specifications for EX4200 Switches 186
Cooling System and Airflow in an EX4200 Switch 187
Fan Tray 187
Airflow Direction in the EX4200 Switch Chassis 187
Power Supply in EX4200 Switches 188
AC Power Supplies 189
DC Power Supplies 190
PoE Power Budget and AC Power Supplies 191
Connecting Earth Ground to an EX Series Switch 193
Parts and Tools Required for Connecting an EX Series Switch to Earth Ground 193
Special Instructions to Follow Before Connecting Earth Ground to a Switch 197
Connecting Earth Ground to an EX Series Switch 199

Part 2 **Planning**

Chapter 9 **Site Preparation 203**

Planning a QFX3000-G QFabric System Deployment 204
Site Preparation Checklist for a QFX3100 Director Device 208
Site Preparation Checklist for a QFX3008-I Interconnect Device 210
Site Preparation Checklist for a QFX5100 Device 211
Site Preparation Checklist for a QFX3600 or QFX3600-I Device 212
Site Preparation Checklist for a QFX3500 Device 213
Site Preparation Checklist for EX4300 Switches 215
Site Preparation Checklist for EX4200 Switches 216
General Site Guidelines 217
Site Electrical Wiring Guidelines 218
Environmental Requirements and Specifications for a QFX3100 Director Device 218
Environmental Requirements and Specifications for a QFX3008-I Interconnect Device 219
Environmental Requirements and Specifications for QFX3600 and QFX3600-I Devices 220
Environmental Requirements and Specifications for a QFX3500 Device 221
Environmental Requirements and Specifications for a QFX5100 Device 222

Copyright © 2018, Juniper Networks, Inc.

Environmental Requirements and Specifications for EX Series Switches 223

Chapter 10 **Rack and Cabinet Requirements 229**

Rack Requirements for a QFX3100 Director Device 230
Rack Requirements for a QFX3008-I Interconnect Device 231
Rack Requirements for a QFX5100 Device 232
Rack Requirements for a QFX3600 or QFX3600-I Device 233
Rack Requirements for a QFX3500 Device 235
Rack Requirements for EX4300 Switches 236
Rack Requirements for EX4200 Switches 237
Cabinet Requirements for a QFX3100 Director Device 238
Cabinet Requirements for a QFX3008-I Interconnect Device 239
Cabinet Requirements for a QFX5100 Device 240
Cabinet Requirements for a QFX3600 or QFX3600-I Device 241
Cabinet Requirements for a QFX3500 Device 242
Cabinet Requirements for EX4300 Switches 243
Cabinet Requirements for EX4200 Switches 244
Clearance Requirements for Airflow and Hardware Maintenance for a QFX3100 Director Device 245
Clearance Requirements for Airflow and Hardware Maintenance for a QFX3008-I Interconnect Device 246
Clearance Requirements for Airflow and Hardware Maintenance for a QFX5100 Device 248
Clearance Requirements for Airflow and Hardware Maintenance for a QFX3600 or QFX3600-I Device 249
Clearance Requirements for Airflow and Hardware Maintenance for a QFX3500 Device 250
Clearance Requirements for Airflow and Hardware Maintenance for EX4300 Switches 251
Clearance Requirements for Airflow and Hardware Maintenance for EX4200 Switches 254

Chapter 11 **Port and Interface Specifications 257**

USB Port Specifications for the QFX Series 257
USB Port Specifications for an EX Series Switch 258
Determining Transceiver Support for QFabric Systems 258
Console Port Connector Pinout Information 259
Management Port Connector Pinouts for the QFX Series 260
RJ-45 Management Port Connector Pinout Information 261
Management Port Connector Pinout Information for an EX4200 Switch 261
Network Module Port Connector Pinouts for a QFX3100 Director Device 262

Chapter 12 **Cable Specifications 265**

Cable Specifications for Copper-Based Control Plane Connections for the QFabric System 265
Cable Specifications for QSFP+ and QSFP28 Transceivers 266

 Copyright © 2018, Juniper Networks, Inc.

Cable Specifications for Console and Management Connections for the QFX Series . . . 268
Understanding QFX Series Fiber-Optic Cable Signal Loss, Attenuation, and Dispersion . . . 269
Signal Loss in Multimode and Single-Mode Fiber-Optic Cables . . . 269
Attenuation and Dispersion in Fiber-Optic Cable . . . 269
Understanding EX Series Switches Fiber-Optic Cable Signal Loss, Attenuation, and Dispersion . . . 270
Signal Loss in Multimode and Single-Mode Fiber-Optic Cable . . . 270
Attenuation and Dispersion in Fiber-Optic Cable . . . 271
Calculating the Fiber-Optic Cable Power Budget for a QFX Series Device . . . 271
Calculating the Fiber-Optic Cable Power Margin for a QFX Series Device . . . 272
Calculating the EX Series Switch Fiber-Optic Cable Power Budget . . . 274
Calculating the EX Series Switch Fiber-Optic Cable Power Margin . . . 274

Chapter 13 Planning QFX3100 Power Requirements . . . 277

AC Power Specifications for a QFX3100 Director Device . . . 277
AC Power Cord Specifications for a QFX3100 Director Device . . . 277

Chapter 14 Planning QFX3008-I Power Requirements . . . 281

AC Power Specifications for a QFX3008-I Interconnect Device with Single-Phase Wiring Trays . . . 281
AC Power Specifications for a QFX3008-I Interconnect Device with Three-Phase Delta Wiring Trays . . . 282
AC Power Specifications for a QFX3008-I Interconnect Device with Three-Phase Wye Wiring Trays . . . 282
Power Requirements for a QFX3008-I Interconnect Device . . . 283
AC Power Cord Specifications for a QFX3008-I Interconnect Device with Single-Phase Wiring Trays . . . 283
AC Power Cord Specifications for a QFX3008-I Interconnect Device with Three-Phase Delta Wiring Trays . . . 285
AC Power Cord Specifications for a QFX3008-I Interconnect Device with Three-Phase Wye Wiring Trays . . . 286
Calculating Power Requirements for a QFX3008-I Interconnect Device . . . 288
Power Consumption of Different QFX3008-I Interconnect Device Configurations . . . 289
System Thermal Output for Different QFX3008-I Interconnect Device Configurations . . . 289

Chapter 15 Planning QFX5100 Power Requirements . . . 291

AC Power Specifications for a QFX5100 Device . . . 291
AC Power Cord Specifications for a QFX Series Device . . . 292
DC Power Specifications for a QFX5100 Device . . . 293

Chapter 16 Planning QFX3600 Power Requirements . . . 295

AC Power Specifications for a QFX3600 or QFX3600-I Device . . . 295
AC Power Cord Specifications for a QFX Series Device . . . 295
DC Power Specifications for a QFX3600 or QFX3600-I Device . . . 297

Copyright © 2018, Juniper Networks, Inc.

Chapter 17 Planning QFX3500 Power Requirements 299
AC Power Specifications for a QFX3500 Device 299
AC Power Cord Specifications for a QFX Series Device 299
DC Power Specifications for a QFX3500 Device 301
Chapter 18 Planning EX4300 Power Requirements 303
AC Power Supply Specifications for EX4300 Switches 303
AC Power Cord Specifications for an EX4300 Switch 305
DC Power Supply Specifications for EX4300 Switches 309
Chapter 19 Planning EX4200 Power Requirements 311
Power Specifications for EX4200 Switches 311
AC Power Cord Specifications for EX4200 Switches 312
Chapter 20 Compliance 315
Agency Approvals for the QFX Series 315
Agency Approvals for EX Series Switches 316
Compliance Statements for EMC Requirements for the QFX Series 317
Canada 317
European Community 318
Israel 318
Japan 318
Korea 319
Tawain 319
United States 319
Nonregulatory Environmental Standards 319
Compliance Statements for EMC Requirements for EX Series Switches 320
Canada 321
Taiwan 321
European Community 322
Israel 322
Japan 322
Korea 322
United States 323
FCC Part 15 Statement 323
Nonregulatory Environmental Standards 323
Compliance Statements for Acoustic Noise for EX Series Switches 324
Statements of Volatility for Juniper Network Devices 324
Part 3 Safety
Chapter 21 General Safety Guidelines and Warnings 329
General Safety Guidelines and Warnings 329
Definitions of Safety Warning Levels 330
Qualified Personnel Warning 332
Warning Statement for Norway and Sweden 333

 Copyright © 2018, Juniper Networks, Inc.

Chapter 22 Fire Safety Requirements 335
Fire Safety Requirements 335
Fire Suppression 335
Fire Suppression Equipment 335
Chapter 23 Installation and Maintenance Safety Information 337
Installation Instructions Warning 337
Chassis Lifting Guidelines for a QFX3100 Director Device 338
Chassis Lifting Guidelines for a QFX3008-I Interconnect Device 338
Chassis Lifting Guidelines for a QFX5100 Device 339
Chassis Lifting Guidelines for a QFX3600 or QFX3600-I Device 340
Chassis Lifting Guidelines for a QFX3500 Device 340
Chassis Lifting Guidelines for EX4300 Switches 341
Chassis Lifting Guidelines for EX4200 Switches 341
Restricted Access Warning 342
Ramp Warning 343
Rack-Mounting and Cabinet-Mounting Warnings 343
Grounded Equipment Warning 347
Chapter 24 Radiation and Laser Warnings 349
Radiation from Open Port Apertures Warning 349
Laser and LED Safety Guidelines and Warnings for the QFX Series 350
Class 1M Laser Product Warning 350
Class 1M Laser Radiation Warning 351
Unterminated Fiber-Optic Cable Warning 351
Chapter 25 Maintenance and Operational Safety Warnings 353
Maintenance and Operational Safety Guidelines and Warnings 353
Battery Handling Warning 353
Jewelry Removal Warning 354
Lightning Activity Warning 355
Operating Temperature Warning 356
Product Disposal Warning 357
Chapter 26 Power and Electrical Safety Information 359
General Electrical Safety Guidelines and Warnings 359
Prevention of Electrostatic Discharge Damage 360
Action to Take After an Electrical Accident 362
AC Power Electrical Safety Guidelines 362
AC Power Disconnection Warning 363
DC Power Electrical Safety Guidelines 364
DC Power Disconnection Warning 364
DC Power Grounding Requirements and Warning 366
DC Power Wiring Sequence Warning 367
DC Power Wiring Terminations Warning 368
Multiple Power Supplies Disconnection Warning 369
TN Power Warning 370

Copyright © 2018, Juniper Networks, Inc.

Part 4 Installation

Chapter 27 Before You Begin . . . 373

QFX3000-G QFabric System Installation Overview . . . 373

Chapter 28 Installing a QFX3100 Director Device . . . 377

Installing and Connecting a QFX3100 Director Device . . . 377
Unpacking a QFX3100 Director Device . . . 378
Mounting a QFX3100 Director Device on Two Posts in a Rack or Cabinet . . . 380
Mounting a QFX3100 Director Device on Four Posts in a Rack or Cabinet . . . 381
Connecting AC Power to a QFX3100 Director Device . . . 383
Powering On a QFX3100 Director Device . . . 385
Connecting a QFX Series Device to a Management Console . . . 386

Chapter 29 Installing a QFX3008-I Interconnect Device . . . 389

Installing and Connecting a QFX3008-I Interconnect Device . . . 389
Unpacking a QFX3008-I Interconnect Device . . . 390
Parts Inventory (Packing List) for a QFX3008-I Interconnect Device . . . 391
Installing QFX3008-I Interconnect Device Mounting Hardware on Four-Post Racks or Cabinets . . . 394
Installing Four-Post Mounting Shelf and Rear Support Bracket for QFX3008-I Interconnect Device Four-Post Rack or Cabinet Mounting . . . 394
Installing Cage Nuts for the Four-Post Mounting Shelf and Support Bracket for QFX3008-I Interconnect Device Four-Post Rack or Cabinet Mounting . . . 396
Installing the Rear Support Bracket for QFX3008-I Interconnect Device Four-Post Rack or Cabinet Mounting . . . 396
Installing the Four-Post Mounting Shelf for QFX3008-I Interconnect Device Four-Post Rack or Cabinet Mounting . . . 396
Installing Spacer Bars and Shelves for QFX3008-I Interconnect Device Four-Post Rack or Cabinet Mounting . . . 397
Installing Cage Nuts for QFX3008-I Interconnect Device Four-Post Rack or Cabinet Mounting . . . 399
Installing the Small Mounting Shelf for QFX3008-I Interconnect Device Four-Post Rack or Cabinet Mounting . . . 399
Installing the Large Mounting Shelf and Spacer Bars for QFX3008-I Interconnect Device Four-Post Rack or Cabinet Mounting . . . 400
Removing the Adjustable Center-Mounting Brackets for QFX3008-I Interconnect Device Four-Post Rack or Cabinet Mounting . . . 401
Installing QFX3008-I Interconnect Device Mounting Hardware on Two-Post Racks . . . 401
Installing Cage Nuts for QFX3008-I Interconnect Device Two-Post Rack Mounting . . . 403
Installing the Small Mounting Shelf for QFX3008-I Interconnect Device Two-Post Rack Mounting . . . 403
Installing the Large Mounting Shelf for QFX3008-I Interconnect Device Two-Post Rack Mounting . . . 404
Mounting a QFX3008-I Interconnect Device on a Rack or Cabinet Using a Mechanical Lift . . . 405
Connecting Earth Ground to a QFX3008-I Interconnect Device . . . 409

Copyright © 2018, Juniper Networks, Inc.

Connecting AC Power to a QFX3008-I Interconnect Device with Single-Phase Wiring Trays . . . 411
Preparing Delta and Wye Three-Phase Power Cords . . . 413
Connecting AC Power to a QFX3008-I Interconnect Device with Three-Phase Delta Wiring Trays . . . 418
Connecting AC Power to a QFX3008-I Interconnect Device with Three-Phase Wye Wiring Trays . . . 422
Powering On a QFX3008-I Interconnect Device . . . 425
Connecting a QFX Series Device to a Management Console . . . 426

Chapter 30 Installing QFX3008-I Optional Components . . . 429

Installing the Cable Management System on a QFX3008-I Interconnect Device . . . 429
Installing the Lockable Front Doors on a QFX3008-I Interconnect Device . . . 430

Chapter 31 Installing a QFX5100 Node Device . . . 433

Installing and Connecting a QFX5100 Device . . . 433
Unpacking a QFX5100 Device . . . 434
Mounting a QFX5100 Device in a Rack or Cabinet . . . 435
Before You Begin Rack Installation . . . 436
Four-Post Procedure . . . 437
Two -Post Procedure . . . 440
Connecting Earth Ground to a QFX5100 Device . . . 442
Connecting AC Power to a QFX5100 Device . . . 443
Connecting DC Power to a QFX5100 Device . . . 446
Connecting a QFX Series Device to a Management Console . . . 450

Chapter 32 Installing a QFX3600 Node Device . . . 453

Installing and Connecting a QFX3600 or QFX3600-I Device . . . 453
Unpacking a QFX3600 or QFX3600-I Device . . . 454
Mounting a QFX3600 or QFX3600-I Device on Two Posts in a Rack or Cabinet . . . 455
Mounting a QFX3600 or QFX3600-I Device on Four Posts in a Rack or Cabinet . . . 458
Connecting Earth Ground to QFX3600 or QFX3600-I Devices . . . 462
Connecting AC Power to a QFX3500, QFX3600, or QFX3600-I Device . . . 463
Connecting DC Power to a QFX3500, QFX3600, or QFX3600-I Device . . . 466
Connecting a QFX Series Device to a Management Console . . . 470

Chapter 33 Installing a QFX3500 Node Device . . . 473

Installing and Connecting a QFX3500 Device . . . 473
Unpacking a QFX3500 Device . . . 474
Mounting a QFX3500 Device in a Rack or Cabinet . . . 475
Before You Begin Rack Installation . . . 475
Two Mounting Rails Procedure . . . 476
Four Mounting Rails Procedure . . . 478
Connecting Earth Ground to a QFX3500 Device . . . 480
Connecting AC Power to a QFX3500, QFX3600, or QFX3600-I Device . . . 481
Connecting DC Power to a QFX3500, QFX3600, or QFX3600-I Device . . . 484
Connecting a QFX Series Device to a Management Console . . . 488

Copyright © 2018, Juniper Networks, Inc.

Chapter 34 Installing the Control Plane Network 491
Installing and Connecting an EX4200 Switch 491
Installing and Connecting an EX4300 Switch 492
Cabling EX4200 or EX4300 Series Switches Virtual Chassis for a QFX3000-G QFabric System Control Plane 493
Chapter 35 Cabling a Copper-Based Control Plane for the QFX3000-G QFabric System 497
Interconnecting Two Virtual Chassis for Copper-Based QFX3000-G QFabric System Control Plane Redundancy 497
Connecting QFX3100 Director Devices in a Director Group 500
Connecting QFX3100 Director Devices to a Copper-Based QFX3000-G QFabric System Control Plane Network 502
Connecting a QFX3100 Director Device to a Network for Out-of-Band Management 505
Connecting a QFX3008-I Interconnect Device to a Copper-Based QFX3000-G QFabric System Control Plane Network 505
Connecting a QFX5100 Node Device to a Copper-Based QFX3000-G QFabric System Control Plane Network 510
Connecting a QFX3600 Node Device to a Copper-Based QFX3000-G QFabric System Control Plane Network 512
Connecting a QFX3500 Node Device to a Copper-Based QFX3000-G QFabric System Control Plane Network 515
Chapter 36 Cabling a Fiber-Based Control Plane for the QFX3000-G QFabric System 519
Interconnecting Two Virtual Chassis for Fiber-Based QFX3000-G QFabric System Control Plane Redundancy 519
Connecting QFX3100 Director Devices in a Director Group 522
Connecting QFX3100 Director Devices to a Fiber-Based QFX3000-G QFabric System Control Plane Network 524
Connecting a QFX3100 Director Device to a Network for Out-of-Band Management 527
Connecting a QFX3008-I Interconnect Device to a Fiber-Based QFX3000-G QFabric System Control Plane Network 528
Connecting a QFX5100 Node Device to a Fiber-Based QFX3000-G QFabric System Control Plane Network 533
Connecting a QFX3600 Node Device to a Fiber-Based QFX3000-G QFabric System Control Plane Network 537
Connecting a QFX3500 Node Device to a Fiber-Based QFX3000-G QFabric System Control Plane Network 540
Chapter 37 Cabling the Data Plane for the QFX3000-G QFabric System 545
Connecting a QFX5100 Node Device to a QFX3008-I Interconnect Device 545
Connecting a QFX3600 Node Device to a QFX3008-I Interconnect Device 547
Connecting a QFX3500 Node Device to a QFX3008-I Interconnect Device . . . 548

 Copyright © 2018, Juniper Networks, Inc.

Chapter 38 Performing the Initial Configuration 551

Performing the QFabric System Initial Setup on a QFX3100 Director Group 551
Performing an Initial Setup 552
Restoring a Backup Configuration 555

Part 5 Maintenance

Chapter 39 Removing or Replacing a Device 559

Powering Off a QFX3100 Director Device 559
Powering Off an Existing QFabric Node Device 560
Powering Off a QFX3008-I Interconnect Device 562
Adding or Replacing a QFX3100 Director Device in a QFabric System 565
Powering Off and Removing the Old QFX3100 Director Device 566
Update the New QFX3100 Director Device Software 566
Adding the New QFX3100 Director Device to the QFabric System 567
Removing a QFX3100 Director Device from a Rack or Cabinet 570
Adding or Replacing a QFX3008-I Interconnect Device in a QFX3000-G QFabric System 571
Before You Begin 571
Powering Off a QFX3008-I Interconnect Device 571
Adding a New QFX3008-I Interconnect Device to the QFabric System 574
Removing a QFX3008-I Interconnect Device from a Rack or Cabinet 576
Adding or Replacing a Node Device in a QFabric Node Group 578
Before You Begin 578
Powering Off an Existing QFabric Node Device 579
Adding a New Node Device to a Node Group in a QFabric System 581
Removing a QFX5100 Device from a Rack or Cabinet 583
Removing a QFX3600 or QFX3600-I Device from a Rack or Cabinet 584
Removing a QFX3500 Device from a Rack or Cabinet 585

Chapter 40 Replacing QFX3100 Components 587

Installing and Removing QFX3100 Director Device Hardware Components 587
Removing a Power Supply from a QFX3100 Director Device (includes video) . . 588
Installing a Power Supply in a QFX3100 Director Device (includes video) 589
Removing a Fan Module from a QFX3100 Director Device 590
Installing a Fan Module in a QFX3100 Director Device 592
Removing a Network Module from a QFX3100 Director Device 593
Before you Power Off the Director Device 593
Removing a Network Module from a Director Device 595
Installing a Network Module in a QFX3100 Director Device 596
Before you Power Off the Director Device 596
Installing a Network Module in a Director Device 597
Removing an HDD Module from a QFX3100 Director Device 599
Installing an HDD Module in a QFX3100 Director Device 601

Chapter 41 Replacing QFX3008-I Components 603

Installing and Removing QFX3008-I Interconnect Device Hardware Components 604
Removing an AC Power Supply from a QFX3008-I Interconnect Device 605
Installing an AC Power Supply in a QFX3008-I Interconnect Device 607

Copyright © 2018, Juniper Networks, Inc.

Removing a Wiring Tray from a QFX3008-I Interconnect Device 608
Installing a Wiring Tray in a QFX3008-I Interconnect Device 610
Removing a Bottom Fan Tray and Front Panel Display from a QFX3008-I Interconnect Device 611
Installing a Bottom Fan Tray and Front Panel Display in a QFX3008-I Interconnect Device 613
Removing a Side Fan Tray from a QFX3008-I Interconnect Device 614
Installing a Side Fan Tray in a QFX3008-I Interconnect Device 616
Removing a Top Fan Tray from a QFX3008-I Interconnect Device 618
Installing a Top Fan Tray in a QFX3008-I Interconnect Device 619
Removing a Bottom Air Filter from a QFX3008-I Interconnect Device 620
Installing a Bottom Air Filter in a QFX3008-I Interconnect Device 622
Removing a Side Air Filter from a QFX3008-I Interconnect Device 623
Installing a Side Air Filter in a QFX3008-I Interconnect Device 625
Taking a Control Board Offline in a QFX3008-I Interconnect Device 627
Taking a Master Control Board Offline 628
Taking a Backup Control Board Offline 629
Removing a Control Board from a QFX3008-I Interconnect Device 629
Installing a Control Board in a QFX3008-I Interconnect Device 631
Taking a 16-Port QSFP+ Front Card Offline in a QFX3008-I Interconnect Device 633
Removing a 16-Port QSFP+ Front Card from a QFX3008-I Interconnect Device 634
Installing a 16-Port QSFP+ Front Card in a QFX3008-I Interconnect Device . . . 636
Taking the Rear Card Offline in a QFX3008-I Interconnect Device 638
Removing a Rear Card from a QFX3008-I Interconnect Device 640
Installing a Rear Card in a QFX3008-I Interconnect Device 641

Chapter 42 Replacing QFX3500 Components 645

Installing and Removing QFX3500 Device Hardware Components 645
Installing a Power Supply in a QFX3500 Device 646
Removing a Power Supply from a QFX3500 Device 648
Installing a Fan Tray in a QFX3500 Device 649
Removing a Fan Tray from a QFX3500 Device 651
Installing a Management Board in a QFX3500 Device 652
Removing a Management Board from a QFX3500 Device 654

Chapter 43 Replacing QFX3600 Components 657

Installing and Removing QFX3600 or QFX3600-I Device Hardware Components 657
Removing a Power Supply from a QFX3600 or QFX3600-I Device 658
Installing a Power Supply in a QFX3600 or QFX3600-I Device 660
Removing a Fan Tray from a QFX3600 or QFX3600-I Device 662
Installing a Fan Tray in a QFX3600 or QFX3600-I Device 663

Chapter 44 Replacing QFX5100 Components 665

Installing and Removing QFX5100 Device Hardware Components 665
Removing a Power Supply from a QFX5100 Device 666
Installing a Power Supply in a QFX5100 Device 668
Removing an Expansion Module from a QFX5100 Device 670

 Copyright © 2018, Juniper Networks, Inc.

Installing an Expansion Module in a QFX5100 Device 672
Removing a Fan Module from a QFX5100 Device 675
Installing a Fan Module in a QFX5100 Device 677

Chapter 45 **Replacing EX4300 Components 681**

Removing an AC Power Supply from an EX4300 Switch 681
Installing an AC Power Supply in an EX4300 Switch 683
Removing an Uplink Module from an EX4300 Switch 685
Installing an Uplink Module in an EX4300 Switch 687
Removing a Fan Module from an EX4300 Switch 690
Installing a Fan Module in an EX4300 Switch 691

Chapter 46 **Replacing EX4200 Components 695**

Removing a Power Supply from an EX4200 Switch 695
Installing a Power Supply in an EX4200 Switch 697
Removing an Uplink Module from an EX4200 Switch 699
Installing an Uplink Module in an EX4200 Switch 701
Removing a Fan Tray from an EX4200 Switch 703
Installing a Fan Tray in an EX4200 Switch 705

Chapter 47 **Replacing Transceivers and Fiber-Optic Cables 707**

Removing a Transceiver from a QFX Series Device 707
Installing a Transceiver in a QFX Series Device 709
Disconnecting a Fiber-Optic Cable from a QFX Series Device 711
Connecting a Fiber-Optic Cable to a QFX Series Device 712
Configuring the Port Type on QFX3600 Node Devices 714

Chapter 48 **Routine Maintenance 719**

Maintaining the Air Filters in a QFX3008-I Interconnect Device 719
Maintaining Fiber-Optic Cables in a QFX Series Device 719

Chapter 49 **Viewing QFX3100 System Information 721**

Chassis Status LEDs on a QFX3100 Director Device 721
Management Port LEDs on a QFX3100 Director Device 722
Network Module Port LEDs on a QFX3100 Director Device 723
AC Power Supply LED on a QFX3100 Director Device 724

Chapter 50 **Viewing QFX3008-I System Information 727**

Chassis Status LEDs on a QFX3008-I Interconnect Device 727
Control Board LEDs on a QFX3008-I Interconnect Device 729
16-Port QSFP+ Front Card LEDs on a QFX3008-I Interconnect Device 731
Rear Card LEDs on a QFX3008-I Interconnect Device 733
AC Power Supply LEDs on a QFX3008-I Interconnect Device 734
Wiring Tray LEDs on a QFX3008-I Interconnect Device 735

Chapter 51 **Viewing QFX5100 System Information 737**

Chassis Status LEDs on a QFX5100 Device 737
Management Port LEDs on a QFX5100 Device 739
Access Port and Uplink Port LEDs on a QFX5100 Device 741
Fan Module LED on a QFX5100 Device 744
AC Power Supply LEDs on a QFX5100 Device 745
DC Power Supply LEDs on a QFX5100 Device 746

Copyright © 2018, Juniper Networks, Inc.

Chapter 52 Viewing QFX3600 System Information 749
Chassis Status LEDs in the QFX3600 and QFX3600-I Device 749
Management Port LEDs in the QFX3600 and QFX3600-I Device 750
Access Port and Uplink Port LEDs on a QFX3600 or QFX3600-I Device 751
Fan Tray LED on a QFX3600 or QFX3600-I Device 753
AC Power Supply LEDs on a QFX3500, QFX3600, or QFX3600-I Device 753
DC Power Supply LEDs on a QFX3500, QFX3600, or QFX3600-I Device 754
Chapter 53 Viewing QFX3500 System Information 757
Chassis Status LEDs on a QFX3500 Device 757
Management Port LEDs on a QFX3500 Device 758
Access Port and Uplink Port LEDs on a QFX3500 Device 759
Fan Tray LED on a QFX3500 Device 761
AC Power Supply LEDs on a QFX3500, QFX3600, or QFX3600-I Device 762
DC Power Supply LEDs on a QFX3500, QFX3600, or QFX3600-I Device 763
Chapter 54 Viewing EX4300 System Information 765
LCD Panel in EX4300 Switches 765
LCD Panel Modes 766
LCD Panel Menus 767
Chassis Status LEDs on EX4300 Switches 769
Management Port LEDs on EX4300 Switches 772
Network Port, Built-In QSFP+ Port, Uplink Port, and Uplink Module Port LEDs on EX4300 Switches 773
AC Power Supply LEDs in EX4300 Switches 778
DC Power Supply LEDs in EX4300 Switches 779
Dashboard for EX Series Switches 780
Graphical Chassis Viewer 781
System Information Panel 782
Health Status Panel 784
Capacity Utilization Panel 786
Alarms Panel 786
File System Usage 787
Chassis Viewer 787
Chapter 55 Viewing EX4200 System Information 801
LCD Panel in EX4200 Switches 801
LCD Panel Modes 802
LCD Panel Menus 803
Chassis Status LEDs in EX4200 Switches 806
Management Port LEDs in EX4200 Switches 807
Network Port LEDs in EX4200 Switches 808
AC Power Supply LEDs in EX4200 Switches 813
DC Power Supply LEDs in EX4200 Switches 814
Dashboard for EX Series Switches 814
Graphical Chassis Viewer 815
System Information Panel 817
Health Status Panel 819
Capacity Utilization Panel 821
Alarms Panel 821

 Copyright © 2018, Juniper Networks, Inc.

File System Usage 822
Chassis Viewer 822

Part 6 Troubleshooting

Chapter 56 **Restoring Junos OS 837**

Creating an Emergency Boot Device for QFX Series Switches 837
Performing a Recovery Installation 839
Performing a QFabric System Recovery Installation on the Director Group 841
(Optional) Creating an Emergency Boot Device Using a Juniper Networks External Blank USB Flash Drive 842
Performing a Recovery Installation Using a Juniper Networks External USB Flash Drive with Preloaded Software 844

Chapter 57 **Restoring QFX3100 Volumes 849**

Troubleshooting HDD Module Failures in a RAID Volume 849
Isolating a Director Device 850
Hot-Swapping a Failed HDD Module 851
Restoring an Inactive RAID 851
Restoring a Corrupted RAID 855
Reconnecting the Director Device to the Control Plane 857
Troubleshooting QFX3100 Director Device Isolation 859

Chapter 58 **Returning Hardware 861**

Returning a QFX3100 Director Device or Component for Repair or Replacement 862
Returning a QFX3008-I Interconnect Device or Component for Repair or Replacement 862
Returning a QFX5100 Device or Component for Repair or Replacement 863
Returning a QFX3600 or QFX3600-I Device or Component for Repair or Replacement 863
Returning a QFX3500 Device or Component for Repair or Replacement 864
Returning an EX4300 Switch or Component for Repair or Replacement 865
Returning an EX4200 Switch or Component for Repair or Replacement 865
Locating the Serial Number on a QFX3100 Director Device or Component 866
Listing the Chassis Serial Number with the CLI 866
Locating the Serial Number ID Label on a QFX3100 Director Device 866
Locating Serial Number ID Labels on FRU Components 867
Locating the Serial Number on a QFX3008-I Interconnect Device or Component 867
Listing the Chassis and Component Details with the CLI 868
Locating the Serial Number on a QFX5100 Device or Component 868
Listing the Chassis and Component Details Using the CLI 868
Locating the Chassis Serial Number ID Label on a QFX5100 Switch 869
Locating the Serial Number ID Labels on FRU Components 870
Locating the Serial Number on a QFX3600 or QFX3600-I Device or Component 871
Listing the Chassis and Component Details Using the CLI 871
Locating the Chassis Serial Number ID Label on a QFX3600 or QFX3600-I Device 872

Locating the Serial Number ID Labels on FRU Components 872
Locating the Serial Number on a QFX3500 Device or Component 872
Listing the Chassis and Component Details Using the CLI 873
Locating the Chassis Serial Number ID Label on a QFX3500 Device 873
Locating the Serial Number ID Labels on FRU Components 874
Locating the Serial Number on an EX4300 Switch or Component 874
Listing the Switch and Components Details with the CLI 875
Locating the Chassis Serial Number ID Label on an EX4300 Switch 876
Locating the Serial Number ID Labels on FRUs in an EX4300 Switch 876
Locating the Serial Number on an EX4200 Switch or Component 880
Listing the Switch and Components Details with the CLI 880
Locating the Chassis Serial Number ID Label on an EX4200 Switch 881
Locating the Serial Number ID Labels on FRUs in an EX4200 Switch 881
Packing a QFX3100 Director Device or Component for Shipping 881
Packing a QFX3100 Director Device for Shipping 882
Packing QFX3100 Director Device Components for Shipping 883
Packing a QFX3008-I Interconnect Device or Component for Shipping 883
Packing a QFX3008-I Interconnect Device for Shipping 884
Packing QFX3008-I Interconnect Device Components for Shipping 885
Packing a QFX5100 Device or Component for Shipping 885
Packing a QFX5100 Switch for Shipping 886
Packing QFX5100 Switch Components for Shipping 887
Packing a QFX3600 or QFX3600-I Device or Component for Shipping 887
Packing a QFX3600 or QFX3600-I Device for Shipping 888
Packing QFX3600 or QFX3600-I Device Components for Shipping 888
Packing a QFX3500 Device or Component for Shipping 889
Packing a QFX3500 Device for Shipping 889
Packing QFX3500 Device Components for Shipping 890
Packing an EX4300 Switch or Component for Shipping 890
Packing an EX4300 Switch for Shipping 891
Packing EX4300 Switch Components for Shipping 892
Packing an EX4200 Switch or Component for Shipping 893
Packing an EX4200 Switch for Shipping 893
Packing EX4200 Switch Components for Shipping 894
Contacting Customer Support to Obtain a Return Materials Authorization for a QFX Series Device or Component 895

Chapter 59 Alarms and System Log Messages 897

Understanding Alarms 897
Chassis Alarm Messages on a QFX3008-I Interconnect Device 898
Chassis Alarm Messages on a QFX3600 or QFX3600-I Device 902
Chassis Alarm Messages on a QFX3500 Device 905
Interface Alarm Messages 908
Understanding Alarm Types and Severity Levels on EX Series Switches 908
Checking Active Alarms with the J-Web Interface 910
Monitoring System Log Messages 911

 Copyright © 2018, Juniper Networks, Inc.

List of Figures

Part 1 Overview

Chapter 1 QFX3000-G QFabric System Overview 3

Figure 1: Legacy Data Center Architecture 4
Figure 2: QFX Series QFabric System Architecture 5
Figure 3: QFabric System Hardware Architecture 7
Figure 4: External Routing Engine Types 13
Figure 5: Clos Switching for QFX3008-I Interconnect Devices 15
Figure 6: QFX3008-I Data Plane and Control Plane Connections 16
Figure 7: QFX3600-I Data Plane and Control Plane Connections 17
Figure 8: QFX5100-24Q Data Plane and Control Plane Connections 17
Figure 9: QFX3500 Data Plane and Control Plane Connections 19
Figure 10: QFX3600 Data Plane and Control Plane Connections 20
Figure 11: QFX5100 Data Plane and Control Plane Connections 20

Chapter 2 QFX3100 Overview 25

Figure 12: QFX3100 Director Device Front 26
Figure 13: QFX3100 Director Device Rear 26
Figure 14: QFX3100 Director Device Front Panel View 30
Figure 15: QFX3100 Director Device Rear Panel View 31
Figure 16: Airflow Through the QFX3100 Director Device 32
Figure 17: Network Module in a QFX3100 Director Device 33
Figure 18: Fan Module 34
Figure 19: AC Power Supplies 35

Chapter 3 QFX3008-I Overview 37

Figure 20: QFX3008-I Interconnect Device Front 39
Figure 21: QFX3008-I Interconnect Device Rear 40
Figure 22: Chassis Status LEDs 47
Figure 23: QFX3008-I Interconnect Device Front 48
Figure 24: Location of Bottom and Side Fan Trays 49
Figure 25: Location of Top Fan Tray 50
Figure 26: Airflow Through the Front Card Cage and Powerhouse 51
Figure 27: Airflow Through the Rear Card Cage 51
Figure 28: 16-Port QSFP+ Front Card 53
Figure 29: Control Board in a QFXC08 Chassis 54
Figure 30: Rear Card in a QFX3008-I Interconnect Device 56
Figure 31: AC Power Supply 57
Figure 32: Single-Phase Wiring Tray 60
Figure 33: Three-Phase Wiring Tray 61

Chapter 4 QFX5100 Overview 63

Copyright © 2018, Juniper Networks, Inc.

Figure 34: QFX5100-48S Port Panel 64
Figure 35: QFX5100-48SH Port Panel 65
Figure 36: QFX5100-48T Port Panel 65
Figure 37: QFX5100-48THPort Panel 67
Figure 38: QFX5100-24Q Port Panel 67
Figure 39: QFX-EM-4Q Expansion Module 68
Figure 40: EX4600-EM-8F Expansion Module 69
Figure 41: QFX5100-24Q-AA Port Panel with QFX-PFA-4Q 70
Figure 42: QFX-PFA-4Q Expansion Module 70
Figure 43: QFX5100-96S Port Panel 71
Figure 44: QFX5100-48S Switch Port Panel 78
Figure 45: QFX5100-48T or QFX5100-48TH Switch Port Panel 80
Figure 46: QFX5100-24Q Device Port Panel 81
Figure 47: LEDs on the QSFP+ Uplink Ports 84
Figure 48: QFX5100 Switch, FRU End 1 U Product SKUs 85
Figure 49: QFX5100-96S, FRU End 85
Figure 50: Management Panel Components on 1 U QFX5100 85
Figure 51: Management Panel Components on the QFX5100-96S 86
Figure 52: 1 U Fan Module Used in QFX5100 Switches 89
Figure 53: 2 U Fan Module Used in QFX5100-96S Switches 89
Figure 54: Air In Airflow Through 1 U QFX5100 Switch Chassis 91
Figure 55: Air In Airflow Through 2 U QFX5100 Switch Chassis 91
Figure 56: Air Out Airflow Through 1 U QFX5100 Switch Chassis 92
Figure 57: Air Out Airflow Through 2 U QFX5100 Switch Chassis 92
Figure 58: 1 U AC Power Supply in QFX5100 Switches 94
Figure 59: 2 U AC Power Supply in a QFX5100-96S Switch 95
Figure 60: Power Supply Handle Detail 95
Figure 61: DC Power Supply in QFX5100 Devices 97
Figure 62: DC Power Supply for QFX5100-96S Devices 97
Figure 63: DC Power Supply Faceplate in QFX5100 Devices 98

Chapter 5 QFX3600 Overview 99

Figure 64: QFX3600 Chassis Front 101
Figure 65: QFX3600 Chassis Rear 101
Figure 66: QFX3600 Device Front Panel 106
Figure 67: QFX3600 and QFX3600-I Device Rear Panel 106
Figure 68: Fan Tray for QFX3600 and QFX3600-I Devices 107
Figure 69: FRU-Side-to-Port-Side Airflow Through the QFX3600 and QFX3600-I Chassis 108
Figure 70: Port-to-FRU Airflow Through the QFX3600 and QFX3600-I Chassis 109
Figure 71: Label Identifying Airflow Direction on Power Supply Handle 109
Figure 72: AC Power Supply in QFX3500, QFX3600, or QFX3600-I Devices 111
Figure 73: An Arrow Icon and AFI Label Identifying Airflow Direction on Power Supply Handle 111
Figure 74: A Fan Icon Identifying Airflow Direction on Power Supply Handle 111
Figure 75: DC Power Supply for a QFX3500, QFX3600, or QFX3600-I Device . . 113
Figure 76: DC Power Supply Faceplate 113
Figure 77: Label Identifying Airflow Direction on Power Supply Handle 114

 Copyright © 2018, Juniper Networks, Inc.

Chapter 6 QFX3500 Overview 115

Figure 78: QFX3500 Device Front 117
Figure 79: QFX3500 Device Rear 117
Figure 80: SFP+ Access Port Locations 118
Figure 81: QSFP+ Uplink Port Locations 119
Figure 82: QFX3500 Device Front Panel 122
Figure 83: QFX3500 Device Front 122
Figure 84: QFX3500 Device Rear Panel 124
Figure 85: Fan Tray for a QFX3500 Device 124
Figure 86: Management Board for a QFX3500 Device 125
Figure 87: FRU-to-Port Airflow Through the QFX3500 Chassis 126
Figure 88: Port-to-FRU Airflow Through the QFX3500 Chassis 126
Figure 89: Label Identifying Airflow Direction on Power Supply Handle 127
Figure 90: Management Board for a QFX3500 Device 128
Figure 91: AC Power Supply in QFX3500, QFX3600, or QFX3600-I Devices 130
Figure 92: An Arrow Icon and AFI Label Identifying Airflow Direction on Power Supply Handle 131
Figure 93: A Fan Icon Identifying Airflow Direction on Power Supply Handle 131
Figure 94: DC Power Supply for a QFX3500, QFX3600, or QFX3600-I Device . . 132
Figure 95: DC Power Supply Faceplate 133
Figure 96: Label Identifying Airflow Direction on Power Supply Handle 134

Chapter 7 EX4300 Overview 137

Figure 97: Front Panel of a 24-Port EX4300 Switch 139
Figure 98: Rear Panel of a 24-Port EX4300 Switch 139
Figure 99: Front Panel of a 32-Port EX4300 Switch 140
Figure 100: Rear Panel of a 32-Port EX4300 Switch 141
Figure 101: Front Panel of 48-Port EX4300 Switches Except EX4300-48MP and EX4300-48MP-S Switches 142
Figure 102: Front Panel of EX4300-48MP and EX4300-48MP-S Switches 142
Figure 103: Rear Panel of 48-Port EX4300 Switches Except EX4300-48MP and EX4300-48MP-S Switches 143
Figure 104: Rear Panel of EX4300-48MP and EX4300-48MP-S Switches 143
Figure 105: Components on the Front Panel of a 24-Port EX4300 Switch 150
Figure 106: Components on the Front Panel of a 32-Port EX4300 Switch 150
Figure 107: Components on the Front Panel of 48-Port EX4300 Switches Except EX4300-48MP and EX4300-48MP-S Switches 151
Figure 108: Components on the Front Panel of EX4300-48MP and EX4300-48MP-S Switches 151
Figure 109: Components on the Rear Panel of a 24-Port and 48-Port EX4300 Switch Except EX4300-48MP and EX4300-48MP-S Switches 152
Figure 110: Components on the Rear Panel of a 32-Port EX4300 Switch 152
Figure 111: Components on the Rear Panel of EX4300-48MP and EX4300-48MP-S Switches 153
Figure 112: Fan Module Used in EX4300 Switches Except EX4300-48MP and EX4300-48MP-S Switches 156
Figure 113: Fan Module Used in EX4300-48MP and EX4300-48MP-S Switches 157

Copyright © 2018, Juniper Networks, Inc.

Figure 114: Front-to-Back Airflow Through 24-Port and 48-Port EX4300 Switches Except EX4300-48MP and EX4300-48MP-S Switches 159
Figure 115: Front -to-Back Airflow on EX4300-48MP and EX4300-48MP-S Switches 159
Figure 116: Front-to-Back Airflow Through 32-Port EX4300 Switch Chassis . . . 160
Figure 117: Back-to-Front Airflow Through the 24-Port and 48-Port EX4300 Switches Except EX4300-48MP and EX4300-48MP-S Switches 160
Figure 118: AC Power Supply for EX4300 Switches 163
Figure 119: DC Power Supply for an EX4300 Switch 171
Figure 120: Connecting the Grounding Lug to a Switch Mounted on Four Posts of a Rack 181
Figure 121: Connecting a Grounding Cable to an EX Series Switch 182

Chapter 8 EX4200 Overview 183

Figure 122: Fan Tray Used in an EX4200 Switch 187
Figure 123: Airflow Through the EX4200 Switch Chassis 188
Figure 124: 320 W AC Power Supply 190
Figure 125: 600 W and 930 W AC Power Supplies 190
Figure 126: DC Power Supply 191
Figure 127: Connecting the Grounding Lug to a Switch Mounted on Four Posts of a Rack 198
Figure 128: Connecting a Grounding Cable to an EX Series Switch 199

Part 2 Planning

Chapter 10 Rack and Cabinet Requirements 229

Figure 129: Airflow Through the QFX3100 Director Device 246
Figure 130: Airflow Through the Front Card Cage and Powerhouse 247
Figure 131: Airflow Through the Rear Card Cage 247
Figure 132: Clearance Requirements for Airflow and Hardware Maintenance for a QFX3008-I Interconnect Device 248
Figure 133: Clearance Requirements for Airflow and Hardware Maintenance for a QFX5100 Device 248
Figure 134: Clearance Requirements for Airflow and Hardware Maintenance for a QFX3600 or QFX3600-I Device 249
Figure 135: Clearance Requirements for Airflow and Hardware Maintenance for a QFX3500 Device 250
Figure 136: Front-to-Back Airflow on 24-Port and 48-Port EX4300 Switches Except EX4300-48MP and EX4300-48MP-S Switches 252
Figure 137: Front -to-Back Airflow on EX4300-48MP and EX4300-48MP-S Switches 252
Figure 138: Front-to-Back Airflow on 32-Port EX4300 Switches 252
Figure 139: Back-to-Front Airflow on 24-Port and 48-Port EX4300 Switches . . 253
Figure 140: Clearance Requirements for Airflow and Hardware Maintenance for an EX4300 Switch Chassis Except EX4300-48MP and EX4300-48MP-S Switches 254
Figure 141: Clearance Requirements for Airflow and Hardware Maintenance for an EX4300-48MP and EX4300-48MP-S Switch Chassis 254
Figure 142: Clearance Requirements for Airflow and Hardware Maintenance for EX4200 Switches 255

 Copyright © 2018, Juniper Networks, Inc.

Figure 143: Airflow Through the EX4200 Switch Chassis 255

Chapter 13 **Planning QFX3100 Power Requirements 277**

Figure 144: AC Plug Types 278

Chapter 19 **Planning EX4200 Power Requirements 311**

Figure 145: AC Plug Types 313

Part 3 Safety

Chapter 26 **Power and Electrical Safety Information 359**

Figure 146: Placing a Component into an Antistatic Bag 361

Part 4 Installation

Chapter 28 **Installing a QFX3100 Director Device 377**

Figure 147: Unpacking a QFX3100 Director Device 379
Figure 148: Mounting the QFX3100 Director Device on Two Posts in a Rack 381
Figure 149: Mounting a QFX3100 Director Device on Four Posts in a Rack or Cabinet 383
Figure 150: Connecting an AC Power Cord to an AC Power Supply in a QFX3100 Director Device 384
Figure 151: Connecting the QFX Series to a Management Console Through a Console Server 387
Figure 152: Connecting the QFX Series Directly to a Management Console 387

Chapter 29 **Installing a QFX3008-I Interconnect Device 389**

Figure 153: Installing Four-Post Mounting Shelf and Rear Support Bracket for QFX3008-I Interconnect Device Four-Post Rack or Cabinet Mounting 395
Figure 154: Installing Spacer Bar and Shelves for QFX3008-I Interconnect Device Four-Post Rack or Cabinet Mounting 398
Figure 155: Installing the Mounting Hardware for a Two-Post Rack 402
Figure 156: Installing a QFX3008-I Interconnect Device in a Four-Post Rack . . . 407
Figure 157: Attaching Rear Support Anchors to the QFX3008-I Chassis in a Four-Post Rack 408
Figure 158: Connecting a Grounding Cable to a QFX3008-I Interconnect Device 410
Figure 159: Connecting an AC Power Cord to a Single-Phase Wiring Tray 412
Figure 160: Assembling a Power Cord Using a 90° Connector 414
Figure 161: Assembling a Power Cord Using a Flat Connector 414
Figure 162: Wye Wiring Tray with a 90° Connector Installed 415
Figure 163: Delta Wiring Tray with a Flat Connector Installed 415
Figure 164: Installing a Three-Phase Wiring Tray with a Power Cord Installed . . . 416
Figure 165: Connecting Power to a Three-Phase Delta AC Power Supply 421
Figure 166: Connecting Power to the Three-Phase Wye Wiring Tray 424
Figure 167: Connecting the QFX Series to a Management Console Through a Console Server 426
Figure 168: Connecting the QFX Series Directly to a Management Console 427

Chapter 30 **Installing QFX3008-I Optional Components 429**

Figure 169: Installing the Cable Management System on a QFX3008-I Interconnect Device . . . 430
Figure 170: Installing the Lockable Front Doors on a QFX3008-I Interconnect Device . . . 431

Chapter 31 Installing a QFX5100 Node Device . . . 433

Figure 171: Attaching Mounting Rails to the QFX5100-24Q . . . 438
Figure 172: Attaching Mounting Rails to the QFX5100-48S . . . 438
Figure 173: Attaching Mounting Rails to the QFX5100-96S . . . 438
Figure 174: Attach 1 U Switch to Rack . . . 439
Figure 175: Slide Mounting Rail onto the QFX5100-96S Rear Mounting Blade . . . 439
Figure 176: Slide Mounting Blade into 1 U Mounting Rail . . . 439
Figure 177: Attaching a Two-Post Mounting Bracket to QFX5100-96S . . . 440
Figure 178: Mounting the Switch on Two Posts in a Rack . . . 441
Figure 179: Connecting a Grounding Cable to a 1 U QFX5100 Device . . . 443
Figure 180: Connecting a Grounding Cable to the 2 U QFX5100-96S Device . . . 443
Figure 181: Connecting an AC Power Cord to an AC Power Supply in a 1 U QFX5100 Device . . . 445
Figure 182: Connecting an AC Power Cord to an AC Power Supply in a 2 U QFX5100 Device . . . 445
Figure 183: DC Power Supply Faceplate for a QFX5100 Device . . . 449
Figure 184: Securing Ring Lugs to the Terminals on the QFX5100 DC Power Supply . . . 449
Figure 185: Connecting the QFX Series to a Management Console Through a Console Server . . . 451
Figure 186: Connecting the QFX Series Directly to a Management Console . . . 451

Chapter 32 Installing a QFX3600 Node Device . . . 453

Figure 187: Mounting the Device on Two Posts in a Rack . . . 457
Figure 188: Attaching the Installation Blades to the Rear of the Rack . . . 459
Figure 189: Mounting the Device on Four Posts . . . 461
Figure 190: Connecting a Grounding Cable to a QFX3600 or QFX3600-I Device . . . 463
Figure 191: Connecting an AC Power Cord to an AC Power Supply in a QFX3500 Device . . . 465
Figure 192: Connecting an AC Power Cord to an AC Power Supply in a QFX3600 or QFX3600-I Device . . . 465
Figure 193: DC Power Supply Faceplate for a QFX3500, QFX3600 or QFX3600-I Device . . . 469
Figure 194: Securing Ring Lugs to the Terminals on the QFX3500, QFX3600 or QFX3600-I DC Power Supply . . . 469
Figure 195: Connecting the QFX Series to a Management Console Through a Console Server . . . 470
Figure 196: Connecting the QFX Series Directly to a Management Console . . . 471

Chapter 33 Installing a QFX3500 Node Device . . . 473

Figure 197: Installing an Installation Blade in a Rack . . . 477
Figure 198: Mounting the QFX3500 Device on Four Posts in a Rack Using a Two-Rail Kit . . . 477
Figure 199: Attaching a Mounting Rail to the QFX3500 . . . 478

 Copyright © 2018, Juniper Networks, Inc.

Figure 200: Slide Mounting Rail onto the Rear Mounting Blade 479
Figure 201: Connecting a Grounding Cable to a QFX3500 Device 481
Figure 202: Connecting an AC Power Cord to an AC Power Supply in a QFX3500 Device 483
Figure 203: Connecting an AC Power Cord to an AC Power Supply in a QFX3600 or QFX3600-I Device 483
Figure 204: DC Power Supply Faceplate for a QFX3500, QFX3600 or QFX3600-I Device 487
Figure 205: Securing Ring Lugs to the Terminals on the QFX3500, QFX3600 or QFX3600-I DC Power Supply 487
Figure 206: Connecting the QFX Series to a Management Console Through a Console Server 488
Figure 207: Connecting the QFX Series Directly to a Management Console 489

Chapter 34 Installing the Control Plane Network 491

Figure 208: Four Member EX4200 Virtual Chassis in a Ring Topology 494
Figure 209: Four Member EX4300 Virtual Chassis in a Ring Topology Using Two QSFP+ Ports on Each Switch 494
Figure 210: Four Member EX4300 Virtual Chassis in a Ring Topology Using Three QSFP+ Ports on Each Switch 495
Figure 211: Four Member EX4300 Virtual Chassis in a Ring Topology Using Four QSFP+ Ports on Each Switch 496

Chapter 35 Cabling a Copper-Based Control Plane for the QFX3000-G QFabric System 497

Figure 212: QFX3000-G QFabric System Copper-Based Control Plane—Inter-Virtual Chassis LAG Connections 498
Figure 213: Connecting a Fiber-Optic Cable to an Optical Transceiver Installed in an EX Series Switch 499
Figure 214: QFX3100 Director Group Control Plane Connections for QFX3000-G QFabric System Using Copper-Based Control Plane 500
Figure 215: QFX3100 Director Group Control Plane Connections for QFX3000-G QFabric System Using Fiber-Based Control Plane 501
Figure 216: QFX3100 Director Group Control Plane Connections for QFX3000-M QFabric System 501
Figure 217: QFX3100 Director Group to Virtual Chassis Connections for QFX3000-G QFabric System 503
Figure 218: QFX3008-I Interconnect Device Control Plane Connections 506
Figure 219: QFX5100 Node Device Control Plane Connections 510
Figure 220: QFX3600 Node Device Control Plane Connections 513
Figure 221: QFX3500 Node Device Control Plane Connections 515

Chapter 36 Cabling a Fiber-Based Control Plane for the QFX3000-G QFabric System 519

Figure 222: QFX3000-G QFabric System Fiber-Based Control Plane—Inter-Virtual Chassis LAG Connections 520
Figure 223: Connecting a Fiber-Optic Cable to an Optical Transceiver Installed in an EX Series Switch 521
Figure 224: QFX3100 Director Group Control Plane Connections for QFX3000-G QFabric System Using Copper-Based Control Plane 522

Figure 225: QFX3100 Director Group Control Plane Connections for QFX3000-G QFabric System Using Fiber-Based Control Plane 523
Figure 226: QFX3100 Director Group Control Plane Connections for QFX3000-M QFabric System 523
Figure 227: QFX3100 Director Group to Virtual Chassis Connections for QFX3000-G QFabric System 525
Figure 228: QFX3000-G QFabric System Fiber-Based Control Plane—Interconnect Device to Virtual Chassis Connections 528
Figure 229: QFX5100 Node Device Fiber-Based Control Plane Connections for QFX3000-G QFabric System 534
Figure 230: QFX3600 Node Device Fiber-Based Control Plane Connections for QFX3000-M QFabric System 537
Figure 231: QFX3500 Node Device Fiber-Based Control Plane Connections for QFX3000-G QFabric System 541

Part 5 Maintenance

Chapter 40 **Replacing QFX3100 Components 587**

Figure 232: Removing a Power Supply from a QFX3100 Director Device 589
Figure 233: Installing a Power Supply in a QFX3100 Director Device 590
Figure 234: Removing a Fan Module from a QFX3100 Director Device 592
Figure 235: Installing a Fan Module in a QFX3100 Director Device 593
Figure 236: Removing a Network Module from a QFX3100 Director Device 596
Figure 237: Installing an HDD Module in a QFX3100 Director Device 599
Figure 238: Removing an HDD Module from a QFX3100 Director Device 600
Figure 239: Installing an HDD Module in a QFX3100 Director Device 602

Chapter 41 **Replacing QFX3008-I Components 603**

Figure 240: Removing an AC Power Supply from a QFX3008-I Interconnect Device 606
Figure 241: Installing an AC Power Supply in a QFX3008-I Interconnect Device 608
Figure 242: Removing a Wiring Tray from a QFX3008-I Interconnect Device . . . 609
Figure 243: Installing a Wiring Tray in a QFX3008-I Interconnect Device 611
Figure 244: Removing a Bottom Front Fan Tray from a QFX3008-I Interconnect Device 613
Figure 245: Installing a Bottom Fan Tray in a QFX3008-I Interconnect Device . . 614
Figure 246: Removing a Side Fan Tray from a QFX3008-I Interconnect Device 616
Figure 247: Installing a Side Fan Tray in a QFX3008-I Interconnect Device 617
Figure 248: Removing a Top Fan Tray from a QFX3008-I Interconnect Device 619
Figure 249: Installing a Top Fan Tray in a QFX3008-I Interconnect Device 620
Figure 250: Removing a Bottom Air Filter from a QFX3008-I Interconnect Device 621
Figure 251: Installing a Bottom Air Filter in a QFX3008-I Interconnect Device . . 623
Figure 252: Removing a Side Fan Tray from a QFX3008-I Interconnect Device 624
Figure 253: Removing a Side Air Filter from a QFX3008-I Interconnect Device Side Fan Tray 625

 Copyright © 2018, Juniper Networks, Inc.

Figure 254: Installing a Side Air Filter in a QFX3008-I Interconnect Device Side Fan Tray 626
Figure 255: Installing a Side Fan Tray in a QFX3008-I Interconnect Device 627
Figure 256: Removing a Control Board from a QFX3008-I Interconnect Device 631
Figure 257: Installing a Control Board in a QFX3008-I Interconnect Device 633
Figure 258: Removing a 16-Port Front Card from a QFX3008-I Interconnect Device 635
Figure 259: Installing 16-Port QSFP+ Front Card in a QFX3008-I Interconnect Device 638
Figure 260: Removing a Rear Card from a QFX3008-I Interconnect Device 641
Figure 261: Installing a Rear Card in a QFX3008-I Interconnect Device 643

Chapter 42 **Replacing QFX3500 Components 645**

Figure 262: Installing a Power Supply in a QFX3500 Device 647
Figure 263: Removing a Power Supply from a QFX3500 Device 649
Figure 264: Installing a Fan Tray in a QFX3500 Device 651
Figure 265: Removing a Fan Tray from a QFX3500 Device 652
Figure 266: Installing a Management Board in a QFX3500 Device 653
Figure 267: Removing a Management Board from a QFX3500 Device 655

Chapter 43 **Replacing QFX3600 Components 657**

Figure 268: Removing a Power Supply from a QFX3600 or QFX3600-I Device 660
Figure 269: Installing a Power Supply in a QFX3600 or QFX3600-I Device 661
Figure 270: Removing a Fan Tray from a QFX3600 or QFX3600-I Device 663
Figure 271: Installing a Fan Tray in a QFX3600 or QFX3600-I Device 664

Chapter 44 **Replacing QFX5100 Components 665**

Figure 272: Removing a Power Supply from a 1 U QFX5100 Device 668
Figure 273: Removing a Power Supply from a QFX5100-96S Device 668
Figure 274: Installing a Power Supply in a 1 U QFX5100 Device 669
Figure 275: Installing a Power Supply in a QFX5100-96S Device 669
Figure 276: Removing a QFX-EM-4Q Expansion Module from a QFX5100-24Q Device 671
Figure 277: Removing a QFX-PFA-4Q Expansion Module from a QFX5100-24Q-AA Device 672
Figure 278: QFX-EM-4Q Expansion Module 672
Figure 279: EX4600-EM-8F Expansion Module 673
Figure 280: QFX-PFA-4Q Expansion Module 673
Figure 281: Installing a QFX-EM-4Q Expansion Module in a QFX5100-24Q Device 674
Figure 282: Installing a QFX-PFA-4Q Expansion Module in a QFX5100-24Q-AA Device 675
Figure 283: Removing a Fan Module from a 1 U QFX5100 Device 677
Figure 284: Removing a Fan Module from a 2 U QFX5100-96S Device 677
Figure 285: Installing a Fan Module in a 1 U QFX5100 Device 678
Figure 286: Installing a Fan Module in a 2 U QFX5100-96S Device 678

Chapter 45 **Replacing EX4300 Components 681**

Figure 287: Removing an AC Power Supply from EX4300 Switches Except EX4300-48MP and EX4300-48MP-S Switches 683
Figure 288: Removing an AC Power Supply from EX4300-48MP and EX4300-48MP-S Switches 683
Figure 289: Installing an AC Power Supply in EX4300 Switches Except EX4300-48MP and EX4300-48MP-S Switches 684
Figure 290: Installing an AC Power Supply in EX4300-48MP and EX4300-48MP-S Switches 685
Figure 291: Removing a 4-Port SFP+ Uplink Module from a 24-Port or 48-Port EX4300 Switch Except EX4300-48MP and EX4300-48MP-S Switches . . 687
Figure 292: Removing a 2-Port QSFP+ Uplink Module from a 32-Port EX4300 Switch 687
Figure 293: Removing an 8-Port SFP+ Uplink Module from a 32-Port EX4300 Switch 687
Figure 294: Installing a 4-Port SFP+ Uplink Module in a 24-Port or 48-Port EX4300 Switch Except EX4300-48MP and EX4300-48MP-S Switches . . 689
Figure 295: Installing a 2-Port QSFP+ Uplink Module in a 32-Port EX4300 Switch 689
Figure 296: Installing an 8-Port SFP+ Uplink Module in a 32-Port EX4300 Switch 689
Figure 297: Removing a Fan Module from EX4300 Switches Except EX4300-48MP and EX4300-48MP-S Switches 691
Figure 298: Removing a Fan Module from EX4300-48MP and EX4300-48MP-S Switches 691
Figure 299: Installing a Fan Module in EX4300 Switches Except EX4300-48MP and EX4300-48MP-S Switches 692
Figure 300: Installing a Fan Module in EX4300-48MP and EX4300-48MP-S Switches 693

Chapter 46 Replacing EX4200 Components 695

Figure 301: Removing a Power Supply from the Switch 696
Figure 302: Installing a Power Supply in an EX4200 Switch 698
Figure 303: Sliding the Screwdriver to the Narrow Part of the Keyhole 700
Figure 304: Removing an Uplink Module from an EX4200 Switch 701
Figure 305: Installing an Uplink Module in an EX4200 Switch 703
Figure 306: Removing a Fan Tray from an EX4200 Switch 704
Figure 307: Installing a Fan Tray in an EX4200 Switch 705

Chapter 47 Replacing Transceivers and Fiber-Optic Cables 707

Figure 308: Installing an SFP Transceiver in the QFX Series 710
Figure 309: Installing a QSFP+ Transceiver in the QFX Series—Vertical Orientation 710
Figure 310: Installing a QSFP+ Transceiver in the QFX Series—Horizontal Orientation 710
Figure 311: Installing a QSFP+ Transceiver in a QFX5100-48T 711
Figure 312: Installing a QSFP28 Transceiver in a QFX10002 711

Chapter 49 Viewing QFX3100 System Information 721

Figure 313: Chassis LEDs 721
Figure 314: LEDs on the Management Port on a QFX3100 Director Device 722

Copyright © 2018, Juniper Networks, Inc.

Figure 315: Network Module Port LEDs on a QFX3100 Director Device 723
Figure 316: AC Power Supply LEDs on a QFX3100 Director Device 724

Chapter 50 Viewing QFX3008-I System Information 727

Figure 317: Chassis Status LEDs 727
Figure 318: Control Board LEDs on a QFX3008-I Interconnect Device 729
Figure 319: 16-Port QSFP+ Front Card LEDs on a QFX3008-I Interconnect Device 731
Figure 320: Rear Card LEDs on a QFX3008-I Interconnect Device 733
Figure 321: AC Power Supply LEDs on a QFX3008-I Interconnect Device 734
Figure 322: AC Single-Phase Wiring Tray LEDs on a QFX3008-I Interconnect Device 735
Figure 323: AC Three-Phase Wiring Tray LEDs on a QFX3008-I Interconnect Device 736

Chapter 51 Viewing QFX5100 System Information 737

Figure 324: Chassis Status LEDs on a QFX5100 Switch 737
Figure 325: Management Port LEDs on a QFX5100 Switch 740
Figure 326: Fan Module LED in a QFX5100 Switch 744
Figure 327: AC Power Supply LEDs on a QFX5100 Switch 745
Figure 328: DC Power Supply Faceplate on a QFX5100 Switch 746

Chapter 52 Viewing QFX3600 System Information 749

Figure 329: Chassis Status LEDs in the QFX3600 and QFX3600-I Device 749
Figure 330: LEDs on the Management Ports on a QFX3600 or QFX3600-I Device 751
Figure 331: LEDs on the QSFP+ Access and Uplink Ports 752
Figure 332: Fan Tray 753
Figure 333: AC Power Supply LEDs on a QFX3500, QFX3600, or QFX3600-I Device 754
Figure 334: DC Power Supply Faceplate on a QFX3500, QFX3600, or QFX3600-I Device 755

Chapter 53 Viewing QFX3500 System Information 757

Figure 335: Chassis Status LEDs on a QFX3500 Device 757
Figure 336: Management Port LEDs on a QFX3500 Device 759
Figure 337: LEDs on the SFP+ Access Ports 760
Figure 338: LEDs on the QSFP+ Uplink Ports 760
Figure 339: Fan Tray LED in a QFX3500 Device 761
Figure 340: AC Power Supply LEDs on a QFX3500, QFX3600, or QFX3600-I Device 762
Figure 341: DC Power Supply Faceplate on a QFX3500, QFX3600, or QFX3600-I Device 763

Chapter 54 Viewing EX4300 System Information 765

Figure 342: LCD Panel in EX4300 Switches 765
Figure 343: Chassis Status LEDs in EX4300 Switches Except EX4300-48MP and EX4300-48MP-S Switches 770
Figure 344: Chassis Status LEDs in EX4300-48MP and EX4300-48MP-S Switches 770
Figure 345: LEDs on the Management Port on a 24-Port EX4300 Switch 772

Copyright © 2018, Juniper Networks, Inc.

Figure 346: LEDs on the Management Port on EX4300-48MP and EX4300-48MP-S Switches 772
Figure 347: LEDs on 10/100/1000BASE-T Network Ports and 100/1000/2500/5000/10000BASE-T Network Ports 774
Figure 348: LEDs on the SFP Network Ports on EX4300 Switches Except EX4300-48MP and EX4300-48MP-S Switches 774
Figure 349: LEDs on the Built-In QSFP+ Ports 774
Figure 350: LEDs on the SFP+ Uplink Ports and on the 4-Port SFP+ Uplink Module on EX4300 Switches Except EX4300-48MP and EX4300-48MP-S Switches 774
Figure 351: LEDs on the Ports on the 4-Port 10GbE Uplink Module on EX4300-48MP and EX4300-48MP-S Switches 775
Figure 352: LEDs on the QSFP+ Uplink Module Ports on EX4300 Switches Except EX4300-48MP and EX4300-48MP-S Switches 775
Figure 353: LEDs on the SFP+ Ports on the 8-Port SFP+ Uplink Module on EX4300 Switches Except EX4300-48MP and EX4300-48MP-S Switches 775
Figure 354: LEDs on AC Power Supply for EX4300 Switches 778
Figure 355: DC Power Supply Faceplate on an EX4300 Switch 779

Chapter 55 **Viewing EX4200 System Information 801**

Figure 356: LCD Panel 801
Figure 357: Chassis Status LEDs in an EX4200 Switch 806
Figure 358: LEDs on the Management Port on an EX4200 Switch 808
Figure 359: LEDs on the Network Ports on the Front Panel 809
Figure 360: LEDs on the Uplink Module Ports on the SFP Uplink Module 809
Figure 361: LEDs on the Uplink Module Ports on the SFP+ and SFP+ MACsec Uplink Modules 810
Figure 362: LEDs on the Uplink Module Ports on the XFP Uplink Module 810

Part 6 Troubleshooting

Chapter 58 **Returning Hardware 861**

Figure 363: Location of the Serial Number ID Label on a QFX3100 Director Device 867
Figure 364: Location of the Serial Number ID Label on a QFX5100-96S Switch 869
Figure 365: Location of the Serial Number ID Label on QFX5100-48S and QFX5100-48SH Switches 870
Figure 366: Location of the Serial Number ID Label on QFX5100-48T and QFX5100-48TH Switches 870
Figure 367: Location of the Serial Number ID Label on a QFX5100-24Q Switch 870
Figure 368: Location of the Serial Number ID Label on a QFX3600 or QFX3600-I Device 872
Figure 369: Location of the Serial Number ID Label on a QFX3500 Device 874
Figure 370: Location of the Serial Number ID Label on 24-Port and 48-Port EX4300 Switches Except EX4300-48MP and EX4300-48MP-S Switches 876

 Copyright © 2018, Juniper Networks, Inc.

Figure 371: Location of the Serial Number ID Label on EX4300-48MP and EX4300-48MP-S Switches 876
Figure 372: Location of the Serial Number ID Label on 32-Port EX4300 Switches 876
Figure 373: Location of the Serial Number ID Label on an AC Power Supply Used in EX4300 Switches Except EX4300-48MP and EX4300-48MP-S Switches 877
Figure 374: Location of the Serial Number ID Label on an AC Power Supply Used in EX4300-48MP and EX4300-48MP-S Switches 877
Figure 375: Location of the Serial Number ID Label on a DC Power Supply Used in EX4300 Switches 878
Figure 376: Location of the Serial Number ID Label on the Fan Module Used in an EX4300 Switches Except EX4300-48MP and EX4300-48MP-S Switches 878
Figure 377: Location of the Serial Number ID Label on the Fan Module Used in an EX4300-48MP and EX4300-48MP-S Switches 878
Figure 378: Location of the Serial Number ID Label on the QSFP+ Uplink Module 879
Figure 379: Location of the Serial Number ID Label on the 4-Port SFP+ Uplink Module for EX4300 Switches Except EX4300-48MP and EX4300-48MP-S Switches 879
Figure 380: Location of the Serial Number ID Label on the 8-Port SFP+ Uplink Module 879
Figure 381: Location of the Serial Number ID Label on the 4-Port 10GbE Uplink Module for EX4300-48MP Switches 880
Figure 382: Location of the Serial Number ID Label on an EX4200 Switch 881

Copyright © 2018, Juniper Networks, Inc.

List of Tables

About the Documentation xlv

Table 1: Notice Icons xlvi
Table 2: Text and Syntax Conventions xlvi

Part 1 Overview

Chapter 1 QFX3000-G QFabric System Overview 3

Table 3: Supported QFabric System Hardware Configurations 8

Chapter 2 QFX3100 Overview 25

Table 4: FRUs in a QFX3100 Director Device 28
Table 5: Physical Specifications of the QFX3100 Director Device 29

Chapter 3 QFX3008-I Overview 37

Table 6: FRUs in a QFX3008-I Interconnect Device 42
Table 7: Physical Specifications of a QFX3008-I Interconnect Device 45
Table 8: Power Supply Distribution Pairings for a QFX3008-I Interconnect Device 58

Chapter 4 QFX5100 Overview 63

Table 9: QFX5100 Switch Product Numbers 72
Table 10: FRUs in a QFX5100 Switch 75
Table 11: Physical Specifications for the QFX5100 Switch Chassis 76
Table 12: Port LEDs on a QFX5100-24Q Switch 84
Table 13: Fan Modules in QFX5100 Switches 90
Table 14: Fan Module LED 93
Table 15: Airflow Direction in QFX5100 AC Power Supplies 96

Chapter 5 QFX3600 Overview 99

Table 16: Field-Replaceable Units for QFX3600 and QFX3600-I Devices 102
Table 17: Chassis Physical Specifications for QFX3600 and QFX3600-I Devices 103
Table 18: Airflow Direction in QFX3600 and QFX3600-I Device Models 108
Table 19: Airflow Direction in QFX3600 and QFX3600-I SKUs 110
Table 20: Airfow Direction in QFX3500, QFX3600, or QFX3600-I AC Power Supplies 112
Table 21: Airflow Direction in QFX3500, QFX3600, and QFX3600-I Device DC Power Supplies 114

Chapter 6 QFX3500 Overview 115

Table 22: FRUs in a QFX3500 Device 120
Table 23: Physical Specifications for the QFX3500 Device Chassis 121
Table 24: Airflow Direction in QFX3500 Device Models 125

Table 25: Airflow Direction in QFX3500 Device FRUs 127
Table 26: Airfow Direction in QFX3500 Management Boards 129
Table 27: Airfow Direction in QFX3500, QFX3600, or QFX3600-I AC Power Supplies 131
Table 28: Airflow Direction in QFX3500, QFX3600, and QFX3600-I Device DC Power Supplies 134

Chapter 7 EX4300 Overview 137

Table 29: Components in 24-Port EX4300 Switches 139
Table 30: Components in 32-Port EX4300 Switches 141
Table 31: Components in 48-Port EX4300 Switches 143
Table 32: Uplink Modules for 24-Port and 48-Port EX4300 Switches Except EX4300-48MP and EX4300-48MP-S Switches 146
Table 33: Uplink Modules for 32-Port EX4300 Switches 146
Table 34: Uplink Module for EX4300-48MP and EX4300-48MP-S Switches . . 146
Table 35: Airflow Direction in Power Supplies for EX4300 Switches 148
Table 36: Physical Specifications of the EX4300 Switch Chassis 155
Table 37: Fan Modules in EX4300 Switches 157
Table 38: Airflow Direction in EX4300 Switch Models 158
Table 39: Fan Module Status LED 162
Table 40: Details of the AC Power Supplies in EX4300 Switches 163
Table 41: Airflow Direction in AC Power Supply Models for EX4300 Switches . . 165
Table 42: N+0 AC Power Calculations for 24-Port EX4300 Switches 165
Table 43: N+0 AC Power Calculations for 32-Port EX4300 Switches 166
Table 44: N+0 AC Power Calculations for 48-Port EX4300 Switches Except EX4300-48MP and EX4300-48MP-S Switches 167
Table 45: N+0 AC Power Calculations for EX4300-48MP and EX4300-48MP-S Switches 167
Table 46: N+N AC Power Calculations for 24-Port EX4300 Switches 168
Table 47: N+N AC Power Calculations for 32-Port EX4300 Switches 169
Table 48: N+N AC Power Calculations for 48-Port EX4300 Switches Except EX4300-48MP and EX4300-48MP-S Switches 169
Table 49: N+N AC Power Calculations for EX4300-48MP and EX4300-48MP-S Switches 170
Table 50: Details of the DC Power Supplies in EX4300 Switches 172
Table 51: Airflow Direction in DC Power Supply Models for EX4300 Switches . . . 173
Table 52: N+0 DC Power Calculations for EX4300 Switch Configurations 173
Table 53: N+N DC Power Calculations for EX4300 Switch Configurations 175
Table 54: Parts and Tools Required for Connecting an EX Series Switch to Earth Ground 176
Table 55: Special Instructions to Follow Before Connecting Earth Ground to a Switch 180

Chapter 8 EX4200 Overview 183

Table 56: Physical Specifications of the Switch Chassis 186
Table 57: Power Supply Rating and PoE Power Budget for EX4200 Switch Models 192
Table 58: Parts and Tools Required for Connecting an EX Series Switch to Earth Ground 193

 Copyright © 2018, Juniper Networks, Inc.

Table 59: Special Instructions to Follow Before Connecting Earth Ground to a Switch . . . 197

Part 2 Planning

Chapter 9 Site Preparation . . . 203

Table 60: Number of 10-Gigabit Ethernet Access Ports Supported on Node Devices Based on Oversubscription Ratio . . . 205
Table 61: Maximum Number of Node Devices Supported Based on Oversubscription Ratio and Number of Interconnect Devices . . . 206
Table 62: Number of Connections Required Between Node and Interconnect Devices Based on Oversubscription Ratio . . . 207
Table 63: Site Preparation Checklist . . . 209
Table 64: Site Preparation Checklist for a QFX3008-I Interconnect Device . . . 210
Table 65: Site Preparation Checklist . . . 211
Table 66: Site Preparation Checklist . . . 212
Table 67: Site Preparation Checklist . . . 214
Table 68: Site Preparation Checklist . . . 215
Table 69: Site Preparation Checklist . . . 216
Table 70: Site Electrical Wiring Guidelines . . . 218
Table 71: QFX3100 Director Device Environmental Tolerances . . . 219
Table 72: QFX3008-I Interconnect Device Environmental Tolerances . . . 220
Table 73: QFX3600 and QFX3600-I Device Environmental Tolerances . . . 221
Table 74: QFX3500 Device Environmental Tolerances . . . 222
Table 75: QFX5100 Switch Environmental Tolerances . . . 223
Table 76: EX Series Switch Environmental Tolerances . . . 224

Chapter 10 Rack and Cabinet Requirements . . . 229

Table 77: Rack Requirements and Specifications for the QFX3100 Director Device . . . 230
Table 78: Rack Requirements and Specifications for a QFX3008-I Interconnect Device . . . 231
Table 79: Rack Requirements for the QFX5100 Device . . . 233
Table 80: Rack Requirements for a QFX3600 or QFX3600-I Device . . . 234
Table 81: Rack Requirements for the QFX3500 Device . . . 235
Table 82: Rack Requirements and Specifications for the Switch . . . 236
Table 83: Rack Requirements and Specifications for the Switch . . . 238
Table 84: Cabinet Requirements and Specifications for the QFX3100 Director Device . . . 239
Table 85: Cabinet Requirements and Specifications for a QFX3008-I Interconnect Device . . . 240
Table 86: Cabinet Requirements for the QFX5100 Device . . . 241
Table 87: Cabinet Requirements for a QFX3600 or QFX3600-I Device . . . 242
Table 88: Cabinet Requirements for the QFX3500 Device . . . 243
Table 89: Cabinet Requirements and Specifications for the Switch . . . 243
Table 90: Cabinet Requirements and Specifications for the Switch . . . 245

Chapter 11 Port and Interface Specifications . . . 257

Table 91: Console Port Connector Pinout Information . . . 259
Table 92: RJ-45 Management Port Connector Pinouts for the QFX Series . . . 260

Copyright © 2018, Juniper Networks, Inc.

Table 93: RJ-45 Management Port Connector Pinout Information 261
Table 94: Management Port Connector Pinout Information 262
Table 95: Network Module Port Connector Pinout Information for a QFX3100 Director Device 262

Chapter 12 Cable Specifications 265

Table 96: Cable Specifications for Copper-Based Control Plane Connections for the QFabric System 266
Table 97: QSFP+ and QSFP28 Optical Module Receptacle Pinouts 267
Table 98: QSFP+ MPO Fiber-Optic Crossover Cable Pinouts 267
Table 99: Cable Specifications for Console and Management Connections for the QFX Series 268
Table 100: Estimated Values for Factors Causing Link Loss 272
Table 101: Estimated Values for Factors Causing Link Loss 275

Chapter 13 Planning QFX3100 Power Requirements 277

Table 102: AC Power Specifications for a QFX3100 Director Device 277
Table 103: AC Power Cord Specifications for a QFX3100 Director Device 278

Chapter 14 Planning QFX3008-I Power Requirements 281

Table 104: AC Power Specifications for a QFX3008-I Interconnect Device with Single-Phase Wiring Trays 281
Table 105: AC Power Specifications for a QFX3008-I Interconnect Device with Three-Phase Delta Wiring Trays 282
Table 106: AC Power Specifications for a QFX3008-I Interconnect Device with Three-Phase Wye Wiring Trays 282
Table 107: QFX3008-I Interconnect Device Component Power Requirements 283
Table 108: AC Power Cord Specifications for a Single-Phase Wiring Tray 284
Table 109: Three-Phase Delta AC Power Cord Specifications 286
Table 110: Three-Phase Delta AC Power Cord Specifications 287

Chapter 15 Planning QFX5100 Power Requirements 291

Table 111: AC Power Specifications for a QFX5100 Device 291
Table 112: AC Power Cord Specifications 293
Table 113: DC Power Specifications for a QFX5100 Device 294

Chapter 16 Planning QFX3600 Power Requirements 295

Table 114: AC Power Specifications for a QFX3600 or QFX3600-I Device 295
Table 115: AC Power Cord Specifications 297
Table 116: DC Power Specifications for a QFX3600 or QFX3600-I Device 298

Chapter 17 Planning QFX3500 Power Requirements 299

Table 117: AC Power Specifications for a QFX3500 Device 299
Table 118: AC Power Cord Specifications 301
Table 119: DC Power Specifications for a QFX3500 Device 302

Chapter 18 Planning EX4300 Power Requirements 303

Table 120: Power Supply Specifications of 350 W AC Power Supplies for EX4300 Switches Except EX4300-48MP and EX4300-48MP-S Switches 303
Table 121: Power Supply Specifications of 715 W AC Power Supplies for EX4300 Switches 304

 Copyright © 2018, Juniper Networks, Inc.

Table 122: Power Supply Specifications of 1100 W AC Power Supplies for EX4300 Switches . . . 304
Table 123: Power Supply Specifications of 1400 W AC Power Supplies for EX4300-48MP and EX4300-48MP-S Switches . . . 304
Table 124: AC Power Cord Specifications for 350 W Power Supplies for EX4300 Switches Except EX4300-48MP and EX4300-48MP-S Switches and 715 W AC Power Supplies for EX4300 Switches . . . 305
Table 125: AC Power Cord Specifications for 1100 W AC Power Supplies for EX4300 Switches and 1400 W AC Power Supplies for EX4300-48MP and EX4300-48MP-S Switches . . . 308
Table 126: Power Supply Specifications for DC Power Supplies for EX4300 Switches . . . 309

Chapter 19 **Planning EX4200 Power Requirements . . . 311**

Table 127: AC Power Supply Electrical Specifications . . . 311
Table 128: DC Power Supply Electrical Specifications . . . 311
Table 129: AC Power Cord Specifications . . . 313

Part 4 Installation

Chapter 28 **Installing a QFX3100 Director Device . . . 377**

Table 130: Inventory of Components Provided with a QFX3100 Director Device . . . 379

Chapter 29 **Installing a QFX3008-I Interconnect Device . . . 389**

Table 131: Parts List for QFX3008-I Interconnect Device Configurations . . . 392
Table 132: QFX3008-I Interconnect Device Accessory Kit Contents . . . 392
Table 133: QFX3008-I Interconnect Device Rack Install Accessory Kit Contents . . . 393
Table 134: QFX3008-I Interconnect Device Wiring Tray Accessory Kit Part Contents . . . 393
Table 135: Four-Post Mounting Shelf and Rear Support Bracket Hole Locations . . . 395
Table 136: Four-Post Rack or Cabinet Mounting Hole Locations . . . 398
Table 137: Two-Post Rack Mounting Hole Locations . . . 402

Chapter 31 **Installing a QFX5100 Node Device . . . 433**

Table 138: Inventory of Components Supplied with a QFX5100 Device . . . 435

Chapter 32 **Installing a QFX3600 Node Device . . . 453**

Table 139: Accessory Kit Part Contents . . . 455

Chapter 33 **Installing a QFX3500 Node Device . . . 473**

Table 140: Inventory of Components Supplied with a QFX3500 Device . . . 474

Chapter 35 **Cabling a Copper-Based Control Plane for the QFX3000-G QFabric System . . . 497**

Table 141: Virtual Chassis-to-Virtual Chassis Copper-Based Control Plane Port Assignments . . . 499
Table 142: QFX3100 Director Device-to-Virtual Chassis Control Plane Port Assignments for DG0 . . . 504

Table 143: Second QFX3100 Director Device-to-Virtual Chassis Control Plane Port Assignments for DG1 504
Table 144: Interconnect Device Port Mappings 507
Table 145: QFX5100-48S Node Device-to-Virtual Chassis Copper-Based Control Plane Port Assignments 511
Table 146: QFX3600 Node Device-to-Virtual Chassis Control Plane Port Assignments 514
Table 147: QFX3500 Node Device-to-Virtual Chassis Copper-Based Control Plane Port Assignments 516

Chapter 36 **Cabling a Fiber-Based Control Plane for the QFX3000-G QFabric System 519**

Table 148: Virtual Chassis-to-Virtual Chassis Fiber-Based Control Plane Port Assignments for EX 4200 521
Table 149: Virtual Chassis-to-Virtual Chassis Fiber-Based Control Plane Port Assignments for EX4300 521
Table 150: QFX3100 Director Device-to-VIrtual Chassis Control Plane Port Assignments for DG0 527
Table 151: Second QFX3100 Director Device-to-Virtual Chassis Control Plane Port Assignments for DG1 527
Table 152: Interconnect Device Port Mappings 530
Table 153: QFX5100 Node Device-to-EX4200 Virtual Chassis Fiber-Based Control Plane Port Assignments 535
Table 154: QFX5100-48S Node Device-to-EX4300 Virtual Chassis Copper-Based Control Plane Port Assignments 535
Table 155: QFX3600 Node Device-to-Virtual Chassis Fiber-Based Control Plane Port Assignments 539
Table 156: QFX3600 Node Device-to-EX4300 Virtual Chassis Copper-Based Control Plane Port Assignments 539
Table 157: QFX3500 Node Device-to-Virtual Chassis Fiber-Based Control Plane Port Assignments 542
Table 158: QFX3500 Node Device-to-EX4300 Virtual Chassis Copper-Based Control Plane Port Assignments 542

Part 5 Maintenance

Chapter 49 **Viewing QFX3100 System Information 721**

Table 159: Chassis LEDs on a QFX3100 Director Device 721
Table 160: Link/Activity LED on the Management Port on a QFX3100 Director Device 723
Table 161: Network Module Port LEDs on a QFX3100 Director Device 724
Table 162: Power Supply LED on a QFX3100 Director Device 725

Chapter 50 **Viewing QFX3008-I System Information 727**

Table 163: Chassis Status LEDs on a QFX3008-I Interconnect Device 728
Table 164: Control Board LEDs on a QFX3008-I Interconnect Device 730
Table 165: Control Board SFP+ Port LEDs on a QFX3008-I Interconnect Device 730
Table 166: 16-Port QSFP+ Front Card LEDs on a QFX3008-I Interconnect Device 732

 Copyright © 2018, Juniper Networks, Inc.

Table 167: 16-Port QSFP+ Front Card Port LEDs on a QFX3008-I Interconnect Device . . . 732
Table 168: Rear Card LEDs on a QFX3008-I Interconnect Device . . . 733
Table 169: AC Power Supply LEDs on a QFX3008-I Interconnect Device . . . 734
Table 170: AC Wiring Tray LEDs on a QFX3008-I Interconnect Device . . . 736

Chapter 51 Viewing QFX5100 System Information . . . 737

Table 171: Chassis Status LEDs on a QFX5100 Switch . . . 738
Table 172: Management Port LEDs on a QFX5100 Switch . . . 741
Table 173: QFX5100 Access Port and Uplink LED Locations . . . 742
Table 174: Network Port LEDs on SFP+ Ports on a QFX5100 Switch . . . 743
Table 175: Network Port LEDs on QSFP+ Ports on a QFX5100 Switch . . . 744
Table 176: Fan Tray LED in a QFX5100 Switch . . . 745
Table 177: AC Power Supply LEDs on a QFX5100 Switch . . . 745
Table 178: DC Power Supply LEDs on a QFX5100 Switch . . . 747

Chapter 52 Viewing QFX3600 System Information . . . 749

Table 179: Chassis Status LEDs in the QFX3600 and QFX3600-I Device . . . 750
Table 180: Management Port LEDs in a QFX3600 or QFX3600-I Device . . . 751
Table 181: Access Port LEDs on QSFP+ Ports on a QFX3600 Device . . . 752
Table 182: Uplink Port LEDs on a QFX3600 or QFX3600-I Device . . . 752
Table 183: Fan Tray LED . . . 753
Table 184: AC Power Supply LEDs on a QFX3500, QFX3600, or QFX3600-I Device . . . 754
Table 185: DC Power Supply LEDs on a QFX3500, QFX3600, or QFX3600-I Device . . . 755

Chapter 53 Viewing QFX3500 System Information . . . 757

Table 186: Chassis Status LEDs on a QFX3500 Device . . . 758
Table 187: Management Port LEDs on a QFX3500 Device . . . 759
Table 188: Network Port LEDs on SFP+ Access Ports on a QFX3500 Device . . . 760
Table 189: Uplink Port LEDs on QSFP+ Uplink Ports on a QFX3500 Device . . . 761
Table 190: Fan Tray LED in a QFX3500 Device . . . 762
Table 191: AC Power Supply LEDs on a QFX3500, QFX3600, or QFX3600-I Device . . . 762
Table 192: DC Power Supply LEDs on a QFX3500, QFX3600, or QFX3600-I Device . . . 764

Chapter 54 Viewing EX4300 System Information . . . 765

Table 193: LCD Panel Menu Options in EX4300 Switches . . . 767
Table 194: Chassis Status LEDs on an EX4300 Switch . . . 771
Table 195: Link/Activity LED on the Management Port on an EX4300 Switch . . . 772
Table 196: Status LED on the Management Port on an EX4300 Switch . . . 773
Table 197: Link/Activity LED . . . 776
Table 198: Status LED on 10/100/1000BASE-T Ethernet Network Ports and SFP Network Ports on EX4300 Switches Except EX4300-48MP and EX4300-48MP-S Switches . . . 776
Table 199: Status LED on 100/1000/2500/5000/10000BASE-T Ethernet Network Ports on EX4300-48MP and EX4300-48MP-S Switches . . . 777
Table 200: Status LED on SFP+ Uplink Ports and SFP+ Uplink Module Ports . . . 777

Table 201: Status LED on QSFP+ Ports 778
Table 202: AC Power Supply LEDs in EX4300 Switches 778
Table 203: DC Power Supply LEDs on an EX4300 Switch 779
Table 204: Details of a Virtual Chassis Member Switch 781
Table 205: Status of a Member Switch in a Virtual Chassis 781
Table 206: System Information 782
Table 207: Health Status 784
Table 208: Capacity Utilization 786
Table 209: Chassis Viewer for EX2200 Switches 787
Table 210: Chassis Viewer for EX2200-C Switches 788
Table 211: Chassis Viewer for EX3200, EX3300, and EX4200 Switches 788
Table 212: Chassis Viewer for EX4300 Switches 790
Table 213: Chassis Viewer for EX4500 Switches 791
Table 214: Chassis Viewer for EX4550 Switches 792
Table 215: Chassis Viewer for EX4600 Switches 794
Table 216: Chassis Viewer for EX6210 Switches 794
Table 217: Chassis Viewer for EX8208 Switches 795
Table 218: Chassis Viewer for EX8216 Switches 797
Table 219: Chassis Viewer for XRE200 External Routing Engines 797

Chapter 55 **Viewing EX4200 System Information 801**

Table 220: LCD Panel Menu Options 803
Table 221: Chassis Status LEDs in an EX4200 Switch 806
Table 222: Link/Activity LED on the Management Port on EX4200 Switches . . 808
Table 223: Status LED on the Management Port on EX4200 Switches 808
Table 224: Link/Activity LED on Network Ports 810
Table 225: Status LED on Network Ports 812
Table 226: AC Power Supply LEDs 813
Table 227: DC Power Supply LEDs 814
Table 228: Details of a Virtual Chassis Member Switch 815
Table 229: Status of a Member Switch in a Virtual Chassis 816
Table 230: System Information 817
Table 231: Health Status 819
Table 232: Capacity Utilization 821
Table 233: Chassis Viewer for EX2200 Switches 822
Table 234: Chassis Viewer for EX2200-C Switches 823
Table 235: Chassis Viewer for EX3200, EX3300, and EX4200 Switches 823
Table 236: Chassis Viewer for EX4300 Switches 825
Table 237: Chassis Viewer for EX4500 Switches 826
Table 238: Chassis Viewer for EX4550 Switches 827
Table 239: Chassis Viewer for EX4600 Switches 829
Table 240: Chassis Viewer for EX6210 Switches 829
Table 241: Chassis Viewer for EX8208 Switches 830
Table 242: Chassis Viewer for EX8216 Switches 832
Table 243: Chassis Viewer for XRE200 External Routing Engines 832

Part 6 **Troubleshooting**

Chapter 59 **Alarms and System Log Messages 897**

Table 244: Alarm Terms and Definitions 897

 Copyright © 2018, Juniper Networks, Inc.

Table 245: QFX3008-I Chassis Alarm Messages 899
Table 246: QFX3600 and QFX3600-I Chassis Alarm Messages 903
Table 247: QFX3500 Chassis Alarm Messages 906
Table 248: Alarm Terms 909
Table 249: Summary of Key Alarm Output Fields 910
Table 250: Filtering System Log Messages 911
Table 251: Viewing System Log Messages 913

Copyright © 2018, Juniper Networks, Inc.

About the Documentation

- Documentation and Release Notes on page xlv
- Documentation Conventions on page xlv
- Documentation Feedback on page xlvii
- Requesting Technical Support on page xlviii

Documentation and Release Notes

To obtain the most current version of all Juniper Networks® technical documentation, see the product documentation page on the Juniper Networks website at https://www.juniper.net/documentation/.

If the information in the latest release notes differs from the information in the documentation, follow the product Release Notes.

Juniper Networks Books publishes books by Juniper Networks engineers and subject matter experts. These books go beyond the technical documentation to explore the nuances of network architecture, deployment, and administration. The current list can be viewed at https://www.juniper.net/books.

Documentation Conventions

Table 1 on page xlvi defines notice icons used in this guide.

Table 1: Notice Icons

Icon	Meaning	Description
	Informational note	Indicates important features or instructions.
	Caution	Indicates a situation that might result in loss of data or hardware damage.
	Warning	Alerts you to the risk of personal injury or death.
	Laser warning	Alerts you to the risk of personal injury from a laser.
	Tip	Indicates helpful information.
	Best practice	Alerts you to a recommended use or implementation.

Table 2 on page xlvi defines the text and syntax conventions used in this guide.

Table 2: Text and Syntax Conventions

Convention	Description	Examples
Bold text like this	Represents text that you type.	To enter configuration mode, type the **configure** command: user@host> **configure**
`Fixed-width text like this`	Represents output that appears on the terminal screen.	`user@host>` **show chassis alarms** `No alarms currently active`
Italic text like this	• Introduces or emphasizes important new terms. • Identifies guide names. • Identifies RFC and Internet draft titles.	• A policy *term* is a named structure that defines match conditions and actions. • *Junos OS CLI User Guide* • RFC 1997, *BGP Communities Attribute*
Italic text like this	Represents variables (options for which you substitute a value) in commands or configuration statements.	Configure the machine's domain name: [edit] root@# **set system domain-name** *domain-name*

Copyright © 2018, Juniper Networks, Inc.

Table 2: Text and Syntax Conventions (continued)

Convention	Description	Examples
Text like this	Represents names of configuration statements, commands, files, and directories; configuration hierarchy levels; or labels on routing platform components.	• To configure a stub area, include the **stub** statement at the **[edit protocols ospf area area-id]** hierarchy level. • The console port is labeled **CONSOLE**.
< > (angle brackets)	Encloses optional keywords or variables.	**stub <default-metric *metric*>;**
| (pipe symbol)	Indicates a choice between the mutually exclusive keywords or variables on either side of the symbol. The set of choices is often enclosed in parentheses for clarity.	**broadcast | multicast** **(*string1* | *string2* | *string3*)**
# (pound sign)	Indicates a comment specified on the same line as the configuration statement to which it applies.	**rsvp { # Required for dynamic MPLS only**
[ ] (square brackets)	Encloses a variable for which you can substitute one or more values.	**community name members [*community-ids*]**
Indention and braces ({ })	Identifies a level in the configuration hierarchy.	**[edit]** **routing-options {** **static {** **route default {** **nexthop *address*;** **retain;** **}** **}** **}**
; (semicolon)	Identifies a leaf statement at a configuration hierarchy level.	
GUI Conventions		
Bold text like this	Represents graphical user interface (GUI) items you click or select.	• In the Logical Interfaces box, select **All Interfaces**. • To cancel the configuration, click **Cancel**.
> (bold right angle bracket)	Separates levels in a hierarchy of menu selections.	In the configuration editor hierarchy, select **Protocols>Ospf**.

Documentation Feedback

We encourage you to provide feedback so that we can improve our documentation. You can use either of the following methods:

- Online feedback system—Click TechLibrary Feedback, on the lower right of any page on the Juniper Networks TechLibrary site, and do one of the following:

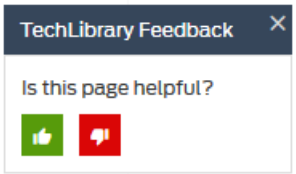

  - Click the thumbs-up icon if the information on the page was helpful to you.
  - Click the thumbs-down icon if the information on the page was not helpful to you or if you have suggestions for improvement, and use the pop-up form to provide feedback.

- E-mail—Send your comments to **techpubs-comments@juniper.net**. Include the document or topic name, URL or page number, and software version (if applicable).

Requesting Technical Support

Technical product support is available through the Juniper Networks Technical Assistance Center (JTAC). If you are a customer with an active J-Care or Partner Support Service support contract, or are covered under warranty, and need post-sales technical support, you can access our tools and resources online or open a case with JTAC.

- JTAC policies—For a complete understanding of our JTAC procedures and policies, review the *JTAC User Guide* located at https://www.juniper.net/us/en/local/pdf/resource-guides/7100059-en.pdf.
- Product warranties—For product warranty information, visit https://www.juniper.net/support/warranty/.
- JTAC hours of operation—The JTAC centers have resources available 24 hours a day, 7 days a week, 365 days a year.

Self-Help Online Tools and Resources

For quick and easy problem resolution, Juniper Networks has designed an online self-service portal called the Customer Support Center (CSC) that provides you with the following features:

- Find CSC offerings: https://www.juniper.net/customers/support/
- Search for known bugs: https://prsearch.juniper.net/
- Find product documentation: https://www.juniper.net/documentation/
- Find solutions and answer questions using our Knowledge Base: https://kb.juniper.net/
- Download the latest versions of software and review release notes: https://www.juniper.net/customers/csc/software/
- Search technical bulletins for relevant hardware and software notifications: https://kb.juniper.net/InfoCenter/

Copyright © 2018, Juniper Networks, Inc.

- Join and participate in the Juniper Networks Community Forum: https://www.juniper.net/company/communities/
- Open a case online in the CSC Case Management tool: https://www.juniper.net/cm/

To verify service entitlement by product serial number, use our Serial Number Entitlement (SNE) Tool: https://entitlementsearch.juniper.net/entitlementsearch/

Opening a Case with JTAC

You can open a case with JTAC on the Web or by telephone.

- Use the Case Management tool in the CSC at https://www.juniper.net/cm/.
- Call 1-888-314-JTAC (1-888-314-5822 toll-free in the USA, Canada, and Mexico).

For international or direct-dial options in countries without toll-free numbers, see https://www.juniper.net/support/requesting-support.html.

Copyright © 2018, Juniper Networks, Inc.

PART 1

Overview

- QFX3000-G QFabric System Overview on page 3
- QFX3100 Overview on page 25
- QFX3008-I Overview on page 37
- QFX5100 Overview on page 63
- QFX3600 Overview on page 99
- QFX3500 Overview on page 115
- EX4300 Overview on page 137
- EX4200 Overview on page 183

Copyright © 2018, Juniper Networks, Inc.

Copyright © 2018, Juniper Networks, Inc.

CHAPTER 1

QFX3000-G QFabric System Overview

- QFabric System Overview on page 3
- Understanding the QFabric System Hardware Architecture on page 7
- Understanding QFX3000-G QFabric System Hardware Configurations on page 10
- Understanding the Director Group on page 12
- Understanding Routing Engines in the QFabric System on page 13
- Understanding Interconnect Devices on page 14
- Understanding Node Devices on page 18
- Understanding Node Groups on page 22

QFabric System Overview

The architecture of legacy data centers contrasts significantly with the revolutionary Juniper Networks data center solution.

- Legacy Data Center Architecture on page 3
- QFX Series QFabric System Architecture on page 5

Legacy Data Center Architecture

Service providers and companies that support data centers are familiar with legacy multi-tiered architectures, as seen in Figure 1 on page 4.

Copyright © 2018, Juniper Networks, Inc.

Figure 1: Legacy Data Center Architecture

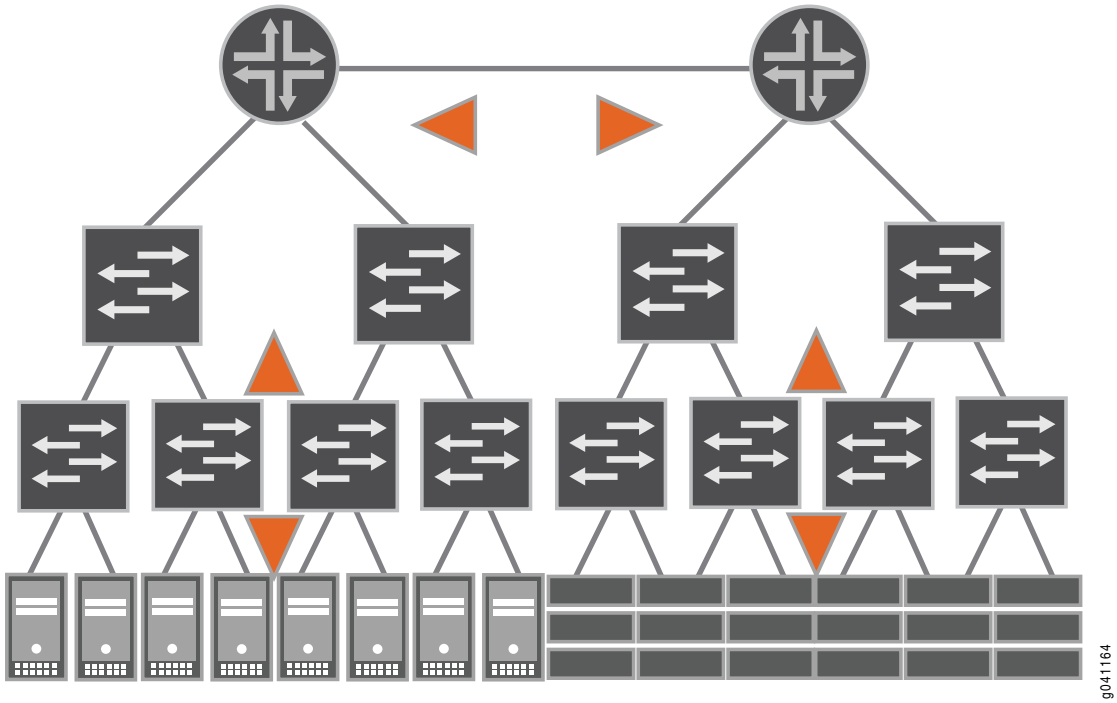

The *access layer* connects servers and other devices to a Layer 2 switch and provides an entry point into the data center. Several access switches are in turn connected to intermediate Layer 2 switches at the *aggregation layer* (sometimes referred to as the *distribution layer*) to consolidate traffic. A *core layer* interconnects the aggregation layer switches. Finally, the core switches are connected to Layer 3 routers in the *routing layer* to send the aggregated data center traffic to other data centers or a wide area network (WAN), receive external traffic destined for the data center, and interconnect different Layer 2 broadcast domains within the data center.

The problems that exist with the multi-tiered data center architecture include:

- **Limited scalability**—The demands for electrical power, cooling, cabling, rack space, and port density increase exponentially as the traditional data center expands, which prohibits growth after minimal thresholds are met.
- **Inefficient resource usage**—Up to 50 percent of switch ports in a legacy data center are used to interconnect different tiers rather than support server and storage connections. In addition, traffic that ideally should move horizontally between servers within a data center often must also be sent vertically up through the tiers to reach a router and down through the tiers to reach the required destination server.
- **Increased latency**—By requiring the devices at each tier level to perform multiple iterations of packet and frame processing, the data plane traffic takes significantly longer to reach its destination than if the sending and receiving devices were directly connected. This processing overhead results in potentially poor performance for time-sensitive applications, such as voice, video, or financial transactions.

Copyright © 2018, Juniper Networks, Inc.

QFX Series QFabric System Architecture

In contrast to legacy multi-tiered data center architectures, the Juniper Networks QFX Series QFabric System architecture provides a simplified networking environment that solves the most challenging issues faced by data center operators. A fabric is a set of devices that act in concert to behave as a single switch. It is a highly scalable, distributed, Layer 2 and Layer 3 networking architecture that provides a high-performance, low-latency, and unified interconnect solution for next-generation data centers as seen in Figure 2 on page 5.

Figure 2: QFX Series QFabric System Architecture

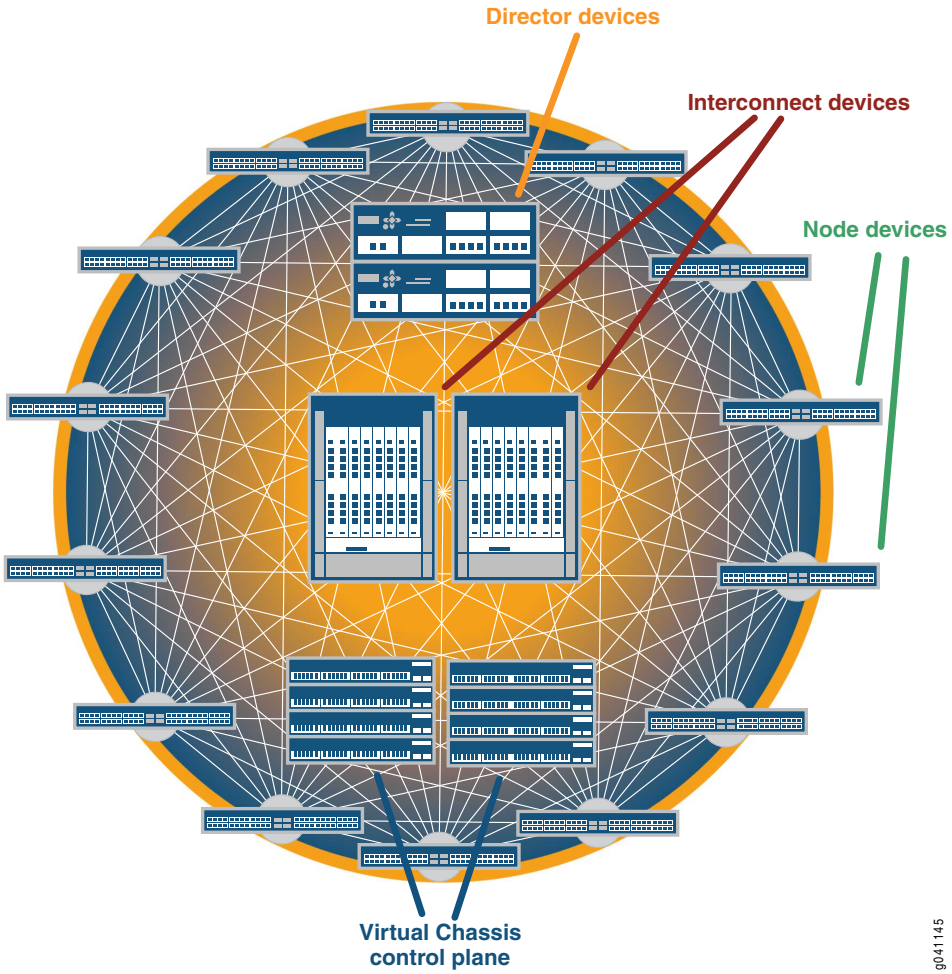

A QFabric system collapses the traditional multi-tiered data center model into a single tier where all access layer devices (known in the QFabric system model as *Node devices*) are essentially directly connected to all other access layer devices across a very large scale fabric backplane (known in the QFabric system model as the *Interconnect device*). Such an architecture enables the consolidation of data center endpoints (such as servers, storage devices, memory, appliances, and routers) and provides better scaling and network virtualization capabilities than traditional data centers.

Copyright © 2018, Juniper Networks, Inc.

Essentially, a QFabric system can be viewed as a single, nonblocking, low-latency switch that supports thousands of 10-Gigabit Ethernet ports or 2-Gbps, 4-Gbps, or 8-Gbps Fibre Channel ports to interconnect servers, storage, and the Internet across a high-speed, high-performance fabric. The entire QFabric system is managed as a single entity through a *Director group*, containing redundant hardware and software components that can be expanded and scaled as the QFabric system grows in size. In addition, the Director group automatically senses when devices are added or removed from the QFabric system and dynamically adjusts the amount of processing resources required to support the system. Such intelligence helps the QFabric system use the minimum amount of power to run the system efficiently, but not waste energy on unused components.

As a result of the QFabric system architecture, data center operators are now realizing the benefits of this next-generation architecture, including:

- **Low latency**—Because of its inherent advantages in this area, the QFabric system provides an excellent foundation for mission-critical applications such as financial transactions and stock trades, as well as time-sensitive applications such as voice and video.
- **Enhanced scalability**—The QFabric system can be managed as a single entity and provides support for thousands of data center devices. As Internet traffic continues to grow exponentially with the increase in high-quality video transmissions and rise in the number of mobile devices used worldwide, the QFabric system can keep pace with the demands for bandwidth, applications, and services offered by the data center.
- **Virtualization-enabled**—The QFabric system was designed to work seamlessly with virtual servers, virtual appliances, and other virtual devices, allowing for even greater scalability, expandability, and rapid deployment of new services than ever before. Migrating to virtual devices also results in significant costs savings, fueled by reduced space requirements, decreased needs for power and cooling, and increased processing capabilities.
- **Simplicity**—Although the QFabric system can scale to hundreds of devices and thousands of ports, you can still manage the QFabric system as a single system.
- **Flexibility**—You can deploy the QFabric system as an entire system or in stages.
- **Convergence**—Because the congestion-free fabric is lossless, all traffic in a QFabric system can be converged onto a single network. As a result, the QFabric system supports Ethernet, Fibre Channel over Ethernet, and native Fibre Channel packets and frames.

Flat, nonblocking, and lossless, the network fabric offered by the QFabric system has the scale and flexibility to meet the needs of small, medium, and large-sized data centers for years to come.

Related Documentation

- *Understanding QFabric System Terminology*
- Understanding the QFabric System Hardware Architecture on page 7
- *Understanding the QFabric System Software Architecture*

Copyright © 2018, Juniper Networks, Inc.

Understanding the QFabric System Hardware Architecture

- QFabric System Hardware Architecture Overview on page 7
- QFX3000-G QFabric System Features on page 9
- QFX3000-M QFabric System Features on page 10

QFabric System Hardware Architecture Overview

The QFabric system is a single-layer networking tier that connects servers and storage devices to one another across a high-speed, unified core fabric. You can view the QFabric system as a single, extremely large, nonblocking, high-performance Layer 2 and Layer 3 switching system. The reason you can consider the QFabric system as a single system is that the Director software running on the Director group allows the main QFabric system administrator to access and configure every device and port in the QFabric system from a single location. Although you configure the system as a single entity, the fabric contains four major hardware components. The hardware components can be chassis-based, group-based, or a hybrid of the two. As a result, it is important to understand the four types of generic QFabric system components and their functions, regardless of which hardware environment you decide to implement. A representation of these components is shown in Figure 3 on page 7.

Figure 3: QFabric System Hardware Architecture

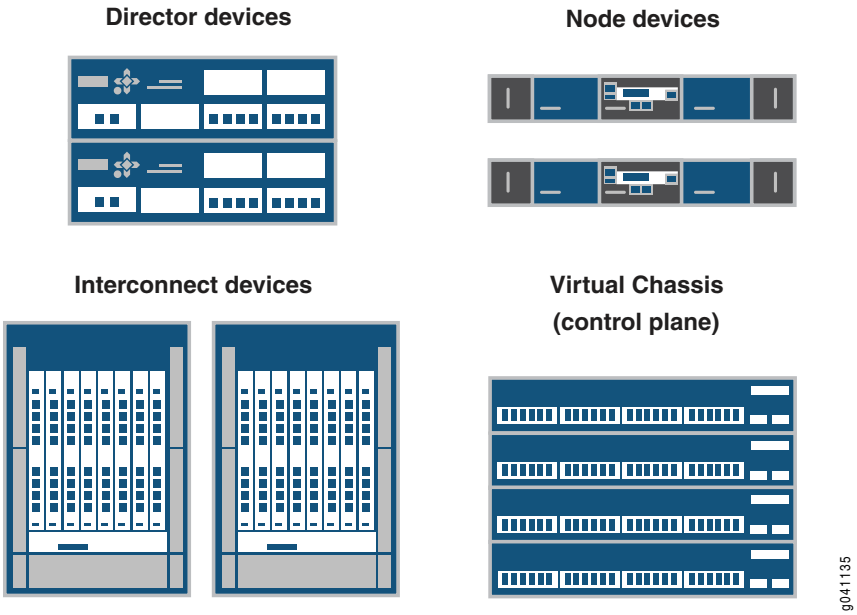

The four major QFabric system components include the following:

- **Director group**—The *Director group* is a management platform that establishes, monitors, and maintains all components in the QFabric system. It is a set of Director devices that run the Junos operating system (Junos OS) on top of a CentOS foundation. The Director group handles tasks such as QFabric system network topology discovery, Node and Interconnect device configuration and startup, and Domain Name System (DNS), Dynamic Host Configuration Protocol (DHCP), and Network File System (NFS) services. The Director group also runs the software for management applications, hosts and load-balances internal processes for the QFabric system, and starts additional QFabric system processes as requested.
- **Node devices**—A *Node device* is a hardware system located on the ingress of the QFabric system that connects to endpoints (such as servers or storage devices) or external networks, and is connected to the heart of the QFabric system through an Interconnect device. A Node device can be used in a manner similar to how a top-of-rack switch is implemented. By default, Node devices connect to servers or storage devices. However, when you group Node devices together to connect to a network that is external to the QFabric system, the formation is known as a *network Node group*.
- **Interconnect devices**—An *Interconnect device* acts as the primary fabric for data plane traffic traversing the QFabric system between Node devices. To reduce latency to a minimum, the Interconnect device implements multistage Clos switching to provide nonblocking interconnections between any of the Node devices in the system.
- **Control plane network**—The *control plane network* is an out-of-band Gigabit Ethernet management network that connects all QFabric system components. For example, you can use a group of EX4200 Ethernet switches or a group of EX4300 Ethernet switches configured as a Virtual Chassis to enable the control plane network. The control plane network connects the Director group to the management ports of the Node and Interconnect devices. By keeping the control plane network separate from the data plane, the QFabric system can scale to support thousands of servers and storage devices.

The four major QFabric system components can be assembled from a variety of hardware options. Currently supported hardware configurations are shown in Table 3 on page 8.

Table 3: Supported QFabric System Hardware Configurations

QFabric System Configuration	Director Group	Node Device	Interconnect Device	Control Plane Device
QFX3000-G QFabric system	QFX3100 Director group	QFX3500, QFX3600, and QFX5100-48S, QFX5100-48T, and QFX5100-24Q Node devices NOTE: There can be a maximum of 128 Node devices in the QFX3000-G QFabric system.	QFX3008-I Interconnect device NOTE: There can be a maximum of four Interconnect devices in the QFX3000-G QFabric system.	Two Virtual Chassis composed of either four EX4200-48T or four EX4300-48T switches each (for a copper-based control plane) or eight EX4200-24F or four EX4300-48P switches each (for a fiber-based control plane)

Copyright © 2018, Juniper Networks, Inc.

Table 3: Supported QFabric System Hardware Configurations (continued)

QFabric System Configuration	Director Group	Node Device	Interconnect Device	Control Plane Device
QFX3000-M QFabric system	QFX3100 Director group NOTE: For a copper-based QFX3000-M QFabric system control plane network, use QFX3100 Director devices with RJ-45 network modules installed. For a fiber-based control plane network, use QFX3100 Director devices with SFP network modules installed.	QFX3500, QFX3600, and QFX5100-48S, QFX5100-48T, and QFX5100-24Q Node devices NOTE: • There can be a maximum of 16 Node devices in the QFX3000-M QFabric system using QFX3600-I as Interconnect devices and 32 Node devices using the QFX5100-24Q as Interconnec devices. NOTE: QFX5100-24Q Interconnect devices and QFX3600-I Interconnect devices cannot be mixed on the same QFabric system. • For a copper-based QFX3000-M QFabric system control plane network, use QFX3500 Node devices with a 1000BASE-T management board installed. For a fiber-based control plane network, use QFX3500 Node devices with an SFP management board installed.	QFX5100-24Q or QFX3600-I Interconnect devices NOTE: There can be a maximum of four Interconnect devices in the QFX3000-M QFabric system.	Two EX4200 Ethernet or two EX4300 switches NOTE: For a copper-based QFX3000-M QFabric system control plane network, use EX4200-24T or EX4300-48T switches with an SFP+ uplink module installed. For a fiber-based control plane network, use EX4200-24F or EX4300-48P switches with an SFP+ uplink module installed.

To complete the system, external Routing Engines (such as the fabric manager Routing Engines, network Node group Routing Engines, and fabric control Routing Engines) run on the Director group and implement QFabric system control plane functions. The control plane network provides the control plane connections between the Node devices, the Interconnect devices, and the Routing Engines running on the Director group.

QFX3000-G QFabric System Features

A QFX3000-G QFabric system provides the following key features:

- Support for up to 128 Node devices and 4 Interconnect devices, which provides a maximum of 6144 10-Gigabit Ethernet ports.
- Low port-to-port latencies that scale as the system size grows from 48 to 6144 10-Gigabit Ethernet ports.
- Support for up to 384,000 total ingress queues at each Node device to the QFabric system Interconnect backplane.
- Support for Converged Enhanced Ethernet (CEE) traffic.

Copyright © 2018, Juniper Networks, Inc.

QFX3000-M QFabric System Features

A QFX3000-M QFabric system provides the following key features:

- Support for up to 32 Node devices and 4 QFX5100-24Q Interconnect devices or 16 Node device and 4 QFX3600-I Interconnect devices.

  NOTE: **You may not mix QFX5100-24Q Interconnect devices with QFX3600-I Interconnect devices on the same QFX3000-M QFabric system.**

- Low port-to-port latencies that scale as the system size grows from 48 to 768 10-Gigabit Ethernet ports.

Related Documentation

- *Understanding QFabric System Terminology*
- *Understanding the QFabric System Software Architecture*
- Understanding the Director Group on page 12
- Understanding Routing Engines in the QFabric System on page 13
- Understanding Interconnect Devices on page 14
- Understanding Node Devices on page 18
- Understanding Node Groups on page 22
- *Understanding Partitions*

Understanding QFX3000-G QFabric System Hardware Configurations

The QFX3000-G QFabric system is made up of multiple hardware components:

- EX4200 switches—Eight EX4200 switches are required for a QFX3000-G QFabric system. The EX4200 switches are divided into two Virtual Chassis configurations with four switches each.
  - Up to 192 Gigabit Ethernet RJ-45 ports on each Virtual Chassis provide control plane and management network interconnection.
  - Four 10-Gigabit Ethernet uplink ports on each Virtual Chassis interconnect the two Virtual Chassis configurations.
- QFX3100 Director devices—Two QFX3100 Director devices are required for a QFX3000-G QFabric system. Together, the two Director devices are called a *Director group*.
  - Six Gigabit Ethernet RJ-45 or six small-form factor pluggable (SFP) ports on each QFX3100 Director device provide connection to the control plane and management network through the Virtual Chassis.
  - Two Gigabit Ethernet RJ-45 or two SFP ports on each QFX3100 Director device interconnect two Director devices in a Director group.

Copyright © 2018, Juniper Networks, Inc.

  - One Gigabit Ethernet RJ-45 management port on each QFX3100 Director device provides connection to the management network through your out-of-band management network.

- QFX3500 , QFX3600, and QFX5100-48S, QFX5100-48T, and QFX5100-24Q Node devices—Up to 128 Node devices can be connected to the QFX3000-G QFabric system.

  - NOTE: Up to eight Node devices can be configured as a *network Node group* to connect to external networks. See "Understanding Node Groups" on page 22.

  - Four 40-Gbps quad small form-factor pluggable plus (QSFP+) uplink ports on each QFX3500 or QFX5100 Node device connect to the data plane network through the QFX3008-I Interconnect devices. Models QFX5100-48S, QFX5100-48T, and QFX5100-24Q are supported as a QFX5100 Node device.

  - Two to eight 40-Gbps QSFP+ uplink ports on each QFX3600 or QFX5100 Node device connect to the data plane network through the QFX3008-I Interconnect devices.

    NOTE: On QFX3600 the four QSFP+ ports (Q0 through Q3 are configured as uplink ports by default.

  - Two Gigabit Ethernet RJ-45 or two SFP ports on each Node device provide connection to the control plane and management network through the Virtual Chassis.

    NOTE: All models of the QFX5100 have at least one RJ-45 port C0 and an SFP cage (C1). Some QFX5100 SKUs have an additional SFP cage. The SFP cages can be configured for either 1 GbE copper or fiber SFP transceivers. For details on the number of management ports on QFX5100 SKUs, see "QFX5100 Device Models" on page 72.

- QFX3008-I Interconnect devices—Two QFX3008-I Interconnect devices are required for a QFX3000-G QFabric system. Up to four QFX3008-I Interconnect devices can be used in a QFX3000-G QFabric sysem.

  - Up to 128 40-Gbps QSFP+ ports on each QFX3008-I Interconnect device connect the QFX3500 and QFX3600 Node devices to the data plane network across fiber-optic cables and a high-speed backplane.

  - Up to eight Gigabit Ethernet SFP+ interfaces (four per Control Board) connect each QFX3008-I Interconnect device to the control plane and management network through the Virtual Chassis.

Related Documentation

- QFX3000-G QFabric System Installation Overview on page 373

Understanding the Director Group

Because the Director group provides management services for the QFabric system, it is important to understand the components of the cluster and how the Director group supports the needs of the greater fabric.

- Director Group Components on page 12
- Director Group Services on page 12

Director Group Components

When you build a Director group, consider the following elements and concepts.

- **Director device**—A single management device for the QFabric system. Director devices with a hard drive provide full processing services and are used to build the Director group.
- **Director group**—A set of Director devices. The Director group is essential to the QFabric system, which cannot operate properly without it. The Director group shares and load-balances processing tasks for the QFabric system, performs topology discovery, assigns identifiers to QFabric system components, and manages interfabric communication. The primary devices in a Director group are Director devices that contain hard drives. The Director devices run dual processes in active or standby mode for maximum redundancy.

  When you add additional Director devices to the group, the Director group coordinates their activities and distributes processing loads across all available Director devices. The additional Director devices provide the Director group with additional memory and processing power. Supplementing the Director group with extra Director devices allows the group to scale efficiently and serve the needs of the entire QFabric system as it grows.

Director Group Services

The Director group is a management platform that establishes, monitors, and maintains all components in the QFabric system. It is a set of Director devices that run the Junos operating system (Junos OS) on top of a CentOS foundation. The Director group handles tasks such as QFabric system network topology discovery, Node and Interconnect device configuration and startup, and Domain Name System (DNS), Dynamic Host Configuration Protocol (DHCP), and Network File System (NFS) services. The Director group also runs the software for management applications, hosts and load-balances internal processes for the QFabric system, maintains configuration and topology databases, and starts additional QFabric system processes as requested.

Another critical role provided by the Director group is the hosting of the virtual Junos Routing Engines. These Routing Engines provide services for the QFabric system to keep it operating smoothly.

Related Documentation

- Performing the QFabric System Initial Setup on a QFX3100 Director Group on page 551
- Understanding Routing Engines in the QFabric System on page 13

Copyright © 2018, Juniper Networks, Inc.

- Understanding the QFabric System Hardware Architecture on page 7

Understanding Routing Engines in the QFabric System

Routing Engines perform many important processing tasks in the QFabric system. Knowing where the Routing Engines are located and what services they provide enables you to troubleshoot the QFabric system and ensure that it is running the way it should.

- Hardware-Based Routing Engines on page 13
- Software-Based External Routing Engines on page 13

Hardware-Based Routing Engines

A traditional Juniper Networks Routing Engine is a hardware field-replaceable unit that runs routing protocols, builds the routing and switching tables, sends routing information to the Packet Forwarding Engine, and handles several software processes for the device (such as interface control, chassis component monitoring, system management, and user access). Node devices that are part of server Node groups in the QFabric system that connect to servers or storage devices implement Routing Engine functions locally using this traditional hardware method.

Software-Based External Routing Engines

The QFabric system also uses external Routing Engines that run in software on the Director group. In contrast with traditional Routing Engines, the functions and processes provided by software-based Routing Engines are segmented, specialized, and distributed across multiple Routing Engine instances running on the Director group. Such separation provides redundancy for these functions and enables the QFabric system to scale. Figure 4 on page 13 shows the external Routing Engine types.

Figure 4: External Routing Engine Types

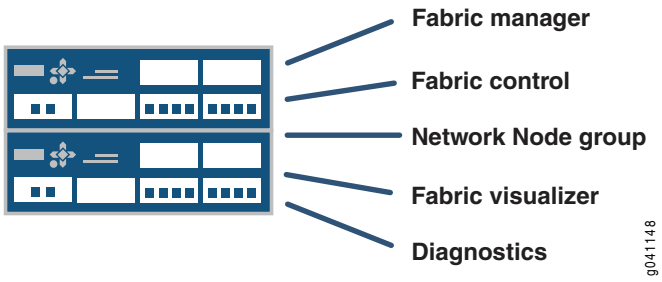

These special-purpose external Routing Engine instances running on the Director group provide the following major services for the QFabric system:

- **Fabric manager Routing Engine**—Provides services to all devices in the QFabric system, such as system initialization, topology discovery, internal IP address and ID assignment, and interdevice communication. The fabric manager Routing Engine authenticates Interconnect and Node devices, and maintains a database for system components. A single fabric manager Routing Engine instance is generated to manage the entire QFabric system.
- **Fabric control Routing Engine**—Runs the fabric control protocol to share route information between available devices in a partition. A pair of redundant route distribution Routing Engine instances is generated for every partition in the QFabric system, and both instances are active.
- **Diagnostic Routing Engine**—Gathers operational information that allows QFabric system administrators to monitor the health of the QFabric system. A single Routing Engine instance is generated for the entire QFabric system.
- **Network Node group Routing Engine**—Provides Routing Engine functionality for groups of Node devices bundled together as a single Layer 3 routing device, which is used to connect to external networks. A pair of redundant Routing Engine instances is generated for every network Node group in the QFabric system.

Related Documentation

- Understanding the Director Group on page 12
- *Understanding the QFabric System Control Plane*
- Understanding the QFabric System Hardware Architecture on page 7

Understanding Interconnect Devices

Interconnect devices in a QFabric system provide a way for the Node devices to connect with one another over a high-speed backplane. By understanding the role of Interconnect devices, you can harness the benefits of low latency, superb scalability, and minimum packet processing offered by a single-tier data center architecture.

- Interconnect Device Introduction on page 14
- QFX3008-I Interconnect Devices on page 15
- QFX3600-I Interconnect Devices on page 16
- QFX5100-24Q Interconnect Devices on page 17

Interconnect Device Introduction

Interconnect devices act as the primary fabric for data plane traffic traversing the QFabric system between Node devices. The main task for the Interconnect devices is to transfer traffic between the Node devices as quickly as possible across a high-speed, available path backplane. To reduce latency to a minimum, larger Interconnect devices (such as the QFX3008-I Interconnect device) implement multistage Clos switching to provide nonblocking connections between any of the Node devices in the system.

 Copyright © 2018, Juniper Networks, Inc.

Figure 5 on page 15 shows an example of how Clos switching works in the QFX3008-I Interconnect device.

Figure 5: Clos Switching for QFX3008-I Interconnect Devices

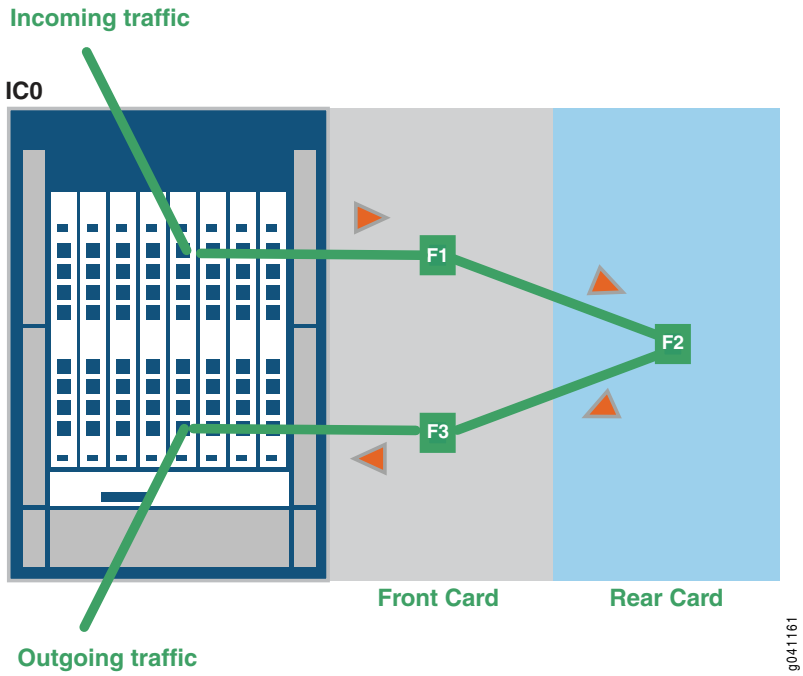

Traffic enters a QSFP+ port from a Node device, and an ingress chipset provides stage F1 processing. For the F2 stage, the frame is sent to a rear card and processed by a midplane chipset. Lastly, an egress chipset on the front card QSFP+ port handles processing tasks for the F3 stage. At each of the three Clos stages, a switching table chooses the best path and determines where to send the frame to reach the next stage. The F1 and F3 stages can be handled by the same front card or different front cards, depending on the best path selected by the fabric. After the frame traverses the Interconnect device backplane, the Interconnect device sends the frame to the egress Node device.

QFX3008-I Interconnect Devices

The QFX3008-I Interconnect device contains eight slots in the front of the chassis. In each slot, you can install a front card containing 16 40-Gbps quad small form-factor pluggable plus (QSFP+) ports. A fully configured system offers a total capacity of 128 QSFP+ connections. These front card ports attach to the high-speed backplane to reach the eight slots in the rear of the chassis, which provide the heavy-duty interconnections for the entire QFX3000-G QFabric system. In addition, four interfaces (two per Control Board) provide Gigabit Ethernet access to the control plane management network. Figure 6 on page 16 shows an example of the data plane and control plane connections for QFX3008-I Interconnect devices.

Copyright © 2018, Juniper Networks, Inc.

Figure 6: QFX3008-I Data Plane and Control Plane Connections

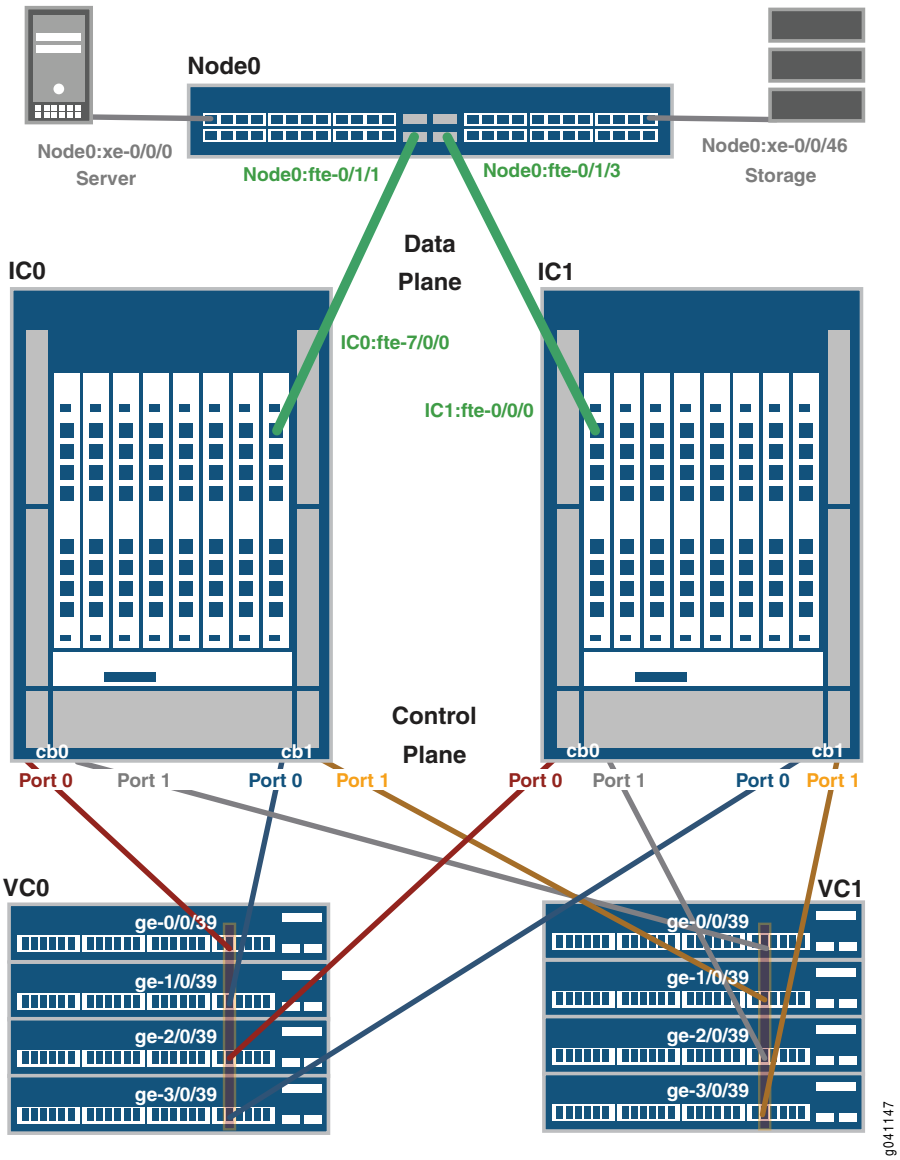

QFX3600-I Interconnect Devices

The QFX3600-I Interconnect device has 16 40-Gbps quad small form-factor pluggable plus (QSFP+) ports that provide interconnections for the entire QFX3000-M QFabric system. In addition, two management ports provide Gigabit Ethernet access to the control plane management network. Figure 7 on page 17 shows an example of the data plane and control plane connections for a QFX3600-I Interconnect device.

Copyright © 2018, Juniper Networks, Inc.

Figure 7: QFX3600-I Data Plane and Control Plane Connections

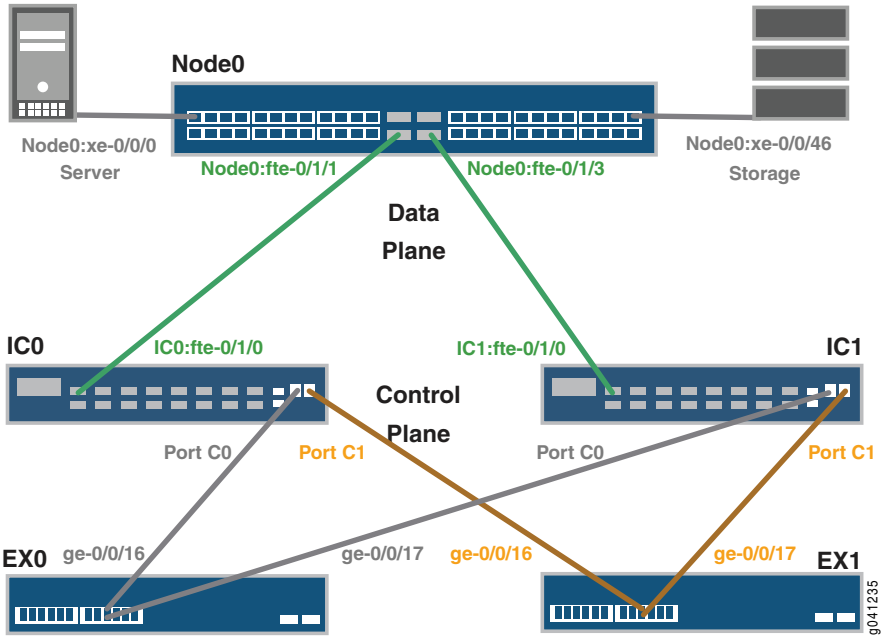

QFX5100-24Q Interconnect Devices

The QFX5100-24Q switch can be configured to operate either as an Interconnect device or as a Node device in a QFX3000-M QFabric system. The QFX5100-24Q has 24 40-Gbps QSFP+ ports and can hold an additional 8 40-Gbps QSFP+ ports. These QSFP+ ports provide interconnects for the entire QFabric system. QFX5100 devices have a minimum of two management ports: a 10/100/1000BASE-T RJ-45 port and a 1-Gbps SFP ports. If you plan to use all fiber connections, be sure to order the product SKUs have an additional 1-Gbps SFP port that can be used either for fiber or copper connections.

Figure 8: QFX5100-24Q Data Plane and Control Plane Connections

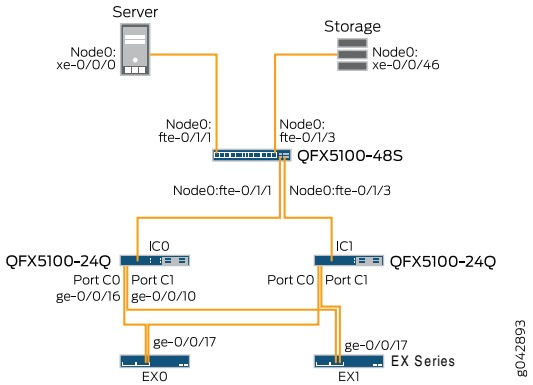

Related Documentation

- Understanding Node Devices on page 18
- *Understanding the QFabric System Data Plane*
- *Understanding the QFabric System Control Plane*
- Understanding the QFabric System Hardware Architecture on page 7

Understanding Node Devices

Node devices in a QFabric system provide a way for servers, storage devices, and external networks to connect to the QFabric system. By understanding the role of Node devices, you can design your QFabric system topology to take advantage of the unique benefits offered by a single-tier data center architecture.

- Node Device Introduction on page 18
- QFX3500 Node Devices on page 18
- QFX3600 Node Devices on page 19
- QFX5100 Node Devices on page 20

Node Device Introduction

A *Node device* in the QFabric system connects either endpoint systems (such as application servers and storage devices) or external networks to Interconnect devices. It can be used similarly to the way a top-of-rack switch is implemented in a data center. Node devices provide an access point to the QFabric system, allowing data to flow into and out of the QFabric system. Because all Node devices in the QFabric system connect through a backplane of Interconnect devices, in essence all Node devices are connected to one another. This directly connected design model eliminates multiple tiers of aggregation and core devices and provides minimum latency, maximum scalability, and rapid transport of server-to-server traffic and QFabric system-to-external network traffic.

Sets of Node devices can be bundled together into *Node groups*, in which each group operates as a single virtual entity. Node groups that connect to servers and storage devices are known as *server Node groups*, and Node groups that connect to external networks are known as *network Node groups*.

QFX3500 Node Devices

A QFX3500 Node device provides up to 48 10-Gigabit Ethernet interfaces to connect to endpoints or external networks. You can configure 12 of these 48 interfaces to support 2-Gbps, 4-Gbps, or 8-Gbps Fibre Channel. You can also configure the remaining 36 interfaces with Gigabit Ethernet.

NOTE: You can configure interface ports 0 through 47 as 10-Gigabit Ethernet ports, 0 through 5 and 42 through 47 as Fibre Channel over Ethernet ports, and 6 through 41 as Gigabit Ethernet ports. However, you cannot configure any Fibre Channel over Ethernet ports as Gigabit Ethernet ports or vice versa.

Copyright © 2018, Juniper Networks, Inc.

In addition to these server and network interfaces, there are four uplink interfaces to connect the QFX3500 Node device to Interconnect devices in a QFabric system. These uplinks use 40-Gbps quad small form-factor pluggable plus (QSFP+) interfaces.

The control plane requires two management ports on the QFX3500 chassis to connect the Node device to the control plane network. Figure 9 on page 19 shows an example of the data plane and control plane connections for a QFX3500 Node device.

Figure 9: QFX3500 Data Plane and Control Plane Connections

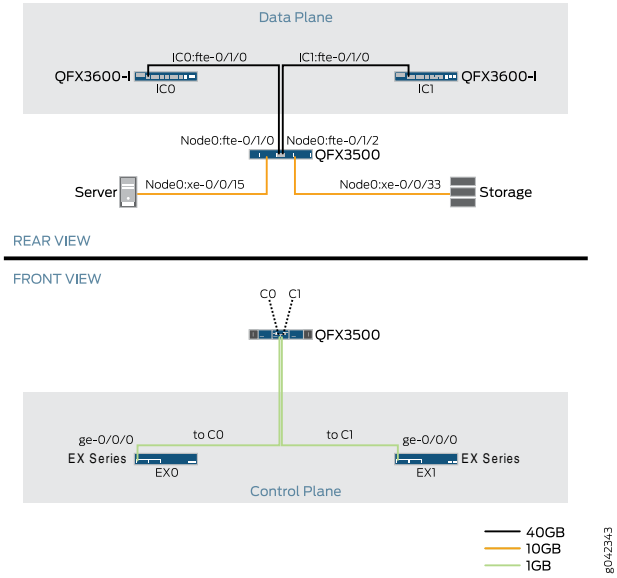

QFX3600 Node Devices

A QFX3600 Node device provides 16 40-Gbps QSFP+ interfaces. By default, 4 interfaces (labeled **Q0** through **Q3**) are configured for 40-Gbps uplink connections between your QFX3600 Node device and your Interconnect device, and 12 interfaces (labeled **Q4** through **Q15**) use QSFP+ direct-attach copper (DAC) breakout cables or QSFP+ transceivers with fiber breakout cables to support 48 10-Gigabit Ethernet interfaces for connections to either endpoint systems or external networks. Optionally, you can choose to configure the first eight interfaces (**Q0** through **Q7**) for uplink connections between your Node device and your Interconnect devices, and interfaces **Q2** through **Q15** for 10-Gigabit Ethernet or 40-Gigabit Ethernet connections to either endpoint systems or external networks.

The control plane requires two management ports on the QFX3600 chassis to connect the Node device to the control plane network. Figure 10 on page 20 shows an example of the data plane and control plane connections for a QFX3600 Node device.

Figure 10: QFX3600 Data Plane and Control Plane Connections

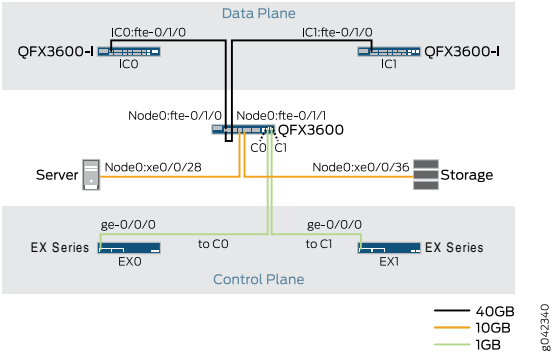

QFX5100 Node Devices

Three models of the QFX5100 line of switches are supported as Node devices on a QFabric system:

- QFX5100-48S
- QFX5100-48T
- QFX5100-24Q

Figure 11 on page 20 shows an example of the data plane and control plane connections for a QFX5100 Node device.

Figure 11: QFX5100 Data Plane and Control Plane Connections

- QFX5100-48S

  A QFX5100-48S Node device provides 48 10-Gigabit Ethernet interfaces to connect to endpoints or external networks and 6 40-Gbps QSFP+ interfaces. By default, 4 of

Copyright © 2018, Juniper Networks, Inc.

the QSFP+ interfaces (labeled **fte-0/1/0** through **fte-0/1/1**) are configured for 40-Gbps uplink connections between your Node device and your Interconnect devices, and 2 QSFP+ interfaces (labeled **xle-0/1/4** and **xle-0/1/5**) provide 40-Gigabit Ethernet connections to either endpoint systems (such as servers and storage devices) or external networks. Optionally, you can choose to configure the middle two interfaces (**xle-0/1/8** and **xle-0/1/15**) for10-Gigabit Ethernet or 40-Gigabit Ethernet connections to either endpoint systems or external networks, and you can choose to configure the last two interfaces (**fte-0/1/4** and **fte-0/1/5**) for uplink connections between your Node device and your Interconnect devices.

- QFX5100-48T

  A QFX5100-48T Node device provides 48 10GBASE-T interfaces to connect to endpoints or external networks and 6 40-Gbps QSFP+ interfaces.

  By default, 4 of the QSFP+ interfaces (labeled **fte-0/1/0** through **fte-0/1/3**) are configured for 40-Gbps uplink connections between your Node device and your Interconnect devices, and 2 QSFP+ interfaces (labeled **xle-0/1/4** and **xle-0/1/5**) provide 40-Gigabit Ethernet connections to either endpoint systems (such as servers and storage devices) or external networks. Optionally, you can choose to configure the middle two interfaces (**xle-0/1/8** and **xle-0/1/15**) for10-Gigabit Ethernet or 40-Gigabit Ethernet connections to either endpoint systems or external networks, and you can choose to configure the last two interfaces (**fte-0/1/4** and **fte-0/1/5**) for uplink connections between your Node device and your Interconnect devices.

- QFX5100-24Q

  A QFX5100-24Q Node device provides 24 QSFP+ interfaces **fte-0/1/0** through **fte-0/1/7**as uplinks and **xle-0/1/8** to **xle-0/1/23** as endpoint systems or external networks.

  The QFX5100-24Q has two expansion bays. With the optional QFX-EM-4Q expansion modules, the QFX5100-24Q can provide an additional 8 40-Gbps interfaces that are channelized into 10G ports. The QFX-EM-4Q expansion modules only support 40 Gigabit XLE interfaces. Valid interfaces are in the range of**xle-0/2/0** to **xle-0/2/3** for the first expansion module and from **xle-0/3/0**to **xle-0/3/3** in the second expansion module.

The control plane requires two management ports on the QFX5100 chassis to connect the Node device to the control plane network.

Related Documentation

- *Converting the Device Mode for a QFabric System Component*
- *Configuring Aliases for the QFabric System*
- *Configuring Node Groups for the QFabric System*
- Configuring the Port Type on QFX3600 Node Devices on page 714
- Understanding Node Groups on page 22
- Understanding Interconnect Devices on page 14
- *Understanding the QFabric System Data Plane*

- *Understanding the QFabric System Control Plane*
- Understanding the QFabric System Hardware Architecture on page 7

Understanding Node Groups

Node groups help you combine multiple Node devices into a single virtual entity within the QFabric system to enable redundancy and scalability at the edge of the data center.

- Network Node Groups on page 22
- Server Node Groups on page 22

Network Node Groups

A set of one or more Node devices that connect to an external network is called a *network Node group*. The network Node group also relies on two external Routing Engines running on the Director group. These redundant *network Node group Routing Engines* run the routing protocols required to support the connections from the network Node group to external networks.

When configured, the Node devices within a network Node group and the network Node group Routing Engines work together in tandem as a single entity. By default, network Node group Routing Engines are part of the **NW-NG-0** network Node group but no Node devices are included in the group. As a result, you must configure Node devices to be part of a network Node group.

In a QFabric system deployment that requires connectivity to external networks, you can modify the automatically generated network Node group by including its preset name **NW-NG-0** in the Node group configuration. Within a network Node group, you can include a minimum of one Node device up to a maximum of eight Node devices. By adding more Node devices to the group, you provide enhanced scalability and redundancy for your network Node group.

NOTE: The QFabric system creates a single **NW-NG-0** network Node group for the default partition. You cannot configure a second network Node group inside the default partition. The remaining Node devices within the default partition are reserved to connect to servers, storage, or other endpoints internal to the QFabric system. These Node devices either can be retained in the automatically generated server Node groups or can be configured as part of a redundant server Node group.

Server Node Groups

A *server Node group* is a set of one or more Node devices that connect to servers or storage devices. Unlike Node devices that are part of a network Node group and rely on an external Routing Engine, a Node device within a server Node group connects directly to endpoints and implements the Routing Engine functions locally, using the local CPU built into the Node device itself.

Copyright © 2018, Juniper Networks, Inc.

There are two different server Node group types:

- **Autogenerated server Node group**—By default, each Node device is placed in its own self-named Node group to connect to servers and storage. No configuration is necessary, but the QFabric system provides no redundancy for this type of Node group.
- **Redundant server Node group**—You can override the default, autogenerated server Node group assignment by manually configuring a *redundant server Node group* that contains a maximum of two Node devices. You can use a redundant server Node group to provide multihoming services to servers and storage, as well as configure aggregated LAG connections that span the two Node devices.

NOTE: The Node devices in a redundant server Node group must be of the same type, either two QFX3500 Node devices, two QFX3600 Node devices, or two QFX5100 Node devices. You cannot mix and match different Node device models in the same redundant server Node group.

Related Documentation

- *Configuring Node Groups for the QFabric System*
- Understanding Node Devices on page 18
- Understanding Routing Engines in the QFabric System on page 13
- Understanding the QFabric System Hardware Architecture on page 7

Copyright © 2018, Juniper Networks, Inc.

CHAPTER 2

QFX3100 Overview

- QFX3100 Director Device Overview on page 25
- Field-Replaceable Units in a QFX3100 Director Device on page 27
- Understanding Redundancy of QFX3100 Director Device Components and Functionality on page 28
- Chassis Physical Specifications for a QFX3100 Director Device on page 29
- Front Panel of a QFX3100 Director Device on page 30
- Rear Panel of a QFX3100 Director Device on page 30
- Cooling System and Airflow in a QFX3100 Director Device on page 31
- Network Modules in a QFX3100 Director Device on page 32
- HDD Modules in a QFX3100 Director Device on page 33
- Fan Modules in a QFX3100 Director Device on page 33
- AC Power Supply in a QFX3100 Director Device on page 34

QFX3100 Director Device Overview

The Juniper Networks QFX3100 Director device is used to manage the Juniper Networks QFX3000-G and QFX3000-M QFabric systems.

You connect Gigabit Ethernet ports on a QFX3100 Director device to Gigabit Ethernet ports on Juniper Networks EX4200 Ethernet switches to form the control plane and management network for the QFabric system. The EX4200 switches interconnect the Juniper Networks QFX3500, QFX3600, and QFX5100 Node devices, Juniper Networks QFX3008-I or QFX3600-I Interconnect devices, and QFX3100 Director devices.

A QFabric system requires two QFX3100 Director devices interconnected as a QFX3100 Director *group*. The second QFX3100 Director device provides redundancy for the control plane and management network.

- Software on page 26
- Physical Specifications on page 26
- Network Modules on page 26
- Hard Disk Drive Modules on page 27

- AC Power Supplies on page 27
- Fan Modules on page 27

Software

In a QFabric system, most Routing Engine tasks for all devices in the QFabric system run on the QFX3100 Director device. The internal Routing Engines on each device in the QFabric system continue to be responsible for functions local to their own devices, such as environmental monitoring, system loading, and power management. The internal Routing Engines communicate with the QFX3100 Director group through the control plane network.

Physical Specifications

The QFX3100 Director device is two rack units (2 U) in size and designed to fit in industry-standard 19-inch rack mount enclosures. See Figure 12 on page 26 and Figure 13 on page 26.

Figure 12: QFX3100 Director Device Front

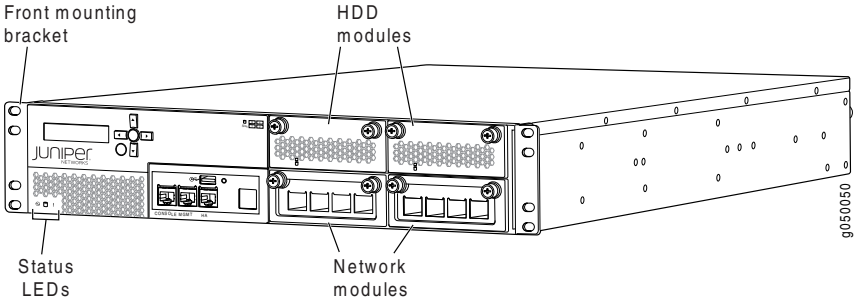

The QFX3100 Director device has an LCD panel that displays the device name.

Figure 13: QFX3100 Director Device Rear

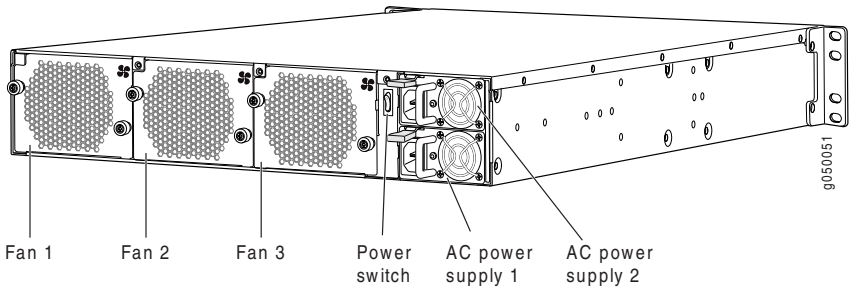

Network Modules

The QFX3100 Director device supports two network modules. Each network module contains four 1000BASE-T Gigabit Ethernet ports with RJ-45 connectors or four small form-factor pluggable (SFP) ports. The ports connect to the control plane and management network for the QFabric system. The ports on the network modules are also used to connect QFX3100 Director devices together to form a QFX3100 Director group.

Copyright © 2018, Juniper Networks, Inc.

Network modules are installed in the bottom module slots on the QFX3100 Director devices. All QFX3100 Director devices are shipped with two network modules. The network modules are field-replaceable but not hot-swappable. See "Installing a Network Module in a QFX3100 Director Device" on page 596.

Hard Disk Drive Modules

The QFX3100 Director device ships with two 2-terabyte (TB) hard disk drive (HDD) modules that provide storage for the Director device. The four HDD modules in the two QFX3100 Director devices participating in a Director group operate in a redundant array of independent disks (RAID) system to mirror data by synchronizing directories or files across the HDD modules.

HDD modules are installed in the upper module slots on the QFX3100 Director devices. All QFX3100 Director devices are shipped with two HDD modules. The HDD modules are field-replaceable and hot-swappable. See "Installing an HDD Module in a QFX3100 Director Device" on page 601.

AC Power Supplies

The QFX3100 Director device ships with redundant AC power supplies that provide power for the device. The power supply slots are located on the far right side of the rear panel of the QFX3100 Director device.

AC power supplies are field-replaceable and hot-swappable. See "Installing a Power Supply in a QFX3100 Director Device (includes video)" on page 589.

Fan Modules

The QFX3100 Director device ships with three fan modules. The fan modules provide cooling to the system and are installed in the fan module slots on the rear panel of the QFX3100 Director device.

Fan modules are field-replaceable and hot-swappable. See "Installing a Fan Module in a QFX3100 Director Device" on page 592.

Related Documentation

- Chassis Physical Specifications for a QFX3100 Director Device on page 29
- Network Modules in a QFX3100 Director Device on page 32
- AC Power Supply in a QFX3100 Director Device on page 34
- HDD Modules in a QFX3100 Director Device on page 33

Field-Replaceable Units in a QFX3100 Director Device

Field-replaceable units (FRUs) are components that you can replace at your site. The QFX3100 Director device FRUs except the network modules are hot-insertable and hot-removable: You can remove and replace them without powering off the device or disrupting the switching function of the QFabric system.

Copyright © 2018, Juniper Networks, Inc.

Table 4 on page 28 lists the FRUs for the QFX3100 Director device and actions to take before removing them.

Table 4: FRUs in a QFX3100 Director Device

FRU	Action to Take Before Removing the Component
Network modules	You must power off the QFX3100 Director device offline before replacing a network module. See "Removing a Network Module from a QFX3100 Director Device" on page 593.
Hard disk drive (HDD) modules	None.
Power supplies	None.
Fan modules	None.

NOTE: If you have a Juniper Networks J-Care service contract, register any addition, change, or upgrade of hardware components at https://www.juniper.net/customers/csc/management/updateinstallbase.jsp . Failure to do so can result in significant delays if you need replacement parts. This note does not apply if you replace existing components with the same type of component.

Related Documentation

- Installing and Removing QFX3100 Director Device Hardware Components on page 587

Understanding Redundancy of QFX3100 Director Device Components and Functionality

The QFX3100 Director device is designed to provide redundancy in platforms and components to minimize the possibility that a single point of failure can cause an entire QFabric system to fail.

Two QFX3100 Director devices are connected together in a QFX3100 Director group to provide control plane and management network redundancy for a QFabric system.

The hardware components of a single QFX3100 Director device are also designed for redundancy to minimize the possibility that a single point of failure causes a Director device to fail.

- QFX3100 Director Device Redundancy on page 28
- QFX3100 Director Device Component Redundancy on page 29

QFX3100 Director Device Redundancy

Two QFX3100 Director devices are connected together in a QFX3100 Director group to provide control plane and management network redundancy for a QFabric system. When one QFX3100 Director device fails, the second QFX3100 Director device in the QFX3100 Director group continues to operate with minimal network disruption.

 Copyright © 2018, Juniper Networks, Inc.

The HDD modules in the two QFX3100 Director devices operate in a redundant array of independent disks (RAID) system to synchronize directories or files across the two Director devices in a QFX3100 Director group. The QFX3100 Director devices are connected together through two ports on each Director device.

QFX3100 Director Device Component Redundancy

The following hardware components provide redundancy on a QFX3100 Director device:

- **Power supplies**—There are two power supplies in a QFX3100 Director device. Each power supply provides power to all components in the device. The two power supplies provide full power redundancy to the device. If one power supply fails or is removed, the second power supply balances the electrical load without interruption.
- **Cooling system**—There are three fan modules in a QFX3100 Director device. If a fan module fails and is unable to keep the QFX3100 Director device within the desired temperature limits, chassis alarms are triggered and the QFX3100 Director device may shut down.
- **Hard disk drive (HDD) modules**—There are two HDD modules in a QFX3100 Director device. The HDD modules are fully redundant storage units; each time a directory or file is stored on one HDD module, the same directory or file is stored on the other HDD module.

Related Documentation

- AC Power Supply in a QFX3100 Director Device on page 34
- Cooling System and Airflow in a QFX3100 Director Device on page 31
- HDD Modules in a QFX3100 Director Device on page 33

Chassis Physical Specifications for a QFX3100 Director Device

The QFX3100 Director device provides Routing Engine functionality for the QFabric system. Table 5 on page 29 summarizes the physical specifications of the QFX3100 Director device.

Table 5: Physical Specifications of the QFX3100 Director Device

Description	Value
Height	3.5 in. (8.9 cm)
Chassis width	17.26 in. (43.7 cm)
Chassis depth	23.5 in. (59.7 cm)
Weight	Chassis with FRUs installed: 41.2 lb (18.7 kg)

Related Documentation

- Cabinet Requirements for a QFX3100 Director Device on page 238
- Mounting a QFX3100 Director Device on Two Posts in a Rack or Cabinet on page 380

Copyright © 2018, Juniper Networks, Inc.

- Mounting a QFX3100 Director Device on Four Posts in a Rack or Cabinet on page 381
- Installing and Connecting a QFX3100 Director Device on page 377

Front Panel of a QFX3100 Director Device

The front panel of a QFX3100 Director device consists of the following components:

- Chassis LEDs—Power LED, Hard disk LED, and Alarm LED
- LCD panel
- Console port
- Management port
- USB port
- Four RJ-45 or SFP ports on each network module
- Gigabit Ethernet port LEDs
- Hard drive activity LED

Figure 14 on page 30 shows the front panel of a QFX3100 Director device.

Figure 14: QFX3100 Director Device Front Panel View

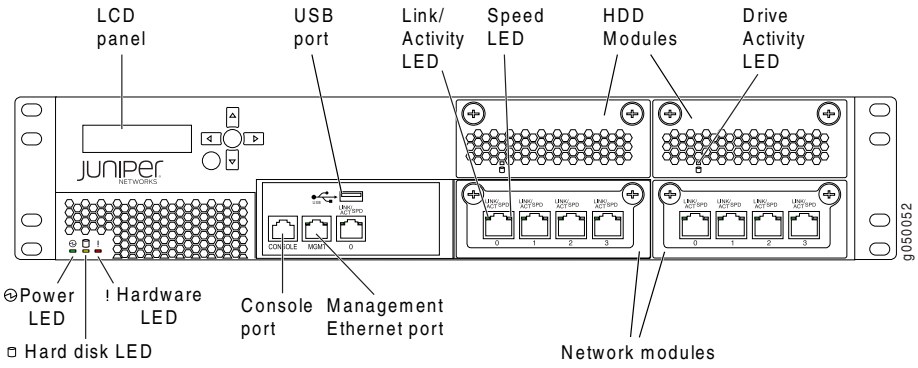

Related Documentation

- Rear Panel of a QFX3100 Director Device on page 30
- Chassis Status LEDs on a QFX3100 Director Device on page 721
- Network Module Port LEDs on a QFX3100 Director Device on page 723
- Management Port LEDs on a QFX3100 Director Device on page 722
- Installing and Removing QFX3100 Director Device Hardware Components on page 587

Rear Panel of a QFX3100 Director Device

The rear panel of a QFX3100 Director device consists of the following components:

- Fan modules

Copyright © 2018, Juniper Networks, Inc.

- Power switch
- Power supplies

Figure 15 on page 31 shows the rear panel of a QFX3100 Director device with dual AC power supplies.

Figure 15: QFX3100 Director Device Rear Panel View

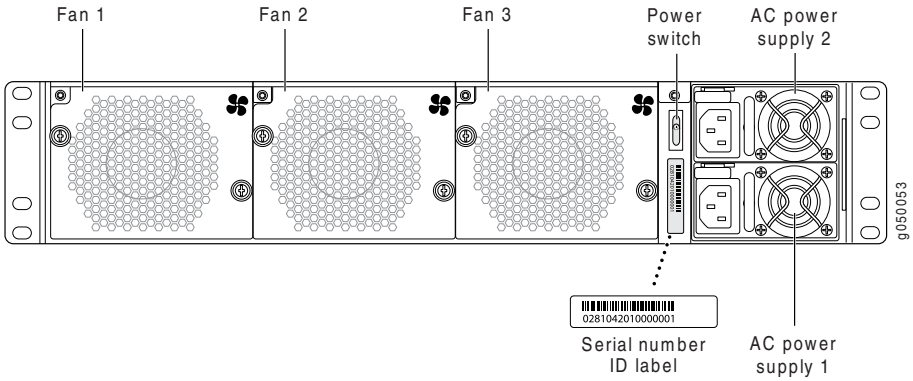

Related Documentation

- Front Panel of a QFX3100 Director Device on page 30
- Cooling System and Airflow in a QFX3100 Director Device on page 31
- AC Power Supply in a QFX3100 Director Device on page 34
- Installing and Removing QFX3100 Director Device Hardware Components on page 587

Cooling System and Airflow in a QFX3100 Director Device

The cooling system in a QFX3100 Director device consists of three fan modules as well as a single fan in each AC power supply. The fan modules are located in the fan module slots on the rear of the QFX3100 Director device.

The QFX3100 Director device provides front to back airflow. See Figure 16 on page 32.

Figure 16: Airflow Through the QFX3100 Director Device

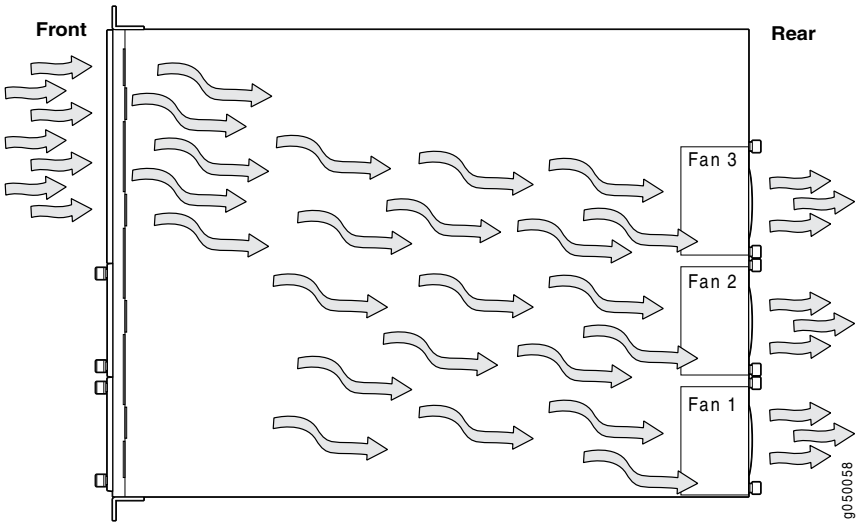

Temperature sensors in the chassis monitor the temperature within the chassis. The system raises an alarm if the fan fails or if the temperature inside the chassis rises above permitted levels. If the temperature inside the chassis rises above the threshold, the system shuts down automatically.

Related Documentation

- Installing a Fan Module in a QFX3100 Director Device on page 592
- Removing a Fan Module from a QFX3100 Director Device on page 590
- Rear Panel of a QFX3100 Director Device on page 30
- Prevention of Electrostatic Discharge Damage on page 360

Network Modules in a QFX3100 Director Device

The network module in a QFX3100 Director device (see Figure 17 on page 33) is a field-replaceable unit (FRU) that you install in one of the two bottom slots on the front panel. The QFX3100 Director device is shipped with two network modules. You must power down the QFX3100 Director device before replacing a network module.

There are two types of network modules:

- RJ-45 network module—Provides four 1000BASE-T RJ-45 ports. See "Cable Specifications for Copper-Based Control Plane Connections for the QFabric System" on page 265 for information about the required cables.
- SFP network module—Provides four 1-Gbps small form-factor pluggable (SFP) ports. See "Determining Transceiver Support for QFabric Systems" on page 258 for information about the supported transceivers and required cables.

Copyright © 2018, Juniper Networks, Inc.

Each network module provides four ports that connect the QFX3100 Director device to the QFabric system control plane and management network and connect two QFX3100 Director devices to form a QFX3100 Director group.

Figure 17 on page 33 shows the network module.

Figure 17: Network Module in a QFX3100 Director Device

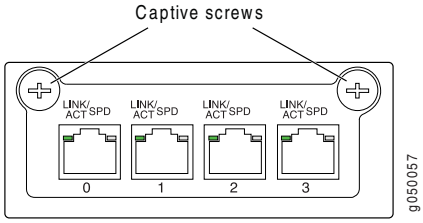

Related Documentation

- Installing a Network Module in a QFX3100 Director Device on page 596
- Network Module Port LEDs on a QFX3100 Director Device on page 723

HDD Modules in a QFX3100 Director Device

The two 2-terabyte (TB) hard disk drive (HDD) modules in each QFX3100 Director device provide storage for the Director device and the QFabric System. The four HDD modules in the two QFX3100 Director devices participating in a Director group operate in a redundant array of independent disks (RAID) system to synchronize directories or files across the HDD modules.

Each HDD module can be installed in one of the two top slots on the front panel of the QFX3100 Director device. The QFX3100 Director device is shipped with two HDD modules.

HDD modules are field-replaceable units (FRUs).

Related Documentation

- Installing an HDD Module in a QFX3100 Director Device on page 601

Fan Modules in a QFX3100 Director Device

Fan modules provide cooling to a QFX3100 Director device. All QFX3100 Director devices are shipped with three fan modules installed in the fan module slots on the rear panel of the chassis. See Figure 18 on page 34.

Copyright © 2018, Juniper Networks, Inc.

Figure 18: Fan Module

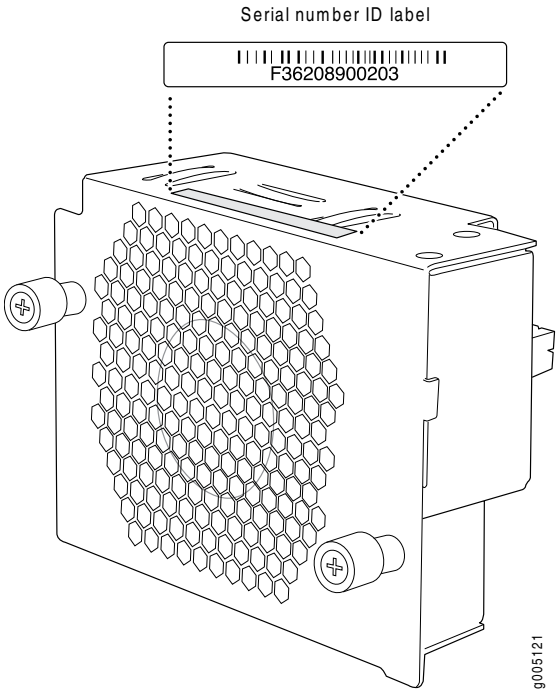

A QFX3100 Director device can operate for a short time with a fan module removed; however, the chassis might shut down when the high temperature threshold is exceeded if a fan module is not available to cool the QFX3100 Director device properly.

Fan modules are hot-swappable and field-replaceable units (FRUs).

Related Documentation

- Cooling System and Airflow in a QFX3100 Director Device on page 31
- Installing a Fan Module in a QFX3100 Director Device on page 592

AC Power Supply in a QFX3100 Director Device

The AC power supply in a QFX3100 Director Device is a hot-insertable and hot-removable field-replaceable unit (FRU).

You can install up to two AC power supplies in a QFX3100 Director device. Power supplies are installed in the power supply slots on the back of the chassis. All QFX3100 Director devices are shipped with two AC power supplies.

Each AC power supply weighs approximately 2.5 lb (1.1 kg). See Figure 19 on page 35.

Copyright © 2018, Juniper Networks, Inc.

Figure 19: AC Power Supplies

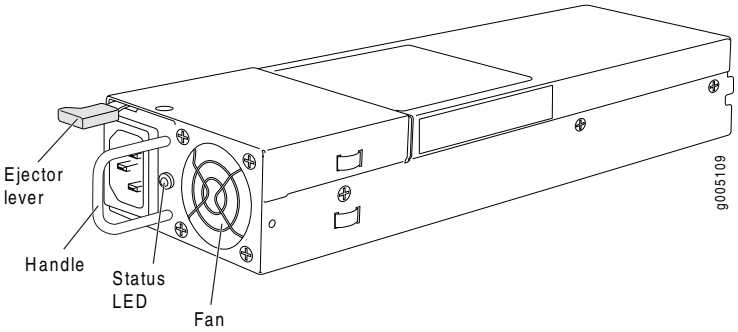

Each power supply has its own fan and is cooled by its own internal cooling system. Hot air exhausts from the rear of the chassis.

A QFX3100 Director device supports two 560-W AC power supplies.

Related Documentation

- Installing a Power Supply in a QFX3100 Director Device (includes video) on page 589
- AC Power Specifications for a QFX3100 Director Device on page 277
- AC Power Supply LED on a QFX3100 Director Device on page 724

Copyright © 2018, Juniper Networks, Inc.

CHAPTER 3

QFX3008-I Overview

- QFX3008-I Interconnect Device Overview on page 37
- Field-Replaceable Units in a QFX3008-I Interconnect Device on page 42
- Understanding Redundancy of QFX3008-I Interconnect Device Components and Functionality on page 43
- Slot Numbering for a QFX3008-I Interconnect Device on page 44
- Chassis Physical Specifications for a QFX3008-I Interconnect Device on page 45
- Midplane in a QFX3008-I Interconnect Device on page 46
- Front Panel Display of the QFX3008-I Interconnect Device on page 47
- Cooling System and Airflow in a QFX3008-I Interconnect Device on page 48
- 16-Port QSFP+ Front Cards in a QFX3008-I Interconnect Device on page 52
- Control Board in a QFX3008-I Interconnect Device on page 53
- Rear Cards in a QFX3008-I Interconnect Device on page 55
- AC Power Supply in a QFX3008-I Interconnect Device on page 56
- Wiring Tray in a QFX3008-I Interconnect Device on page 58
- Grounding Cable and Lug Specifications for a QFX3008-I Interconnect Device on page 61

QFX3008-I Interconnect Device Overview

The QFX3008-I Interconnect device is a half-rack, modular, fully redundant chassis that provides the data plane switch fabric for Juniper Networks QFX3500, QFX3600, and QFX5100 Node devices. Together the Node device and the QFX3008-I Interconnect device form a multistage, nonblocking switch fabric that provides a high-performance, low-latency, unified interconnect solution for next-generation data centers. See *Understanding the QFabric System Data Plane*.

The Node devices and QFX3008-I Interconnect Devices are connected to Juniper Networks QFX3100 Director devices in an out-of-band management network through Juniper Networks EX4200 Ethernet Switches. The QFX3100 Director devices present the QFabric system devices as a single network entity, which enables simplified management of your

data center using the Junos OS command-line interface (CLI) or Junos Space. See *Understanding the QFabric System Control Plane*.

- Software on page 38
- Chassis Physical Specifications, Front Panel Display, and Midplane on page 38
- 16-Port QSFP+ Front Card on page 40
- Control Board on page 41
- Rear Card on page 41
- Cooling System on page 41
- Power Supplies and Wiring Trays on page 41

Software

QFX Series devices run under the Juniper Networks Junos OS, which provides Layer 2 and Layer 3 switching, routing, and security services. The same Junos OS code base that runs on QFX Series devices also runs on all Juniper Networks EX Series switches, and J Series, M Series, MX Series, and T Series routers.

Chassis Physical Specifications, Front Panel Display, and Midplane

The QFX3008-I Interconnect device is 21 rack units (21 U) in size (1/2 rack) and designed to fit in industry-standard 19-inch rack-mount enclosures. See Figure 20 on page 39, Figure 21 on page 40, and "Chassis Physical Specifications for a QFX3008-I Interconnect Device" on page 45.

Copyright © 2018, Juniper Networks, Inc.

Figure 20: QFX3008-I Interconnect Device Front

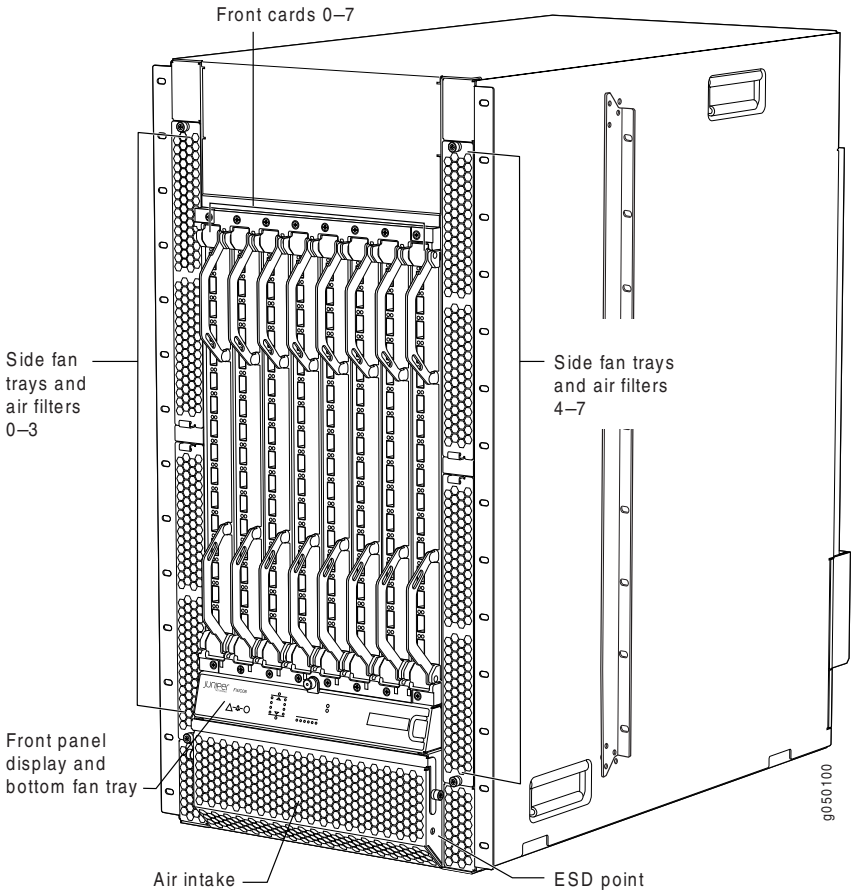

Figure 21: QFX3008-I Interconnect Device Rear

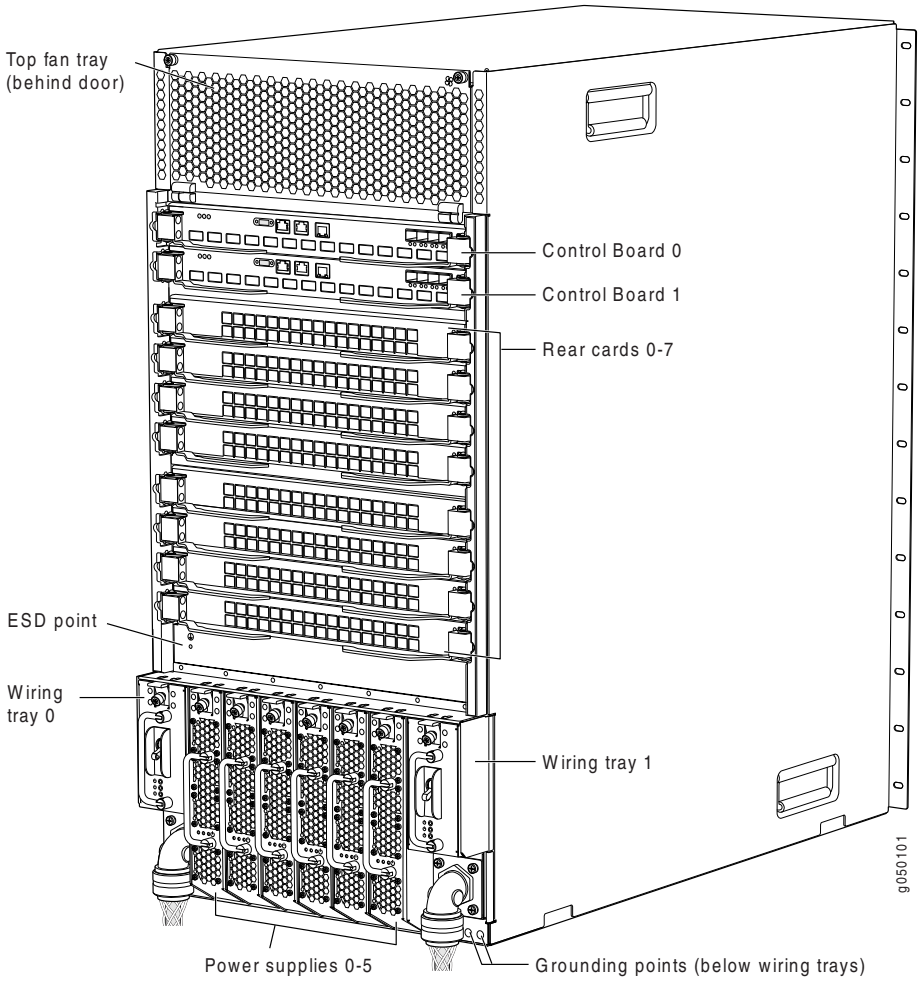

The QFX3008-I Interconnect device has a front panel display that displays chassis components' alarm information for rapid problem identification. See "Front Panel Display of the QFX3008-I Interconnect Device" on page 47.

The QFX3008-I Interconnect device midplane distributes the data, control, and management signals to system components and distributes power throughout the system. See "Midplane in a QFX3008-I Interconnect Device" on page 46.

16-Port QSFP+ Front Card

The 16-port quad small form-factor pluggable plus (QSFP+) front cards act as one stage in the multistage switch fabric data plane in the QFX3000 QFabric system. The front cards are hot-insertable and hot-removable field-replaceable units (FRUs). Up to eight front cards are installed in the front of the chassis in the slots labeled **0** through **7**. See "16-Port QSFP+ Front Cards in a QFX3008-I Interconnect Device" on page 52 and "Understanding the QFabric System Hardware Architecture" on page 7.

Copyright © 2018, Juniper Networks, Inc.

Control Board

The QFX3008-I Interconnect device is connected to the QFabric system control plane through four Gigabit Ethernet small form-factor pluggable plus (SFP+) interfaces on each Control Board. The Control Boards are hot-insertable and hot-removable field-replaceable units (FRUs) that are installed in the rear of the chassis in the slots labeled **CB 0** and **CB 1**. See "Control Board in a QFX3008-I Interconnect Device" on page 53.

Rear Card

The rear cards act as one stage in the multistage switch fabric data plane in the QFabric system. The rear cards are hot-insertable and hot-removable field-replaceable units (FRUs). Eight rear cards are installed in the rear of the chassis in the slots labeled **0** through **7**. In a QFX3008-I Interconnect Device, all eight rear cards are active and must be installed in the switch for normal operation. If a single rear card fails, the input/output traffic for that card is load-balanced among the remaining rear cards to provide graceful degradation in switching performance. The impact of a rear card failure on the performance of a QFX3008-I Interconnect device varies based on the number of Node devices installed in the QFabric system and the traffic mix flowing through them. See "Rear Cards in a QFX3008-I Interconnect Device" on page 55 and "Understanding the QFabric System Hardware Architecture" on page 7.

Cooling System

The cooling system in a QFX3008-I Interconnect device consists of ten hot-insertable and hot-removable field-replaceable unit (FRU) fan trays: a front fan tray, a rear fan tray, and eight side fan trays. The side fan trays are identical and interchangeable. There are field-replaceable filters on each side fan tray, and below the front fan tray. See "Cooling System and Airflow in a QFX3008-I Interconnect Device" on page 48.

Power Supplies and Wiring Trays

Power supplies for the QFX3008-I Interconnect device are fully redundant, load-sharing, and hot-insertable and hot-removable field-replaceable units (FRUs). Each QFX3008-I Interconnect device holds six power supplies. See "AC Power Supply in a QFX3008-I Interconnect Device" on page 56.

Wiring trays distribute the input power to the power supplies. Wiring trays for the QFX3008-I Interconnect device are fully redundant, hot-insertable and hot-removable field-replaceable units (FRUs). Each QFX3008-I Interconnect device holds two wiring trays. See "Wiring Tray in a QFX3008-I Interconnect Device" on page 58.

CAUTION: **Mixing different types of wiring trays in the same chassis is not a supported configuration.**

Related Documentation

- Understanding Redundancy of QFX3008-I Interconnect Device Components and Functionality on page 43

- Field-Replaceable Units in a QFX3008-I Interconnect Device on page 42
- Slot Numbering for a QFX3008-I Interconnect Device on page 44

Field-Replaceable Units in a QFX3008-I Interconnect Device

Field-replaceable units (FRUs) are device components that you can replace at your site. The QFX3008-I Interconnect device FRUs except the master Control Board are hot-insertable and hot-removable: you can remove and replace them without powering off the device or disrupting the switching function.

NOTE: To prevent data loss on the Interconnect cards, we recommend that you follow the procedures to offline and power off the cards before removing them from the device. See Table 6 on page 42 for details.

Table 6 on page 42 lists the FRUs for the QFX3008-I Interconnect device and actions to take before removing them.

Table 6: FRUs in a QFX3008-I Interconnect Device

FRU	Action to Take Before Removing the Component
Power supplies	None.
Wiring trays	None.
Fan trays	None.
Air filters	None.
16-port QSFP+ front card	To avoid packet loss you must take the front card offline before removing it. See "Taking a 16-Port QSFP+ Front Card Offline in a QFX3008-I Interconnect Device" on page 633.
Control Boards	• Master Control Board—We recommend that you switch mastership to the backup Control Board, and then take the Control Board offline before removing it. Traffic through the QFX3008-I Interconnect device will be disrupted while the backup Control Board assumes mastership. See "Taking a Control Board Offline in a QFX3008-I Interconnect Device" on page 627. • Backup Control Board—We recommend that you take the backup Control Board offline before removing it. See "Taking a Control Board Offline in a QFX3008-I Interconnect Device" on page 627.
Rear card	To avoid packet loss you must take the rear card offline before removing it. See "Taking the Rear Card Offline in a QFX3008-I Interconnect Device" on page 638.
Optical transceivers	None. We recommend that you disable the interface using the **set interfaces *interface-name* disable** command. See "Disconnecting a Fiber-Optic Cable from a QFX Series Device" on page 711.

Copyright © 2018, Juniper Networks, Inc.

NOTE: If you have a Juniper J-Care service contract, register any addition, change, or upgrade of hardware components at https://www.juniper.net/customers/csc/management/updateinstallbase.jsp . Failure to do so can result in significant delays if you need replacement parts. This note does not apply if you replace existing components with the same type of component.

Related Documentation

- Installing and Removing QFX3008-I Interconnect Device Hardware Components on page 604

Understanding Redundancy of QFX3008-I Interconnect Device Components and Functionality

The QFX3008-I Interconnect device is a fully redundant system. A redundant QFX3008-I Interconnect device configuration is designed so that no single point of failure can cause the entire device to fail.

The following hardware components provide redundancy for a QFX3008-I Interconnect device:

- Control Boards—A QFX3008-I Interconnect device has two Control Boards. One Control Board functions as the master, and the other functions as the backup. If the master Control Board fails or is removed, the backup Control Board takes over as the master Control Board. In a QFX3000 QFabric system deployment with multiple QFX3008-I Interconnect devices, traffic halts on the QFX3008-I Interconnect device with a failed Control Board. It resumes once the backup Control Board takes over as the master Control Board. Traffic on other QFX3008-I Interconnect devices continues to be switched normally.
- Rear cards—The switch fabric circuitry in a QFX3008-I Interconnect device is distributed across eight rear cards. All eight rear cards must be installed in a QFX3008-I Interconnect Device.

  All rear fabric cards are fully connected to all installed 16-port QSFP+ front cards. When the device is operational, all eight rear cards are simultaneously active. If a single rear fabric card fails, the input/output traffic for that card is load-balanced among the remaining rear fabric cards to provide graceful degradation in midplane performance. The impact of a rear fabric card failure on the performance of a QFX3008-I Interconnect device varies based on the traffic mix flowing through the QFX3008-I Interconnect Device.
- Cooling system—The cooling system in a QFX3008-I Interconnect device consists of ten fan trays. There are eight side fan trays, a front fan tray, and a rear fan tray. Each fan tray has multiple fans. Two fan controllers control the fan trays; each fan controller controls a different set of fan trays. If one fan controller fails, the second fan controller keeps the remaining fan trays working. This allows the device to continue to operate normally.

Copyright © 2018, Juniper Networks, Inc.

Additionally, each fan tray continues to operate indefinitely and provide sufficient cooling even when a fan on the fan tray fails, provided the room temperature is within the operating range. See "Cooling System and Airflow in a QFX3008-I Interconnect Device" on page 48.

- Power supplies and wiring trays—There are six power supplies and two wiring trays in a QFX3008-I Interconnect device. Each wiring tray provides input power to three power supplies. Each power supply connects to the midplane of the chassis, which distributes the output power produced by the power supplies to different chassis components. (See "Midplane in a QFX3008-I Interconnect Device" on page 46.) Each power supply provides power to a subset of components on the chassis. Together, one wiring tray and set of three power supplies can provide power to the entire system indefinitely. If one power supply fails or is removed, a power supply from the second set of power supplies that powers the same components continues to provide power to those components without interruption. The redundant wiring trays provide 1+1 power feed redundancy for the chassis. The two sets of three redundant power supplies provide 2N system power distribution redundancy for the chassis. See "AC Power Supply in a QFX3008-I Interconnect Device" on page 56 and "Wiring Tray in a QFX3008-I Interconnect Device" on page 58.

Related Documentation

- Control Board in a QFX3008-I Interconnect Device on page 53
- Rear Cards in a QFX3008-I Interconnect Device on page 55

Slot Numbering for a QFX3008-I Interconnect Device

The QFX3008-I Interconnect device accepts eight 16-port QSFP+ front cards, two Control Boards, eight rear cards, ten fan trays, six power supplies, and two wiring trays.

The slots on the chassis are numbered, and except for the cooling system, labels on the chassis describe the slot numbers:

- Front card slots—All eight slots for the front cards run vertically across the front of the chassis. The label for the front cards is at the bottom of the card cage on the front of the chassis, above the front panel display. The front card slots are labeled **0** through **7**. In the command-line interface (CLI), the front cards are described as **fpc 0** through **fpc 7**.
- Control Board slots—The two slots for the Control Boards run horizontally on the rear of the chassis. The label for the Control Board slots and the rear card slots is attached to the rear of the chassis along the right side. The Control Board slots are labeled **CB 0** and **CB 1**.
- Rear card slots—All eight slots for the rear cards run horizontally in the rear of the chassis directly below the Control Board slots. The label for the Control Board slots and the rear card slots is attached to the rear of the chassis along the right side. The rear card slots are labeled **0** through **7** on the chassis. In the CLI, the rear card slots are described as **fpc 8** through **fpc 15**.
- Cooling system—Eight side fan tray slots run vertically on the sides of the front of the chassis; four on one side of the chassis behind two identical access panels, four on the

 Copyright © 2018, Juniper Networks, Inc.

other side of the chassis behind two identical access panels. Each side fan tray has an air filter installed on it. The front fan tray and front panel display is installed at the bottom front of the chassis. The front air filter is installed directly below the front fan tray and front panel display, behind a hinged door. The rear fan tray is installed behind a hinged door at the top rear of the chassis. The fan tray and air filter slots are not numbered on the chassis.

- Power supply slots and wiring tray slots—The six power supply slots run vertically across the bottom rear of the chassis. The two wiring trays are installed on either side of the power supplies at the bottom rear of the chassis. The label for the power supplies and wiring trays is attached to the rear of the chassis directly above the power supplies and wiring trays. The power supply slots are labeled **0** through **5**. The wiring tray slots are labeled **Wiring Tray 0** and **Wiring Tray 1**.

Related Documentation

- Installing and Removing QFX3008-I Interconnect Device Hardware Components on page 604
- QFX3008-I Interconnect Device Overview on page 37

Chassis Physical Specifications for a QFX3008-I Interconnect Device

The QFX3008-I Interconnect device is a rigid sheet-metal structure that houses the other switch components. Table 7 on page 45 summarizes the physical specifications of the QFX3008-I Interconnect device.

Table 7: Physical Specifications of a QFX3008-I Interconnect Device

Description	Value
Chassis height	36.65 in. (93.09 cm)
Chassis width	• 17.3 in. (43.9 cm) excluding mounting bracket width • 19.0 in. (48.3 cm) including mounting bracket width
Chassis depth	• Minimum depth required for installation is 39.52 in. (100.38 cm) • Chassis depth without any field-replaceable units (FRUs) installed is 32.38 in. (82.25 cm) • Chassis depth from front-mounting brackets to rear of chassis is 35.10 in. (89.15 cm) • Chassis depth from mid-mounting brackets to rear of chassis is 23.73 in. (60.27 cm) • Maximum chassis depth with FRUs, including the optional cable manager and lockable front doors installed, is 40.37 in. (102.54 cm)

Copyright © 2018, Juniper Networks, Inc.

Table 7: Physical Specifications of a QFX3008-I Interconnect Device (continued)

Description	Value
Weight	• Chassis with midplane: Approximately 205 lb (93 kg) • Chassis with all FRUs: Approximately 650 lb (295 kg) NOTE: This represents the weight of the chassis including all required and optional FRUs. This does not include optical transceivers and cabling. • 16-port QSFP+ front card: 18.3 lb (8.3 kg) • Control Board: 8.4 lb (3.8 kg) • Rear card: 10.0 lb (4.5 kg) • Side fan tray: 2.7 lb (1.2 kg) • Front fan tray and front panel display: 16.7 lb (7.6 kg) • Rear fan tray: 19.4 lb (8.8 kg) • Power supply: 11.2 lb (5.1 kg) • Wiring tray: 8.0 lb (3.6 kg)

Related Documentation

- Rack Requirements for a QFX3008-I Interconnect Device on page 231
- Cabinet Requirements for a QFX3008-I Interconnect Device on page 239
- Installing and Connecting a QFX3008-I Interconnect Device on page 389

Midplane in a QFX3008-I Interconnect Device

The midplane is located in the center of the chassis and forms the rear of the front card cage. The side fan trays, front fan tray and front panel display, and 16-port QSFP+ front cards plug into the midplane from the front of the chassis. The rear fan tray, Control Boards, rear cards, power supplies, and wiring trays plug into the midplane from the rear of the chassis. The midplane contains an EEPROM that stores the serial number and revision level of the midplane.

The midplane performs the following functions:

- Power distribution—The midplane distributes power to all the device components from the power supplies that plug into it.
- Control-signal connectivity—The midplane transports the control signals exchanged by system components for monitoring, control, and management purposes.
- Transfer of data between 16-port QSFP+ front cards and rear cards—The midplane provides connectivity for data traffic to and from the front cards and the rear cards.

WARNING: **High levels of electrical energy are distributed across the device midplane. Do not touch the midplane connectors or any component connected to the midplane with any metallic object while you are servicing components installed in the device.**

Copyright © 2018, Juniper Networks, Inc.

Related Documentation

- Field-Replaceable Units in a QFX3008-I Interconnect Device on page 42
- QFX3008-I Interconnect Device Overview on page 37

Front Panel Display of the QFX3008-I Interconnect Device

The front panel display of the QFX3008-I Interconnect device consists of the following components:

- Alarm LEDs—Indicate major or minor alarms. See "Chassis Status LEDs on a QFX3008-I Interconnect Device" on page 727 and "Understanding Alarms" on page 897.
- Status LEDs—Indicate system status. See "Chassis Status LEDs on a QFX3008-I Interconnect Device" on page 727.
- LCD panel—The LCD panel displays the device hostname and the number of active alarms.

Figure 22 on page 47 shows the front panel display of a QFX3008-I Interconnect device. Figure 23 on page 48 shows the location of the front panel display on the chassis.

Figure 22: Chassis Status LEDs

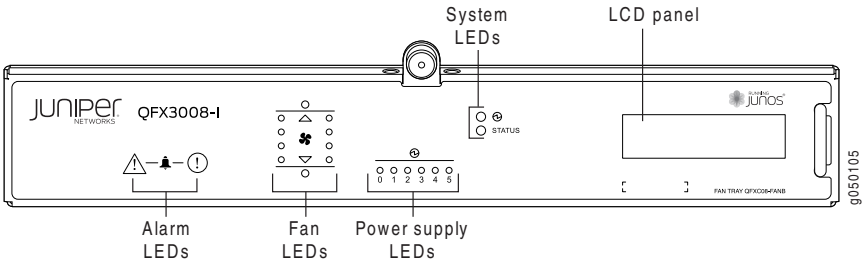

Figure 23: QFX3008-I Interconnect Device Front

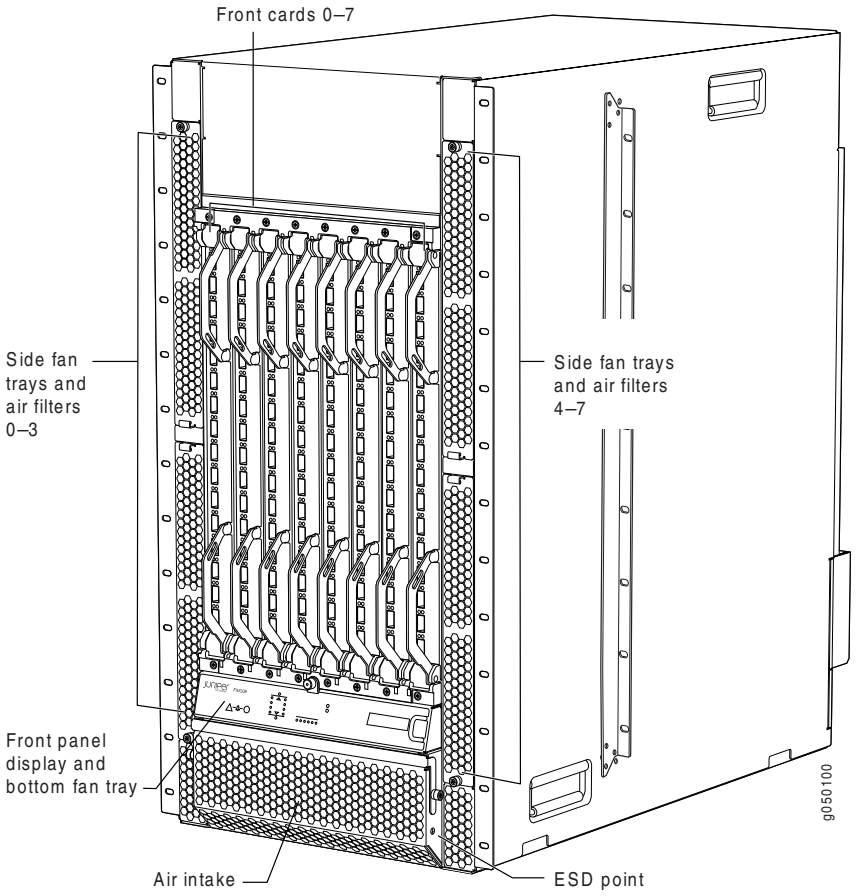

Related Documentation

- Field-Replaceable Units in a QFX3008-I Interconnect Device on page 42

Cooling System and Airflow in a QFX3008-I Interconnect Device

The cooling system in a QFX3008-I Interconnect device consists of ten fan trays and nine air filters. The fan trays and air filters are hot-insertable and hot-removable field-replaceable units (FRUs).

Eight fan trays install vertically on the front sides of the chassis, one fan tray installs directly below the front card cage, and one in the rear of the chassis at the top. See Figure 24 on page 49 and Figure 25 on page 50.

Copyright © 2018, Juniper Networks, Inc.

Figure 24: Location of Bottom and Side Fan Trays

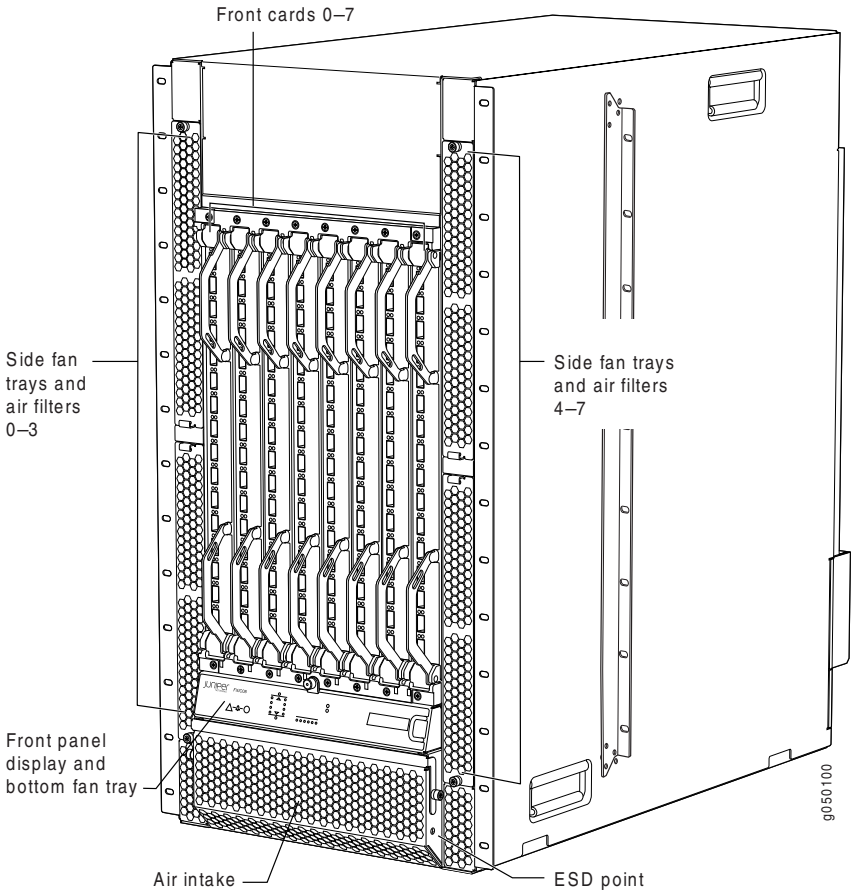

Figure 25: Location of Top Fan Tray

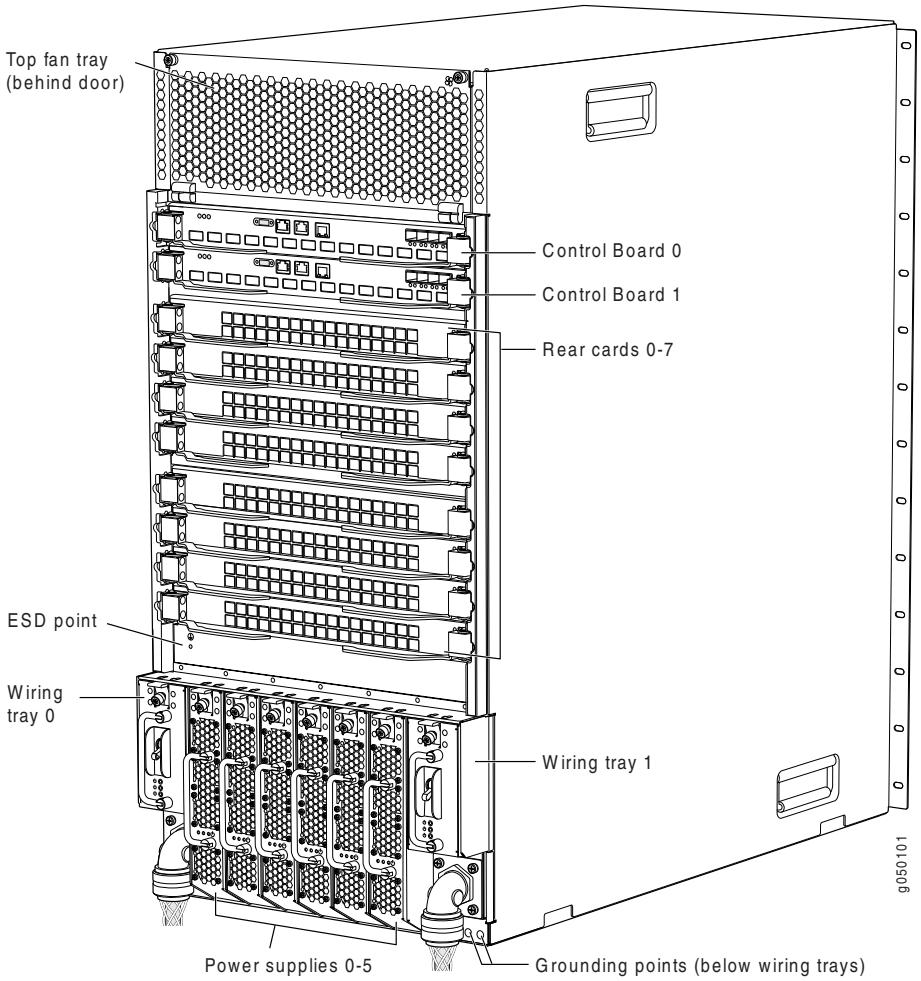

The chassis continues to operate for a limited time (2 minutes) after a fan tray has been removed.

CAUTION: **You must replace a fan tray within 2 minutes of removing it.**

The chassis has front-to-back airflow. The air intake to cool the front card cage and power supplies is located on the front bottom of the chassis. Cool air is pulled into the chassis and is pushed through the front card cage toward the rear fan tray. Hot air exhausts from the upper rear of the chassis. See the side view in Figure 26 on page 51 for this airflow.

The same air intake directs cool air to the power supplies and wiring trays. The hot air passes through the power supplies and wiring trays and exhausts on the rear of the chassis at the bottom. See the side view in Figure 26 on page 51 for this airflow.

Copyright © 2018, Juniper Networks, Inc.

Figure 26: Airflow Through the Front Card Cage and Powerhouse

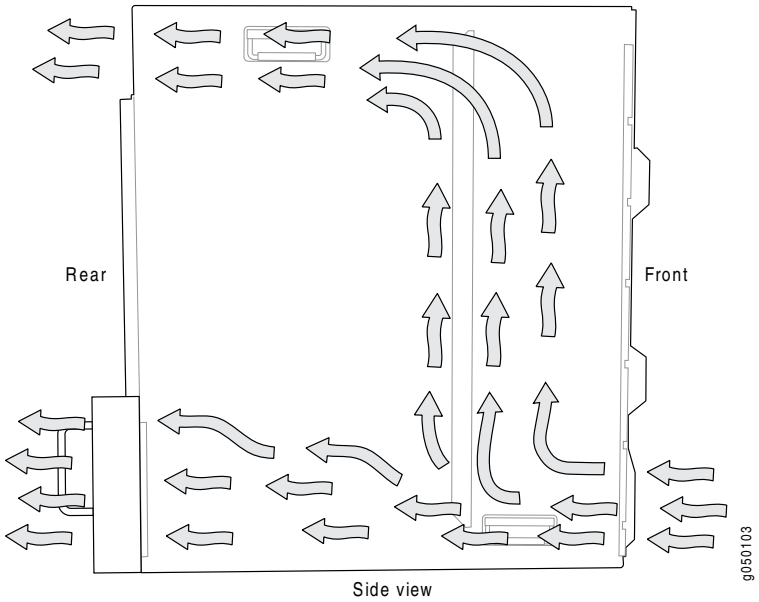

Cooling for the rear card cage is also front to back. The air intake to cool the rear card cage is located on the front sides of the chassis. Cool air is pulled in through the side fan trays. The hot air exhausts through the rear card cage. See Figure 27 on page 51 for this airflow.

Figure 27: Airflow Through the Rear Card Cage

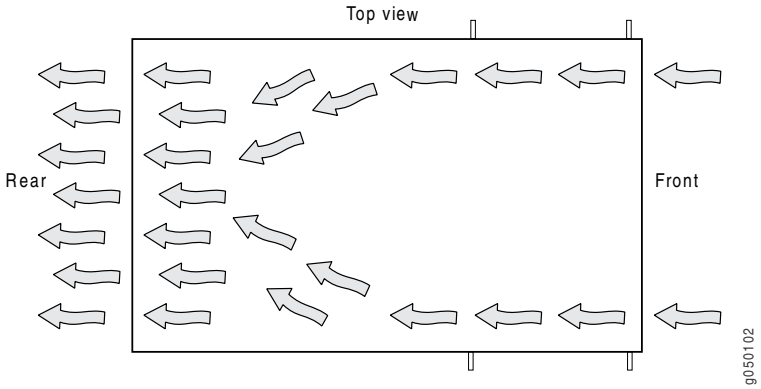

NOTE: **Do not block the air intake at the bottom front of the chassis, or the side fan trays.**

The Control Board monitors the temperature of device components. Under normal operating conditions, the fans in the fan trays run at less than full speed.

If the chassis temperature rises above the acceptable threshold the speed of the working fans is automatically adjusted to keep the temperature within the acceptable range. If

the ambient maximum temperature specification (104° F or 40° C) is exceeded and the system cannot be adequately cooled, the device shuts down within 4 minutes of the alarm being generated if the problem is not fixed.

The fan trays continue to operate indefinitely and provide sufficient cooling even when a single fan fails, provided the room temperature is within the operating range. You can check the status of the fan trays on the front panel display. See "Chassis Status LEDs on a QFX3008-I Interconnect Device" on page 727.

You cannot replace a single fan in a fan tray. If one or more fans fail, you must replace the entire fan tray.

WARNING: **There is no fan guard on the fans. Be careful to keep your fingers clear of moving fan blades when you are removing the fan trays.**

Related Documentation

- Field-Replaceable Units in a QFX3008-I Interconnect Device on page 42
- Installing a Bottom Fan Tray and Front Panel Display in a QFX3008-I Interconnect Device on page 613
- Removing a Bottom Fan Tray and Front Panel Display from a QFX3008-I Interconnect Device on page 611
- Installing a Side Fan Tray in a QFX3008-I Interconnect Device on page 616
- Removing a Side Fan Tray from a QFX3008-I Interconnect Device on page 614
- Installing a Top Fan Tray in a QFX3008-I Interconnect Device on page 619
- Removing a Top Fan Tray from a QFX3008-I Interconnect Device on page 618
- Installing a Bottom Air Filter in a QFX3008-I Interconnect Device on page 622
- Removing a Bottom Air Filter from a QFX3008-I Interconnect Device on page 620
- Installing a Side Air Filter in a QFX3008-I Interconnect Device on page 625
- Removing a Side Air Filter from a QFX3008-I Interconnect Device on page 623

16-Port QSFP+ Front Cards in a QFX3008-I Interconnect Device

The 16-port QSFP+ front cards installed in the QFX3008-I Interconnect device provide the first and last stage of switch fabric functionality in a QFX3000 QFabric system. See Figure 28 on page 53.

A QFX3008-I Interconnect device can have up to eight front cards. All eight front cards are fully connected to all eight rear cards. The impact of a front card failure on the performance of an QFX3000 QFabric system varies based on how your Node devices are connected to the QFX3008-I Interconnect device and the traffic mix flowing through them. See "Understanding Redundancy of QFX3008-I Interconnect Device Components and Functionality" on page 43.

Copyright © 2018, Juniper Networks, Inc.

Figure 28: 16-Port QSFP+ Front Card

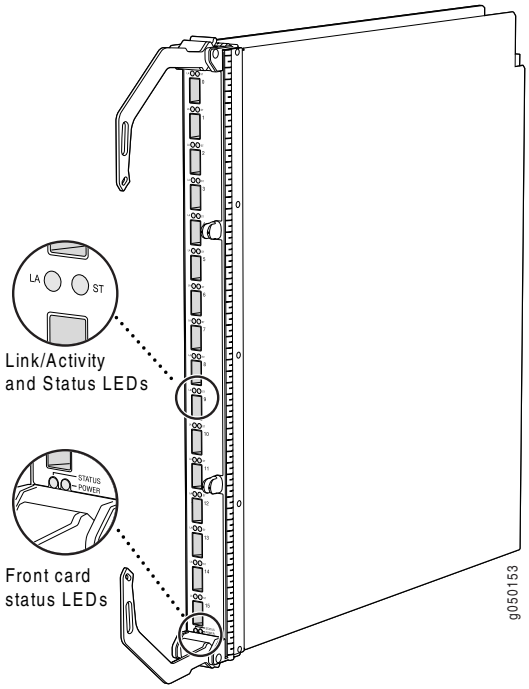

The 16-port QSFP+ front cards are installed in the front of the chassis in the slots labeled **0** through **7**. See "Slot Numbering for a QFX3008-I Interconnect Device" on page 44.

The 16-port QSFP+ front cards are hot-insertable and hot-removable field-replaceable units (FRUs). However, you must take the front cards offline before removing them. See "Taking a 16-Port QSFP+ Front Card Offline in a QFX3008-I Interconnect Device" on page 633.

Each 16-port QSFP+ front card has these components:

- LEDs—Indicate port and system status. See "16-Port QSFP+ Front Card LEDs on a QFX3008-I Interconnect Device" on page 731.
- 16 40-Gbps QSFP+ ports—Connect to the Node devices in your QFX3000-G QFabric system for data path connectivity.
- Ejector levers—Used for installing and removing the front card.

Related Documentation

- Removing a 16-Port QSFP+ Front Card from a QFX3008-I Interconnect Device on page 634
- Installing a 16-Port QSFP+ Front Card in a QFX3008-I Interconnect Device on page 636

Control Board in a QFX3008-I Interconnect Device

The Control Board performs Routing Engine functions in a QFX3008 Interconnect device. See Figure 29 on page 54.

The Control Boards install horizontally into the top rear of the chassis in slots labeled **CB 0** and **CB 1**.

Figure 29: Control Board in a QFXC08 Chassis

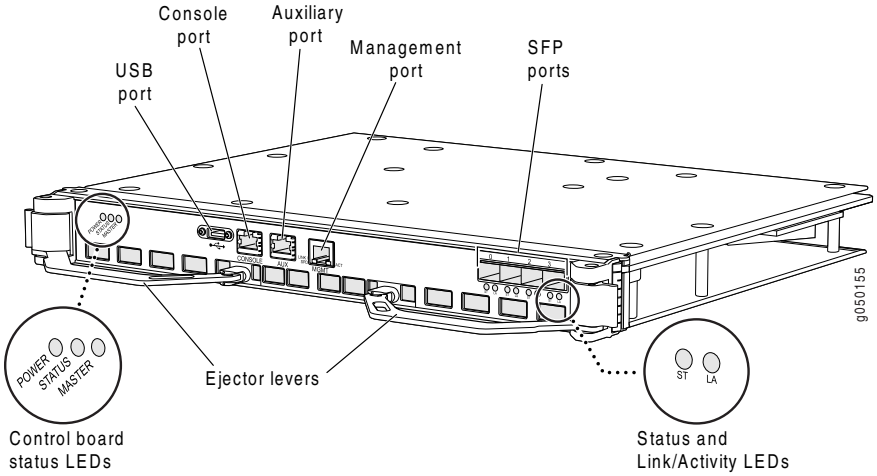

One Control Board functions as the master, and the other acts as the backup. If the master Control Board fails or is removed, the backup Control Board takes over as the master Control Board. When the Control Boards are configured for graceful switchover, the backup Control Board automatically synchronizes its configuration and state with those of the master Control Board. Any update to the master Control Board is replicated on the backup Control Board. If the master Control Board fails, or mastership is switched to the backup Control Board, packet forwarding stops on the QFXC08 chassis. When the backup Control Board assumes mastership, packet forwarding continues through the device.

If you need to replace the master Control Board, we recommend that you switch mastership to the backup Control Board. We recommend that you always take a Control Board offline before removing it. See "Taking a Control Board Offline in a QFX3008-I Interconnect Device" on page 627.

The Control Board provides these functions:

- Powers the 16-port QSFP+ front cards on and off
- Powers the rear cards on and off
- Performs routing functions for the device
- Controls system resets and the boot sequence for the device
- Monitors and controls the speed of the fans in the fan trays
- Monitors and controls the LCD panel and chassis status LEDs
- Monitors the communication of the 16-port QSFP+ front cards with the rear cards
- Monitors the status of the power supplies

The Control Board has these components:

Copyright © 2018, Juniper Networks, Inc.

- Control Board LEDs—Indicate system status. See "Control Board LEDs on a QFX3008-I Interconnect Device" on page 729.
- USB port—Provides an interface through which you can recover the device by reinstalling Junos OS software. See "USB Port Specifications for the QFX Series" on page 257 ,*Performing a Recovery Installation Using an Emergency Boot Device*, and "Performing a Recovery Installation" on page 839.
- Console port—Connects the Control Board to a management console through a serial connection using a cable with an RJ-45 connector. See "Connecting a QFX Series Device to a Management Console" on page 386.
- Auxiliary port—This port is not enabled. It is reserved for future use.
- Management port—This port is not enabled. It is reserved for future use.
- Four Gigabit Ethernet SFP+ ports—Connect the Control Board to the QFX3000-G QFabric system control plane network. See "Connecting a QFX3008-I Interconnect Device to a Copper-Based QFX3000-G QFabric System Control Plane Network" on page 505.
- Ejector levers—Used for installing and removing the Control Board.

Related Documentation

- Installing a Control Board in a QFX3008-I Interconnect Device on page 631
- Removing a Control Board from a QFX3008-I Interconnect Device on page 629

Rear Cards in a QFX3008-I Interconnect Device

The rear cards provide the intermediate stage of switch fabric functionality in a QFX3008-I Interconnect Device. See Figure 30 on page 56.

A QFX3008-I Interconnect Device has eight rear cards. In the QFX3008-I Interconnect Device, all eight rear cards are simultaneously active when the device is operational. All rear cards are fully connected to all installed 16-port QSFP+ front cards. If a single rear card fails, the input/output traffic for that card is load-balanced among the remaining rear cards, providing graceful degradation in switching performance. The impact of a rear card failure on the performance of a QFX3008-I Interconnect Device varies based on the number of 16-port QSFP+ front cards installed in the device and the traffic mix flowing through them.

Copyright © 2018, Juniper Networks, Inc.

Figure 30: Rear Card in a QFX3008-I Interconnect Device

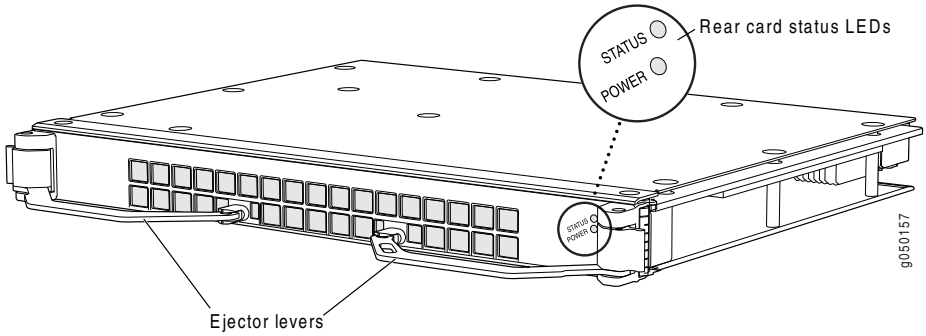

The rear cards are installed at the rear of the chassis in the slots labeled **0** through **7**. See "Slot Numbering for a QFX3008-I Interconnect Device" on page 44.

The rear cards are hot-insertable and hot-removable field-replaceable units (FRUs). However, you must take the rear cards offline before removing them. See "Taking the Rear Card Offline in a QFX3008-I Interconnect Device" on page 638.

The rear cards provide these functions:

- Provide data path connectivity for the QFabric (switch data between Node devices)

The rear cards have these components:

- Rear card LEDs—Indicate system status. See "Rear Card LEDs on a QFX3008-I Interconnect Device" on page 733.
- Ejector levers—Used for installing and removing the rear card.

Related Documentation

- Removing a Rear Card from a QFX3008-I Interconnect Device on page 640
- Installing a Rear Card in a QFX3008-I Interconnect Device on page 641

AC Power Supply in a QFX3008-I Interconnect Device

The AC power supply in a QFX3008-I Interconnect device is a hot-insertable and hot-removable field-replaceable unit (FRU).

The QFX3008-I Interconnect device has six power supplies and two wiring trays. Power supplies are installed at the rear bottom of the chassis in slots **0** through **5** (left to right when viewed from the rear of the chassis). Wiring trays are installed at the rear bottom of the chassis on either side of the power supplies. The wiring tray in slot **Wiring Tray 0** provides input power to the power supplies in slots **0** through **2**. The wiring tray in slot **Wiring Tray 1** provides input power to the power supplies in slots **3** through **5**.

WARNING: **The chassis is pluggable type A equipment installed in a restricted-access location. It has a separate protective earthing terminal**

Copyright © 2018, Juniper Networks, Inc.

provided on the chassis. This separate protective earthing terminal must be permanently connected to earth ground.

NOTE: The power supplies in a QFX3008-I Interconnect device continue to draw a small amount of power when the C19 wiring tray power switch is in the off position. The status LEDs on each power supply blink amber because the power supply fans are not operating. This is expected behavior.

NOTE: The QFX3008-I Interconnect device has two protective earthing terminals provided on the rear of the chassis. Only one of these protective earthing terminals needs to be permanently connected to earth ground. The first pair is sized for M6 screws and is located below the wiring tray on the bottom left corner at the rear of the chassis. The second pair is sized for UNC ¼-20 screws and is located below the second wiring tray on the bottom right corner at the rear of the chassis. The grounding points are spaced at 0.625 in. (15.86 mm).

Each power supply is cooled by its own fans. The airflow is from the front of the power supply to the back. Hot air exhausts from the rear of the chassis. Three LEDs on the faceplate indicate the status of the power supply. See Figure 31 on page 57.

Figure 31: AC Power Supply

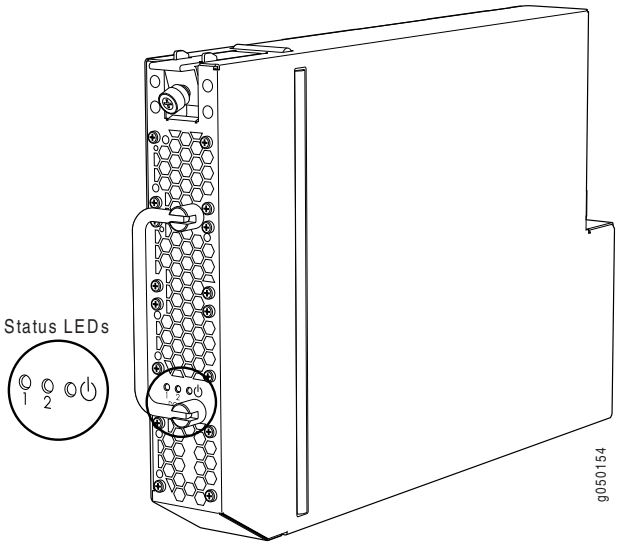

Each power supply contains two isolated 2000-W channels that produce 54 VDC. The midplane distributes the output power produced by the power supplies to different system components.

The distribution of power to the QFX3008-I Interconnect device is divided between components, and each power supply provides power to different components. Together,

the three power supplies in slots **0** through **2** provide power for the entire system. Likewise, the power supplies in slots **3** through **5** also provide power to the entire system. In standard power redundancy terminology, the two sets of three power supplies provide *2N* redundancy for the QFX3008-I Interconnect device, where *N* is the number of power supplies.

Because each power supply provides power to a subset of components, a second power supply that provides power to the same components must be installed for redundancy. For example, during normal operation the power supplies in slot **1** and slot **4** provide power to the same components on a load-sharing basis. If the power supply in slot **1** fails, the power supply in slot **4** can provide full power to the components indefinitely.

Table 8 on page 58 lists the pairs of power supplies and the components they power in a QFX3008-I Interconnect device.

Table 8: Power Supply Distribution Pairings for a QFX3008-I Interconnect Device

Power Supplies	Components Powered
Power supply slots **0** and **5**	• Front card slots **6–7** • Rear card slots **0–3** • Control Board slot **1** • Top front fan tray and side fan trays **0–3**
Power supply slots **1** and **4**	• Front card slots **0–1** • Rear card slots **4–7** • Control Board slot **0** • Bottom front fan tray and side fan trays **4–7**
Power supply slots **2** and **3**	Front card slots **2–5**

Related Documentation

- AC Power Specifications for a QFX3008-I Interconnect Device with Single-Phase Wiring Trays on page 281
- AC Power Supply LEDs on a QFX3008-I Interconnect Device on page 734
- Power Requirements for a QFX3008-I Interconnect Device on page 283
- Installing an AC Power Supply in a QFX3008-I Interconnect Device on page 607
- Removing an AC Power Supply from a QFX3008-I Interconnect Device on page 605
- Installing a Wiring Tray in a QFX3008-I Interconnect Device on page 610
- Removing a Wiring Tray from a QFX3008-I Interconnect Device on page 608

Wiring Tray in a QFX3008-I Interconnect Device

The wiring tray in a QFX3008-I Interconnect device is a hot-insertable and hot-removable field-replaceable unit (FRU).

Copyright © 2018, Juniper Networks, Inc.

The QFX3008-I Interconnect device has six power supplies and two wiring trays in a QFX3008-I Interconnect device. Power supplies are installed at the rear bottom of the chassis in slots **0** through **5** (left to right when viewed from the rear of the chassis). Wiring trays are installed at the rear bottom of the chassis on either side of the power supplies. The wiring tray in slot **Wiring Tray 0** provides input power to the power supplies in slots **0** through **2**. The wiring tray in slot **Wiring Tray 1** provides input power to the power supplies in slots **3** through **5**.

WARNING: The chassis is pluggable type A equipment installed in a restricted-access location. It has a separate protective earthing terminal provided on the chassis. This separate protective earthing terminal must be permanently connected to earth ground.

CAUTION: Mixing different types of wiring trays in the same chassis is not a supported configuration.

The single-phase wiring tray has three appliance inlets. See "AC Power Specifications for a QFX3008-I Interconnect Device with Single-Phase Wiring Trays" on page 281.

NOTE: To provide power feed redundancy, all three appliance inlets on the single-phase wiring tray in slot **Wiring Tray 0** must be powered by dedicated power feeds derived from feed A, and all appliance inlets on the wiring tray in slot **Wiring Tray 1** must be powered by dedicated power feeds derived from feed B. This configuration provides the commonly deployed A/B feed redundancy for the system.

The three-phase wiring trays have a terminal block specific to either standard delta or standard wye wiring configurations. The power cords that you provide for the three-phase wiring trays must be installed before you install the wiring trays. See "AC Power Specifications for a QFX3008-I Interconnect Device with Three-Phase Delta Wiring Trays" on page 282 and "AC Power Specifications for a QFX3008-I Interconnect Device with Three-Phase Wye Wiring Trays" on page 282.

NOTE: To provide power feed redundancy, the three-phase wiring tray in slot **Wiring Tray 0** must be powered by a dedicated power feed derived from feed A, and the wiring tray in slot **Wiring Tray 1** must be powered by a dedicated power feed derived from feed B. This configuration provides the commonly deployed A/B feed redundancy for the system.

You must install two wiring trays in a QFX3008-I Interconnect device. Wiring trays are installed at the bottom of the chassis in slots labeled **Wiring Tray 0** and **Wiring Tray 1** (left to right). See "Slot Numbering for a QFX3008-I Interconnect Device" on page 44.

Copyright © 2018, Juniper Networks, Inc.

NOTE: A QFX3008-I Interconnect device has two protective earthing terminals provided on the rear of the chassis. The first pair is sized for M6 screws and is located below the wiring tray on the bottom left corner at the rear of the chassis. The second pair is sized for UNC ¼-20 screws and is located below the second wiring tray on the bottom right corner at the rear of the chassis. The grounding points are spaced at 0.625 in. (15.86 mm). Only one of the two protective earthing terminals needs to be permanently connected to earth ground.

Three LEDs on the faceplate indicate the status of each power channel. Each wiring tray also has a power switch on the faceplate. See Figure 32 on page 60 and Figure 33 on page 61.

Figure 32: Single-Phase Wiring Tray

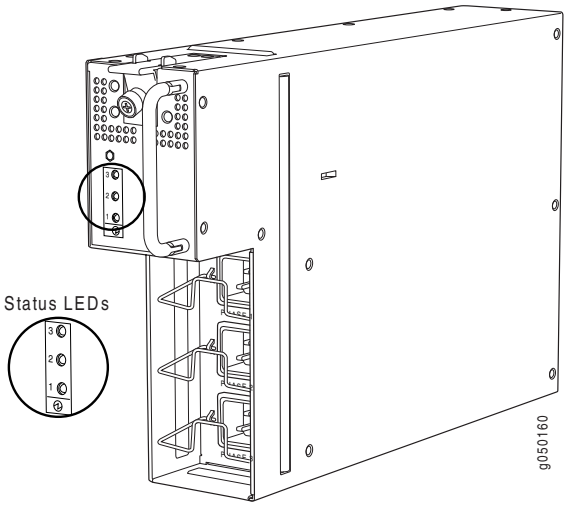

Copyright © 2018, Juniper Networks, Inc.

Figure 33: Three-Phase Wiring Tray

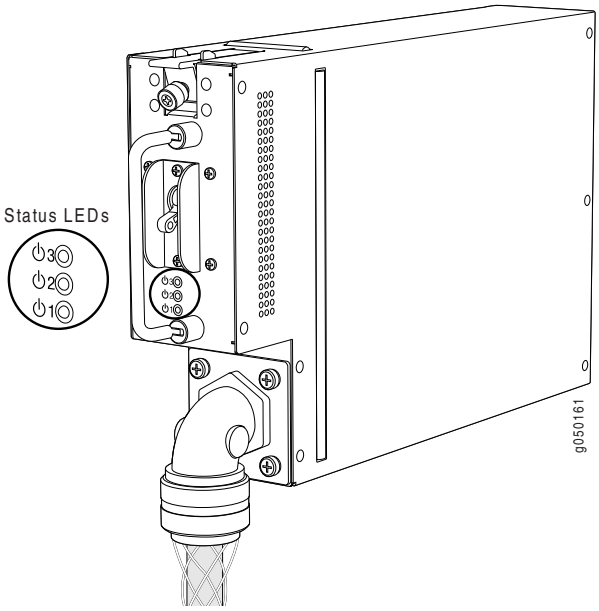

Related Documentation

- Wiring Tray LEDs on a QFX3008-I Interconnect Device on page 735
- Calculating Power Requirements for a QFX3008-I Interconnect Device on page 288
- Installing a Wiring Tray in a QFX3008-I Interconnect Device on page 610
- Removing a Wiring Tray from a QFX3008-I Interconnect Device on page 608
- Preparing Delta and Wye Three-Phase Power Cords on page 413

Grounding Cable and Lug Specifications for a QFX3008-I Interconnect Device

The QFX3008-I Interconnect device must be adequately grounded before power is connected to ensure proper operation and to meet safety and electromagnetic interference (EMI) requirements. To ground a QFX3008-I Interconnect device, connect a grounding cable to earth ground and then attach it to the chassis grounding points.

WARNING: **The device is pluggable type A equipment installed in a restricted-access location. It has a separate protective earthing terminal provided on the chassis in addition to the grounding pin of the power supply cord. This separate protective earthing terminal must be permanently connected to earth ground for installations that require a separate grounding conductor to the chassis.**

CAUTION: **Before device installation begins, a licensed electrician must attach a cable lug to the grounding cables that you supply. A cable with an incorrectly attached lug can damage the device.**

Before connecting the device to earth ground, review the following information:

- Two pairs of threaded inserts (PEM nuts) are provided on the QFX3008-I Interconnect device for connecting the device to earth ground. The first pair is sized for M6 screws and is located below the wiring tray on the bottom left corner at the rear of the chassis. The second pair is sized for UNC ¼-20 screws and is located below the second wiring tray on the bottom right corner at the rear of the chassis. The grounding points are spaced at 0.625 in. (15.86 mm). UNC ¼-20 screws with washers are provided in the accessory kit.
- The grounding lug required is a Panduit LCD2-14A-Q or equivalent. This grounding lug is provided in the accessory kit.
- The grounding cable that you provide for a QFX3008-I Interconnect device must be 2 AWG (33.6 mm^2), minimum 60° C wire, or as permitted by the local code.

NOTE: **Only one of the two protective earthing terminals needs to be permanently connected to earth ground.**

Related Documentation

- Connecting Earth Ground to a QFX3008-I Interconnect Device on page 409
- Connecting AC Power to a QFX3008-I Interconnect Device with Single-Phase Wiring Trays on page 411
- Connecting AC Power to a QFX3008-I Interconnect Device with Three-Phase Delta Wiring Trays on page 418
- Connecting AC Power to a QFX3008-I Interconnect Device with Three-Phase Wye Wiring Trays on page 422

Copyright © 2018, Juniper Networks, Inc.

CHAPTER 4

QFX5100 Overview

- QFX5100 Device Hardware Overview on page 63
- QFX5100 Device Models on page 72
- Field-Replaceable Units in a QFX5100 Device on page 75
- Understanding Hardware Redundancy of QFX5100 Device Components and Functionality on page 75
- Chassis Physical Specifications for a QFX5100 Device on page 76
- Port Panel of QFX5100-48S and QFX5100-48SH Devices on page 77
- Port Panel of QFX5100-48T and QFX5100-48TH Devices on page 79
- Port Panel of a QFX5100-24Q Device on page 81
- Management Panel of a QFX5100 Device on page 85
- Cooling System and Airflow in a QFX5100 Device on page 88
- AC Power Supply for a QFX5100 Device on page 94
- DC Power Supply in a QFX5100 Device on page 96

QFX5100 Device Hardware Overview

The QFX5100 line of switches is Juniper Network's second generation of top-of-rack switch solutions for data centers and campus distribution or aggregation environments. The QFX5100 portfolio consists of high-performance fixed-configuration switches that add higher port densities, additional scalability, and improved latency to the QFX Series.

- QFX5100 Hardware on page 63
- System Software on page 72

QFX5100 Hardware

QFX5100 line of switches offer two compact 1 U models and a 2 U model that provide wire-speed packet performance, very low latency, and rich set of Layer 2 and Layer 3 features. In addition to a high-throughput Packet Forwarding Engine, the performance of the control plane running on all the QFX5100 switches is enhanced by the 1.5 Ghz dual-core Intel CPU with 8 GB of memory and 32 GB of solid-state drive (SSD) storage.

The QFX5100-24Q-AA switch has a 2.5 GHz 4-core Intel CPU with 32 GB of memory and 128 GB of SSD storage.

Copyright © 2018, Juniper Networks, Inc.

The QFX5100 line of switches include both 10GE and 40GE fixed-configurations:

- QFX5100-48S

  As shown in Figure 34 on page 64, the QFX5100-48S is a 10-Gigabit Ethernet Enhanced Small Form-Factor Pluggable (SFP+) top-of-rack switch with 48 SFP+ ports and 6 Quad SFP+ (QSFP+) ports. Each SFP+ port can operate as a native 10 Gigabit port, when 10 Gbps optics are used. The SFP+ ports can also run at 1 Gbps, or at 100 Mbps speeds when 1_Gigabit optics are inserted. Each QSFP+ port (**48** through **53**) can operate as uplink ports or four QSFP+ port (**50** through **53**) can operate at native 40-Gigabit speed or as 4 independent 10-Gigabit port speeds. The 6 QSFP+ ports can be used as either access ports or as uplinks. The QFX5100-48S provides full duplex throughput of 1.44 Tbps. The QFX5100-48S has a 1 U form factor and comes standard with redundant fans and redundant power supplies. The switch can be ordered with either ports-to-FRUs or FRUs-to-ports airflow and with AC or DC power supplies.

Figure 34: QFX5100-48S Port Panel

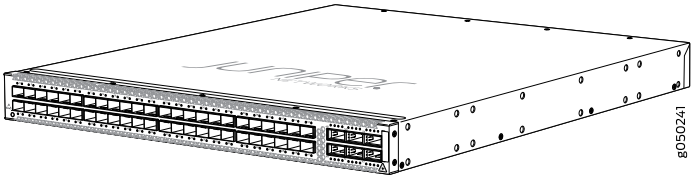

The QFX5100-48S can be used as:

- A standalone switch.
- A Node device in a QFabric system.

  The QFX5100-48S is supported on both the QFX3000-G and QFX3000-M QFabric systems.
- A master, backup, or line card in a QFX Virtual Chassis.

  A QFX Virtual Chassis allows you to interconnect up to 10 QFX3500, QFX3600, or QFX5100 switches into one logical device and manage the device as a single chassis using a ring topology.
- A line card in a QFX5110 Virtual Chassis.

  A QFX5110 Virtual Chassis must have a QFX5110-32Q as the master. Only QFX5110 and select models of QFX5100 can participate in a QFX5110 Virtual Chassis.
- A spine or leaf device in a standard QFX5100 Virtual Chassis Fabric (VCF).

  VCF uses Virtual Chassis technology to interconnect multiple devices into a single logical device and manage that device as a single logical device inside of a fabric architecture. VCF architecture supports up to 20 total devices in a spine and leaf topology. Out of the 20 total devices, you can configure a maximum of 4 spine devices.

  A QFX5100 VCF uses QFX5100 devices as spines or leaf devices. You can also use QFX3500, QFX3600, and EX4300 models as leaf devices in a QFX5100 VCF.

Copyright © 2018, Juniper Networks, Inc.

Whenever possible, configure the QFX5100-24Q as the spine device in a QFX5100 VCF. You can use the QFX5100-48S as the spine in an all QFX5100-48S VCF or when EX4300 devices are used as leaf devices.

- A leaf device in a QFX5110 VCF.

  A QFX5110 VCF must have a minimum of two QFX5110-32Q as spine devices. Junos OS Release 17.3R1 or later is required for QFX5110 VCF.

- A satellite device in a Junos Fusion system.

  Junos OS Release 14.2.3 or later is required for Junos Fusion.

- QFX5100-48SH

  As shown in Figure 35 on page 65, the QFX5100-48SH is the same form factor and port configuration as the QFX5100-48S. The QFX5100-48SH is specifically designed for Juniper Networks Cloud Data Center and comes pre-configured with Satellite Network Operational System (SNOS) instead of Juniper Networks Junos OS. The switch may not be converted to Junos OS without an additional license. The switch can be ordered with either ports-to-FRUs or FRUs-to-ports airflow and with AC power supplies.

  The QFX5100-48SH can only be used as a satellite device in a Junos Fusion system.

Figure 35: QFX5100-48SH Port Panel

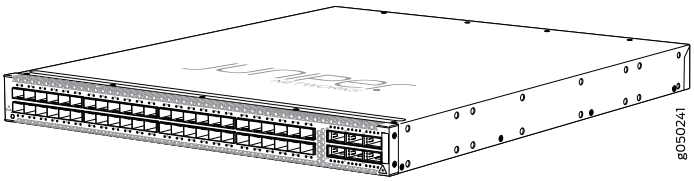

- QFX5100-48T

  As shown in Figure 36 on page 65, the QFX5100-48T is a tri-speed 100/1000/10GBASE-T top-of-rack switch with 48 10GBASE-T access ports and 6 QSFP+ ports. Each 40-Gigabit QSFP+ port (**48** through **53**) can operate either as uplink ports or four QSFP+ ports (**50** through **53**) can operate at native 40-Gigabit port or be channelized into 4 independent 10 Gigabit ports. The 6 QSFP+ ports can be used as either access ports or as uplinks. The QFX5100-48T provides full duplex throughput of 720 Gbps. The QFX5100-48T has a 1 U form factor and comes standard with redundant fans and redundant power supplies. The switch can be ordered with either ports-to-FRUs or FRUs-to-ports airflow and with AC or DC power supplies.

Figure 36: QFX5100-48T Port Panel

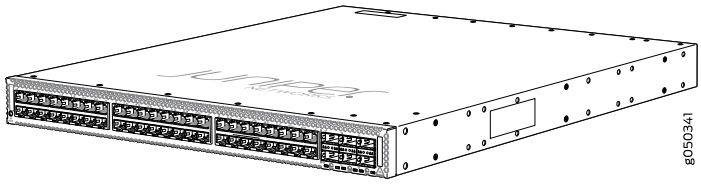

The QFX5100-48T can be used as:

- A standalone switch.
- A Node device in a QFabric system.

  The QFX5100-48T is supported on both the QFX3000-G and QFX3000-M QFabric systems.
- A master, backup, or line card in a QFX Virtual Chassis.

  A QFX Series Virtual Chassis allows you to interconnect up to ten QFX5100, QFX3500, or QFX3600, switches into one logical device and manage the device as a single chassis using a ring topology.
- A line card in a QFX5110 Virtual Chassis.

  You can configure up to ten QFX5110 and QFX5100 switches into one logical device and manage the device as a single chassis using a ring topology. In a QFX5110 Virtual Chassis, configure QFX5110-32Q as the master and backup. Junos OS Release 17.3R2 or later is required on all members for QFX5110 VCF with QFX5100-48T leaf devices.
- A leaf device in a standard QFX5100 Virtual Chassis Fabric (VCF).

  VCF uses Virtual Chassis technology to interconnect multiple devices into a single logical device and manage that device as a single logical device inside of a fabric architecture. VCF architecture supports up to 20 total devices in a spine and leaf topology. Of those 20 devices, four QFX5100 devices can be configured as spine devices.

  In a QFX5100 VCF, the QFX5100-48T is always a leaf device and a QFX5100-24Q is the spine device.
- A leaf device in a QFX5110 VCF.

  A QFX5110 VCF must have a minimum of two QFX5110-32Q as spine devices. Junos OS Release 17.3R2 or later is required on all VCF devices for QFX5100-48T leaf devices to operate in a QFX5110 VCF.
- A satellite device in a Junos Fusion system.

  Junos OS Release 14.2.3 or later is required for Junos Fusion.

- QFX5100-48TH

  As shown in Figure 37 on page 67, the QFX5100-48TH is the same form factor and port configuration as the QFX5100-48T. The QFX5100-48TH is specifically designed for Juniper Networks Cloud Data Center and comes pre-configured with Satellite Network Operational System (SNOS) instead of Juniper Networks Junos OS. The switch may not be converted to Junos OS without an additional license. The switch can be ordered with either ports-to-FRUs or FRUs-to-ports airflow and with AC power supplies.

  The QFX5100-48TH can only be used as a satellite device in a Junos Fusion system.

Copyright © 2018, Juniper Networks, Inc.

Figure 37: QFX5100-48THPort Panel

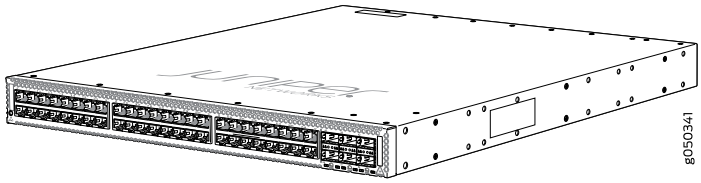

- QFX5100-24Q

  As shown in Figure 38 on page 67, the QFX5100-24Q is a 40-Gigabit Ethernet QSFP+ switch with 24 high-density QSFP+ ports. Each QSFP+ port can operate as a native 40 Gbps port or as 4 independent 10 Gbps ports. The QFX5100-24Q switch has a 1 U form factor and comes standard with redundant fans and redundant power supplies. The switch can be ordered with either ports-to-FRUs or FRUs-to-ports airflow and with AC or DC power supplies.

  The QFX5100-24Q switch has two module bays for the optional expansion module, QFX-EM-4Q, which can add a total of 8 additional QSFP+ ports to the chassis. When operating as a standalone switch and fully populated with QFX-EM-4Q Expansion Modules, the QFX5100-24Q switch is equivalent to 80 10 Gbps interfaces and 4 40-Gbps interfaces. Of these total ports, 104 logical ports are available for 10G port channelization. For full details on the different port channelization modes, see "Port Panel of a QFX5100-24Q Device" on page 81. All ports on the QFX5100-24Q and QFX-EM-4Q can be configured as either access ports or as uplinks. The QFX5100-24Q switch provides full duplex throughput of 2.56 Tbps.

Figure 38: QFX5100-24Q Port Panel

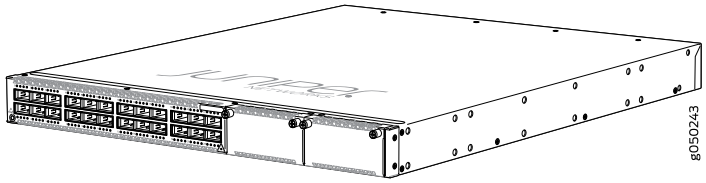

  The QFX5100-24Q can be used as:

  - A standalone switch.
  - An interconnect device in a QFX3000-M QFabric system.
  - A Node device in a QFabric system.

    The QFX5100-24Q is supported on both the QFX3000-G and QFX3000-M QFabric systems. A QFX5100-24Q Node device is equivalent to 80 10-Gbps interfaces and 4 40-Gbps interfaces.

  - A master, backup, or line card in a QFX Virtual Chassis.

    A QFX Series Virtual Chassis allows you to interconnect up to 10 QFX3500, QFX3600, or QFX5100 switches into one logical device and manage the device as a single chassis in a ring topology.

    Use QFX5100-24Q switches as the master and backup in a QFX Virtual Chassis.

Copyright © 2018, Juniper Networks, Inc.

- A line card in a QFX5110 Virtual Chassis.

  A QFX5110 Virtual Chassis must have a QFX5110-32Q as the master. Only QFX5110 switches and select models of QFX5100 can participate in a QFX5110 Virtual Chassis. Junos OS Release 17.3R1 or later is required for QFX5110 Virtual Chassis.

- A spine or leaf device in a standard QFX5100 Virtual Chassis Fabric (VCF).

  VCF uses Virtual Chassis technology to interconnect multiple devices into a single logical device and manage that device as a single logical device inside of a fabric architecture. VCF architecture supports up to 20 total devices in a spine and leaf topology. Out of the 20 total devices, you can configure a maximum of 4 spine devices.

  A QFX5100 VCF uses QFX5100 devices as spines or leaf devices. You can also use QFX3500, QFX3600, and EX4300 models as leaf devices in a QFX5100 VCF.

  Whenever possible, configure the QFX5100-24Q as the spine device in a QFX5100 VCF.

- A leaf device in a QFX5110 VCF.

  A QFX5110 VCF must have a minimum of two QFX5110-32Q as spine devices. Junos OS Release 17.3R1 or later is required for QFX5110 VCF.

- A satellite device in a Junos Fusion system.

  Junos OS Release 14.2.3 or later is required for Junos Fusion.

The QFX5100-24Q switch has two bays on the port panel for optional expansion modules. The QFX5100-24Q supports two expansion modules to increase port density:

- QFX-EM-4Q, which provides four additional 40-Gigabit Quad SFP+ (QSFP+) ports. See Figure 39 on page 68.

Figure 39: QFX-EM-4Q Expansion Module

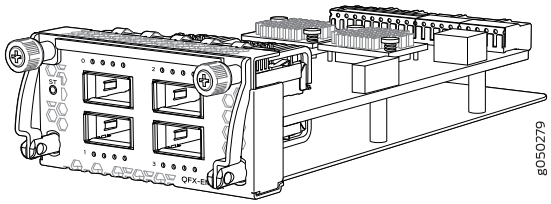

- EX4600-EM-8F, which provides eight additional 10-Gigabit Ethernet Enhanced Small Form-Factor Pluggable (SFP+) or four 1-Gigabit Ethernet ports. See Figure 40 on page 69.

CAUTION: **Use only the top four ports or the bottom four ports for SFP transceivers. Because SFP transceivers are larger than SFP+ transceivers, attempting to stack SFP transceivers can cause internal damage to the module.**

Copyright © 2018, Juniper Networks, Inc.

Figure 40: EX4600-EM-8F Expansion Module

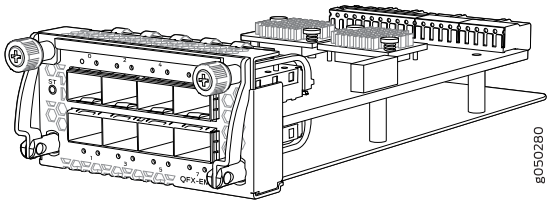

NOTE: The EX4600-EM-8F is not supported on the QFX5100-24Q running in QFabric systems.

The QFX5100-24Q is configured for the QFX-EM-4Q by default, but any combination of the two modules is supported. Expansion modules can be hot-inserted or hot-removed. However, when an EX4600-EM-8F is inserted instead of the default QFX-EM-4Q, the new configuration causes the interfaces to temporarily go down. Likewise, when an EX4600-EM-8F is running on the QFX5100-24Q and it is swapped with a QFX-EM-4Q, the interfaces temporarily go down, which can cause a short disruption in traffic.

- QFX5100-24Q-AA

  As shown in Figure 41 on page 70, the QFX5100-24Q-AA is a 1 U, top-of-rack, 40-Gigabit Ethernet QSFP+ switch with 24 high-density QSFP+ ports. Each QSFP+ port can be configured to support 40-Gigabit Ethernet or as a set of 4 independent 10-Gigabit Ethernet ports. The QFX5100-24Q-AA can also be configured to support twenty-four 40-Gigabit Ethernet interfaces or ninety-six 10-Gigabit Ethernet interfaces using breakout cables (channelization mode) with 1280 Gbps output. The switch can be ordered with either ports-to-FRUs or FRUs-to-ports airflow and with AC or DC power supplies. The QFX5100-24Q switch provides full duplex throughput of 2.56 Tbps.

  The QFX5100-24Q-AA module bay can accommodate a single Packet Flow Accelerator (PFA) double-wide expansion module (QFX-PFA-4Q) or two single-wide optional expansion modules (two or one each of QFX-EM-4Q and EX4600-EM-8F). The QFX-PFA-4Q, which features a high-performance field-programmable gate array (FPGA), provides four additional QSFP+ ports to the chassis. Each QFX-EM-4Q adds four QSFP+ ports to the chassis and each EX4600-EM-8F adds eight 10-Gigabit SFP+ ports to the chassis. The QFX-EM-4Q ports can also be configured as either access ports or uplink ports, but only ports 0 and 2 can be channelized using port mode. For full details on the different port channelization modes, see "Port Panel of a QFX5100-24Q Device" on page 81. All ports on the QFX5100-24Q and QFX-EM-4Q can be configured as either access ports or uplink ports.

  This switch provides the hardware support to enable PTP boundary clocks by using the QFX-PFA-4Q module. The QFX5100-24Q-AA also supports GPS in and out signals when QFX-PFA-4Q is installed.

  The CPU subsystem of this switch includes a 2-port 10-Gigabit Ethernet network interface card (NIC) to provide a high bandwidth path or to alternate traffic path to guest VMs directly from the Packet Forwarding Engine.

Copyright © 2018, Juniper Networks, Inc.

Figure 41: QFX5100-24Q-AA Port Panel with QFX-PFA-4Q

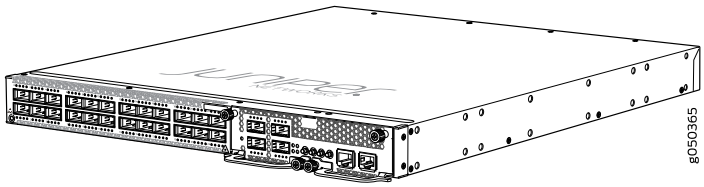

The QFX5100-24Q-AA can be used as a standalone switch that supports high frequency statistics collection. Working with Juniper Networks Cloud Analytics Engine, this switch monitors and reports the workload and application behavior across the physical and virtual infrastructure.

The QFX5100-24Q-AA supports the following expansion modules to increase port density:

- QFX-PFA-4Q (double-wide), which provides four additional QSFP+ ports. See Figure 42 on page 70.

Figure 42: QFX-PFA-4Q Expansion Module

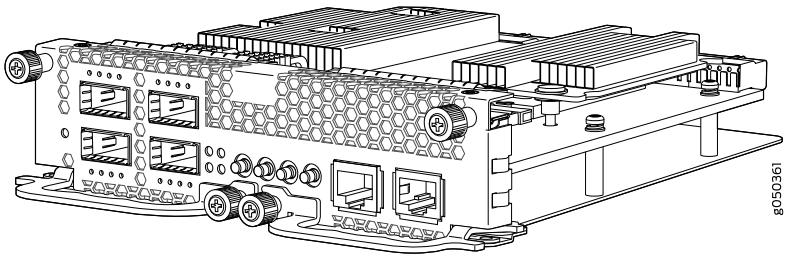

- QFX-EM-4Q (single-wide), which provides 4 additional 40-Gigabit Ethernet QSFP+ ports. See Figure 39 on page 68.
- EX4600-EM-8F (single-wide), which provides 8 additional 10-Gigabit Ethernet SFP+ ports. See Figure 40 on page 69.

The QFX5100-24Q switch supports the QFX-PFA-4Q and you must take the switch offline before replacing the expansion module. Any combination of EX4600-EM-8F and QFX-EM-4Q is also supported. These two expansion modules can be hot-inserted or hot-removed. However, when an EX4600-EM-8F is inserted instead of a QFX-EM-4Q, the new configuration causes the interfaces to temporarily go down. Likewise, when an EX4600-EM-8F is running on the QFX5100-24Q and is swapped with a QFX-EM-4Q, the interfaces temporarily go down, which can cause a short disruption in traffic.

- QFX5100-96S

  As shown in Figure 43 on page 71, the QFX5100-96S switch is a is a 10-Gigabit Ethernet Enhanced Small Form-Factor Pluggable (SFP+) top-of-rack switch with 96 SFP+ ports and 8 Quad SFP+ (QSFP+) ports. Each SFP+ port can operate as a native 10 Gigabit port, when 10 Gbps optics are used. The SFP+ ports can also run at 1 Gbps, or at 100 Mbps speeds when 1_Gigabit optics are inserted. QSFP+ ports 96 and 100 can operate at native 40 Gbps speed or can be channelized to 4 independent 10 Gbps port speeds. The 8 QSFP+ ports can be used as either access ports or as uplinks. The

 Copyright © 2018, Juniper Networks, Inc.

QFX5100-96S switch has a 2 U form factor and comes standard with redundant fans and redundant power supplies. The switch can be ordered with either ports-to-FRUs or FRUs-to-ports airflow and with AC or DC power supplies.

Figure 43: QFX5100-96S Port Panel

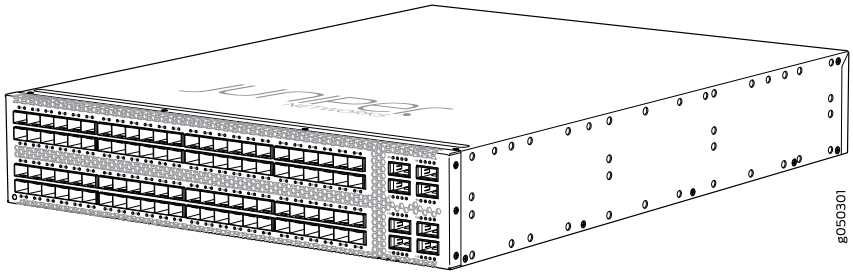

The QFX5100-96S can be used as:

- A standalone switch.
- A member in a QFX Virtual Chassis.

  A QFX Series Virtual Chassis allows you to interconnect up to ten QFX3500, QFX3600, or QFX5100 switches into one logical device and manage the device as a single chassis in a ring topology.
- A spine or leaf device in a Virtual Chassis Fabric (VCF).

  VCF uses Virtual Chassis technology to interconnect multiple devices into a single logical device and manage that device as a single logical device inside of a fabric architecture. VCF architecture supports up to 20 total devices in a spine and leaf topology. Of those 20 devices, 4 QFX5100 devices can be configured as spine devices.

  In a mixed environment with QFX5100-24Q, QFX5100-98S and EX4300, use the QFX5100-24Q as the spine device and the QFX5100-96S and EX4300 as a leaf devices. You may use the QFX5100-96S as a spine in an all QFX5100-96S VCF or in a VCF that has a mixture of QFX5100-96S and EX4300.
- A line card in a mixed QFX5110 Virtual Chassis.

  A QFX5110 Virtual Chassis must have a QFX5110-32Q as the master. Only QFX5110 switches and select models of QFX5100 switches can participate in a QFX5110 Virtual Chassis. Junos OS Release 17.3R1 or later is required for QFX5110 Virtual Chassis.
- A spine or leaf device in a standard QFX5100 Virtual Chassis Fabric (VCF).

  VCF uses Virtual Chassis technology to interconnect multiple devices into a single logical device and manage that device as a single logical device inside of a fabric architecture. VCF architecture supports up to 20 total devices in a spine and leaf topology. Out of the 20 total devices, you can configure a maximum of 4 spine devices.

  A QFX5100 VCF uses QFX5100 devices as spines or leaf devices. You can also use QFX3500, QFX3600, and EX4300 models as leaf devices in a QFX5100 VCF.

  Whenever possible, configure the QFX5100-24Q as the spine device in a QFX5100 VCF.

Copyright © 2018, Juniper Networks, Inc.

- A leaf device in a QFX5110 VCF.

  A QFX5110 VCF must have a minimum of two QFX5110-32Q as spine devices. Junos OS Release 17.3R1 or later is required for QFX5110 VCF.

- A satellite device in a Junos Fusion system.

  Junos OS Release 14.2.3 or later is required for Junos Fusion.

System Software

QFX Series devices use the Junos operating system (OS), which provides Layer 2 and Layer 3 switching, routing, and security services. Junos OS is installed on a QFX5100 switch's 32-gigabyte (GB) internal solid state flash drive. The same Junos OS code base that runs on QFX5100 switches also runs on all Juniper Networks EX Series switches, M Series, MX Series, and T Series routers.

Participation in a QFX5110 Virtual Chassis or a QFX5110 VCF requires the same Junos OS image on all devices in the Virtual Chassis or VCF. Junos OS 17.3R1 or later is the minimum software release for QFX5110 Virtual Chassis or QFX5110 VCF.

For more information about which features are supported on QFX Series devices, see Feature Explorer.

You manage the switch using the Junos OS command-line interface (CLI), accessible through the console and out-of-band management ports on the device.

Related Documentation

- QFX5100 Device Models on page 72
- *Virtual Chassis Fabric Hardware Overview*

QFX5100 Device Models

The QFX5100 switches have 24, 48, or 96 port configurations. The 24 port switches can be expanded to a maximum of 32 QSFP+ ports using expansion modules. All switches are available with either AC or DC power supply and with either airflow-in or airflow-out cooling. In legacy switches, or switches with an LCD, this air flow is called front-to-back and back-to-front.

Table 9 on page 72 lists the ordering numbers for QFX5100 switch product SKUs.

Table 9: QFX5100 Switch Product Numbers

P roduct Numbers	Ports	Number of Expansion Modules	Power Supply	Number of Mgt. Ports	Airflow
QFX5100-24Q-AA	24 QSFP+	Supports 3 expansion modules and has 2 expansion module slots	AC	2	Air In (FRUs-to-ports) and Air Out (ports-to-FRUs)

Copyright © 2018, Juniper Networks, Inc.

Table 9: QFX5100 Switch Product Numbers (continued)

P roduct Numbers	Ports	Number of Expansion Modules	Power Supply	Number of Mgt. Ports	Airflow
QFX5100-24Q-AFI	24 QSFP+	2	AC	2	Air In (FRUs-to-ports)
QFX5100-24Q-3AFI	24 QSFP+	2	AC	3	Air In (FRUs-to-ports)
QFX5100-24Q-AFO	24 QSFP+	2	AC	2	Air Out (ports-to-FRUs)
QFX5100-24Q-3AFO	24 QSFP+	2	AC	3	Air Out (ports-to-FRUs)
QFX5100-24Q-DC-AFI	24 QSFP+	2	DC	2	Air In (FRUs-to-ports)
QFX5100-24Q-D-3AFI	24 QSFP+	2	DC	3	Air In (FRUs-to-ports)
QFX5100-24Q-DC-AFO	24 QSFP+	2	DC	2	Air Out (ports-to-FRUs)
QFX5100-24Q-D-3AFO	24 QSFP+	2	DC	3	Air Out (ports-to-FRUs)
QFX5100-48S-AFI	48 small form-factor pluggable plus (SFP+) and 6 QSFP+ transceivers		AC	2	Air In (FRUs-to-ports)
QFX5100-48S-3AFI	48 small form-factor pluggable plus (SFP+) and 6 QSFP+ transceivers		AC	3	Air In (FRUs-to-ports)
QFX5100-48S-AFO	48 SFP+ and 6 QSFP+ transceivers		AC	2	Air Out (ports-to-FRUs)
QFX5100-48S-3AFO	48 SFP+ and 6 QSFP+ transceivers		AC	3	Air Out (ports-to-FRUs)
QFX5100-48S-DC-AFI	48 SFP+ and 6 QSFP+ transceivers		DC	2	Air In (FRUs-to-ports)
QFX5100-48S-DC-AFO	48 SFP+ and 6 QSFP+ transceivers		DC	2	Air Out (ports-to-FRUs)
QFX5100-48SH-AFI	48 SFP+ and 6 QSFP+ transceivers		AC	3	Air In (FRUs-to-ports)

Copyright © 2018, Juniper Networks, Inc.

Table 9: QFX5100 Switch Product Numbers (continued)

P roduct Numbers	Ports	Number of Expansion Modules	Power Supply	Number of Mgt. Ports	Airflow
QFX5100-48SH-AFO	48 SFP+ and 6 QSFP+ transceivers		AC	3	Air Out (ports-to-FRUs)
QFX5100-48T-AFI	48 10GBASE-T and 6 QSFP+ transceivers		AC	3	Air In (FRUs to ports)
QFX5100-48T-AFO	48 10GBASE-T and 6 QSFP+ transceivers		AC	3	Air Out (ports to FRUs)
QFX5100-48T-DC-AFI	48 10GBASE-T and 6 QSFP+ transceivers		DC	3	Air In (FRUs to ports)
QFX5100-48T-DC-AFO	48 10GBASE-T and 6 QSFP+ transceivers		DC	3	Air Out (ports to FRUs)
QFX5100-48TH-AFI	48 10GBASE-T and 6 QSFP+ transceivers		AC	3	Air In (FRUs to ports)
QFX5100-48TH-AFO	48 10GBASE-T and 6 QSFP+ transceivers		AC	3	Air Out (ports to FRUs)
QFX5100-96S-AFI	96 SFP+ and 8 QSFP+ transceivers		AC	2	Air In (FRUs-to-ports)
QFX5100-96S-AFO	96 SFP+ and 8 QSFP+ transceivers		AC	2	Air Out (ports-to-FRUs)
QFX5100-96S-DC-AFI	96 SFP+ and 8 QSFP+ transceivers		DC	2	Air In (FRUs-to-ports)
QFX5100-96S-DC-AFO	96 SFP+ and 8 QSFP+ transceivers		DC	2	Air Out (ports-to-FRUs)

CAUTION: Mixing different types (AC and DC) of power supplies in the same chassis is not supported. Mixing different airflow modules in the same chassis is not supported.

Related Documentation

- Management Panel of a QFX5100 Device on page 85
- Port Panel of QFX5100-48S and QFX5100-48SH Devices on page 77
- Port Panel of a QFX5100-24Q Device on page 81
- *Port Panel of a QFX5100-96S Device*
- QFX5100 Device Hardware Overview on page 63

Copyright © 2018, Juniper Networks, Inc.

Field-Replaceable Units in a QFX5100 Device

Field-replaceable units (FRUs) are components that you can replace at your site. The QFX5100 device FRUs are hot-insertable and hot-removable: you can remove and replace one of them without powering off the switch or disrupting the switching function.

CAUTION: Replace a failed power supply with a blank panel or new power supply within one minute of removal to prevent chassis overheating. The switch continues to operate with only one power supply running. Replace a failed fan module with a new fan module within one minute of removal to prevent chassis overheating. Do not operate the switch with missing FRUs for longer than one minute.

Table 10 on page 75 lists the FRUs for the QFX5100 device and actions to take before removing them.

Table 10: FRUs in a QFX5100 Switch

FRU	Required Action
Power supplies	None.
Expansion modules	None
Fan modules	None.
Optical transceivers	None. We recommend that you disable the interface using the **set interfaces *interface-name* disable** command before you remove the transceiver. See "Disconnecting a Fiber-Optic Cable from a QFX Series Device" on page 711.

NOTE: If you have a Juniper Care service contract, register any addition, change, or upgrade of hardware components at https://www.juniper.net/customers/support/tools/updateinstallbase/ . Failure to do so can result in significant delays if you need replacement parts. This note does not apply if you replace existing components with the same type of component.

Related Documentation

- Installing and Removing QFX5100 Device Hardware Components on page 665

Understanding Hardware Redundancy of QFX5100 Device Components and Functionality

The following hardware components provide redundancy on a QFX5100 switch:

- Power supplies—The QFX5100 switch has one or two power supplies. Each power supply provides power to all components in the switch. If two power supplies are installed, the two power supplies provide full power redundancy to the device. If one power supply fails or is removed, the second power supply balances the electrical load without interruption.

  To provide power redundancy to the system both power supplies must be installed. Connect power source feed A to one power supply and power source feed B to the second power supply.

  CAUTION: **Do not connect feed A and feed B to the same power supply input terminal.**

- Cooling system—The 1 U models of QFX5100 line of switches have five fan modules; the 2 U QFX5100-96S has three fan modules. If a fan module fails and is unable to keep the QFX5100 switch within the desired temperature thresholds, chassis alarms occur and the QFX5100 switch can shut down.

Related Documentation

- AC Power Supply for a QFX5100 Device on page 94
- DC Power Supply in a QFX5100 Device on page 96
- Cooling System and Airflow in a QFX5100 Device on page 88

Chassis Physical Specifications for a QFX5100 Device

The QFX5100 switch chassis is a rigid sheet-metal structure that houses the hardware components. Table 11 on page 76 summarizes the physical specifications of the QFX5100 chassis.

Table 11: Physical Specifications for the QFX5100 Switch Chassis

Product SKU	Height	Width	Depth	Weight
QFX5100-24Q	1.72 in. (4.3 cm)	17.36 in. (44.1 cm)	20.48 in. (52 cm)	With FRUs installed: 22 lbs (9.97 kg)
QFX5100-24Q-AA	1.72 in. (4.3 cm)	17.36 in. (44.1 cm)	20.48 in. (52 cm)	With FRUs installed: 25 lbs (11.4 kg)
QFX5100-48S and QFX5100-48SH	1.72 in. (4.3 cm)	17.36 in. (44.1 cm)	20.48 in. (52 cm)	With FRUs installed: 21.8 lbs (9.8 kg)
QFX5100-48Tand QFX5100-48TH	1.72 in. (4.3 cm)	17.36 in. (44.1 cm)	21.47 in. (54.5 cm)	With FRUs installed: 24.79 lbs (11.2 kg)
QFX5100-96S	3.46 in. (8.8 cm)	17.36 in. (44.1 cm)	22.44 in. (57 cm) (not including handles for Fans and PSUs)	With FRUs installed: 32 lbs (14.5 kg)

Copyright © 2018, Juniper Networks, Inc.

Related Documentation

- Rack Requirements for a QFX5100 Device on page 232
- Cabinet Requirements for a QFX5100 Device on page 240
- Mounting a QFX5100 Device in a Rack or Cabinet on page 435
- Installing and Connecting a QFX5100 Device on page 433
- Installing and Removing QFX5100 Device Hardware Components on page 665

Port Panel of QFX5100-48S and QFX5100-48SH Devices

The port panel of the QFX5100-48S and QFX5100-48SH switches supports up to a maximum of 72 logical 10 GbE ports when operating as a standalone switch. Forty-eight physical ports(**0** through **47**) support 10 Gigabit Ethernet small form-factor pluggable plus (SFP+) transceivers. These ports can also support 1 Gigabit SFP transceivers and can be configured at either 1 Gbps or 1 Gbps speeds using the **set interface speed** command. All 48 of these ports can be used for SFP+ transceivers or SFP+ direct attach copper (DAC) cables. You can use 1-Gigabit Ethernet SFP+, 10-Gigabit Ethernet SFP+ transceivers and SFP+ DAC cables in any access port.

The remaining 24 logical ports are the six 40 GbE physical ports (**48** through **53**) that support up to 6 quad small-form factor pluggable plus (QSFP+) transceivers . Each QSFP+ socket can operate either as a single 40 Gbps port or as a set of 4 independent 10 Gbps ports using QSFP+ breakout cables. The 40 GbE ports can be configured as either access ports or as uplinks.

CAUTION: **Do not place a copper transceiver in an access port directly above or below another copper transceiver. Internal damage to the access ports and switch can occur. We recommend either using the top port row exclusively, or bottom port row exclusively, for copper transceivers.**

To connect a QFX5100-48S switch as a node device in a QFabric system, you need:

- Four QSFP+ uplink ports on each QFX5100-48S Node device to connect to the data plane network through the QFX3008-I or QFX5100-24Q Interconnect devices.
- The two remaining QSFP+ uplink ports on each QFX5100-48S Node device connect to the data plane network through the QFX3008-I or QFX5100-24Q Interconnect devices. See *Determining Interface Support for the QFX5100 Device*.

To connect a QFX5100-48S switch as a member in a QFX Virtual Chassis, you need a pair of dedicated ports and cables that link each member in the Virtual Chassis into a ring topology. Each member in the ring has at least one direct Virtual Chassis port (VCP) connection to a upstream and downstream member. QFX5100-48S switches are recommended in the master, backup, or line card role. When mixed with QFX3500 or QFX3600 devices, configure the QFX5100-48S in the master and backup roles. See *Connecting QFX Series and EX Series Switches in a QFX Virtual Chassis* for cabling diagrams.

Copyright © 2018, Juniper Networks, Inc.

To connect a QFX5100-48S switch as a spine or leaf device in a QFX5100 Virtual Chassis Fabric (VCF), you need a pair of dedicated ports and cables that link each spine device and leaf device in the VCF. All spine devices have at least one direct VCP connection to each leaf device in the VCF. See *Connecting a QFX5100 Device in a Virtual Chassis Fabric* for a cabling diagram.

BEST PRACTICE: In a mixed QFX5100 VCF environment with multiple models of QFX5100 and the EX4300, use QFX5100-24Q as spine devices. In the maximum configuration of 20 total devices, up to four QFX5100-24Q devices may be used as spine devices. All members can be connected to the spine using QSFP+ ports. You can configure the QFX5100-96S as a spine in an all QFX5100-96S VCF or in a mixed VCF comprised of EX4300 and QFX5100-96S.

As of Junos OS release 17.3R1, you can also connect a QFX5100-48S as a leaf device in a QFX5110 VCF or as a member in a QFX5110 Virtual Chassis.

Figure 44 on page 78 shows the port panel of a QFX5100-48S switch.

Figure 44: QFX5100-48S Switch Port Panel

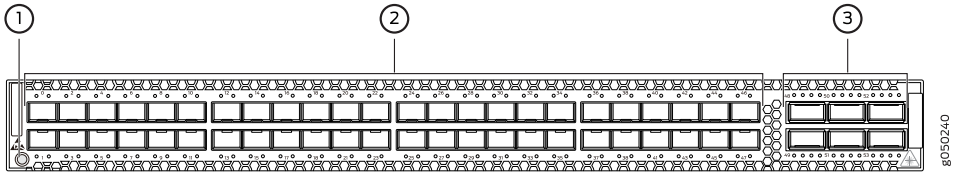

1—Electrostatic Discharge (ESD) terminal	3—40 GbE ports (6)
2—10 G ports (48)	

The QFX5100-48S and QFX5100-48SH device ports, (**0** through **47**) support:

- SFP transceivers that can run at either 100 Mbps or 1 Gbps speed
- SFP+ transceivers at 10 Gbps speed
- SFP to SFP direct attach copper (DAC) cables
- SFP+ to SFP+ DAC cables
- SFP+ to SFP+ active optical cables (AOC)

The QFX5100-48S and QFX5100-48SH 40 G uplink or data ports (**48** through **53**) support:

- QSFP+ transceivers
- QSFP+ to QSFP+ direct attach copper (DAC) cables
- QSFP+ to SFP+ DAC breakout cables (DACBO)
- QSFP+ to QSFP+ active optical cables (AOC)
- QSFP+ to SFP+ AOC breakout cables (AOCBO)

Copyright © 2018, Juniper Networks, Inc.

Related Documentation

- Field-Replaceable Units in a QFX5100 Device on page 75
- Port Panel of a QFX5100-24Q Device on page 81
- *Port Panel of a QFX5100-96S Device*
- Access Port and Uplink Port LEDs on a QFX5100 Device on page 741
- Installing and Removing QFX5100 Device Hardware Components on page 665

Port Panel of QFX5100-48T and QFX5100-48TH Devices

The port panel of the QFX5100-48T and QFX5100-48TH devices supports 48 10GBASE-T ports and 6 quad small-form factor pluggable (QSFP+) ports. Forty-eight copper physical ports (**0** through **47**) are tri-speed and support up to 10-Gigabit Ethernet. These 10GbE/1GbE/100 Mbps ports can be configured as access ports. See *Determining Interface Support for the QFX5100 Device*.

The remaining six ports (**48** through **53**), support 40 GbE QSFP+ transceivers. Each QSFP+ socket can operate either as a single 40 Gbps port or as a set of 4 independent 10 Gbps ports using QSFP+ breakout cables. The 40 GbE ports can be configured as either access ports or as uplinks.

To connect a QFX5100-48T device as a member in a QFX Virtual Chassis, you need a pair of dedicated ports and cables that link each member in the Virtual Chassis into a ring topology. Each member in the ring has at least one direct Virtual Chassis port (VCP) connection to a upstream and downstream member. QFX5100-48T switches are recommended in the master, backup, or line card role. When mixed with QFX3500 or QFX3600 devices, configure the QFX5100-48T device in the master and backup roles. See *Connecting QFX Series and EX Series Switches in a QFX Virtual Chassis* for cabling diagrams.

To connect a QFX5100-48T device as a leaf device in a Virtual Chassis Fabric (VCF), you need a pair of dedicated ports and cables that link each spine device and leaf device in the VCF. All spine devices have at least one direct VCP connection to each leaf device in the VCF. See *Connecting a QFX5100 Device in a Virtual Chassis Fabric* for a cabling diagram.

The QFX5100-48T device operates as a standalone switch, a member of a QFX Virtual Chassis, a member of a QFX5110 Virtual Chassis, act as a leaf device in a Juniper Networks Virtual Chassis Fabric (VCF). QFX Virtual Chassis and QFX5100 Virtual Chassis both support up to 10 members. VCF supports 20 total devices, of which 4 QFX5100-24Q devices can be configured as spine devices.

BEST PRACTICE: **Use the QFX5100-24Q as a spine device and any QFX5100 device (except QFX5100-24Q-AA, QFX5100-48TH, or QFX510048SH) as leaf devices.**

Figure 45 on page 80 shows the port panel of a QFX5100-48T or QFX5100-48TH device.

Figure 45: QFX5100-48T or QFX5100-48TH Switch Port Panel

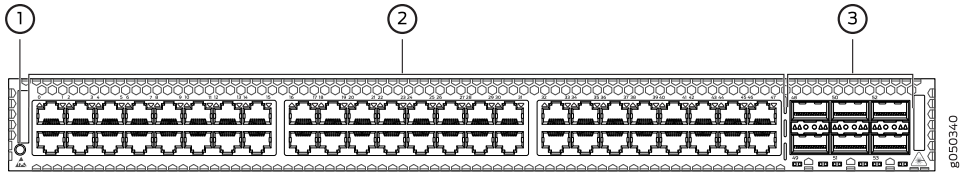

1—Electrostatic Discharge (ESD) terminal	3—40 GbE ports (6)
2—10GBASE-T ports (48)	

The QFX5100-48T and QFX5100-48TH device ports, (**0** through **47**) support RJ45 connectors. The 40 G uplink or data ports (**48** through **53**) support:

- QSFP+ transceivers
- QSFP+ to QSFP+ direct attach copper (DAC) cables
- QSFP+ to SFP+ DAC breakout cables (DACBO)
- QSFP+ to QSFP+ active optical cables (AOC)
- QSFP+ to SFP+ AOC breakout cables (AOCBO)

To connect a QFX5100-48T switch as a Node device in a QFabric system, you need:

- Four QSFP+ uplink ports on each QFX5100-48T Node device to connect to the data plane network through the QFX3008-I or QFX5100-24Q Interconnect devices.
- The two remaining QSFP+ uplink ports on each QFX5100-48T Node device connect to the data plane network through the QFX3008-I or QFX5100-24Q Interconnect devices.

Access port pinouts for the QFX5100-48T switch are the same as the management port connector pinouts for the QFX Series. For more information, see "Management Port Connector Pinouts for the QFX Series" on page 260.

Related Documentation

- Access Port and Uplink Port LEDs on a QFX5100 Device on page 741
- Field-Replaceable Units in a QFX5100 Device on page 75
- Port Panel of a QFX5100-24Q Device on page 81
- Port Panel of QFX5100-48S and QFX5100-48SH Devices on page 77
- *Port Panel of a QFX5100-96S Device*
- Installing and Removing QFX5100 Device Hardware Components on page 665
- *Connecting QFX Series and EX Series Switches in a QFX Virtual Chassis*
- *Connecting a QFX5100 Device in a Virtual Chassis Fabric*
- Management Port Connector Pinouts for the QFX Series on page 260

Copyright © 2018, Juniper Networks, Inc.

Port Panel of a QFX5100-24Q Device

The port panel of the QFX5100-24Q device consists of 24 quad small-form factor pluggable plus (QSFP+) ports. Each QSFP+ socket can be configured to support 40 GbE or as a set of 4 independent 10 GbE ports using breakout cables (channelization mode). In standalone mode, any of the 24 ports **0** through **23** can be configured as either uplink or access ports. The QFX5100-24Q device has two module bays for the optional expansion modules, QFX-EM-4Q or EX4600-EM-8F. The QFX-EM-4Q, can add a total of 8 additional QSFP+ ports to the chassis and the EX4600-EM-8F can provide 8 additional 10-Gigabit Ethernet Enhanced Small Form-Factor Pluggable (SFP+) ports. The QFX-EM-4Q ports can also be configured as either access ports or as uplinks, but only ports 0 and 2 can be channelized using port mode. Figure 46 on page 81 shows the port panel of the QFX5100-24Q device.

Figure 46: QFX5100-24Q Device Port Panel

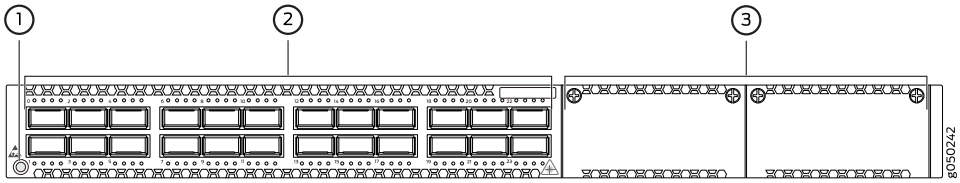

1—Electrostatic Discharge (ESD) terminal	3—Expansion module bays with cover panels (2)
2—QSFP+ access interface or uplink ports (24)	

- Switch Ports on page 81
- QFabric Systems on page 82
- Channelizing Interfaces (Non-QFabric) on page 82
- Virtual Chassis and Virtual Chassis Fabric on page 83
- Port LEDs on page 83

Switch Ports

The QFX5100-24Q device ports, (**0** through **23**) support:

- 40 Gbps QSFP+ transceivers
- QSFP+ to QSFP+ direct attach copper (DAC) cables
- QSFP+ to SFP+ direct attach copper break out (DACBO) cables
- QSFP+ to QSFP+ active optical cables (AOC)
- QSFP+ to SFP+ active optical breakout cable (AOCBO)
- Access ports

  You can use 40-Gigabit Ethernet QSFP+ transceivers and QSFP+ direct attach copper cables in any downstream port. See *Determining Interface Support for the QFX5100 Device*.

- Uplink ports

  You can configure up to 4 of the 40 GbE ports as uplinks. Each additional QFX-EM-4Q, Expansion Module adds the switch uplink capacity by 2 for a total of 8 uplinks.

  To connect a QFX5100-24Q switch as a Node device in a QFabric system, you need:

  - Four QSFP+ uplink ports on each QFX5100-24Q Node device to connect to the data plane network through the QFX3008-I or QFX5100-24Q Interconnect devices.
  - Two additional QSFP+ uplink ports on each QFX5100-24Q Node device connect to the data plane network through the QFX3008-I or QFX5100-24Q Interconnect devices. .

QFabric Systems

The QFX5100-24Q operates as a Node device in both the QFX3000-G and QFX3000-M QFabric systems. Additionally, the QFX5100-24Q can be configured as an Interconnect Device in QFX3000-M QFabric systems allowing a maximum of 16 Node devices. The QFX5100-24Q may not be mixed with QFX3600-I Interconnect devices in the same QFabric system.

When operating as a Node device, ports **0** through **7** are default FTE ports; ports **8** through **15** can be configured as either uplink (FTE) or access ports (XLE). In the port range **8** through **23**, only 12 ports can be channelized when the 2 QFX-EM-4Q are installed.

NOTE: **The EX4600-EM-8S expansion module is not supported on the QFX5100-24Q device in a QFabric system.**

Channelizing Interfaces (Non-QFabric)

When fully populated with 2 QFX-EM-4Q Expansion Modules, the QFX5100-24Q device has 128 physical ports. However, only 104 logical ports can be used for port channelization. Depending on the system mode you configure for channelization, different ports are restricted. If you attempt to channelize a restricted port, the configuration is ignored. The following system modes are available on the QFX5100-24Q device:

- Default mode

  All 24 QSFP+ ports on the switch (PIC 0) are channelized by default (96 ports). With QFX-EM-4Q Expansion Modules (PIC 1) and (PIC 2), the QSFP+ ports are supported for access or uplink ports, but cannot be channelized. Ports are over-subscribed In this mode and could be subject to packet-loss. You can have one of two port combinations: 32 40-Gbps QSFP+ ports, or 96 10-Gigabit Ethernet ports plus 8 40-Gbps QSFP+ ports.

- 104 port mode

  All 24 QSFP+ ports on the switch (PIC 0) are channelized (96 ports). Two ports on QFX-EM-4Q Expansion Module (PIC 1) are also channelized (8 additional). In this mode, ports 0 and 2 are channelized by default and ports 1 and 3 are disabled. If

Copyright © 2018, Juniper Networks, Inc.

additional QSFP+ ports are detected in an expansion module (PIC 2), those ports are ignored.

- Flexi-pic mode

  Ports 0 through 3 of the switch cannot be channelized; ports 4 through 24 are channelized by default (80 ports). With QFX-EM-4Q Expansion Modules (PIC 1) and (PIC 2), the QSFP+ ports are supported for access or uplink ports, but cannot be channelized. With EX4600-EM-8F Expansion Modules installed (PIC 1) and (PIC 2), the 16 SFP+ ports of SFP are recognized for a total of 96 logical ports.

- Non-oversubscribed mode

  All 24 QSFP+ ports on the switch (PIC 0) are channelized (96 ports). Expansion modules on PIC 1 and PIC 2 are not supported and cannot be channelized. There is no packet loss for packets of any size in this mode.

Virtual Chassis and Virtual Chassis Fabric

The QFX5100-24Q device operates as a standalone switch, a member of a QFX Virtual Chassis, or as a spine or leaf device in a QFX5100 Virtual Chassis Fabric (VCF). QFX Virtual Chassis support up to 10 members. QFX5100 VCF supports 20 QFX5100 and EX4300 devices, of which 4 QFX5100 devices can be configured as spines.

To connect a QFX5100-24Q device as a member in a QFX Virtual Chassis, you need to cable a pair of ports to link each member in the Virtual Chassis into a ring topology. Each member in the ring has at least one direct Virtual Chassis port (VCP) connection to each directly connected member. QFX5100-24Q devices are recommended in the master, backup, or line card role. When mixed with QFX3500 or QFX3600 devices, configure the QFX5100-24Q device in the master and backup roles. See *Connecting QFX Series and EX Series Switches in a QFX Virtual Chassis* for cabling diagrams. The Virtual Chassis feature is not applicable to QFX devices in a QFabric.

To connect a QFX5100-24Q device as a spine or leaf device in a QFX5100 VCF, you need to cable a set of ports as VCP connections that link each spine device and leaf device. All spine devices have at least one direct VCP connection to each leaf device in the VCF. Non-channelized DAC cables can be configured as VCP connections. See *Connecting a QFX5100 Device in a Virtual Chassis Fabric* for a cabling diagram.

BEST PRACTICE: **Whenever possible use the QFX5100-24Q device as a spine device. By using the QFX5100-24Q device in a maximum configuration of 20 total devices, four QFX5100-24Q devices may be used as spine devices. All members can be connected to the spine using QSFP+ ports.**

As of Junos OS release 17.3R1, you can also connect a QFX5100-24Q as a leaf device in a QFX5110 VCF or as a member in a QFX5110 Virtual Chassis.

Port LEDs

The bi-color LEDs labeled Link/Activity LED in Figure 47 on page 84 indicate link activity or faults.

Figure 47: LEDs on the QSFP+ Uplink Ports

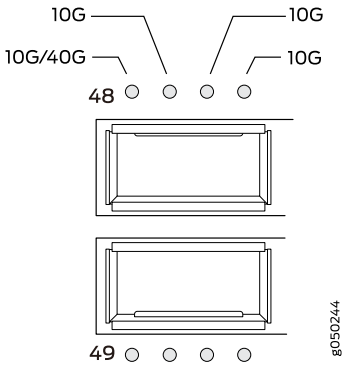

Table 12 on page 84 describes the SFP+ access port LEDs.

Table 12: Port LEDs on a QFX5100-24Q Switch

Color	State	Description
Unlit	Off	The port is administratively disabled, there is no power, or there is a fault. NOTE: When configured for channelized 10-Gigabit Ethernet, the LED remains unlit only if all four of the 10-Gigabit Ethernet SFP+ breakout links are down.
Green	On steadily	A link is established, but there is no link activity. NOTE: When configured for channelized 10-Gigabit Ethernet, the LED is lit green when at least one of the four 10-Gigabit Ethernet SFP+ breakout links is established.
	Blinking	A link is established, and there is link activity. NOTE: When configured for channelized 10-Gigabit Ethernet, the LED is lit green when at least one of the four 10-Gigabit Ethernet SFP+ breakout links is established.
Amber	Blinking	All four LEDs blink to indicate the beacon function was enabled on the port.

Related Documentation

- Field-Replaceable Units in a QFX5100 Device on page 75
- Port Panel of QFX5100-48S and QFX5100-48SH Devices on page 77
- *Port Panel of a QFX5100-96S Device*
- *Channelizing Interfaces Overview*
- Access Port and Uplink Port LEDs on a QFX5100 Device on page 741
- Installing and Removing QFX5100 Device Hardware Components on page 665
- *Connecting QFX Series and EX Series Switches in a QFX Virtual Chassis*

Copyright © 2018, Juniper Networks, Inc.

- *Connecting a QFX5100 Device in a Virtual Chassis Fabric*

Management Panel of a QFX5100 Device

The management panel of the QFX5100 switch is found on the Field Replaceable Unit (FRU) end of the switch as shown in Figure 48 on page 85 for 1 U switches and Figure 49 on page 85 for the 2 U , QFX5100-96S switch. See Figure 50 on page 85 and Figure 51 on page 86 for FRUs and management panel detail.

Figure 48: QFX5100 Switch, FRU End 1 U Product SKUs

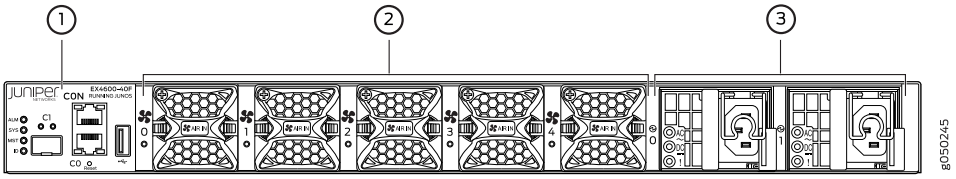

1— Management panel	3—Power supply units
2—Fan modules	

Figure 49: QFX5100-96S, FRU End

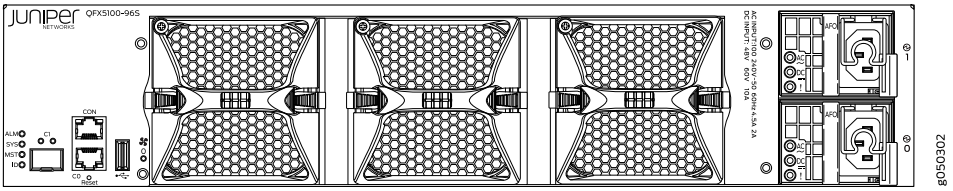

Figure 50: Management Panel Components on 1 U QFX5100

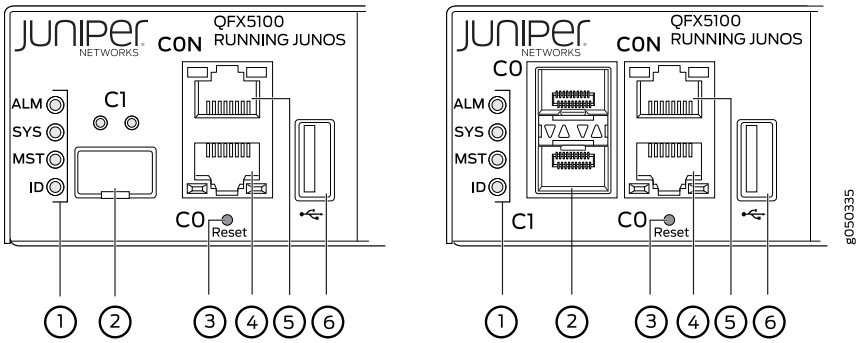

1— Status LEDs	4—em0–RJ-45 (1000 Base-T) management Ethernet port (**C0**) Some SKUs have an additional SFP management Ethernet port (second **C0**)
2—em1–SFP management Ethernet port (**C1**) Cage (socket for either 1 GbE copper SFP or fiber SFP)	5—RJ-45 console port (**CON**))
3—**Reset** button, see caution statement below	6—USB port

CAUTION: Do not use the **Reset** button to restart the power sequence unless under the direction of Juniper Networks Technical Assistance Center (JTAC).

Figure 51: Management Panel Components on the QFX5100-96S

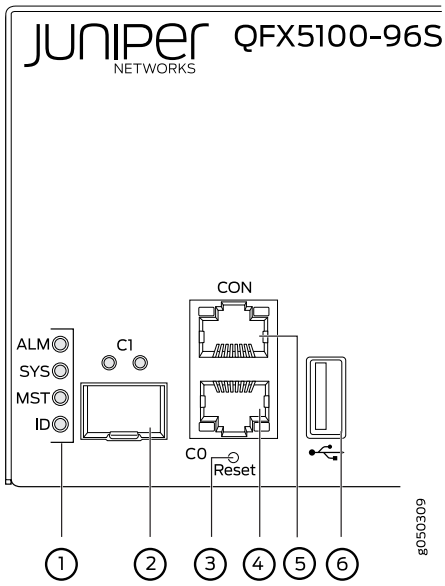

1— Status LEDs	4—em0–RJ-45 (1000 Base-T) management Ethernet port (C0)
2—em1–SFP management Ethernet port (C1) Cage (socket for either 1 GbE copper SFP or fiber SFP)	5—RJ-45 console port (C0N))
3—**Reset** button, see caution statement above	6—USB port

The management panel consists of the following components:

- Status LEDs
  - ALM–Alarm
    - Unlit indicates the switch is halted or that there is no alarm.
    - Red indicates a hardware fault, such as a power failure or a system shutdown due to system over-heating.
    - Amber indicates a major or minor alarm.
  - SYS–System
    - Unlit indicates the switch is powered off or halted.
    - Solid green indicates that Junos OS for QFX Series is loaded on the switch.
    - Blinking green indicates the switch is:
      - A participating member in a Virtual Chassis.
      - A participating leaf device in a Virtual Chassis Fabric (VCF).

Copyright © 2018, Juniper Networks, Inc.

        - A participating spine device in a VCF.
        - A Routing Engine Master in a VCF.
        - A Routing Engine Backup in a VCF.
    - MST–Master in a QFX Virtual Chassis or Routing Engine Master in a VCF
        - Unlit indicates the switch is a linecard member in a Virtual Chassis.
        - Solid green indicates the switch is:
            - A standalone switch
            - In the master role in a QFX Virtual Chassis
            - Is the routing engine master in a VCF
        - Blinking green indicates the switch is the backup master in a Virtual Chassis or the backup routing engine in a VCF.
    - ID–Identification or beacon
        - Unlit indicates the beacon feature is not enabled.
        - Blinking blue indicates the beacon feature is enabled. This feature is enabled using the **request chassis beacon** command.
- Switch product number
- Management Ports C0 and C1
    - C0–Use the RJ-45 connectors for 10/100/1000 BaseT or to cable a virtual management Ethernet (VME) interface for spine members in a VCF. See *Connecting a QFX5100 Device to a Network for Out-of-Band Management*.

      NOTE: **For product SKUs with C0 available in both copper and fiber, the copper C0 has priority over fiber C0.**
    - C1–Use the SFP connector for 1000 BaseX.
- USB port for image updates.
- Console port (RJ-45) to support RS-232 serial ports. The LEDs above the port indicate status and link.

Related Documentation

- Field-Replaceable Units in a QFX5100 Device on page 75
- Chassis Status LEDs on a QFX5100 Device on page 737
- USB Port Specifications for the QFX Series on page 257
- Cooling System and Airflow in a QFX5100 Device on page 88
- AC Power Supply for a QFX5100 Device on page 94
- Prevention of Electrostatic Discharge Damage on page 360

Copyright © 2018, Juniper Networks, Inc.

- Installing and Removing QFX5100 Device Hardware Components on page 665
- *Connecting a QFX5100 Device to a Network for Out-of-Band Management*

Cooling System and Airflow in a QFX5100 Device

The cooling system in an QFX5100 device consists of fan modules and a single fan in each power supply. The number of fan modules vary depending whether the size of the switch is 1 U or 2 U high. All switches can be set up to work in one of two airflow directions:

- Airflow In—Air comes into the switch through the vents in the field-replaceable units (FRUs)
- Airflow Out—Air comes into the switch through the vents in the port panel.

CAUTION: **Airflow In and Airflow Out fans and power supplies cannot be mixed in the same chassis.**

- Fan Modules on page 88
- Do Not Install Components with Different Airflow or Wattage in the Switch on page 92
- Fan Module Status on page 93

Fan Modules

The fan modules in QFX5100 devices are hot-insertable and hot-removable field-replaceable units (FRUs). These fan modules are designed for one of the two available airflow directions (Airflow In or Airflow Out). Some fan modules are also color-coded for the airflow direction as well. The fan modules are installed in the fan module slots on the management panel of the switch next to the power supplies.

Both the 1 U and 2 U versions of QFX5100 fan modules have a similar design with different dimensions. The 1 U QFX5100 devices have 5 fan modules numbered 0 through 4 from left to right, where the 2 U, QFX5100-96S device, has 3 fan modules numbered 0 through 2. On all QFX5100 devices, each fan module slot has a fan icon next to it.

Figure 52 on page 89 shows the 1 U fan module and Figure 53 on page 89 shows the 2 U fan module.

 Copyright © 2018, Juniper Networks, Inc.

Figure 52: 1 U Fan Module Used in QFX5100 Switches

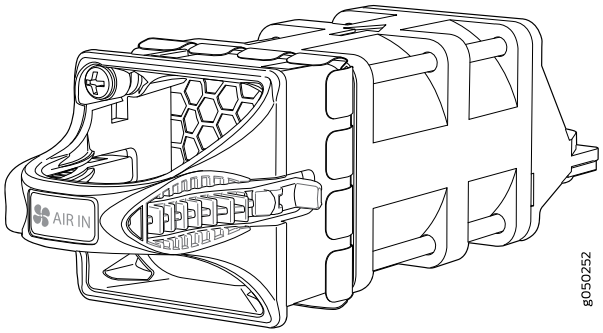

Figure 53: 2 U Fan Module Used in QFX5100-96S Switches

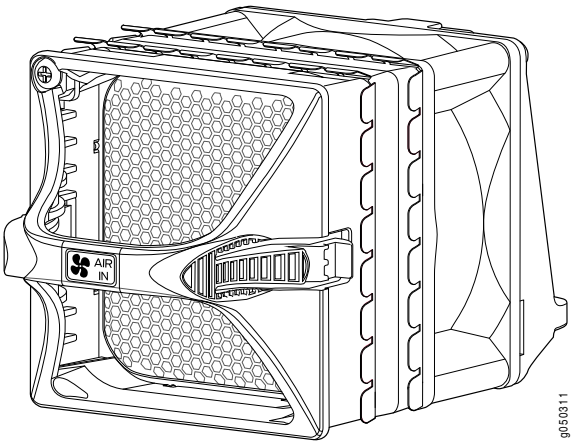

You remove and replace a fan module from the FRU end of the chassis. The switch continues to operate for a limited period of time (30 seconds) during the replacement of the fan module without thermal shutdown.

NOTE: **All fan modules must be installed for optimal operation of the switch.**

The fan modules are available in two product SKUs that have different airflow directions—FRU-to-port airflow, indicated on some units by the azure blue color or a label. FRU-to-port airflow versions of the fan module that have labels are marked **AIR IN** . Likewise, port-to-FRU airflow is indicated by either a gold color or the label **AIR OUT** . On legacy switches or switches with LCDs, this airflow is also called front-to-back and back-to-front. Table 13 on page 90 lists the available fan module product SKUs and the direction of airflow in them:

Table 13: Fan Modules in QFX5100 Switches

Fan Module	Product SKUs	Airflow Diagram	Label on the Fan Module	Color of Fan Module	Direction of Airflow in the Fan Module	Power Supplies
QFX5100-FAN-AFI	QFX5100-24Q QFX5100-48S QFX5100-48SH QFX5100-48T QFX5100-48TH	Figure 54 on page 91	**AIR IN**	Juniper Azure Blue	FRU-to-port, that is, air comes in from the end of the switch with the fans; air exhausts from the switch end with ports (also known as back-to-front airflow).	You must install only power supplies that have **AIR IN** labels in switches in which the fan modules have **AIR IN** labels.
QFX5100-96S-FANAFI	QFX5100-96S	Figure 55 on page 91				
QFX5100-FAN-AFO	QFX5100-24Q QFX5100-48S QFX5100-48SH QFX5100-48T QFX5100-48TH	Figure 56 on page 92	**AIR OUT**	Juniper Gold	Port-to-FRU, that is, air comes in through vents on the end with ports; air exhausts out the end with the fans (also known as front-to-back airflow).	You must install only power supplies that have **AIR OUT** labels in switches in which the fan modules have **AIR OUT** labels.
QFX5100-96S-FANAFO	QFX5100-96S	Figure 57 on page 92				

In data center deployments, position the switch in such a manner that the **AIR IN** labels on switch components are next to the cold aisle, and **AIR OUT** labels on switch components are next to the hot aisle.

Copyright © 2018, Juniper Networks, Inc.

Figure 54: Air In Airflow Through 1 U QFX5100 Switch Chassis

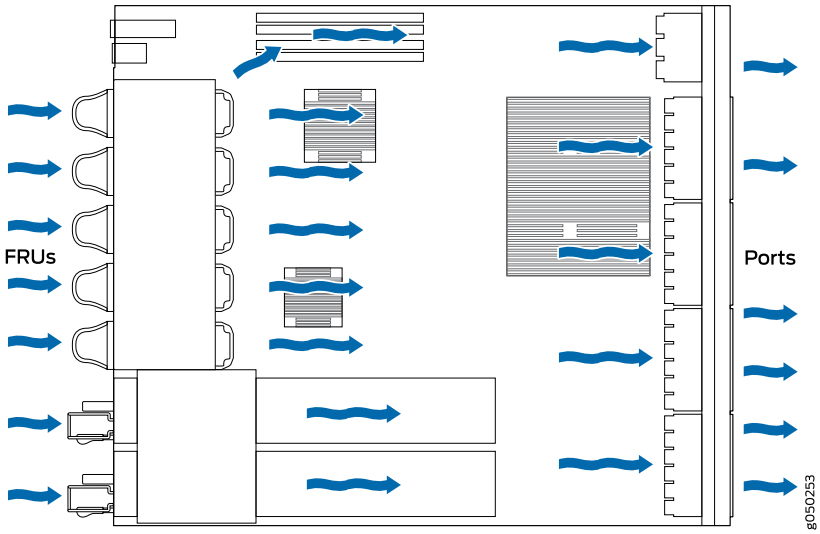

Figure 55: Air In Airflow Through 2 U QFX5100 Switch Chassis

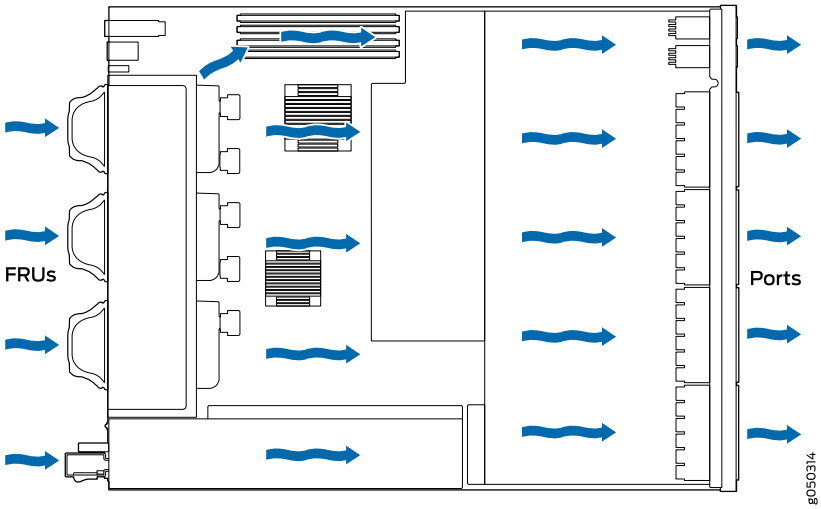

Figure 56: Air Out Airflow Through 1 U QFX5100 Switch Chassis

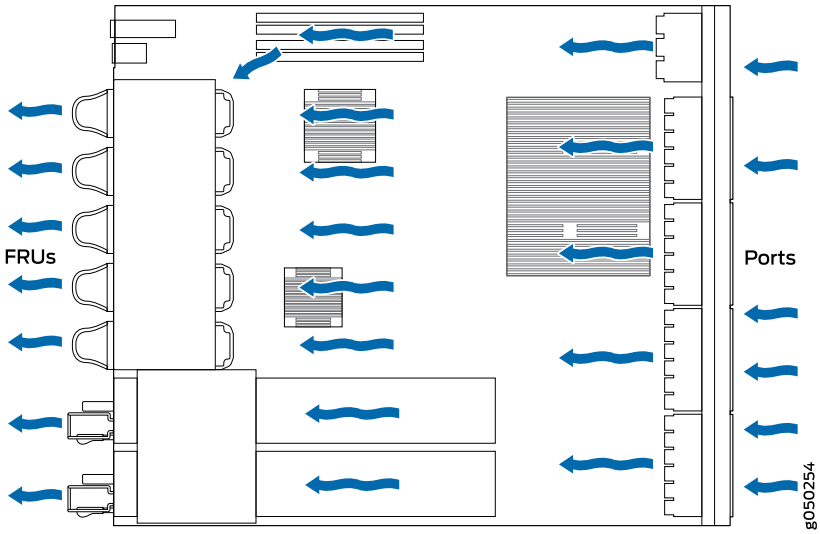

Figure 57: Air Out Airflow Through 2 U QFX5100 Switch Chassis

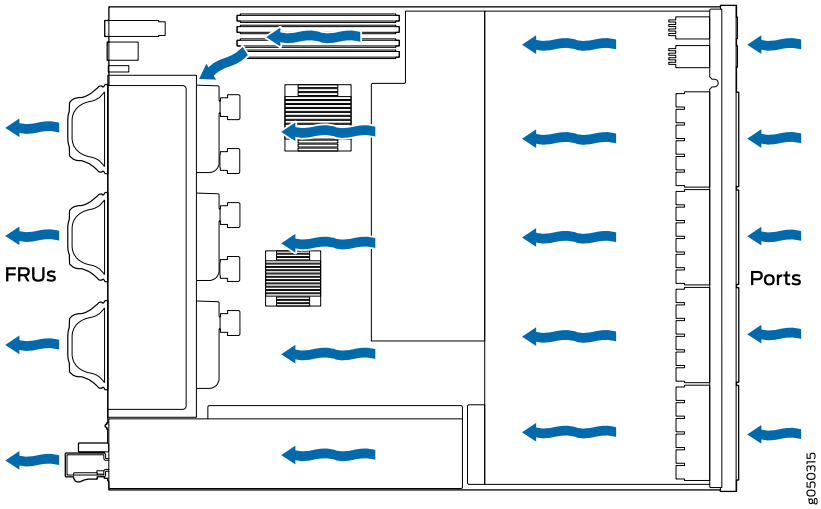

Do Not Install Components with Different Airflow or Wattage in the Switch

Do not mix power supplies with different airflow. If the power supplies are color-coded, ensure they are either all azure blue for airflow in models or all gold for airflow out models. If the power supplies are not color-coded but have a label, ensure that the chassis is either using all airflow in (**AFI**) or all airflow out (**AFO**). Likewise, ensure that all fan modules have the same airflow and match the airflow of the power supplies. Fan modules are also either color-coded azure blue for airflow in or gold for airflow out. If the fan module has a label instead of being color-coded, ensure that labels (**AIR IN** and **AIR OUT**) are not mixed. If the fan modules have **AIR IN** labels, the power supplies must also have **AIR IN** labels; if the fan modules have **AIR OUT** labels, the power supplies must also have **AIR OUT** labels.

Copyright © 2018, Juniper Networks, Inc.

Mixing components with different airflows in the same chassis hampers the performance of the cooling system of the switch and leads to overheating of the chassis.

CAUTION: **The system raises an alarm if a fan module fails or if the ambient temperature inside the chassis rises above the acceptable range. If the temperature inside the chassis rises above the threshold temperature, the system shuts down automatically.**

Do not mix fan modules with different wattage. Only use the replacement fan modules that are designed for use with your product number. See Table 13 on page 90 for the correct part number for your QFX5100 device.

CAUTION: **Do not mix AC and DC power supplies in the same chassis.**

However if you need to convert a QFX5100 device to have a different airflow, you can change the airflow pattern. To convert an **AIR IN** product SKU to an **AIR OUT** product SKU or an **AIR OUT** product SKU to a **AIR IN** product SKU, you must replace all of the fans and power supplies at one time to use the new direction. The system raises an alarm when the system is converted, which is normal.

Fan Module Status

You can check the status of fan modules through the **show system alarms** command or by looking at the LEDs next to each fan module.

Each switch has a Status LED (labeled **ST**) for each fan module on the left side of the corresponding fan module slot. It indicates the status of all the fan modules. Table 14 on page 93 describes the Status LED on the fan module in a QFX5100 device.

Table 14: Fan Module LED

LED State	Description
Solid Green	The individual fan module is present. After the hardware senses the fan module, software ensures the airflow is consistent with the other fan modules and that it is functioning correctly.
Blinking Amber	Indicates one of the following: • The fan module is not present. • The fan module is not functioning normally.

Under normal operating conditions, the fan modules operate at a moderate speed. Temperature sensors in the chassis monitor the temperature within the chassis.

The system raises an alarm if a fan module fails or if the ambient temperature inside the chassis rises above the acceptable range. If the temperature inside the chassis rises above the threshold temperature, the system shuts down automatically.

Copyright © 2018, Juniper Networks, Inc.

Related Documentation

- Field-Replaceable Units in a QFX5100 Device on page 75
- Prevention of Electrostatic Discharge Damage on page 360
- QFX5100 Device Hardware Overview on page 63
- Installing a Fan Module in a QFX5100 Device on page 677
- Removing a Fan Module from a QFX5100 Device on page 675

AC Power Supply for a QFX5100 Device

The two power supplies in QFX5100 switches are hot-removable and hot-insertable field-replaceable units (FRUs). The power supplies are installed in the switch at the factory. You can install replacement power supplies from the management panel without powering off the switch or disrupting the switching function.

The AC power supply in 1 U QFX5100 switches is 650 W; the AC power supply in the 2 U, QFX5100-96S switch, is 850 W. Both power supplies look identical. Be sure to use the correct power supply for your chassis product SKU (see Table 15 on page 96).

CAUTION: **Do not mix power supplies with different airflow or different wattage. The system raises an alarm when a power supply having a different airflow or wattage is inserted into the chassis.**

See Figure 58 on page 94 for an example of the 1 U design and Figure 59 on page 95 for an example of the 2 U power supply.

Figure 58: 1 U AC Power Supply in QFX5100 Switches

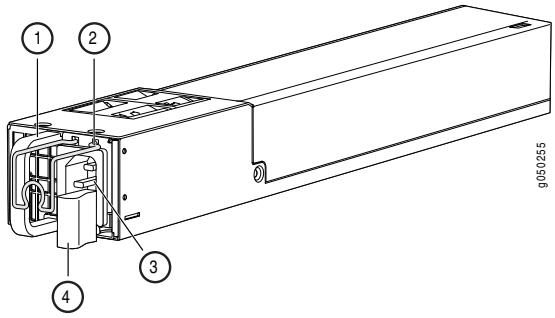

1—Handle	3—AC appliance inlet
2—Security latch	4—Ejector lever

Copyright © 2018, Juniper Networks, Inc.

Figure 59: 2 U AC Power Supply in a QFX5100-96S Switch

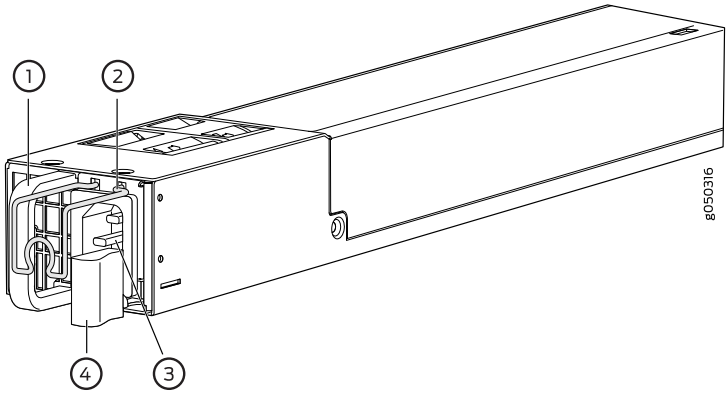

The power supply provides FRU-to-port or port-to-FRU airflow depending on the product SKU you purchase. On legacy switches, or switches with an LCD, this airflow is called back-to-front and front-to-back. The power supplies have color-coded handles with a fan icon. See Figure 60 on page 95 for an example of the power supply. A power supply with a blue handle denotes FRU-to-port airflow; a power supply with a gold-colored handle denotes port-to-FRU airflow.

Figure 60: Power Supply Handle Detail

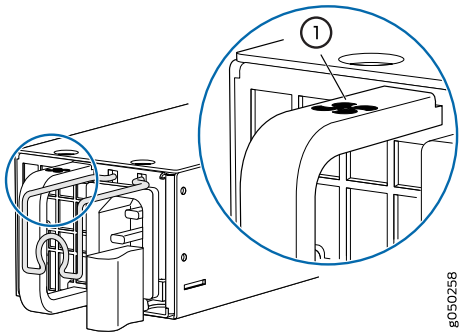

1— Fan icon on handle	

CAUTION: Verify that the airflow direction on the power supply handle matches the direction of airflow in the chassis. Ensure that each power supply you install in the chassis has the same airflow direction. If you install power supplies with two different airflow directions, Junos OS raises an alarm. If you need to convert the airflow pattern on a chassis, you must change out all the fans and power supplies at one time to use the new direction.

Table 15 on page 96 shows the different power supplies and their direction of airflow.

Table 15: Airflow Direction in QFX5100 AC Power Supplies

QFX5100 Product SKUs	Wattage	Product Number	Direction of Airflow	Color of Power Supply Handle
QFX5100-24Q QFX5100-48S QFX5100-48SH QFX5100-48T QFX5100-48TH	650 W	JPSU-650W-AC-AFI QFXC01-PWRACI-650A (older version)	FRU-to-port	Juniper Azure Blue
QFX5100-96S	850 W	JPSU-850W-AC-AFI		
QFX5100-24Q QFX5100-48S QFX5100-48SH QFX5100-48T QFX5100-48TH	650 W	JPSU-650W-AC-AFO QFXC01-PWRACO-650A (older version)	Port-to-FRU	Juniper Gold
QFX5100-96S	850 W	JPSU-850W-AC-AFO		

To avoid electrical injury, carefully follow instructions in "Connecting AC Power to a QFX5100 Device" on page 443.

Related Documentation

- AC Power Cord Specifications for a QFX Series Device on page 292
- AC Power Supply LEDs on a QFX5100 Device on page 745
- Management Panel of a QFX5100 Device on page 85
- Field-Replaceable Units in a QFX5100 Device on page 75
- AC Power Specifications for a QFX5100 Device on page 291
- Connecting AC Power to a QFX5100 Device on page 443

DC Power Supply in a QFX5100 Device

The power supplies in QFX5100 devices (see Figure 61 on page 97) are hot-removable and hot-insertable field-replaceable units (FRUs) that you can install in 1 U DC product SKUs of QFX5100 devices without powering off the device or disrupting the switching function.

The DC power supply in 1 U product SKUs of QFX5100 is 650 W with dual feeds for power resiliency. The DC power supply in the 2 U product SKU, QFX5100-96S, is 850 W with dual feeds for power resiliency. Both power supplies have a similar design. See

Copyright © 2018, Juniper Networks, Inc.

Figure 61 on page 97 for an example of the 1 U design and Figure 62 on page 97 for an example of the 2 U power supply.

Figure 61: DC Power Supply in QFX5100 Devices

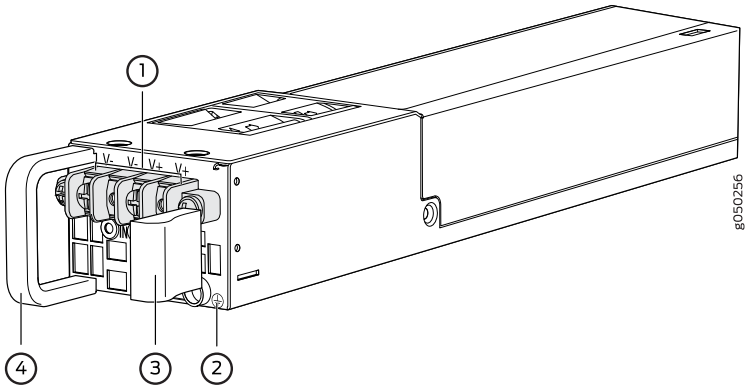

1—Terminal block	3—Ejector lever
2—ESD grounding point	4—Handle

To supply sufficient power for 1 U models, terminate the DC input wiring on a facility DC source that is capable of supplying a minimum of 7 A at –48 VDC.

Figure 62: DC Power Supply for QFX5100-96S Devices

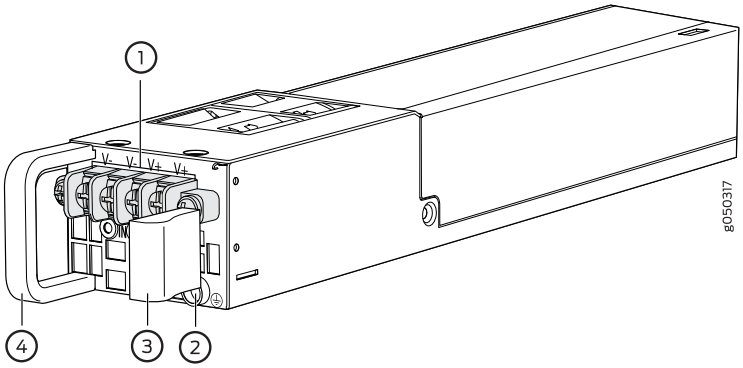

1—Terminal block	3—Ejector lever
2—ESD grounding point	4—Handle

NOTE: The DC power supply in the switch has four terminals labeled V-, V-, V+, and V+ (see Figure 63 on page 98) for connecting DC power source cables labeled positive (+) and negative (–).

Figure 63: DC Power Supply Faceplate in QFX5100 Devices

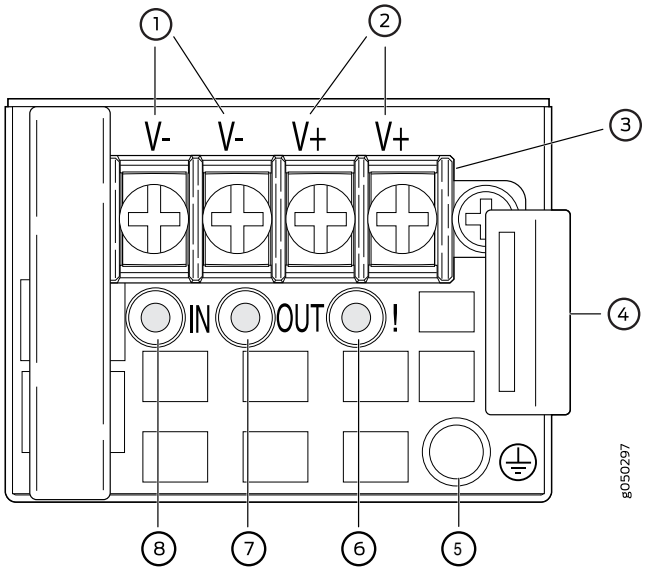

1—Shunt negative input terminals (-48V)	5—ESD grounding point
2—Shunt positive input terminals (+RTN)	6—Fault LED
3—Terminal block	7—Output LED
4—Ejector lever	8—Input LED

To avoid electrical injury, carefully follow instructions in "Installing a Power Supply in a QFX5100 Device" on page 668 and "Removing a Power Supply from a QFX5100 Device" on page 666.

Related Documentation

- DC Power Supply LEDs on a QFX5100 Device on page 746
- Management Panel of a QFX5100 Device on page 85
- Field-Replaceable Units in a QFX5100 Device on page 75
- DC Power Specifications for a QFX5100 Device on page 293
- Prevention of Electrostatic Discharge Damage on page 360
- Connecting DC Power to a QFX5100 Device on page 446

Copyright © 2018, Juniper Networks, Inc.

CHAPTER 5

QFX3600 Overview

- QFX3600 Device Overview on page 99
- Field-Replaceable Units for QFX3600 and QFX3600-I Devices on page 102
- Understanding Redundancy of QFX3600 and QFX3600-I Components and Functionality on page 103
- Chassis Physical Specifications for QFX3600 and QFX3600-I Devices on page 103
- Front Panel of a QFX3600 Device on page 104
- Rear Panel of QFX3600 and QFX3600-I Devices on page 106
- Cooling System and Airflow for QFX3600 and QFX3600-I Devices on page 107
- AC Power Supply for a QFX3500, QFX3600, or QFX3600-I Device on page 110
- DC Power Supply for a QFX3500, QFX3600, or QFX3600-I Device on page 112

QFX3600 Device Overview

The Juniper Networks QFX3600 device is a high-speed, multipurpose switch especially designed for next-generation data centers. The QFX3600 device can be configured as:

- A standalone switch
- A Node device in a QFX3000-M or QFX3000-G QFabric system
- An Interconnect device in a QFX3000-M QFabric system
- A member in a QFX Virtual Chassis
- A leaf node in a QFX5100 Virtual Chassis Fabric (VCF)

Sixteen 40-Gbps ports in the device use quad small form-factor pluggable plus (QSFP+) transceivers. The small form-factor and front facing ports in the switch make it suitable for deployment in high-density server racks and container-based data center deployments.

In a QFX3000-G QFabric system, the QFX3600 device can operate as a Node device through the 40-Gbps uplinks ports to a Juniper Networks QFX3008-I Interconnect device. On a QFX3000-M QFabric device, the QFX3600 can be configured to operate as either a Node device or as a QFX3600-I Interconnect device. When configured as a Node device in a QFX3000-M QFabric system, , the QFX3600 device can connect to either a QFX3600-I Interconnect device to a QFX5100-24Q through the 40-Gbps uplink ports.Together, the QFX3600 Node devices and Interconnect devices form a multistage,

Copyright © 2018, Juniper Networks, Inc.

nonblocking switch fabric that provides a high-performance, low-latency, unified interconnect solution for next-generation data centers.

The QFX3600 Node devices and QFX3008-I or QFX3600-I Interconnect devices are connected to Juniper Networks QFX3100 Director devices in a control plane and management network. The QFX3100 Director device presents the QFabric system devices as a single network entity, allowing for simplified management of your data center using the Junos OS command-line interface (CLI).

In a QFX Virtual Chassis, the QFX3600 device can participate with other QFX3600 devices or QFX3500 devices in a ring topology with up to 10 members.

In a QFX5100 Virtual Chassis Fabric, the QFX3600 device can participate as a leaf device. Up to a total of 32 devices can participate in the Virtual Chassis Fabric.

- Software on page 100
- Hardware on page 100

Software

QFX Series devices use the Junos operating system (OS), which provides Layer 2 and Layer 3 switching, routing, and security services. Junos OS is installed on the QFX3600 device's 8-gigabyte (GB) internal flash drive. The same Junos OS code base that runs on QFX Series devices also runs on all Juniper Networks EX Series, J Series, M Series, MX Series, and T Series devices.

For more information about which features are supported on QFX Series devices, see Feature Explorer.

When the QFX3600 device is operating as a standalone switch, you manage the switch using the Junos OS command-line interface (CLI), accessible through the console and out-of-band management ports on the device.

When a QFX Series device operates as part of a QFabric system, all the devices in the data center fabric are managed through the Administrator software installed on the QFX3100 Director devices. Each device in a QFabric system is interconnected in a single control plane and management network, using the redundant management ports on each device.

Hardware

The compact QFX3600 chassis is 1 rack unit (1 U) in size and designed to fit in industry-standard 19-inch rack-mount enclosures, as well as high-density server racks and container-based data center deployments. See Figure 64 on page 101 and Figure 65 on page 101 and "Chassis Physical Specifications for QFX3600 and QFX3600-I Devices" on page 103.

Copyright © 2018, Juniper Networks, Inc.

Figure 64: QFX3600 Chassis Front

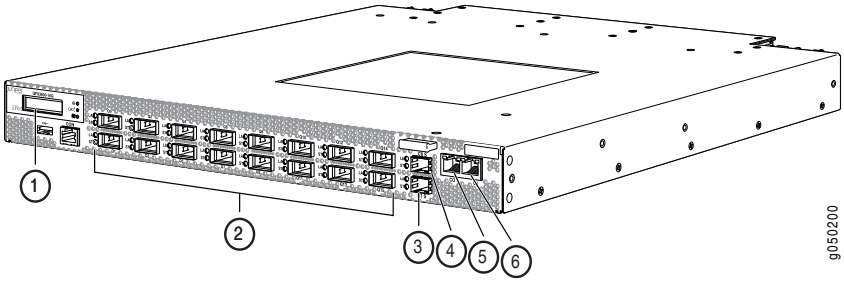

1—LCD panel	4—**C0S** 1-Gbps SFP management port
2—QSFP+ ports	5—**C0** 1000BASE-T RJ-45 management port
3—**C1S** 1-Gbps SFP management port	6—**C1** 1000BASE-T RJ-45 management port

Figure 65: QFX3600 Chassis Rear

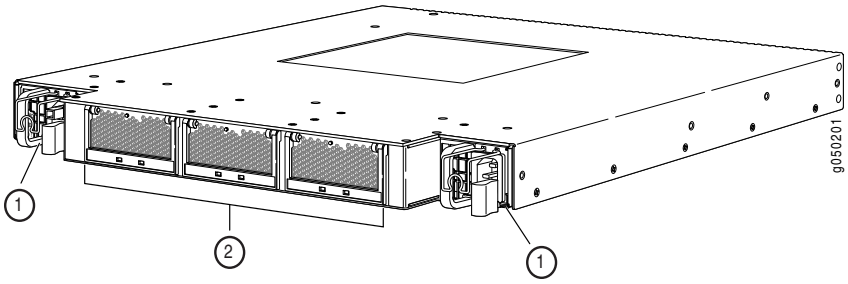

1—Power supplies	2—Fan trays

The front panel of the QFX3600 chassis has an LCD panel that displays the device hostname and the number of active alarms. It also has sixteen 40-Gbps ports labeled **Q0** through **Q15** that support quad small form-factor pluggable plus (QSFP+) transceivers. See "Front Panel of a QFX3600 Device" on page 104.

If you are using the QFX3600 device as a Node device in a QFabric system, by default, four ports (labeled **Q0** through **C3**) are configured for uplink connections between your QFX3600 Node device and your Interconnect device, and twelve ports (labeled **Q4** through **Q15**) support 48 10-Gigabit Ethernet or 12 40-Gigabit Ethernet interfaces for connections to either endpoint systems (such as servers and storage devices) or external networks. Optionally, you can choose to configure the first eight ports (labeled **Q0** through **Q7**) for uplink connections between your QFX3600 Node device and your Interconnect device and ports **Q2** through **Q15** for 10-Gigabit Ethernet or 40-Gigabit Ethernet connections to either endpoint systems or external networks. See "Configuring the Port Type on QFX3600 Node Devices" on page 714 and *Determining Interface Support for the QFX3600 Device*.

If you are using the QFX3600 device as a standalone switch, by default, all 16 QSFP+ ports (**Q0** through **Q15**) are configured as 40-Gigabit Ethernet (*xle*) ports. Optionally, you can choose to configure each port to operate as 10-Gigabit Ethernet (*xe*) ports. Port **00** is unique because the number of ports you can specify as 10-Gigabit Ethernet varies by Junos OS release. In some Junos OS releases, port **00** has a reserved port and in other

releases, the port is available. See the topics on channelizing interfaces or configuring the port type for your specific software release.

The rear panel of the QFX3600 chassis has two redundant power supplies and three redundant fan trays that are field-replaceable and hot-swappable. See "Rear Panel of QFX3600 and QFX3600-I Devices" on page 106.

Related Documentation

- Field-Replaceable Units for QFX3600 and QFX3600-I Devices on page 102
- Site Preparation Checklist for a QFX3600 or QFX3600-I Device on page 212
- Installing and Removing QFX3600 or QFX3600-I Device Hardware Components on page 657

Field-Replaceable Units for QFX3600 and QFX3600-I Devices

Field-replaceable units (FRUs) are components that you can replace at your site. QFX3600 and QFX3600-I device FRUs are hot-insertable and hot-removable: you can remove and replace them without powering off the device or disrupting the switching function.

CAUTION: **Replace a failed power supply with a blank panel or new power supply within 1 minute of removal to prevent chassis overheating. Replace a failed fan tray with a new fan tray within 1 minute of removal to prevent chassis overheating.**

Table 16 on page 102 lists the FRUs for QFX3600 and QFX3600-I devices and actions to take before removing them.

Table 16: Field-Replaceable Units for QFX3600 and QFX3600-I Devices

FRU	Required Action
Power supplies	None.
Fan trays	None.
Optical transceivers	None. We recommend that you disable the interface using the **set interfaces *interface-name* disable** command before you remove the transceiver. See "Disconnecting a Fiber-Optic Cable from a QFX Series Device" on page 711.

NOTE: **If you have a Juniper J-Care service contract, register any addition, change, or upgrade of hardware components at https://www.juniper.net/customers/csc/management/updateinstallbase.jsp . Failure to do so can result in significant delays if you need replacement parts. This note does not apply if you replace existing components with the same type of component.**

Copyright © 2018, Juniper Networks, Inc.

Related Documentation

- Installing and Removing QFX3600 or QFX3600-I Device Hardware Components on page 657

Understanding Redundancy of QFX3600 and QFX3600-I Components and Functionality

The following hardware components provide redundancy on QFX3600 and QFX3600-I devices:

- Power supplies—QFX3600 and QFX3600-I devices have two power supplies. Each power supply provides power to all components in the device. The two power supplies provide full power redundancy to the device. If one power supply fails or is removed, the second power supply balances the electrical load without interruption.

  To provide power redundancy to the system both power supplies must be installed. Connect power source feed A to one power supply and power source feed B to the second power supply.

  CAUTION: **Do not connect feed A and feed B to the same power supply input terminal.**

- Cooling system—QFX3600 and QFX3600-I devices have three fan trays. If a fan module on a fan tray fails and is unable to keep the QFX3600 device within the desired temperature thresholds, chassis alarms occur and the device may shut down.

Related Documentation

- AC Power Supply for a QFX3500, QFX3600, or QFX3600-I Device on page 110
- DC Power Supply for a QFX3500, QFX3600, or QFX3600-I Device on page 112
- Cooling System and Airflow for QFX3600 and QFX3600-I Devices on page 107

Chassis Physical Specifications for QFX3600 and QFX3600-I Devices

The QFX3600 and QFX3600-I chassis is a rigid sheet-metal structure that houses the hardware components. Table 17 on page 103 summarizes the physical specifications of the QFX3600 and QFX3600-I chassis.

Table 17: Chassis Physical Specifications for QFX3600 and QFX3600-I Devices

Description	Value
Chassis height	1.74 in. (4.4 cm)
Chassis width	• Including mounting brackets: 19.2 in. (48.8 cm) • Excluding mounting brackets: 16.9 in. (42.9 cm)
Chassis depth	• Including FRU handles and locking levers: 19.4 in. (49.3 cm) • Excluding FRU handles and locking levers: 19.3 in. (49 cm)

Table 17: Chassis Physical Specifications for QFX3600 and QFX3600-I Devices (continued)

Description	Value
Weight	• With FRUs installed: 20.5 lb (9.3 kg) • Without FRUs installed: 14.6 lb (6.6 kg) • AC power supply: 2.2 lb (1 kg) • DC power supply: 2.2 lb (1 kg) • Fan tray: 0.9 lb (0.4 kg)

Related Documentation

- Rack Requirements for a QFX3600 or QFX3600-I Device on page 233
- Cabinet Requirements for a QFX3600 or QFX3600-I Device on page 241
- Installing and Connecting a QFX3600 or QFX3600-I Device on page 453
- Installing and Removing QFX3600 or QFX3600-I Device Hardware Components on page 657

Front Panel of a QFX3600 Device

The front panel of the QFX3600 device consists of the following components:

- LCD panel—The LCD panel displays the device hostname and the number of active alarms.

  TIP: Alternatively, you can use the **show chassis lcd** CLI command to view what is currently displayed on the LCD panel.

- Chassis status LEDs
- USB port
- Console (**CON**) port
- Management ports—The QFX3600 device has four management ports. The ports labeled **C0** and **C1** are 1000BASE-T RJ-45 ports, and the ports labeled **C0S** and **C1S** are 1-Gbps SFP ports.
  - If you are using the QFX3600 device as a Node device in a QFabric system, these ports are used to connect the QFX3600 device to the QFabric system control plane and management network. See "Determining Transceiver Support for QFabric Systems" on page 258 for information about the supported transceivers and required cables.
  - If you are using the QFX3600 device as a standalone switch, these ports are used to connect the QFX3600 device to a management network. See "Cable Specifications for Console and Management Connections for the QFX Series" on page 268 for information about the required cables.

Copyright © 2018, Juniper Networks, Inc.

NOTE: When an SFP transceiver is inserted into a management port, the corresponding RJ-45 management port (C0 or C1) is disabled. Either RJ-45 or SFP management ports can be used, but not both.

- Chassis serial number label and ESD point

NOTE: The chassis serial number ID label is located on a sliding panel on the top right of the front panel on a QFX3600 device (see Figure 66 on page 106). To use the sliding panel as an ESD point, pull the sliding panel partway out of the chassis, and connect a tape-style ESD grounding strap to the panel.

- Access and uplink ports—The QFX3600 device has sixteen 40-Gbps ports labeled **Q0** through **Q15** that support quad small form-factor pluggable plus (QSFP+) transceivers.
  - If you are using the QFX3600 device as a Node device in a QFabric system, by default, four ports (labeled **Q0** through **Q3**) are configured for uplink connections between your QFX3600 Node device and your Interconnect device, and twelve ports (labeled **Q4** through **Q15**) use QSFP+ direct-attach copper (DAC) breakout cables or QSFP+ transceivers with fiber breakout cables to support 48 10-Gigabit Ethernet interfaces for connections to either endpoint systems (such as servers and storage devices) or external networks. Optionally, you can choose to configure the first eight ports (labeled **Q0** through **Q7**) for uplink connections between your QFX3600 Node device and your Interconnect device and ports **Q2** through **Q15** for 10-Gigabit Ethernet connections to either endpoint systems or external networks. See "Determining Transceiver Support for QFabric Systems" on page 258.
  - If you are using the QFX3600 device as a standalone switch, by default, all 16 QSFP+ ports (**Q0** through **Q15**) are configured as 40-Gigabit Ethernet (*xle*) ports. Optionally, you can choose to configure each port to operate as 10-Gigabit Ethernet (*xe*) ports. The number of ports supported is release dependent. See *Configuring the Port Type on QFX3600 Standalone Switches* for your release for more information about configuring the port type. You can use QSFP+ direct-attach copper (DAC) cables, QSFP+ DAC breakout cables, or QSFP+ transceivers. You can use QSFP+ transceivers to create four 10-Gigabit Ethernet ports by using a fiber breakout cable to distribute the interfaces to four 10GBASE-SR SFP+ transceivers. (Juniper Networks does not sell fiber breakout cables, they must be purchased separately.) See *Determining Interface Support for the QFX3600 Device*.
- Access port and uplink port LEDs

Figure 66 on page 106 shows the front of a QFX3600 device.

Figure 66: QFX3600 Device Front Panel

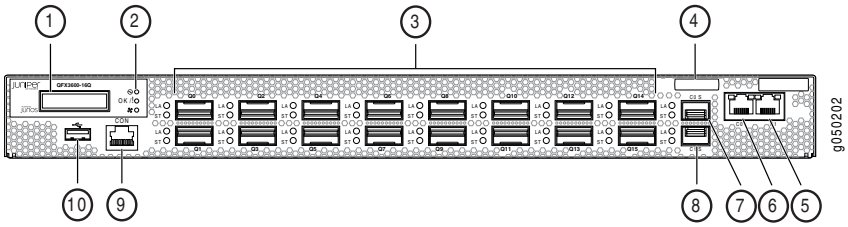

1—LCD panel	6—**C0** management port
2—Chassis status LEDs	7—**C0S** management port
3—Access and uplink ports	8—**C1S** management port
4—Chassis serial number label and ESD point	9—Console (**CON**) port
5—**C1** management port	10—USB port

Related Documentation

- Field-Replaceable Units for QFX3600 and QFX3600-I Devices on page 102
- Rear Panel of QFX3600 and QFX3600-I Devices on page 106
- USB Port Specifications for the QFX Series on page 257
- Chassis Status LEDs in the QFX3600 and QFX3600-I Device on page 749
- Access Port and Uplink Port LEDs on a QFX3600 or QFX3600-I Device on page 751
- Prevention of Electrostatic Discharge Damage on page 360
- Installing and Removing QFX3600 or QFX3600-I Device Hardware Components on page 657

Rear Panel of QFX3600 and QFX3600-I Devices

The rear panel of QFX3600 and QFX3600-I devices consists of the following components:

- Fan trays
- Grounding point
- Power supplies

Figure 67 on page 106 shows the rear panel of a QFX3600 device.

Figure 67: QFX3600 and QFX3600-I Device Rear Panel

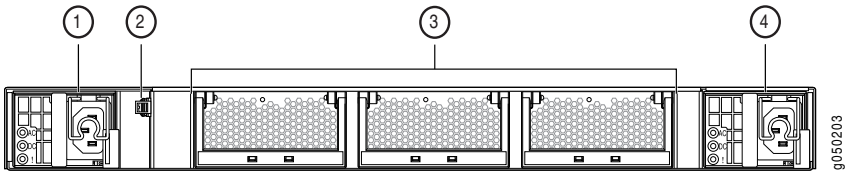

1—Power supply **0**	3—Fan trays **0-2**
2—Grounding point	4—Power supply **1**

Copyright © 2018, Juniper Networks, Inc.

Related Documentation

- Field-Replaceable Units for QFX3600 and QFX3600-I Devices on page 102
- Front Panel of a QFX3600 Device on page 104
- Cooling System and Airflow for QFX3600 and QFX3600-I Devices on page 107
- *Grounding Cable and Lug Specifications for QFX3600 and QFX3600-I Devices*
- AC Power Supply for a QFX3500, QFX3600, or QFX3600-I Device on page 110
- DC Power Supply for a QFX3500, QFX3600, or QFX3600-I Device on page 112
- Prevention of Electrostatic Discharge Damage on page 360
- Installing and Removing QFX3600 or QFX3600-I Device Hardware Components on page 657

Cooling System and Airflow for QFX3600 and QFX3600-I Devices

The cooling system in QFX3600 and QFX3600-I devices consist of three field-replaceable unit (FRU) fan trays with two fan modules each (see Figure 68 on page 107). In addition, the power supplies have internal fans to cool themselves.

Figure 68: Fan Tray for QFX3600 and QFX3600-I Devices

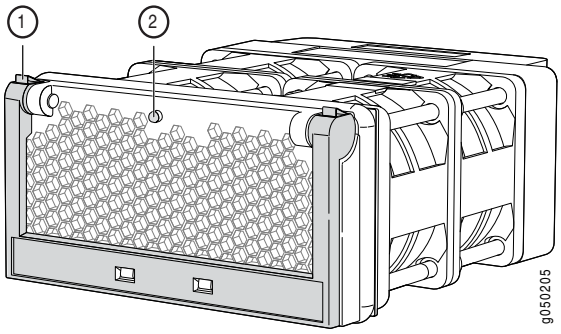

The fan tray provides FRU-to-port or port-to-FRU airflow depending on the SKU you purchase. Table 18 on page 108 lists the different QFX3600 and QFX3600-I SKUs and their direction of airflow.

NOTE: In QFX Series device model names, *AFI*, or *airflow in*, describes FRU--to-port airflow. *AFO*, or *airflow out*, describes port-to-FRU airflow.

NOTE: The rear panel of the device where the power supplies and fan trays are located is the FRU side of the device.

Table 18: Airflow Direction in QFX3600 and QFX3600-I Device Models

Model	Direction of Airflow
QFX3600-16Q-AFI	FRU-to-port
QFX3600-16Q-AFO	Port-to-FRU
QFX3600-I-16Q-AFI	FRU-to-port
QFX3600-I-16Q-AFO	Port-to-FRU

In QFX3600 and QFX3600-I device models that have FRU--to-port airflow, the air intake to cool the chassis is located on the rear panel of the chassis, where the FRUs are installed. Air is pulled into the chassis and pushed away from the fan trays. Hot air exhausts from the rear of the chassis, where the ports are located. See Figure 69 on page 108.

Figure 69: FRU-Side-to-Port-Side Airflow Through the QFX3600 and QFX3600-I Chassis

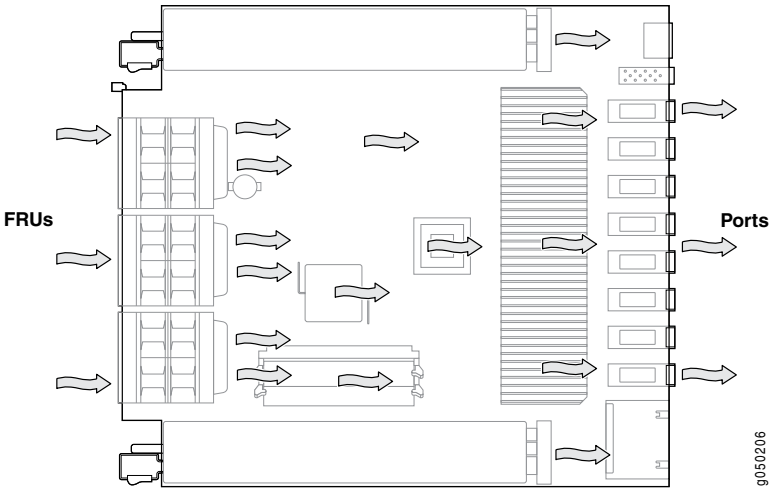

In QFX3600 and QFX3600-I device models that have port-to-FRU airflow, the air intake to cool the chassis is located on the front panel of the chassis, the side with access and uplink ports. Air is pulled into the chassis and pulled through the fan trays. Hot air exhausts from the front of the chassis, where the FRUs are installed. See Figure 70 on page 109.

Copyright © 2018, Juniper Networks, Inc.

Figure 70: Port-to-FRU Airflow Through the QFX3600 and QFX3600-I Chassis

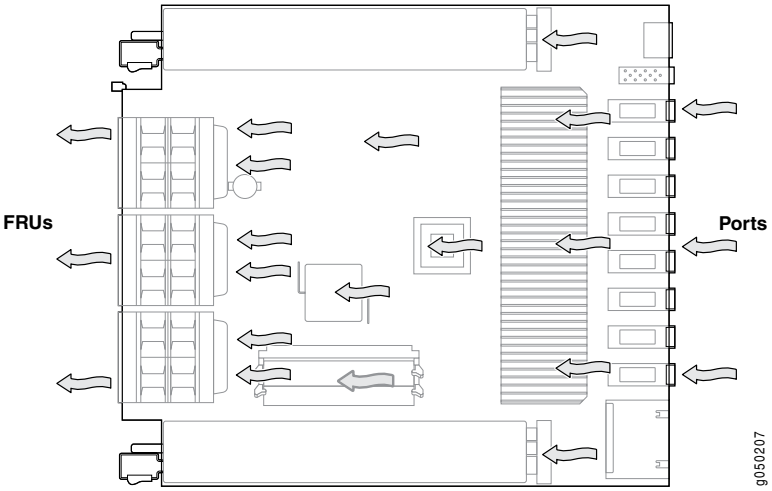

Each airflow type requires specific power supplies and fan trays that have fan modules oriented in the proper direction. The fan trays are designed so that they can only be inserted into the device model that supports the same airflow type. The power supplies have labels and arrows on the handles that depict the direction of airflow (see Figure 71 on page 109). The label **AFI** denotes FRU-to-port airflow. **AFO** denotes port-to-FRU airflow.

CAUTION: Verify that the direction of the arrow on the power supply handle matches the direction of airflow in the chassis. See Table 18 on page 108 to determine your model's airflow direction.

Figure 71: Label Identifying Airflow Direction on Power Supply Handle

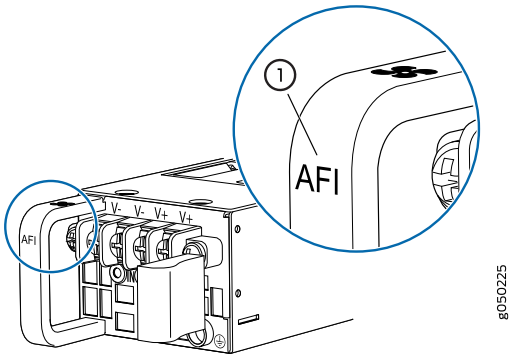

Table 19 on page 110 lists QFX3600 and QFX3600-I device FRUs and their direction of airflow.

Copyright © 2018, Juniper Networks, Inc.

Table 19: Airflow Direction in QFX3600 and QFX3600-I SKUs

FRU	Part Number	Direction of Airflow
Fan tray	QFXC01-FANBI	FRU-side-to-port-side
	QFXC01-FANBO	Port-side-to-FRU-side
AC power supply	• JPSU-650W-AC-AFI • QFXC01-PWRACI-650A	FRU-side-to-port-side
	JPSU-650W-AC-AFO	Port-side-to-FRU-side
DC power supply	JPSU-650W-DC-AFI	FRU-side-to-port-side
	JPSU-650W-DC-AFO	Port-side-to-FRU-side

The chassis includes a fan speed-control system. Under normal operating conditions, fans operate at reduced speed to reduce noise and power consumption.

Temperature sensors in the chassis monitor the temperature within the chassis. The system raises an alarm if a fan fails or if the temperature inside the chassis rises above permitted levels. If the temperature inside the chassis rises above the threshold, the device shuts down automatically. You can see the status of fans and the temperature remotely through the CLI by issuing the operational mode command **show chassis environment**.

You cannot replace a single fan module. If one or more fan modules fail, you must replace the entire fan tray.

Related Documentation

- Field-Replaceable Units for QFX3600 and QFX3600-I Devices on page 102
- Rear Panel of QFX3600 and QFX3600-I Devices on page 106
- Prevention of Electrostatic Discharge Damage on page 360
- Installing a Fan Tray in a QFX3600 or QFX3600-I Device on page 663
- Removing a Fan Tray from a QFX3600 or QFX3600-I Device on page 662
- Fan Tray LED on a QFX3600 or QFX3600-I Device on page 753

AC Power Supply for a QFX3500, QFX3600, or QFX3600-I Device

The power supplies in QFX3500, QFX3600, and QFX3600-I devices (see Figure 72 on page 111) are hot-removable and hot-insertable field-replaceable units (FRUs) that you can install on the front panel without powering off the device or disrupting the switching function.

The AC power supply in QFX3500, QFX3600, and QFX3600-I devices is 650 W.

Copyright © 2018, Juniper Networks, Inc.

Figure 72: AC Power Supply in QFX3500, QFX3600, or QFX3600-I Devices

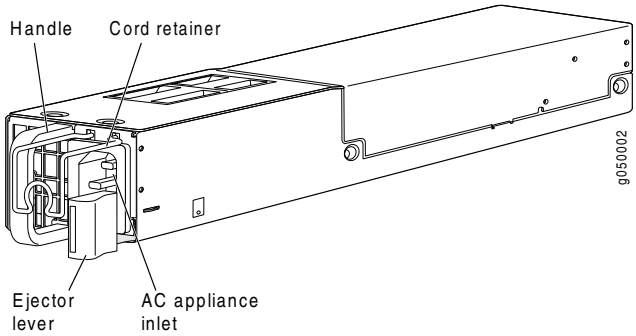

The power supply provides FRU-to-port or port-to-FRU airflow depending on the product SKU you purchase. On legacy switches, or switches with an LCD, this airflow is called back-to-front and front-to-back. The power supplies either have labels on the handles that indicate the direction of the airflow or they have color-coded handles with a fan icon. See Figure 74 on page 111 for an example of the power supply with the fan icon. A power supply with a blue handle denotes FRU-to-port airflow; a power supply with a gold-colored handle denotes port-to-FRU airflow.

Figure 73: An Arrow Icon and AFI Label Identifying Airflow Direction on Power Supply Handle

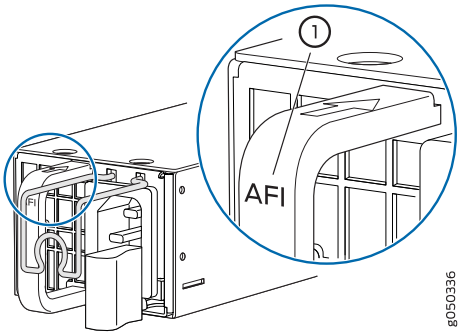

Figure 74: A Fan Icon Identifying Airflow Direction on Power Supply Handle

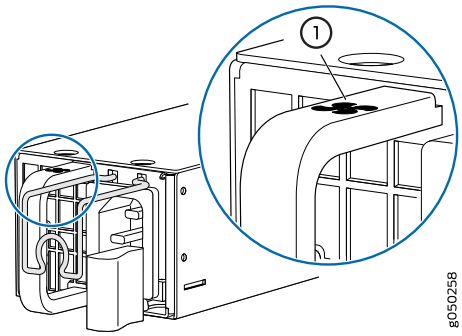

CAUTION: Verify that the direction of the airflow on the power supply handle matches the direction of airflow in the chassis. Ensure that each power supply you install in the chassis has the same airflow direction. If you install power

supplies with two different airflow directions, Junos OS raises an alarm, and the status (OK/!) LED blinks amber.

Table 20 on page 112 shows the different power supplies and their direction of airflow.

Table 20: Airfow Direction in QFX3500, QFX3600, or QFX3600-I AC Power Supplies

Model	Direction of Airflow
• JPSU-650W-AC-AFI • QFXC01-PWRACI-650A	FRU-to-port
JPSU-650W-AC-AFO	Port-to-FRU

To avoid electrical injury, carefully follow instructions in "Connecting AC Power to a QFX3500, QFX3600, or QFX3600-I Device" on page 463.

Related Documentation

- AC Power Cord Specifications for a QFX Series Device on page 292
- AC Power Supply LEDs on a QFX3500, QFX3600, or QFX3600-I Device on page 753
- Front Panel of a QFX3500 Device on page 122
- Field-Replaceable Units in a QFX3500 Device on page 119
- AC Power Specifications for a QFX3500 Device on page 299
- Prevention of Electrostatic Discharge Damage on page 360

DC Power Supply for a QFX3500, QFX3600, or QFX3600-I Device

The power supplies in a QFX3500, QFX3600, and QFX3600-I device (see Figure 75 on page 113 and Figure 76 on page 113) are hot-removable and hot-insertable field-replaceable units (FRUs) that you can install in the device without powering off the device or disrupting the switching function.

The DC power supply in QFX3500, QFX3600, and QFX3600-I devices is 650 W.

NOTE: The V+ terminals are referred to as +RTN and V– terminals are referred to as –48 V in "DC Power Wiring Sequence Warning" on page 367 and "DC Power Electrical Safety Guidelines" on page 364.

Copyright © 2018, Juniper Networks, Inc.

Figure 75: DC Power Supply for a QFX3500, QFX3600, or QFX3600-I Device

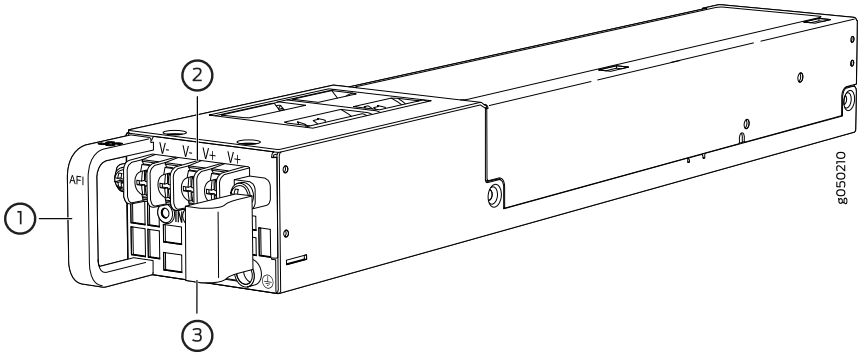

1—Handle	3—Ejector lever
2—Terminal block	

Figure 76: DC Power Supply Faceplate

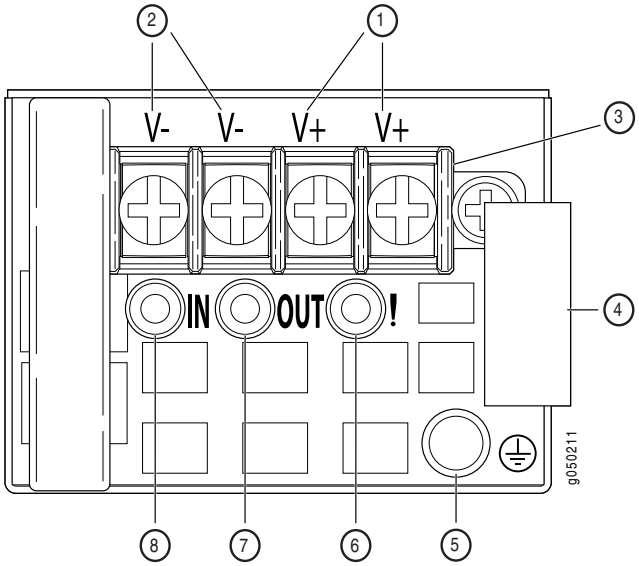

1—Shunt positive input terminals	5—ESD grounding point
2—Shunt negative input terminals	6—Fault LED
3—Terminal block	7—Output LED
4—Ejector lever	8—Input LED

CAUTION: The V+ terminals are shunted internally together, as are the V- terminals. The same polarity terminal can be wired together from the same source to provide an additional current path in a higher power chassis. Do not connect the terminals to different sources.

To supply sufficient power, terminate the DC input wiring on a facility DC source that is capable of supplying a minimum of 7 A at –48 VDC for QFX3500 and 8 A a5 –48 VDC for QFX3600..

The power supply provides FRU-to-port or port-to-FRU airflow depending on the SKU you purchase. The power supplies have labels and arrows on the handles that depict the direction of airflow (see Figure 77 on page 114). The label **AFI** denotes FRU-to-port airflow. **AFO** denotes port-to FRU airflow.

Figure 77: Label Identifying Airflow Direction on Power Supply Handle

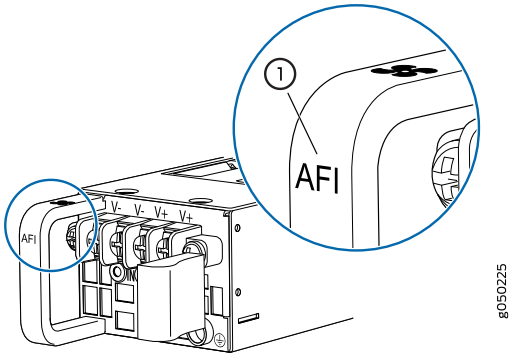

1— Airflow in indicator	

CAUTION: Verify that the airflow direction of the power supply handle matches the direction of airflow in the chassis. Ensure that each power supply you install in the chassis has the same airflow direction. If you install power supplies with two different airflow directions, Junos OS raises an alarm, and the status (OK/!) LED blinks amber.

Table 21 on page 114 shows the different power supplies and their direction of airflow.

Table 21: Airflow Direction in QFX3500, QFX3600, and QFX3600-I Device DC Power Supplies

Model	Direction of Airflow
JPSU-650W-DC-AFI	FRU-to-port
JPSU-650W-DC-AFO	Port-to-FRU

To avoid electrical injury, carefully follow instructions in "Connecting DC Power to a QFX3500, QFX3600, or QFX3600-I Device" on page 466.

Related Documentation

- DC Power Supply LEDs on a QFX3500, QFX3600, or QFX3600-I Device on page 754
- DC Power Specifications for a QFX3500 Device on page 301
- DC Power Specifications for a QFX3600 or QFX3600-I Device on page 297

Copyright © 2018, Juniper Networks, Inc.

CHAPTER 6

QFX3500 Overview

- QFX3500 Device Overview on page 115
- Field-Replaceable Units in a QFX3500 Device on page 119
- Understanding Redundancy of QFX3500 Device Components and Functionality on page 120
- Chassis Physical Specifications for a QFX3500 Chassis on page 121
- Front Panel of a QFX3500 Device on page 122
- Rear Panel of a QFX3500 Device on page 123
- Cooling System and Airflow for a QFX3500 Device on page 124
- Management Board for a QFX3500 Device on page 128
- AC Power Supply for a QFX3500, QFX3600, or QFX3600-I Device on page 130
- DC Power Supply for a QFX3500, QFX3600, or QFX3600-I Device on page 132
- Grounding Cable and Lug Specifications for a QFX3500 Device on page 134

QFX3500 Device Overview

The Juniper Networks QFX3500 device is a high-speed, multipurpose switch especially designed for next-generation data centers. The QFX3500 can be configured as a standalone switch, a Node device in a QFabric system, or as a member of a QFX Virtual Chassis.

Forty-eight 10-Gbps access ports in the device use small form-factor pluggable plus (SFP+) transceivers and operate by default as 10-Gigabit Ethernet interfaces. Optionally, you can choose to configure up to 12 of the ports as 2-Gbps, 4-Gbps, or 8-Gbps Fibre Channel (FC) interfaces, and up to 36 of the ports as 1-Gigabit Ethernet interfaces. When used as a standalone switch, four 40-Gbps uplink ports in the device use quad small form-factor pluggable plus (QSFP+) to four SFP+ copper breakout cables to support an additional 15 10-Gigabit Ethernet interfaces.

QFX3500 devices can function as a Fibre Channel over Ethernet (FCoE)-FC gateway or as an FCoE transit switch. FCoE is a method of supporting converged FC and Ethernet traffic on a data center bridging (DCB) network by encapsulating unmodified FC frames in Ethernet to transport the FC frames over the physical Ethernet network.

Copyright © 2018, Juniper Networks, Inc.

In a QFabric system, a QFX3500 device functions as a Node device, connected to a QFabric system through 40-Gbps uplink ports to a Juniper Networks QFX3008-I or QFX3600-I Interconnect device. Together, the QFX3500 Node devices and QFX3008-I or QFX3600-I Interconnect devices form a multistage, nonblocking switch fabric that provides a high-performance, low-latency, unified interconnect solution for next-generation data centers.

The QFX3500 Node devices and Interconnect devices are connected to Juniper Networks QFX3100 Director devices in an out-of-band management network through Juniper Networks EX4200 Ethernet Switches. The QFX3100 Director devices present the QFabric system devices as a single network entity, which enables simplified management of your data center using the Junos OS command-line interface (CLI).

In a QFX Virtual Chassis, the QFX3500 device can participate with other QFX3500 devices and QFX3600 devices in a ring topology with up to 10 members.

In a QFX5100 Virtual Chassis Fabric, the QFX3500 device can participate as a leaf device. Up to a total of 20 devices can participate in the QFX5100 Virtual Chassis Fabric.

- Software on page 116
- Hardware on page 116

Software

QFX Series devices use the Junos operating system (OS), which provides Layer 2 and Layer 3 switching, routing, and security services. Junos OS is installed on the QFX3500 device's 8-gigabyte (GB) internal flash drive. The same Junos OS code base that runs on QFX3500 devices also runs on all Juniper Networks EX Series switches, and J Series, M Series, MX Series, and T Series routers.

For more information about which features are supported on QFX Series devices, see Feature Explorer.

When the QFX3500 device is operating as a standalone switch, you manage the switch using the Junos OS command-line interface (CLI), accessible through the console and out-of-band management ports on the device.

When a QFX Series device operates as part of a QFabric system, all the devices in the data center fabric are managed through the Administrator software installed on the QFX3100 Director devices. Each device in a QFabric system is interconnected in a single control plane and management network, using the redundant management ports on each device.

Hardware

The compact QFX3500 device is 1 rack unit (1 U) in size and designed to fit in industry-standard 19-inch rack-mount enclosures. See Figure 78 on page 117 and Figure 79 on page 117 and "Chassis Physical Specifications for a QFX3500 Chassis" on page 121.

Copyright © 2018, Juniper Networks, Inc.

NOTE: The standard mounting configuration for the QFX3500 device uses a two rail mounting system. The QFX3500-RB-ACRB device model uses a four rail mounting system for installations that need to recess the switch or need to mount the port (rear) end of the switch forward.

Figure 78: QFX3500 Device Front

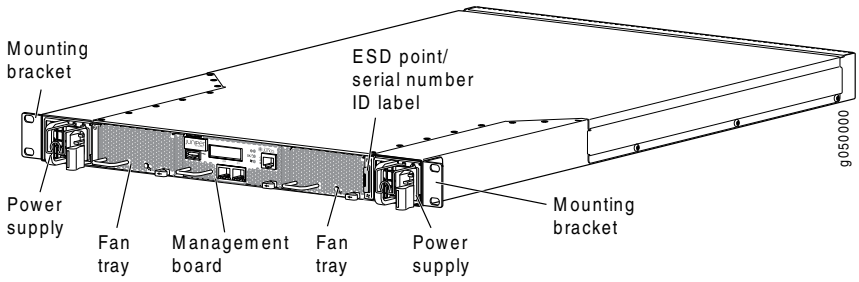

Figure 79: QFX3500 Device Rear

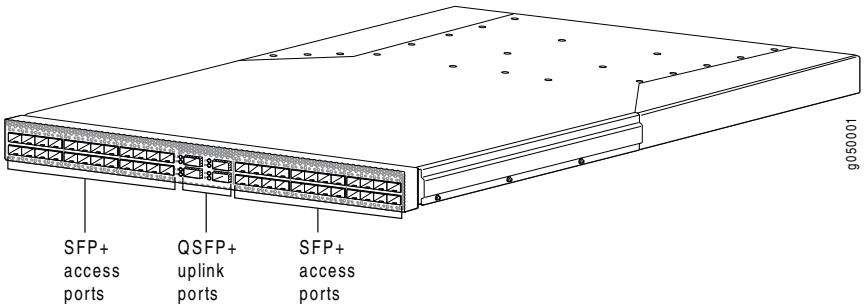

The front panel of the QFX3500 chassis has an LCD panel that displays the device hostname and the number of active alarms. See "Front Panel of a QFX3500 Device" on page 122. The rear panel has 48 10-Gbps access ports and 4 40-Gbps uplink ports. See "Rear Panel of a QFX3500 Device" on page 123.

SFP+ Access Ports

The QFX3500 device has 48 access ports (**0** through **47**) that support small form-factor pluggable plus (SFP+) and small form-factor pluggable (SFP) transceivers, as well as SFP+ direct attach copper cables, also known as Twinax cables. See *Determining Interface Support for the QFX3500 Device*.

- Up to 48 of the access ports can be used for SFP+ transceivers or SFP+ direct attach copper cables. You can use 10-Gigabit Ethernet SFP+ transceivers and SFP+ direct attach copper cables in any access port. You can use 2-Gbps, 4-Gbps, or 8-Gbps Fibre Channel SFP+ transceivers in ports **0** through **5** and ports **42** through **47**.

Copyright © 2018, Juniper Networks, Inc.

NOTE: If you use Fibre Channel SFP+ transceivers in ports **0** through **5** or ports **42** through **47**, you must configure the entire block of ports as Fibre Channel ports. For example, if you use a Fibre Channel SFP+ transceiver in any of the ports **0** through **5**, then ports **0** through **5** must be configured as Fibre Channel ports. If you use a Fibre Channel SFP+ transceiver in any of the ports **42** through **47**, then ports **42** through **47** must be configured as Fibre Channel ports. You then cannot use 10-Gigabit Ethernet SFP+ transceivers in these ports.

- Up to 36 of the access ports can be used for SFP transceivers. Gigabit Ethernet SFP transceivers can be used in ports **6** through **41**.

CAUTION: Do not place a copper transceiver in an access port directly above or below another copper transceiver. Internal damage to the access ports and device can occur. Because of this limitation, a maximum of 18 copper transceivers can be installed in ports 6 through 41. We recommend using only the top row of access ports for copper transceivers.

Figure 80 on page 118 shows the location of the SFP+ access ports, including the ports that can be used with Fibre Channel SFP+ transceivers and Gigabit Ethernet SFP transceivers.

Figure 80: SFP+ Access Port Locations

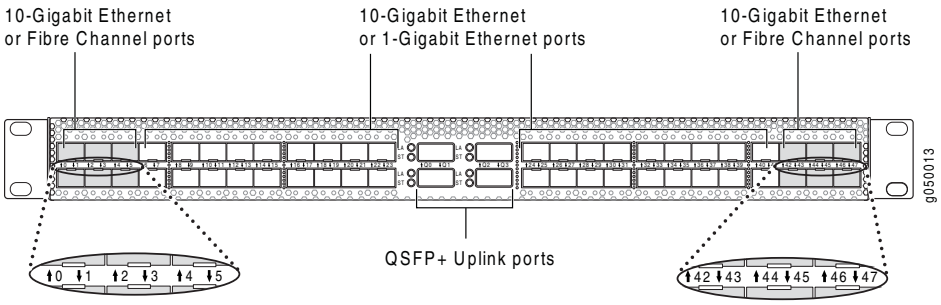

QSFP+ Uplink Ports

The QFX3500 device has four uplink ports (**Q0** through **Q3**) that support up to four QSFP+ transceivers, as well as QSFP+ DAC or DAC breakout cables. See *Determining Interface Support for the QFX3500 Device*.

When the QFX3500 device is used as part of a QFabric system, these uplink ports are used to connect the QFX3500 Node device to QFX3008-I or QFX3600-I Interconnect devices. See "Connecting a QFX3500 Node Device to a QFX3008-I Interconnect Device" on page 548 or *Connecting a QFX3500 Node Device to a QFX3600-I Interconnect Device*.

Copyright © 2018, Juniper Networks, Inc.

When the QFX3500 device is used as a standalone switch, these uplink ports are configured by default as 15 10-Gigabit Ethernet interfaces. Another option for these ports is to configure one or more of the ports as 40-Gigabit Ethernet interfaces.

NOTE: Port Q0 is unique in that the number of 10-Gigabit Ethernet interfaces supported varies by Junos OS release. In some Junos OS releases, port 00 has a reserved port and in other releases the port is available. See the topics on Channelizing Interfaces or Configuring the Port Type, for your specific release.

Figure 81 on page 119 shows the location of the QSFP+ uplink ports and the default 10-Gigabit Ethernet interface numbering.

NOTE: The QSFP+ uplink ports are not supported in Junos OS Release 11.1. The QSFP+ uplink ports are supported in Junos OS Release 11.2 and later. To configure the ports as 40-Gigabit Ethernet interfaces, you must be using Junos OS Release 12.2X50-D20 or later.

Figure 81: QSFP+ Uplink Port Locations

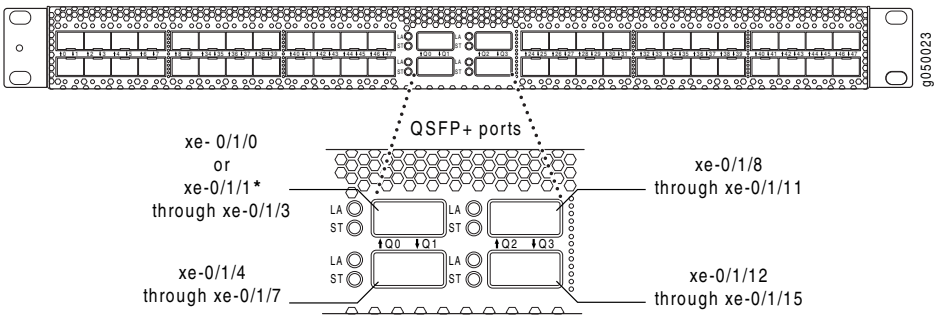

*Port availability is release dependent.
See the topic on Channelizing Interfaces for your Junos Release.

Related Documentation

- Field-Replaceable Units in a QFX3500 Device on page 119
- Site Preparation Checklist for a QFX3500 Device on page 213
- Access Port and Uplink Port LEDs on a QFX3500 Device on page 759
- Installing and Removing QFX3500 Device Hardware Components on page 645

Field-Replaceable Units in a QFX3500 Device

Field-replaceable units (FRUs) are components that you can replace at your site. The QFX3500 device FRUs except the management board are hot-insertable and hot-removable: you can remove and replace them without powering off the device or disrupting the switching function.

CAUTION: Replace a failed power supply with a blank panel or new power supply within 1 minute of removal to prevent chassis overheating. Replace a failed fan tray with a new fan tray within 1 minute of removal to prevent chassis overheating.

Table 22 on page 120 lists the FRUs for the QFX3500 device and actions to take before removing them.

Table 22: FRUs in a QFX3500 Device

FRU	Required Action
Power supplies	None.
Fan trays	None.
Management board	You must power off the QFX3500 device before replacing the management board. See "Removing a Management Board from a QFX3500 Device" on page 654.
Optical transceivers	None. We recommend that you disable the interface using the **set interfaces *interface-name* disable** command before you remove the transceiver. See "Disconnecting a Fiber-Optic Cable from a QFX Series Device" on page 711.

NOTE: If you have a Juniper J-Care service contract, register any addition, change, or upgrade of hardware components at https://www.juniper.net/customers/csc/management/updateinstallbase.jsp . Failure to do so can result in significant delays if you need replacement parts. This note does not apply if you replace existing components with the same type of component.

Related Documentation

- Installing and Removing QFX3500 Device Hardware Components on page 645

Understanding Redundancy of QFX3500 Device Components and Functionality

The following hardware components provide redundancy on a QFX3500 device:

- Power supplies—The QFX3500 device has one or two power supplies. Each power supply provides power to all components in the device. If two power supplies are installed, the two power supplies provide full power redundancy to the device. If one power supply fails or is removed, the second power supply balances the electrical load without interruption.

  To provide power redundancy to the system both power supplies must be installed. Connect power source feed A to one power supply and power source feed B to the second power supply.

Copyright © 2018, Juniper Networks, Inc.

CAUTION: **Do not connect feed A and feed B to the same power supply input terminal.**

- Cooling system—The QFX3500 device has two fan trays. Additional cooling is provided by two fan modules on the management board. If a fan module on a fan tray or management board fails and is unable to keep the QFX3500 device within the desired temperature thresholds, chassis alarms occur and the QFX3500 device may shut down.

Related Documentation

- AC Power Supply for a QFX3500, QFX3600, or QFX3600-I Device on page 110
- DC Power Supply for a QFX3500, QFX3600, or QFX3600-I Device on page 112
- Cooling System and Airflow for a QFX3500 Device on page 124

Chassis Physical Specifications for a QFX3500 Chassis

The QFX3500 device chassis is a rigid sheet-metal structure that houses the hardware components. Table 23 on page 121 summarizes the physical specifications of the QFX3500 chassis.

Table 23: Physical Specifications for the QFX3500 Device Chassis

Description	Value
Chassis height	1.74 in. (4.4 cm)
Chassis width	• Including mounting brackets: 19 in. (48.3 cm) • Excluding mounting brackets: 17.4 in. (44.2 cm)
Chassis depth	• Including FRU handles and locking levers: 29.2 in. (74.2 cm) • Excluding FRU handles and locking levers: 28 in. (71.1 cm)
Weight	• With FRUs installed: 30.8 lb (14 kg) • Without FRUs installed: 23.8 lb (11 kg) • AC power supply: 2.2 lb (1 kg) • Fan tray: 0.9 lb (0.4 kg) • Management board: 1.3 lb (0.6 kg)

Related Documentation

- Rack Requirements for a QFX3500 Device on page 235
- Cabinet Requirements for a QFX3500 Device on page 242
- Mounting a QFX3500 Device in a Rack or Cabinet on page 475
- Installing and Connecting a QFX3500 Device on page 473
- Installing and Removing QFX3500 Device Hardware Components on page 645

Copyright © 2018, Juniper Networks, Inc.

Front Panel of a QFX3500 Device

The front panel of the QFX3500 device consists of the following components:

- Management board
- Chassis serial number label and ESD point

> NOTE: The chassis serial number ID label is located on a sliding panel to the right of the fan tray on a QFX3500 device (see Figure 83 on page 122). To use the sliding panel as an ESD point, pull the sliding panel partway out of the chassis, and connect a clip-style or tape-style ESD grounding strap to the panel.

- Fan trays
- Power supplies

Figure 82 on page 122 and Figure 83 on page 122 show the front of a QFX3500 device.

Figure 82: QFX3500 Device Front Panel

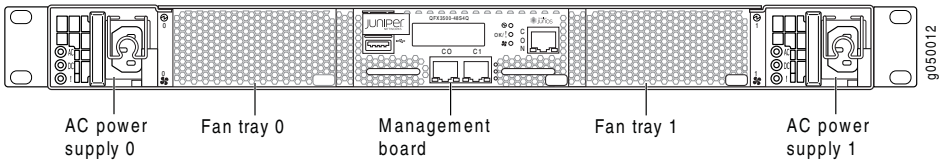

Figure 83: QFX3500 Device Front

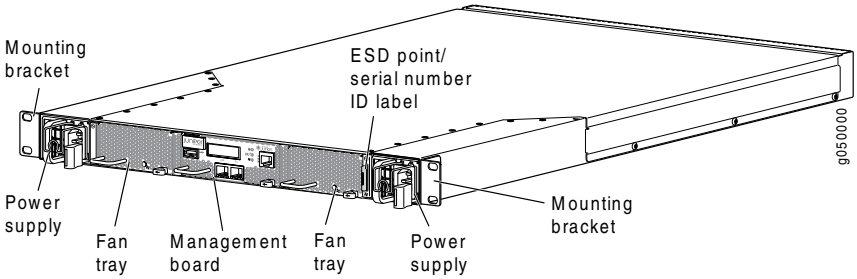

Related Documentation

- Field-Replaceable Units in a QFX3500 Device on page 119
- Rear Panel of a QFX3500 Device on page 123
- USB Port Specifications for the QFX Series on page 257
- Management Board for a QFX3500 Device on page 128
- Chassis Status LEDs on a QFX3500 Device on page 757
- Cooling System and Airflow for a QFX3500 Device on page 124
- AC Power Supply for a QFX3500, QFX3600, or QFX3600-I Device on page 110

Copyright © 2018, Juniper Networks, Inc.

- Prevention of Electrostatic Discharge Damage on page 360
- Installing and Removing QFX3500 Device Hardware Components on page 645

Rear Panel of a QFX3500 Device

The rear panel of the QFX3500 device consists of the following components:

- Access ports—The QFX3500 device has 48 access ports (**0** through **47**) that support small form-factor pluggable plus (SFP+) and small form-factor pluggable (SFP) transceivers, as well as SFP+ direct attach copper cables, also known as Twinax cables. See *Determining Interface Support for the QFX3500 Device*.
  - Up to 48 of the access ports can be used for SFP+ transceivers or SFP+ direct attach copper cables. You can use 10-Gigabit Ethernet SFP+ transceivers and SFP+ direct attach copper cables in any access port. You can use 2-Gbps, 4-Gbps, or 8-Gbps Fibre Channel SFP+ transceivers in ports **0** through **5** and ports **42** through **47**.

    NOTE: **If you use Fibre Channel SFP+ transceivers in ports 0 through 5 or ports 42 through 47, you must configure the entire block of ports as Fibre Channel ports. For example, if you use a Fibre Channel SFP+ transceiver in any of the ports 0 through 5, then ports 0 through 5 must be configured as Fibre Channel ports. If you use a Fibre Channel SFP+ transceiver in any of the ports 42 through 47, then ports 42 through 47 must be configured as Fibre Channel ports. You then cannot use 10-Gigabit Ethernet SFP+ transceivers in these ports.**

  - Up to 36 of the access ports can be used for SFP transceivers. Gigabit Ethernet SFP transceivers can be used in ports **6** through **41**.

    CAUTION: **Do not place a copper transceiver in an access port directly above or below another copper transceiver. Internal damage to the access ports and device can occur. Because of this limitation, a maximum of 18 copper transceivers can be installed in ports 6 through 41. We recommend using only the top row of access ports for copper transceivers.**

- Uplink ports—The QFX3500 device has four uplink ports (**Q0** through **Q3**) that support up to four QSFP+ DAC breakout cables. See *Determining Interface Support for the QFX3500 Device*. When the QFX3500 device is used as a Node device in a QFabric system, these uplink ports are used to connect the QFX3500 Node devices to Interconnect devices.

  NOTE: **The QSFP+ uplink ports are not supported in Junos OS Release 11.1. The QSFP+ uplink ports are supported in Junos OS Release 11.2 and later.**

- Access port and uplink port LEDs

Copyright © 2018, Juniper Networks, Inc.

Figure 84 on page 124 shows the rear panel of a QFX3500 device.

Figure 84: QFX3500 Device Rear Panel

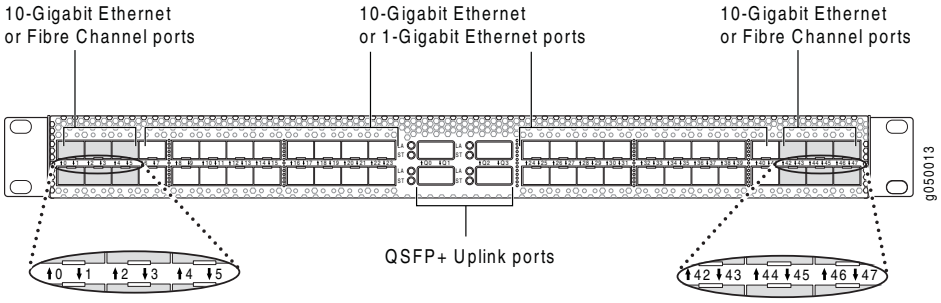

Related Documentation

- Field-Replaceable Units in a QFX3500 Device on page 119
- Front Panel of a QFX3500 Device on page 122
- Access Port and Uplink Port LEDs on a QFX3500 Device on page 759
- Installing and Removing QFX3500 Device Hardware Components on page 645

Cooling System and Airflow for a QFX3500 Device

The cooling system in a QFX3500 device consists of two field-replaceable unit (FRU) fan trays with two fan modules each (see Figure 85 on page 124) and two fan modules on the management board FRU (see Figure 86 on page 125). In addition, the power supplies have internal fans to cool themselves.

Figure 85: Fan Tray for a QFX3500 Device

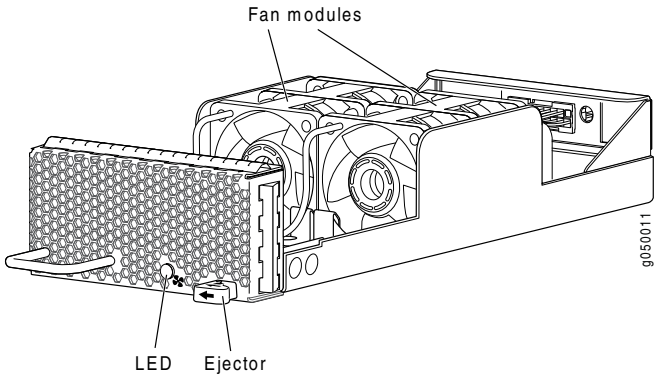

Copyright © 2018, Juniper Networks, Inc.

Figure 86: Management Board for a QFX3500 Device

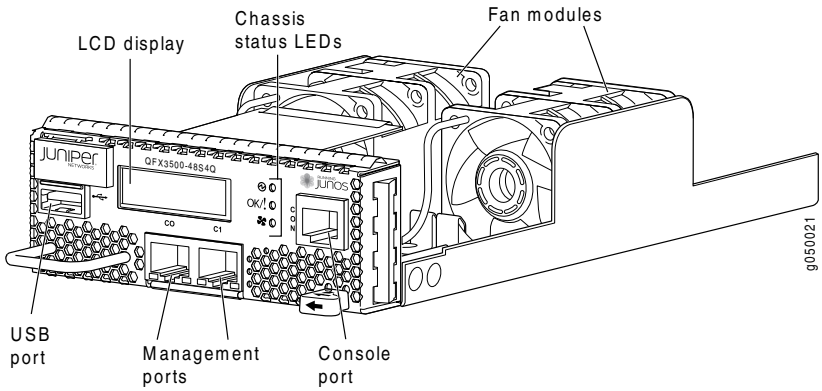

The QFX3500 device provides FRU-to-port or port-to-FRU airflow depending on the device model you purchase. Table 24 on page 125 lists the different QFX3500 device models and their direction of airflow.

NOTE: In QFX Series device model names, *AFI*, or *airflow in*, describes FRU-to-port airflow. *AFO*, or *airflow out*, describes port-to-FRU airflow.

NOTE: The front panel of the device where the power supplies, fan trays, and management boards are located is the FRU side of the device.

Table 24: Airflow Direction in QFX3500 Device Models

Model	Direction of Airflow
QFX3500-48S4Q-ACR	FRU-to-port
QFX3500-48S4Q-AFI	FRU-to-port
QFX3500-48S4Q-AFO	Port-to-FRU

In the QFX3500 device models that have FRU-to-port airflow, the air intake to cool the chassis is located on the front panel of the chassis, where the FRUs are installed. Air is pulled into the chassis and pushed away from the fan trays and management board. Hot air exhausts from the rear of the chassis, where the ports are located. See Figure 87 on page 126.

Figure 87: FRU-to-Port Airflow Through the QFX3500 Chassis

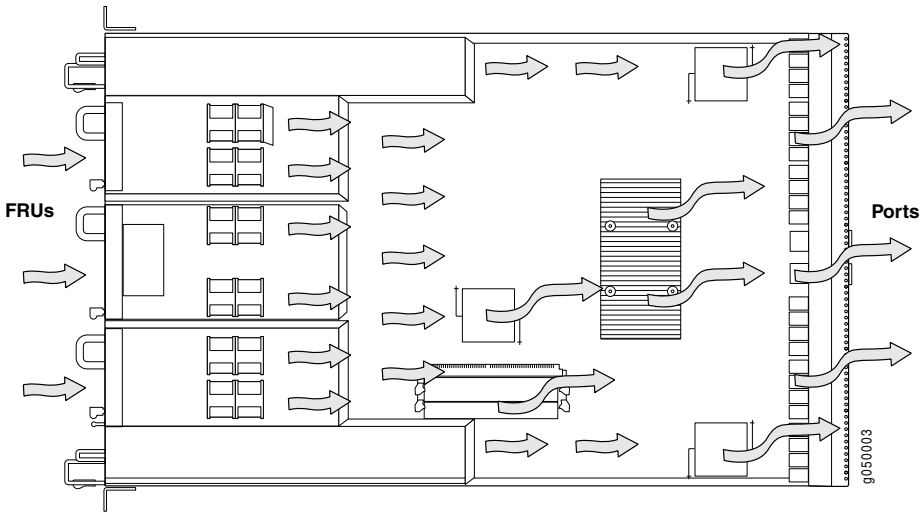

In the QFX3500 device models that have port-to-FRU airflow, the air intake to cool the chassis is located on the rear panel of the chassis, the side with access and uplink ports. Air is pulled into the chassis and pulled through the fan trays and management boards. Hot air exhausts from the front of the chassis, where the FRUs are installed. See Figure 88 on page 126.

Figure 88: Port-to-FRU Airflow Through the QFX3500 Chassis

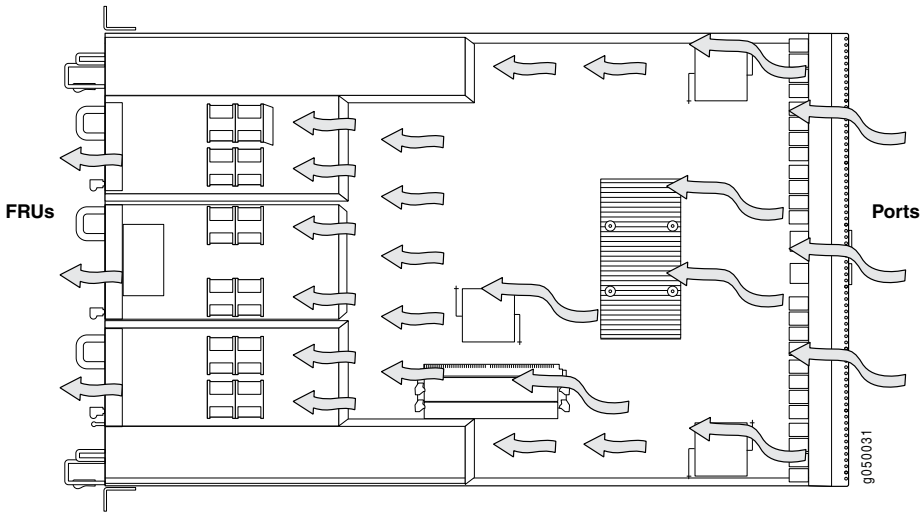

Each airflow type requires specific fan trays, management boards, and power supplies, that have fan modules oriented in the proper direction. The fan trays and management boards are designed so that they can only be inserted into the QFX3500 device model that supports the same airflow type. The power supplies have labels and arrows on the

Copyright © 2018, Juniper Networks, Inc.

handles that depict the direction of airflow (see Figure 89 on page 127). The label **AFI** denotes FRU-to-port airflow, **AFO** denotes port-to-FRU airflow.

CAUTION: Verify that the direction of the arrow on the power supply handle matches the direction of airflow in the chassis. See Table 24 on page 125 to determine your model's airflow direction.

Figure 89: Label Identifying Airflow Direction on Power Supply Handle

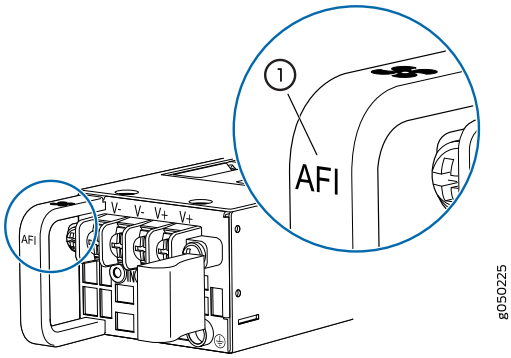

Table 25 on page 127 lists the QFX3500 device FRUs and their direction of airflow.

Table 25: Airflow Direction in QFX3500 Device FRUs

FRU	Model	Direction of Airflow
RJ-45 management board	QFX3500-MB	FRU-to-port
	QFX3500-MB-RJ45-AFO	Port-to-FRU
SFP management board	QFX3500-MB-SFP-AFI	FRU-to-port
	QFX3500-MB-SFP-AFO	Port-to-FRU
Fan tray	QFX3500-FANAI	FRU-to-port
	QFX3500-FAN-AFO	Port-to-FRU
AC power supply	• JPSU-650W-AC-AFI • QFXC01-PWRACI-650A	FRU-to-port
	JPSU-650W-AC-AFO	Port-to-FRU
DC power supply	JPSU-650W-DC-AFI	FRU-to-port
	JPSU-650W-DC-AFO	Port-to-FRU

Copyright © 2018, Juniper Networks, Inc.

The chassis includes a fan speed-control system. Under normal operating conditions, fans operate at reduced speed to reduce noise and power consumption.

Temperature sensors in the chassis monitor the temperature within the chassis. The system raises an alarm if a fan fails or if the temperature inside the chassis rises above permitted levels. If the temperature inside the chassis rises above the threshold, the device shuts down automatically. You can see the status of fans and the temperature remotely through the CLI by issuing the operational mode command **show chassis environment**.

You cannot replace a single fan module. If one or more fan modules fail, you must replace the entire fan tray or management board.

Related Documentation

- Field-Replaceable Units in a QFX3500 Device on page 119
- Installing a Fan Tray in a QFX3500 Device on page 649
- Removing a Fan Tray from a QFX3500 Device on page 651
- Installing a Management Board in a QFX3500 Device on page 652
- Removing a Management Board from a QFX3500 Device on page 654

Management Board for a QFX3500 Device

The management board for a QFX3500 device (see Figure 90 on page 128) is a field-replaceable unit (FRU) that you install on the front panel.

CAUTION: **You must power off the QFX3500 device before replacing the management board.**

Figure 90 on page 128 shows the management board.

Figure 90: Management Board for a QFX3500 Device

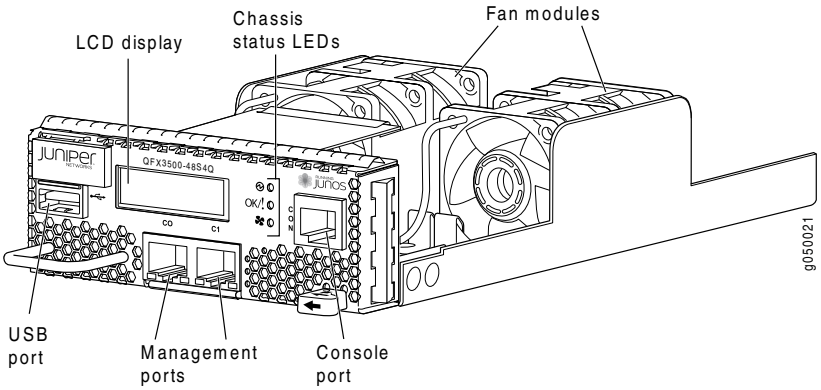

The management board contains the following components on the faceplate:

Copyright © 2018, Juniper Networks, Inc.

- LCD panel—The LCD panel displays the device hostname and the number of active alarms.

  TIP: Alternatively, you can use the **show chassis lcd** CLI command to view what is currently displayed on the LCD panel.

- Chassis status LEDs
- USB port
- Console (**CON**) port (RJ-45)
- Management (**C0** and **C1**) ports

There are two types of management boards:

- RJ-45 management board—Provides two 1000BASE-T RJ-45 management ports.
  - If you are using the QFX3500 device as a Node device in a QFabric system, see "Cable Specifications for Copper-Based Control Plane Connections for the QFabric System" on page 265 for information about the required cables.
  - If you are using the QFX3500 device as a standalone switch, see "Cable Specifications for Console and Management Connections for the QFX Series" on page 268 for information about the required cables.
- SFP management board—Provides two 1-Gbps small form-factor pluggable (SFP) management ports. See *Determining Interface Support for the QFX3500 Device* for information about the supported transceivers and required cables.

In addition to the fan trays, two fan modules on the management board provide airflow to cool the chassis. The management board provides FRU-side-to-port-side or port-side-to-FRU-side airflow depending on the device model you purchase. Table 26 on page 129 lists the different management boards and their direction of airflow. The management boards are designed so that they can only be inserted into the QFX3500 model that supports the same airflow type.

NOTE: The front panel of the device where the power supplies, fan trays, and management boards are located is the FRU side of the device.

Table 26: Airfow Direction in QFX3500 Management Boards

FRU	Model	Direction of Airflow
RJ-45 management board	QFX3500-MB	FRU-to-port
	QFX3500-MB-RJ45-AFO	Port-to-FRU
SFP management board	QFX3500-MB-SFP-AFI	FRU-to-port
	QFX3500-MB-SFP-AFO	Port-to-FRU

Copyright © 2018, Juniper Networks, Inc.

Related Documentation

- Chassis Status LEDs on a QFX3500 Device on page 757
- USB Port Specifications for the QFX Series on page 257
- Connecting a QFX Series Device to a Management Console on page 386
- Connecting a QFX3500 Node Device to a Copper-Based QFX3000-G QFabric System Control Plane Network on page 515
- *Connecting a Device to a Network for Out-of-Band Management*
- Cooling System and Airflow for a QFX3500 Device on page 124

AC Power Supply for a QFX3500, QFX3600, or QFX3600-I Device

The power supplies in QFX3500, QFX3600, and QFX3600-I devices (see Figure 72 on page 111) are hot-removable and hot-insertable field-replaceable units (FRUs) that you can install on the front panel without powering off the device or disrupting the switching function.

The AC power supply in QFX3500, QFX3600, and QFX3600-I devices is 650 W.

Figure 91: AC Power Supply in QFX3500, QFX3600, or QFX3600-I Devices

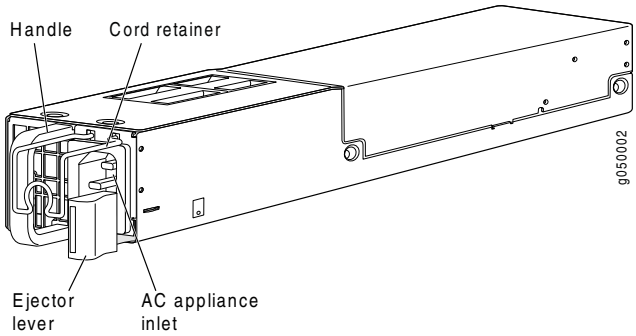

The power supply provides FRU-to-port or port-to-FRU airflow depending on the product SKU you purchase. On legacy switches, or switches with an LCD, this airflow is called back-to-front and front-to-back. The power supplies either have labels on the handles that indicate the direction of the airflow or they have color-coded handles with a fan icon. See Figure 74 on page 111 for an example of the power supply with the fan icon. A power supply with a blue handle denotes FRU-to-port airflow; a power supply with a gold-colored handle denotes port-to-FRU airflow.

Copyright © 2018, Juniper Networks, Inc.

Figure 92: An Arrow Icon and AFI Label Identifying Airflow Direction on Power Supply Handle

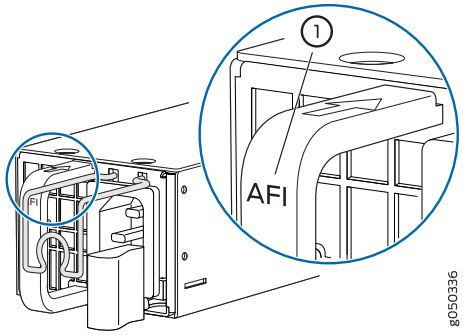

Figure 93: A Fan Icon Identifying Airflow Direction on Power Supply Handle

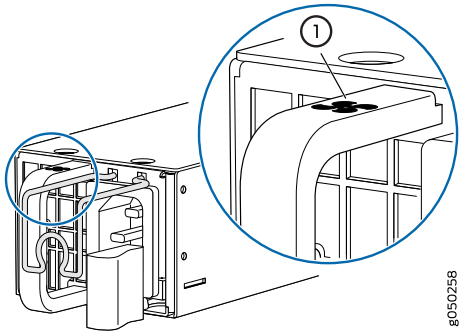

CAUTION: Verify that the direction of the airflow on the power supply handle matches the direction of airflow in the chassis. Ensure that each power supply you install in the chassis has the same airflow direction. If you install power supplies with two different airflow directions, Junos OS raises an alarm, and the status (OK/!) LED blinks amber.

Table 20 on page 112 shows the different power supplies and their direction of airflow.

Table 27: Airfow Direction in QFX3500, QFX3600, or QFX3600-I AC Power Supplies

Model	Direction of Airflow
• JPSU-650W-AC-AFI • QFXC01-PWRACI-650A	FRU-to-port
JPSU-650W-AC-AFO	Port-to-FRU

To avoid electrical injury, carefully follow instructions in "Connecting AC Power to a QFX3500, QFX3600, or QFX3600-I Device" on page 463.

Related Documentation

- AC Power Cord Specifications for a QFX Series Device on page 292
- AC Power Supply LEDs on a QFX3500, QFX3600, or QFX3600-I Device on page 753

- Front Panel of a QFX3500 Device on page 122
- Field-Replaceable Units in a QFX3500 Device on page 119
- AC Power Specifications for a QFX3500 Device on page 299
- Prevention of Electrostatic Discharge Damage on page 360

DC Power Supply for a QFX3500, QFX3600, or QFX3600-I Device

The power supplies in a QFX3500, QFX3600, and QFX3600-I device (see Figure 75 on page 113 and Figure 76 on page 113) are hot-removable and hot-insertable field-replaceable units (FRUs) that you can install in the device without powering off the device or disrupting the switching function.

The DC power supply in QFX3500, QFX3600, and QFX3600-I devices is 650 W.

NOTE: The V+ terminals are referred to as +RTN and V– terminals are referred to as –48 V in "DC Power Wiring Sequence Warning" on page 367 and "DC Power Electrical Safety Guidelines" on page 364.

Figure 94: DC Power Supply for a QFX3500, QFX3600, or QFX3600-I Device

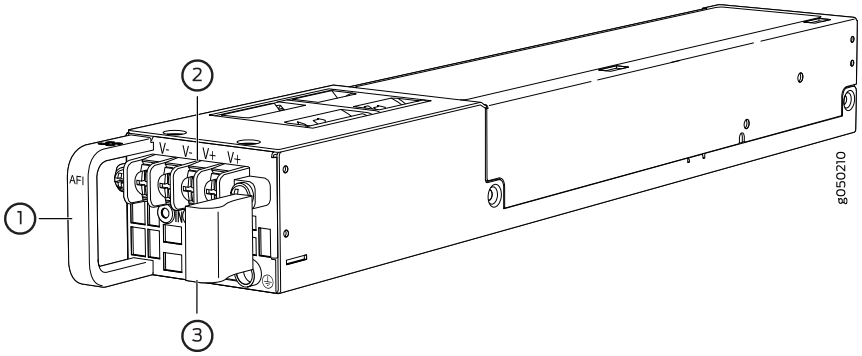

1—Handle	3—Ejector lever
2—Terminal block	

Copyright © 2018, Juniper Networks, Inc.

Figure 95: DC Power Supply Faceplate

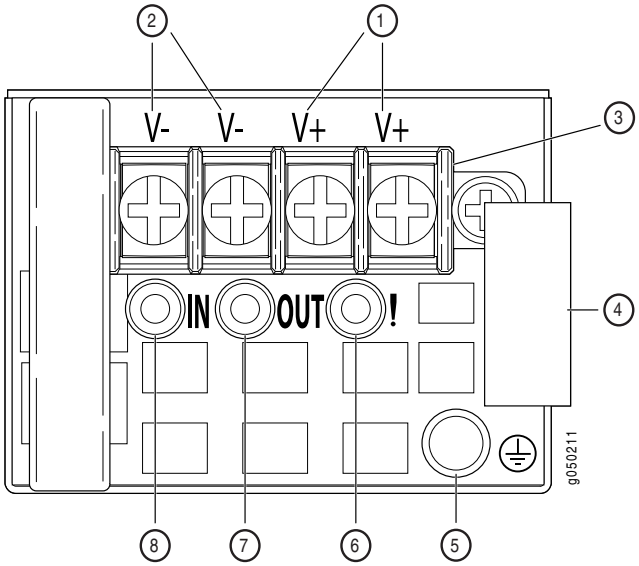

1—Shunt positive input terminals	5—ESD grounding point
2—Shunt negative input terminals	6—Fault LED
3—Terminal block	7—Output LED
4—Ejector lever	8—Input LED

CAUTION: The V+ terminals are shunted internally together, as are the V- terminals. The same polarity terminal can be wired together from the same source to provide an additional current path in a higher power chassis. Do not connect the terminals to different sources.

To supply sufficient power, terminate the DC input wiring on a facility DC source that is capable of supplying a minimum of 7 A at –48 VDC for QFX3500 and 8 A a5 –48 VDC for QFX3600..

The power supply provides FRU-to-port or port-to-FRU airflow depending on the SKU you purchase. The power supplies have labels and arrows on the handles that depict the direction of airflow (see Figure 77 on page 114). The label **AFI** denotes FRU-to-port airflow. **AFO** denotes port-to FRU airflow.

Figure 96: Label Identifying Airflow Direction on Power Supply Handle

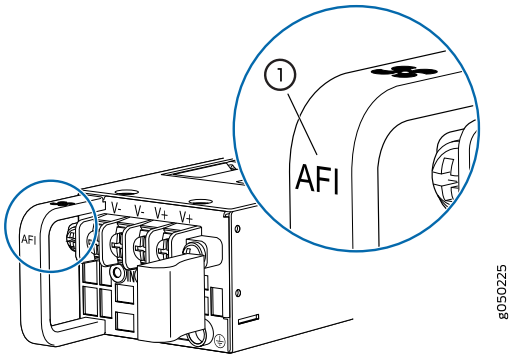

1— Airflow in indicator	

CAUTION: Verify that the airflow direction of the power supply handle matches the direction of airflow in the chassis. Ensure that each power supply you install in the chassis has the same airflow direction. If you install power supplies with two different airflow directions, Junos OS raises an alarm, and the status (OK/!) LED blinks amber.

Table 21 on page 114 shows the different power supplies and their direction of airflow.

Table 28: Airflow Direction in QFX3500, QFX3600, and QFX3600-I Device DC Power Supplies

Model	Direction of Airflow
JPSU-650W-DC-AFI	FRU-to-port
JPSU-650W-DC-AFO	Port-to-FRU

To avoid electrical injury, carefully follow instructions in "Connecting DC Power to a QFX3500, QFX3600, or QFX3600-I Device" on page 466.

Related Documentation

- DC Power Supply LEDs on a QFX3500, QFX3600, or QFX3600-I Device on page 754
- DC Power Specifications for a QFX3500 Device on page 301
- DC Power Specifications for a QFX3600 or QFX3600-I Device on page 297

Grounding Cable and Lug Specifications for a QFX3500 Device

For installations that require a separate grounding conductor to the chassis, the device must be adequately grounded before power is connected to ensure proper operation and to meet safety and electromagnetic interference (EMI) requirements. To ground a QFX3500 device, connect a grounding cable to earth ground and then attach it to the chassis grounding points.

Copyright © 2018, Juniper Networks, Inc.

WARNING: The device is pluggable type A equipment installed in a restricted-access location. It has a separate protective earthing terminal provided on the chassis in addition to the grounding pin of the power supply cord. This separate protective earthing terminal must be permanently connected to earth ground for installations that require a separate grounding conductor to the chassis.

CAUTION: Before device installation begins, a licensed electrician must attach a cable lug to the grounding cables that you supply. See "Connecting Earth Ground to a QFX3500 Device" on page 480. A cable with an incorrectly attached lug can damage the device.

Before connecting the device to earth ground, review the following information:

- A protective earthing terminal bracket is provided in the accessory kit for connecting the device to earth ground. This L-shaped bracket attaches to a post on the QFX3500 device left front mounting bracket, providing a protective earthing terminal for the device. The grounding points are studs sized for M4 hex nuts. The grounding points are spaced at 0.625 in. (15.86 mm). M4 hex nuts with integrated washers are provided in the accessory kit.
- The grounding lug required is a Panduit LCD10-10A-L or equivalent. This grounding lug is provided in the accessory kit. The grounding lug provided accommodates 14–10 AWG (2–5.3 mm^2) stranded wire.
- The grounding cable that you provide for a QFX3500 device must be 14 AWG (2 mm^2), minimum 60° C wire, or as permitted by the local code.

Related Documentation

- AC Power Supply for a QFX3500, QFX3600, or QFX3600-I Device on page 110
- Connecting AC Power to a QFX3500, QFX3600, or QFX3600-I Device on page 463

Copyright © 2018, Juniper Networks, Inc.

CHAPTER 7

EX4300 Overview

- EX4300 Switches Hardware Overview on page 137
- Field-Replaceable Units in EX4300 Switches on page 153
- Chassis Physical Specifications for EX4300 Switches on page 155
- Cooling System and Airflow in an EX4300 Switch on page 156
- AC Power Supply in EX4300 Switches on page 162
- DC Power Supply in EX4300 Switches on page 170
- Connecting Earth Ground to an EX Series Switch on page 175

EX4300 Switches Hardware Overview

Juniper Networks EX4300 Ethernet Switches provide connectivity for high-density environments and scalability for growing networks. These switches can be deployed wherever you need high density of Gigabit Ethernet ports or redundancy. Typically, EX4300 switches are used in large branch offices, campus wiring closets, and data centers. In data centers, EX4300 switches can be positioned as top-of-rack switches; the top devices in a rack to provide connectivity for all the devices in the rack and provide options for optimized airflow (hot aisle/cold aisle).

Three variants of the EX4300 switches are available—24-port, 32-port, and 48-port switches, with or without PoE+, with AC or DC power supplies, and with different airflow directions. EX4300 switches also provide uplink ports and a slot for installing an optional uplink module.

You can manage EX4300 switches except EX4300-48MP and EX4300-48MP-S switches by using the same interfaces that you use for managing other devices running Juniper Networks Junos operating system (Junos OS)—the CLI, the J-Web graphical interface, and Junos Space. You can manage EX4300-48MP and EX4300-48MP-S switches by using the the CLI.

- Software on page 138
- EX4300 Switches First View on page 138
- Uplink Modules on page 145
- Virtual Chassis on page 147
- Power Supplies on page 148

- Fan Modules on page 149
- EX4300 Switch Components on page 150

Software

Juniper Networks EX Series Ethernet Switches run Junos OS, which provides Layer 2 and Layer 3 switching, routing, and security services. The same Junos OS code base that runs on EX Series switches also runs on all Juniper Networks M Series, MX Series, and T Series routers, and SRX Series Services Gateways.

EX4300 Switches First View

EX4300 switches provide connectivity for high-density Gigabit Ethernet data center top-of-rack, enterprise, and campus aggregation/core deployments. EX4300 switches can be used in large branch offices, campus wiring closets, and data centers. In data centers, these switches can be positioned as the top devices in a rack to provide connectivity for all devices in the rack and provide options for optimized airflow (hot aisle/cold aisle).

To provide carrier-class reliability, EX4300 switches include:

- Dual redundant, load-sharing power supplies that are hot-insertable and hot-removable field-replaceable units (FRUs).
- Two fan modules that are field-replaceable units.
- Redundant Routing Engines in a Virtual Chassis or QFX5100 Virtual Chassis Fabric (VCF) configuration. This redundancy enables graceful Routing Engine switchover (GRES).
- Junos OS with its modular design that enables failed system processes to gracefully restart.

The following EX4300 switches are available:

- 24-Port EX4300 Switches on page 138
- 32-Port EX4300 Switches on page 140
- 48-Port EX4300 Switches on page 141

24-Port EX4300 Switches

The 24-port EX4300 switches—EX4300-24T and EX4300-24P—provide 24 built-in 10/100/1000BASE-T Ethernet network ports and four built-in 40-Gigabit Ethernet quad small form-factor pluggable plus (QSFP+) ports that can house 40-Gigabit QSFP+ transceivers. All network ports in the EX4300-24P switch are equipped for Power over Ethernet (PoE+), whereas EX4300-24T has no PoE+ ports. 24-port EX4300 switches support AC power supply and fan module with front-to-back airflow direction and have a slot for installing an optional 4-port 10-Gigabit Ethernet SFP+ uplink module, which has four 10-Gigabit Ethernet small form-factor pluggable plus (SFP+) ports that can house four 10-gigabit small form-factor pluggable (SFP+) transceivers, four 1-gigabit small form-factor pluggable (SFP) transceivers, or a combination of four SFP+ and SFP transceivers.

 Copyright © 2018, Juniper Networks, Inc.

Figure 97 on page 139 shows the front panel of a 24-port EX4300 switch.

Figure 97: Front Panel of a 24-Port EX4300 Switch

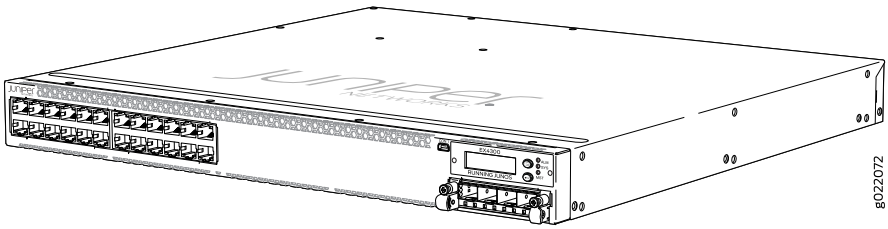

Figure 98 on page 139 shows the rear panel of a 24-port EX4300 switch with power supplies and fan modules installed.

Figure 98: Rear Panel of a 24-Port EX4300 Switch

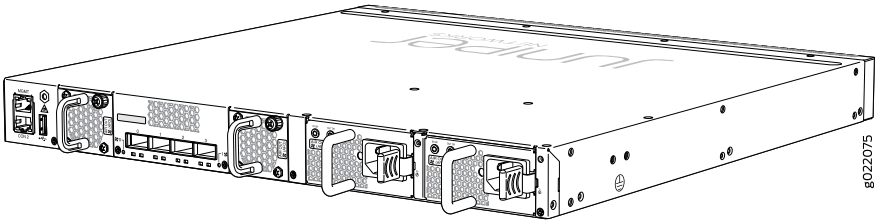

Table 29 on page 139 lists the 24-port EX4300 switch models and their components.

Table 29: Components in 24-Port EX4300 Switches

Switch Models	Built-In Ports	Number of PoE-enabled Ports	Fan Modules Shipped by Default	Power Supply Shipped by Default	Supported Uplink Module
EX4300-24T	24 10/100/1000BASE-T Ethernet ports and four QSFP+ ports	0	Two fan modules; each with an **AIR OUT (AFO)** label.	A 350 W AC power supply with the **AIR OUT (AFO)** label.	4-port 10-Gigabit Ethernet SFP+ uplink module
EX4300-24T-S	24 10/100/1000BASE-T Ethernet ports and four QSFP+ ports	0	Fan modules for this model are not shipped by default; you must order two fan modules labeled either **AIR OUT (AFO)** or **AIR IN (AFI)** separately.	Power supplies for this model are not shipped by default; you must order either AC power supplies or DC power supplies separately.	4-port 10-Gigabit Ethernet SFP+ uplink module
EX4300-24P	24 10/100/1000BASE-T Ethernet ports and four QSFP+ ports	24	Two fan modules; each with an **AIR OUT (AFO)** label.	A 715 W AC power supply with the **AIR OUT (AFO)** label.	4-port 10-Gigabit Ethernet SFP+ uplink module

Copyright © 2018, Juniper Networks, Inc.

Table 29: Components in 24-Port EX4300 Switches (continued)

Switch Models	Built-In Ports	Number of PoE-enabled Ports	Fan Modules Shipped by Default	Power Supply Shipped by Default	Supported Uplink Module
EX4300-24P-S	24 10/100/1000BASE-T Ethernet ports and four QSFP+ ports	24	Fan modules for this model are not shipped by default; you must order two fan modules labeled either **AIR OUT (AFO)** or **AIR IN (AFI)** separately.	Power supplies for this model are not shipped by default; you must order either AC power supplies or DC power supplies separately.	4-port 10-Gigabit Ethernet SFP+ uplink module

You can use the QSFP+ ports as network ports or as Virtual Chassis ports (VCPs) to connect the switch in a Virtual Chassis or a VCF. By default, the built-in QSFP+ ports are configured as VCPs. You can also use the uplink module ports to connect members of a Virtual Chassis or a VCF across multiple wiring closets by configuring the ports as VCPs. For more information about Virtual Chassis, see *EX Series Virtual Chassis Overview*. For more information about VCFs, see *Virtual Chassis Fabric Overview*.

32-Port EX4300 Switches

The 32-port EX4300 switches—EX4300-32F and EX4300-32F-DC—provide 32 built-in 1-Gigabit Ethernet small form-factor pluggable (SFP) network ports that can house SFP transceivers, four built-in 10-Gigabit Ethernet small form-factor pluggable plus (SFP+) ports that can house SFP+ and SFP transceivers, and two built-in quad small form-factor pluggable plus (QSFP+) ports that can house 40-Gigabit QSFP+ transceivers. They support power supply and fan module with front-to-back airflow direction and have a slot for installing an optional uplink module—a 2-port 40-Gigabit Ethernet QSFP+ uplink module that can house two QSFP+ transceivers or an 8-port 10-Gigabit Ethernet SFP+ uplink module that can house eight SFP+ transceivers, eight SFP transceivers, or a combination of eight SFP+ and SFP transceivers.

Figure 99 on page 140 shows the front panel of a 32-port EX4300 switch.

Figure 99: Front Panel of a 32-Port EX4300 Switch

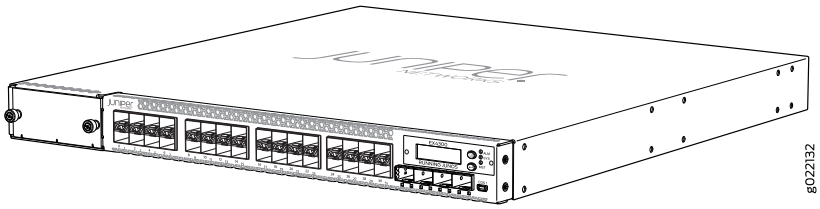

Figure 100 on page 141 shows the rear panel of a 32-port EX4300 switch.

Copyright © 2018, Juniper Networks, Inc.

Figure 100: Rear Panel of a 32-Port EX4300 Switch

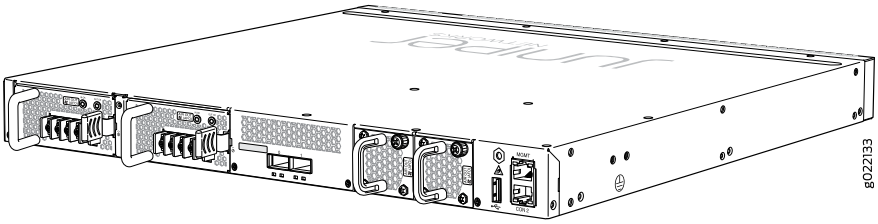

Table 30 on page 141 lists the 32-port EX4300 switch models and their components.

Table 30: Components in 32-Port EX4300 Switches

Switch Models	Built-In Ports	Number of PoE-enabled Ports	Fan Modules	Power Supply Shipped by Default	Supported Uplink Modules
EX4300-32F	32 SFP ports, four SFP+ ports, and two QSFP+ ports	0	Two fan modules; each with an **AIR OUT (AFO)** label.	A 350 W AC power supply with the **AIR OUT (AFO)** label.	2-port 40-Gigabit Ethernet QSFP+ uplink module and 8-port 10-Gigabit Ethernet SFP+ uplink module
EX4300-32F-S	32 SFP ports, four SFP+ ports, and two QSFP+ ports	0	Fan modules for this model are not shipped by default; you must order two fan modules labeled either **AIR OUT (AFO)** or **AIR IN (AFI)** separately.	Power supplies for this model are not shipped by default; you must order either AC power supplies or DC power supplies separately.	2-port 40-Gigabit Ethernet QSFP+ uplink module and 8-port 10-Gigabit Ethernet SFP+ uplink module
EX4300-32F-DC	32 SFP ports, four SFP+ ports, and two QSFP+ ports	0	Two fan modules; each with an **AIR OUT (AFO)** label.	A 550 W DC power supply with the **AIR OUT (AFO)** label.	2-port 40-Gigabit Ethernet QSFP+ uplink module and 8-port 10-Gigabit Ethernet SFP+ uplink module

You can use the built-in QSFP+ ports as network ports or as VCPs to connect the switch in a Virtual Chassis or a VCF. By default, the built-in QSFP+ ports are configured as VCPs. You can also use the uplink module ports to connect members of a Virtual Chassis or a VCF across multiple wiring closets by configuring these ports as VCPs. For more information about Virtual Chassis, see *EX Series Virtual Chassis Overview*. For more information about VCFs, see *Virtual Chassis Fabric Overview*.

48-Port EX4300 Switches

The 48-port EX4300 switches EX4300-48T and EX4300-48P provide 48 built-in 10/100/1000BASE-T Ethernet network ports, with or without PoE+ depending on the switch model, and four built-in quad small form-factor pluggable plus (QSFP+) ports that can house 40-Gigabit QSFP+ transceivers. All network ports in the EX4300-48P switch are equipped for Power over Ethernet (PoE+), whereas EX4300-48T has no PoE+ ports. These switches support AC or DC power supply with different airflow directions. Each switch provides a slot for installing an optional 4-port 10-Gigabit Ethernet SFP+

uplink module, which has four SFP+ ports that can house four SFP+ transceivers, four SFP transceivers, or a combination of four SFP+ and SFP transceivers.

The 48-port EX4300 switches with multigigabit ports—EX4300-48MP and EX4300-48MP-S—provide 24 built-in 10/100/1000BASE-T Ethernet network ports, 24 built-in 100/1000/2500/5000/10000BASE-T Ethernet network ports, and four built-in 40-Gigabit Ethernet quad small form-factor pluggable plus (QSFP+) ports that can house 40-Gigabit QSFP+ transceivers. The 24 built-in 10/100/1000BASE-T Ethernet network ports support 10 Mbps, 100 Mbps, and 1 Gbps speeds. The 24 built-in 100/1000/2500/5000/10000BASE-T Ethernet network ports support 100 Mbps, 1 Gbps, 2.5 Gbps, 5 Gbps, and 10 Gbps speeds. All network ports are equipped for PoE+ and provide up to 95 watts of power. The QSFP+ ports are configured as Virtual Chassis Ports (VCPs) by default. You can use them to connect the switches to other devices in a Virtual Chassis configuration.

These switches support AC power supply with front-to-back airflow. Each switch provides a slot for installing an optional 4-port 10GbE uplink module. The 4-port 10GbE uplink module can house four SFP+ transceivers.

Figure 101 on page 142 shows the front panel of 48 port EX4300 switches except EX4300-48MP and EX4300-48MP-S switches. Figure 102 on page 142 shows the front panel of EX4300-48MP and EX4300-48MP-S switches.

Figure 101: Front Panel of 48-Port EX4300 Switches Except EX4300-48MP and EX4300-48MP-S Switches

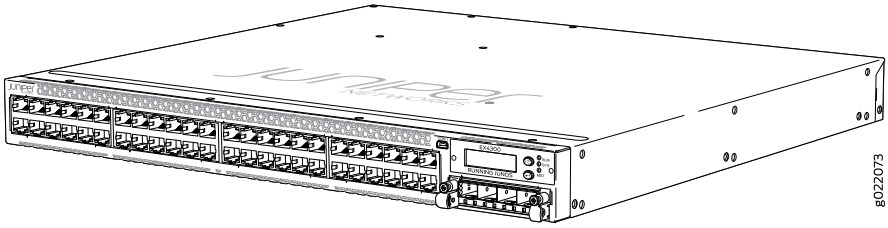

Figure 102: Front Panel of EX4300-48MP and EX4300-48MP-S Switches

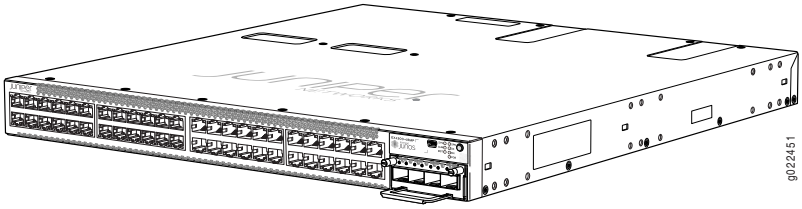

Figure 103 on page 143 shows the rear panel of 48-port EX4300 switches except EX4300-48MP and EX4300-48MP-S switches, with power supplies and fan modules installed. Figure 104 on page 143 shows the rear panel of EX4300-48MP and EX4300-48MP-S switches, with power supplies and fan modules installed.

 Copyright © 2018, Juniper Networks, Inc.

Figure 103: Rear Panel of 48-Port EX4300 Switches Except EX4300-48MP and EX4300-48MP-S Switches

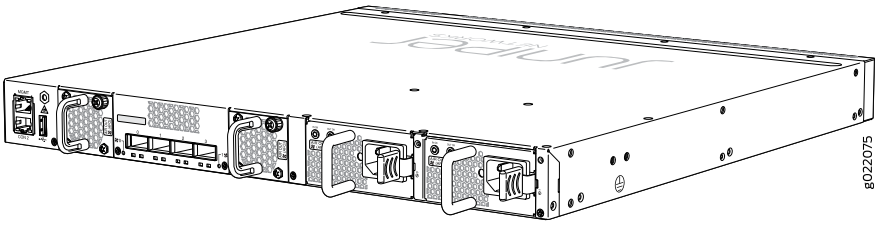

Figure 104: Rear Panel of EX4300-48MP and EX4300-48MP-S Switches

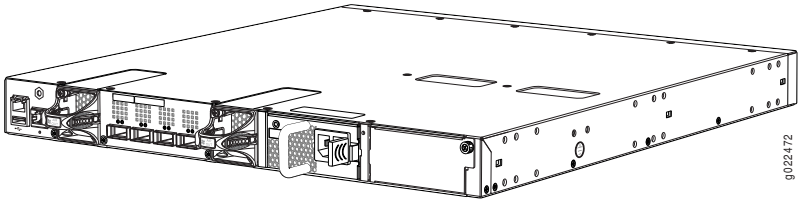

Table 31 on page 143 lists the 48-port EX4300 switch models and their components.

Table 31: Components in 48-Port EX4300 Switches

Switch Models	Built-In Ports	Number of PoE-enabled Ports	Fan Modules	Power Supply Shipped by Default	Supported Uplink Module
EX4300-48T	48 10/100/1000BASE-T Ethernet ports and four QSFP+ ports	0	Two fan modules; each with an **AIR OUT (AFO)** label.	A 350 W AC power supply with the **AIR OUT (AFO)** label.	4-port 10-Gigabit Ethernet SFP+ uplink module
EX4300-48T-S	48 10/100/1000BASE-T Ethernet ports and four QSFP+ ports	0	Fan modules for this model are not shipped by default; you must order two fan modules labeled either **AIR OUT (AFO)** or **AIR IN (AFI)** separately	Power supplies for this model are not shipped by default; you must order either AC power supplies or DC power supplies separately.	4-port 10-Gigabit Ethernet SFP+ uplink module
EX4300-48T-AFI	48 10/100/1000BASE-T Ethernet ports and four QSFP+ ports	0	Two fan modules; each with an **AIR IN (AFI)** label.	A 350 W AC power supply with the **AIR IN (AFI)** label.	4-port 10-Gigabit Ethernet SFP+ uplink module
EX4300-48T-DC	48 10/100/1000BASE-T Ethernet ports and four QSFP+ ports	0	Two fan modules; each with an **AIR OUT (AFO)** label.	A 550 W DC power supply with the **AIR OUT (AFO)** label.	4-port 10-Gigabit Ethernet SFP+ uplink module

Copyright © 2018, Juniper Networks, Inc.

Table 31: Components in 48-Port EX4300 Switches (continued)

Switch Models	Built-In Ports	Number of PoE-enabled Ports	Fan Modules	Power Supply Shipped by Default	Supported Uplink Module
EX4300-48T -DC-AFI	48 10/100/1000BASE-T Ethernet ports and four QSFP+ ports	0	Two fan modules; each with an **AIR IN (AFI)** label.	A 550 W DC power supply with the **AIR IN (AFI)** label.	4-port 10-Gigabit Ethernet SFP+ uplink module
EX4300-48P	48 10/100/1000BASE-T Ethernet ports and four QSFP+ ports	48	Two fan modules; each with an **AIR OUT (AFO)** label.	A 1100 W AC power supply with the **AIR OUT (AFO)** label.	4-port 10-Gigabit Ethernet SFP+ uplink module
EX4300-48P-S	48 10/100/1000BASE-T Ethernet ports and four QSFP+ ports	48	Fan modules for this model are not shipped by default; you must order two fan modules labeled either **AIR OUT (AFO)** or **AIR IN (AFI)** separately	Power supplies for this model are not shipped by default; you must order either AC power supplies or DC power supplies separately.	4-port 10-Gigabit Ethernet SFP+ uplink module
EX4300-48MP	24 10/100/1000BASE-T Ethernet network port, 24 100/1000/ 2500/5000/ 10000BASE-T Ethernet network ports, and four built-in QSFP+) ports that can house 40-Gigabit QSFP+ transceivers	48	Two fan modules; each with an **AIR OUT (AFO)** label.	A 1400 W AC power supply with the **AIR OUT (AFO)** label.	4-port 10GbE uplink module
EX4300-48MP-S	24 10/100/ 1000BASE-T Ethernet network port, 24 100/1000/ 2500/5000/ 10000BASE-T Ethernet network ports, and four built-in QSFP+ ports that can house 40-Gigabit QSFP+ transceivers	48	Fan modules for this model are not shipped by default; you must order two fan modules labeled **AIR OUT (AFO)** separately.	Power supplies for this model are not shipped by default; you must order AC power supplies separately.	4-port 10GbE uplink module

By default, the built-in QSFP+ ports are dedicated VCPs. In 48-port EX4300 switches except EX4300-48MP and EX4300-48MP-S switches, you can use the QSFP+ ports as network ports or as VCPs. You can also use the SFP+ uplink module ports to connect members of a Virtual Chassis or a VCF across multiple wiring closets by configuring these ports as VCPs.

Copyright © 2018, Juniper Networks, Inc.

In EX4300-48MP and EX4300-48MP-S switches, you can use only the built-in QSFP+ ports as VCPs to connect the switch in a Virtual Chassis. You cannot configure the ports on the uplink module in EX4300-48MP and EX4300-48MP-S switches to Virtual Chassis ports (VCPs). You cannot configure the built-in QSFP+ ports as network ports.

NOTE: EX4300-48MP switches can be a part of an EX4300 Virtual Chassis with other EX4300 switches only. If you want to create a Virtual Chassis comprising EX4300-48MP switch and other EX4300 switches, you must connect it to a 40-Gbps port on the other EX4300 switches in the Virtual Chassis configuration. In a Virtual Chassis configuration comprising EX4300-48MP switches, EX4300 switches can be configured only in the line card role.

For more information about Virtual Chassis, see *EX Series Virtual Chassis Overview*. For more information about VCFs, see *Virtual Chassis Fabric Overview*.

Uplink Modules

EX4300 switches provide one slot for installing an optional uplink module. You can use the uplink module ports to connect the switch to other devices. You can also configure these ports on EX4300 switches except EX4300-48MP and EX4300-48MP-S switches as VCPs and use them to interconnect EX4300 switches to form a Virtual Chassis or a VCF configuration by using SFP+ transceivers.

NOTE: You cannot configure the ports on the uplink module in EX4300-48MP and EX4300-48MP-S switches as Virtual Chassis ports (VCPs).

Table 32 on page 146 lists the uplink modules supported on 24-port and 48-port EX4300 switches except EX4300-48MP and EX4300-48MP-S switches. Table 33 on page 146 lists the uplink modules supported on 32-port EX4300 switch models. Table 34 on page 146 lists the uplink module supported on EX4300-48MP and EX4300-48MP-S switches.

Copyright © 2018, Juniper Networks, Inc.

Table 32: Uplink Modules for 24-Port and 48-Port EX4300 Switches Except EX4300-48MP and EX4300-48MP-S Switches

Uplink Module	Description	Supported EX4300 Switch Models	First Junos OS Release
4-port 10-Gigabit Ethernet SFP+ uplink module	The 4-port SFP+ uplink module can house up to four SFP+ transceivers, SFP transceivers, or a combination of SFP+ and SFP transceivers. You can also configure ports on this module as VCPs and use them to connect the switch in a Virtual Chassis or a VCF configuration by using SFP+ transceivers.	• EX4300-24T • EX4300-24P • EX4300-48T • EX4300-48T-AFI • EX4300-48P • EX4300-48T-DC • EX4300-48T-DC-AFI	13.2X50-D10
		• EX4300-24T-S • EX4300-24P-S • EX4300-48T-S • EX4300-48P-S	13.2X51-D26

Table 33: Uplink Modules for 32-Port EX4300 Switches

Uplink Module	Description	Supported EX4300 Switch Models	First Junos OS Release
2-port 40-Gigabit Ethernet QSFP+ uplink module	The QSFP+ uplink module can house up to two QSFP+ transceivers. You can also configure the ports on this module as VCPs and use them to connect the switch in a Virtual Chassis or a VCF configuration.	• EX4300-32F • EX4300-32F-DC	13.2X51-D15
		• EX4300-32F-S	13.2X51-D26
8-port 10-Gigabit Ethernet SFP+ uplink module	The 8-port SFP+ uplink module can house up to eight SFP+ transceivers, SFP transceivers, or a combination of SFP+ and SFP transceivers. You can also configure the ports on this module as VCPs and use them to connect the switch in a Virtual Chassis or a VCF configuration by using SFP+ transceivers.	• EX4300-32F • EX4300-32F-DC	13.2X51-D15
		• EX4300-32F-S	13.2X51-D26

Table 34: Uplink Module for EX4300-48MP and EX4300-48MP-S Switches

Uplink Module	Description	Supported EX4300 Switch Models	First Junos OS Release
4-port 10GbE uplink module	The 4-port 10GbE uplink module can house four SFP+ transceivers.	• EX4300-48MP • EX4300-48MP-S	18.2R1

For more information about uplink modules, see *Uplink Modules in EX4300 Switches*.

Copyright © 2018, Juniper Networks, Inc.

Virtual Chassis

You can interconnect a maximum of 10 EX4300 switches to form a Virtual Chassis. You can operate these interconnected switches as a single, logical device with a single IP address.

You can use the following ports to configure an EX4300 switch in a Virtual Chassis:

- For 24-port and 48-port EX4300 switches except EX4300-48MP and EX4300-48MP-S switches:
  - QSFP+ ports configured as VCPs
  - SFP+ uplink module ports configured as VCPs
- For 32-port EX4300 switches:
  - QSFP+ ports (built-in) or QSFP+ uplink module ports configured as VCPs
  - SFP+ uplink module ports configured as VCPs

  NOTE: **The four built-in SFP+ ports on 32-port EX4300 switches cannot be configured as VCPs.**

- For EX4300-48MP and EX4300-48MP-S switches:
  - QSFP+ ports

  By default, the built-in QSFP+ ports are dedicated VCPs. In 48-port EX4300 switches except EX4300-48MP and EX4300-48MP-S switches, you can use the QSFP+ ports as network ports or as VCPs. You can also use the SFP+ uplink module ports to connect members of a Virtual Chassis or a VCF across multiple wiring closets by configuring these ports as VCPs.

  In EX4300-48MP and EX4300-48MP-S switches, you can use only the built-in QSFP+ ports as VCPs to connect the switch in a Virtual Chassis. You cannot configure the ports on the uplink module in EX4300-48MP and EX4300-48MP-S switches to Virtual Chassis ports (VCPs). You cannot configure the built-in QSFP+ ports as network ports.

  NOTE: **EX4300-48MP switches can be a part of an EX4300 Virtual Chassis with other EX4300 switches only. If you want to create a Virtual Chassis comprising EX4300-48MP switch and other EX4300 switches, you must connect it to a 40-Gbps port on the other EX4300 switches in the Virtual Chassis configuration. In a Virtual Chassis configuration comprising EX4300-48MP switches, EX4300 switches can be configured only in the line card role.**

For more information about Virtual Chassis, see *EX Series Virtual Chassis Overview*. For more information about VCFs, see *Virtual Chassis Fabric Overview*.

Power Supplies

EX4300 switches except EX4300-48MP and EX4300-48MP-S switches support AC or DC power supplies with different airflow directions. EX4300-48MP and EX4300-48MP-S switches support only AC power supplies with front-to-back airflow. Power supplies for the EX4300 switch are fully redundant, load-sharing, and hot-removable and hot-insertable FRUs. All the EX4300 switch models except EX4300-24T-S, EX4300-24P-S, EX4300-32F-S, EX4300-48T-S, EX4300-48P-S, and EX4300-48MP-S switches are shipped with one power supply preinstalled in the rear panel of the switches. EX4300-24T-S, EX4300-24P-S, EX4300-32F-S, EX4300-48T-S, EX4300-48P-S, and EX4300-48MP-S switches are not shipped with preinstalled power supplies; you must order the power supplies separately.

Each power supply has a label—**AIR IN (AFI)** or **AIR OUT (AFO)**—on the faceplate of the power supply that indicates the direction of airflow. **AIR IN (AFI)** labels indicate back-to-front airflow while **AIR OUT (AFO)** labels indicate front-to-back airflow.

Table 35 on page 148 lists the AC and DC power supplies used in EX4300 switches and the direction of airflow in them.

Table 35: Airflow Direction in Power Supplies for EX4300 Switches

Power Supply Rating	Label on Power Supply	Direction of Airflow
350 W AC	**AIR IN (AFI)**	Back-to-front—that is, air intake to cool the chassis is through the vents on the rear panel of the chassis and hot air exhausts through the vents on the front panel of the chassis.
350 W AC	**AIR OUT (AFO)**	Front-to-back—that is, air intake to cool the chassis is through the vents on the front panel of the chassis and hot air exhausts through the vents on the rear panel of the chassis.
550 W DC	**AIR IN (AFI)**	Back-to-front—that is, air intake to cool the chassis is through the vents on the rear panel of the chassis and hot air exhausts through the vents on the front panel of the chassis.
550 W DC	**AIR OUT (AFO)**	Front-to-back—that is, air intake to cool the chassis is through the vents on the front panel of the chassis and hot air exhausts through the vents on the rear panel of the chassis.
715 W AC	**AIR OUT (AFO)**	Front-to-back—that is, air intake to cool the chassis is through the vents on the front panel of the chassis and hot air exhausts through the vents on the rear panel of the chassis.
1100 W AC	**AIR OUT (AFO)**	Front-to-back—that is, air intake to cool the chassis is through the vents on the front panel of the chassis and hot air exhausts through the vents on the rear panel of the chassis.

Copyright © 2018, Juniper Networks, Inc.

Table 35: Airflow Direction in Power Supplies for EX4300 Switches (continued)

Power Supply Rating	Label on Power Supply	Direction of Airflow
1400 W AC NOTE: Only EX4300-48MP and EX4300-48MP-S switches support 1400 W AC power supply.	**AIR OUT (AFO)**	Front-to-back—that is, air intake to cool the chassis is through the vents on the front panel of the chassis and hot air exhausts through the vents on the rear panel of the chassis.

For more information, see "Cooling System and Airflow in an EX4300 Switch" on page 156.

CAUTION: Do not mix:

- AC and DC power supplies in the same chassis.
- Power supplies with different airflow labels (**AIR IN (AFI)** and **AIR OUT (AFO)**) in the same chassis.
- Fan modules with different airflow labels (**AIR IN (AFI)** and **AIR OUT (AFO)**) in the same chassis.
- Power supplies and fan modules with different airflow labels (**AIR IN (AFI)** and **AIR OUT (AFO)**) in the same chassis.

Fan Modules

In the EX4300 switches the fan modules are hot-insertable and hot-removable field-replaceable units (FRUs).

All the EX4300 switch models, except EX4300-24T-S, EX4300-24P-S, EX4300-32F-S, EX4300-48T-S, EX4300-48P-S, and EX4300-48MP-S switches are shipped with two fan modules preinstalled in the rear panel of the switch. EX4300-24T-S, EX4300-24P-S, EX4300-32F-S, EX4300-48T-S, EX4300-48P-S, and EX4300-48MP-S switches are not shipped with preinstalled fan modules; you must order the fan modules separately.

The fan modules are available in two models that have different airflow directions—back-to-front airflow, indicated by the label **AIR IN (AFI)** and front-to-back airflow, indicated by the label **AIR OUT (AFO)**. See "Cooling System and Airflow in an EX4300 Switch" on page 156.

CAUTION: Do not mix:

- Fan modules with different airflow labels (**AIR IN (AFI)** and **AIR OUT (AFO)**) in the same chassis.
- Power supplies with different airflow labels (**AIR IN (AFI)** and **AIR OUT (AFO)**) in the same chassis.

Copyright © 2018, Juniper Networks, Inc.

- Fan modules and power supplies with different airflow labels (**AIR IN (AFI)** and **AIR OUT (AFO)**) in the same chassis.
- AC and DC power supplies in the same chassis.

EX4300 Switch Components

Figure 105 on page 150 shows the components on the front panel of a 24-port EX4300 switch (with an SFP+ uplink module installed).

Figure 105: Components on the Front Panel of a 24-Port EX4300 Switch

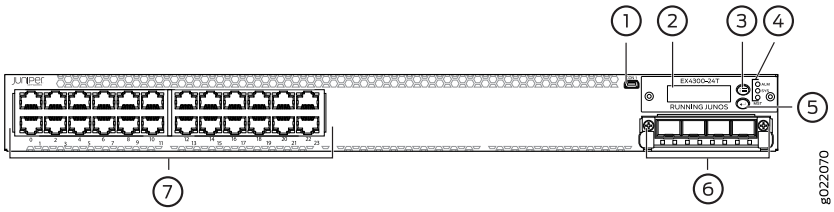

1—Mini-USB console port	5—LCD panel Enter button
2—LCD panel	6—SFP+ uplink module (optional)
3—LCD panel Menu button	7—Network ports
4—Chassis status LEDs	

Figure 106 on page 150 shows the components on the front panel of a 32-port EX4300 switch.

Figure 106: Components on the Front Panel of a 32-Port EX4300 Switch

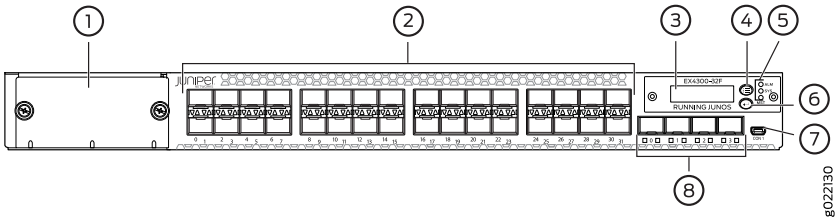

1—Cover panel for uplink module slot	5—Chassis status LEDs
2—SFP network ports	6—LCD panel Enter button
3—LCD panel	7—Mini-USB console port
4—LCD panel Menu button	8—SFP+ uplink ports

Figure 107 on page 151 shows the components on the front panel of a 48-port EX4300 switches except EX4300-48MP and EX4300-48MP-S switches (with an SFP+ uplink module installed).

Copyright © 2018, Juniper Networks, Inc.

Figure 107: Components on the Front Panel of 48-Port EX4300 Switches Except EX4300-48MP and EX4300-48MP-S Switches

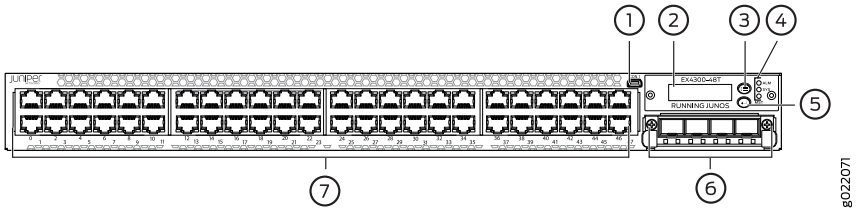

1—Mini-USB console port	5—LCD panel Enter button
2—LCD panel	6—SFP+ uplink module (optional)
3—LCD panel Menu button	7—Network ports
4—Chassis status LEDs	

Figure 108 on page 151 shows the components on the front panel of EX4300-48MP and EX4300-48MP-S switches (with a 4-port 10GbE uplink module installed).

Figure 108: Components on the Front Panel of EX4300-48MP and EX4300-48MP-S Switches

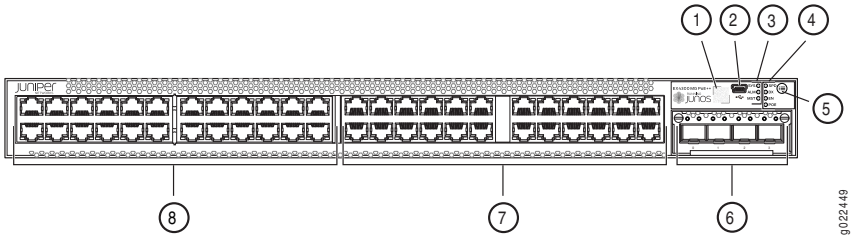

1—QR code	5—Factory Reset/Mode button
2—Mini-USB console port	6—4-port 10GbE uplink module (optional)
3—Chassis status LEDs	7—100/1000/2500/5000/10000 Ethernet Network Ports
4—Port status mode LEDs	8—10/100/1000BASE-T Ethernet Network Ports

Figure 109 on page 152 shows the components on the rear panel of a 24-port and 48-port EX4300 switch except EX4300-48MP and EX4300-48MP-S switches (with two AC power supplies and two fan modules installed).

Figure 109: Components on the Rear Panel of a 24-Port and 48-Port EX4300 Switch Except EX4300-48MP and EX4300-48MP-S Switches

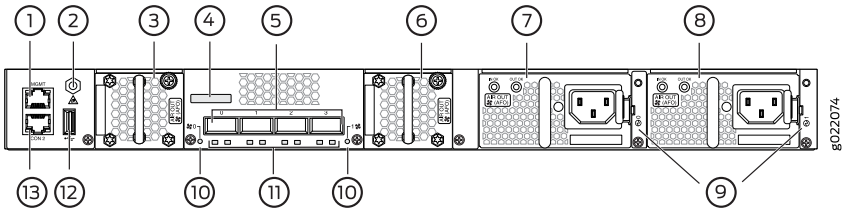

1—Management port	8—AC power supply in slot 1
2—ESD point	9—Power supply slot numbers
3—Fan module in slot 0	10—Fan module slot numbers and LEDs
4—Serial number label	11—QSFP+ port LEDs
5—QSFP+ ports	12—USB port
6—Fan module in slot 1	13—Console port
7—AC power supply in slot 0	

NOTE: DC power supplies are installed in the power supply slots in models that use DC power.

Figure 110 on page 152 shows the components on the rear panel of a 32-port EX4300 switch (with two AC power supplies and two fan modules installed).

Figure 110: Components on the Rear Panel of a 32-Port EX4300 Switch

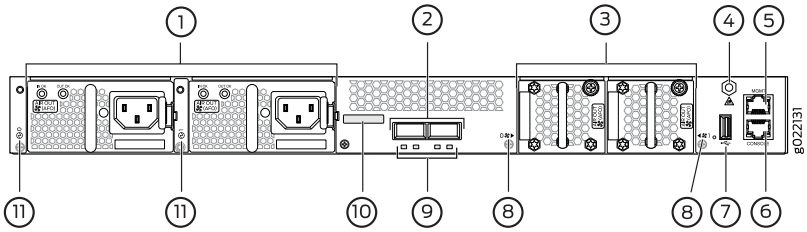

1—AC power supplies in slot 0 and slot 1	7—USB port
2—QSFP+ ports	8—Fan module slot numbers and LEDs
3—Fan modules in slot 0 and slot 1	9—QSFP+ port LEDs
4—ESD point	10—Serial number label
5—Management port	11—Power supply slot numbers
6—Console port	

NOTE: DC power supplies are installed in the power supply slots in models that use DC power.

Figure 111 on page 153 shows the components on the rear panel of EX4300-48MP and EX4300-48MP-S switches (with one AC power supply and two fan modules installed).

Copyright © 2018, Juniper Networks, Inc.

Figure 111: Components on the Rear Panel of EX4300-48MP and EX4300-48MP-S Switches

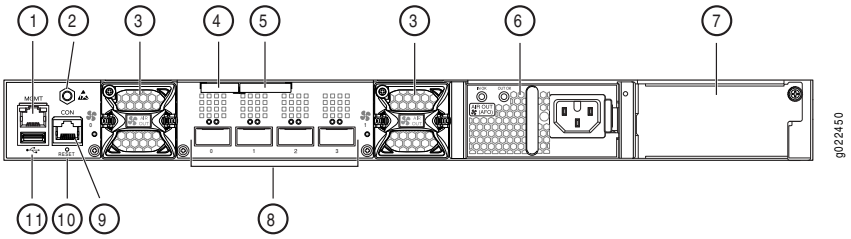

1—Management port	7—Empty slot for AC power supply
2—ESD point	8—QSFP+ ports (dedicated Virtual Chassis ports)
3—Fan module	9—Console port
4—Serial number label	10—Reset button
5—CLEI code label	11—USB port
6—AC power supply in slot 0	

NOTE: **The protective earthing terminal is located on the left side of the chassis. See** "Connecting Earth Ground to an EX Series Switch" on page 175.

Field-Replaceable Units in EX4300 Switches

Field-replaceable units (FRUs) are components that you can replace at your site. The FRUs in EX4300 switches are hot-removable and hot-insertable: You can remove and replace them without powering off the switch. The FRUs in EX4300 switches are:

- Power supplies
- Fan modules
- Uplink module
- Transceivers

NOTE:
The following switch models ship with one power supply and two fan modules preinstalled:

- EX4300-24T
- EX4300-24P
- EX4300-32F
- EX4300-32F-DC
- EX4300-48T
- EX4300-48T-AFI
- EX4300-48P
- EX4300-48MP
- EX4300-48T-DC
- EX4300-48T-DC-AFI

The following switch models ship without any power supply or fan modules preinstalled:

- EX4300-24T-S
- EX4300-24P-S
- EX4300-48T-S
- EX4300-48P-S
- EX4300-48MP-S

Uplink modules and transceivers are not part of the shipping configuration. If you want to purchase any of these components, power supplies, or fan modules for your switch, you must order them separately.

NOTE: If you have a Juniper J-Care service contract, register any addition, change, or upgrade of hardware components at https://www.juniper.net/customers/support/tools/updateinstallbase/ . Failure to do so can result in significant delays if you need replacement parts. This note does not apply if you replace existing components with the same type of component.

Related Documentation

- *Installing and Removing EX4300 Switch Hardware Components*

Copyright © 2018, Juniper Networks, Inc.

Chassis Physical Specifications for EX4300 Switches

The EX4300 switch chassis is a rigid sheet-metal structure that houses all components of the switch. Table 36 on page 155 summarizes the physical specifications of the EX4300 switch chassis.

Table 36: Physical Specifications of the EX4300 Switch Chassis

Description	Value
Chassis height	1.72 in. (4.37 cm)
Chassis width	• 17.36 in. (44.09 cm) • The outer edges of the front-mounting brackets extend the width to 19 in. (48.2 cm)

Chassis depth	• EX4300 switch except EX4300-48MP switch:
	  ◦ 16.38 in. (41.61 cm)
	  ◦ With power supply and uplink module installed: 18.01 in. (45.76 cm)
	• EX4300-48MP switch:
	  ◦ 18.39 in. (46.70 cm)
	  ◦ With fan module installed: 19.64 in. (49.87 cm)

Weight	• EX4300 switch except EX4300-48MP switch (with no power supply and no fan module installed): 13 lb (5.9 kg) • EX4300-48MP switch (with no power supply and no fan module installed): 16.42 lb (7.45 kg) • 350 W AC power supply: 2.4 lb (1.1 kg) • 550 W DC power supply: 2.4 lb (1.1 kg) • 715 W AC power supply: 2.4 lb (1.1 kg) • 1100 W AC power supply: 2.4 lb (1.1 kg) • 1400 W AC power supply: 3.06 lb (1.39 kg) • QSFP+ uplink module: 0.61 lb (0.28 kg) • 4-port SFP+ uplink module: 0.44 lb (0.2 kg) • 8-port SFP+ uplink module: 0.74 lb (0.34 kg) • 4-port10GbE uplink module for EX4300-48MP and EX4300-48MP-S switches: 0.57 lb (0.26 kg) • Fan module: 0.33 lb (0.15 kg)

You can mount an EX4300 switch on a standard 19-in. two-post or four-post rack. You can also mount the switch in a standard 19-in. enclosed cabinet.

Related Documentation

- Installing and Connecting an EX4300 Switch on page 492

Cooling System and Airflow in an EX4300 Switch

The cooling system in an EX4300 switch consists of two fan modules and a single fan in each power supply. EX4300 switches provide back-to-front airflow (air enters through the back of the switch), indicated by the label **AIR IN (AFI)**, or front-to-back (air exhausts through the back of the switch), indicated by the label **AIR OUT (AFO)** or **AIR OUT**—depending on the fan modules and power supplies installed in the switch.

- Fan Modules on page 156
- Airflow Direction in EX4300 Switch Models on page 157
- Front-to-Back Airflow on page 158
- Back-to-Front Airflow on page 160
- Do Not Mix AIR IN (AFI) and AIR OUT (AFO) Components in the Switch on page 161
- Positioning the Switch on page 161
- Fan Module Status on page 161

Fan Modules

In the EX4300 switches the fan modules are hot-insertable and hot-removable field-replaceable units (FRUs).

All the EX4300 switches, except EX4300-24T-S, EX4300-24P-S, EX4300-32F-S, EX4300-48T-S, EX4300-48P-S, and EX4300-48MP-S switches are shipped with two fan modules installed in the rear panel of the switch. EX4300-24T-S, EX4300-24P-S, EX4300-32F-S, EX4300-48T-S, EX4300-48P-S, and EX4300-48MP-S switches are not shipped with fan modules; you must order the fan modules separately. Each switch can accommodate two fan modules in the fan module slots on the rear panel of the switch. The fan module slots are numbered **0** and **1** and each slot has a fan icon next to it.

Figure 112 on page 156 shows the fan module used in EX4300 switches except EX4300-48MP and EX4300-48MP-S switches. Figure 113 on page 157 shows the fan module used in EX4300-48MP and EX4300-48MP-S switches:

Figure 112: Fan Module Used in EX4300 Switches Except EX4300-48MP and EX4300-48MP-S Switches

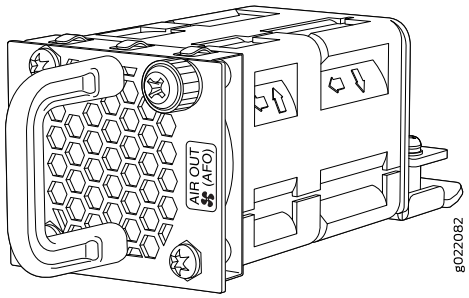

Copyright © 2018, Juniper Networks, Inc.

Figure 113: Fan Module Used in EX4300-48MP and EX4300-48MP-S Switches

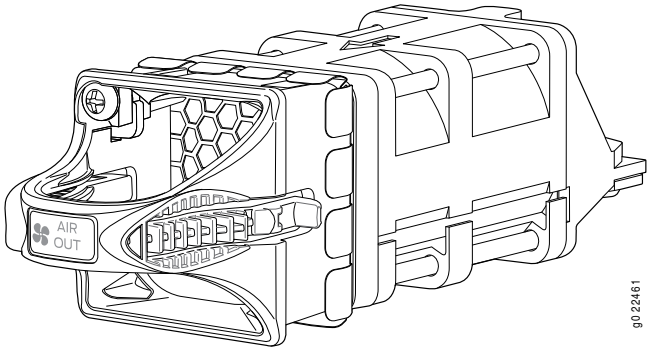

You must remove only one fan module at a time for replacement from the rear panel of the chassis. The switch continues to operate for a limited period of time (30 seconds) during the replacement of the fan module without thermal shutdown.

NOTE: **Both the fan modules must be installed for optimal functioning of the switch.**

For EX4300 switches except EX4300-48MP and EX4300-48MP-S switches, the fan modules are available in two models that have different airflow directions—back-to-front (air enters through the back of the switch), indicated by label **AIR IN (AFI)**, and front-to-back (air exhausts through the back of the switch), indicated by label **AIR OUT (AFO)**. For EX4300-48MP and EX4300-48MP-S switches, the fan module is available in one model that has front-to-back (air exhausts through the back of the switch), indicated by label **AIR OUT.**. Table 37 on page 157 lists the available fan module models and the direction of airflow in them.

Table 37: Fan Modules in EX4300 Switches

Fan Module	Label on the Fan Module
EX4300-FAN	**AIR OUT (AFO)**
EX4300-FAN-AFI	**AIR IN (AFI)**
EX4300-48MP-FAN	**AIR OUT**

Airflow Direction in EX4300 Switch Models

Table 38 on page 158 shows the direction of airflow in EX4300 switch models as shipped.

Table 38: Airflow Direction in EX4300 Switch Models

Model Number	Fan Modules and Power Supply	Direction of Airflow
• EX4300-24T • EX4300-24P • EX4300-32F • EX4300-48T • EX4300-48P • EX4300-48MP	The switch ships with two fan modules and an AC power supply, each with a label **AIR OUT (AFO)**.	Front-to-back—that is, air intake to cool the chassis is through the vents on the front panel of the chassis and hot air exhausts through the vents on the rear panel of the chassis.
• EX4300-32F-DC • EX4300-48T-DC	The switch ships with two fan modules and a DC power supply, each with a label **AIR OUT (AFO)**.	Front-to-back—that is, air intake to cool the chassis is through the vents on the front panel of the chassis and hot air exhausts through the vents on the rear panel of the chassis.
EX4300-48T-AFI	The switch ships with two fan modules and an AC power supply, each with a label **AIR IN (AFI)**.	Back-to-front—that is, air intake to cool the chassis is through the vents on the rear panel of the chassis and hot air exhausts through the vents on the front panel of the chassis.
EX4300-48T-DC-AFI	The switch ships with two fan modules and a DC power supply, each with a label **AIR IN (AFI)**.	Back-to-front—that is, air intake to cool the chassis is through the vents on the rear panel of the chassis and hot air exhausts through the vents on the front panel of the chassis.

CAUTION: Do not mix:

- AC and DC power supplies in the same chassis
- Power supplies and fan modules with different airflow labels (**AIR IN (AFI)** and **AIR OUT (AFO)**) in the same chassis
- Fan modules with different airflow labels (**AIR IN (AFI)** and **AIR OUT (AFO)**) in the same chassis.
- Power supplies and fan modules with different airflow labels (**AIR IN (AFI)** and **AIR OUT (AFO)**) in the same chassis.

Front-to-Back Airflow

In the EX4300 switch models that have front-to-back airflow, the air intake to cool the chassis is through the vents on the front panel of the switch and hot air exhausts through the vents on the rear panel. See Figure 114 on page 159, Figure 115 on page 159, and Figure 116 on page 160.

Copyright © 2018, Juniper Networks, Inc.

Figure 114: Front-to-Back Airflow Through 24-Port and 48-Port EX4300 Switches Except EX4300-48MP and EX4300-48MP-S Switches

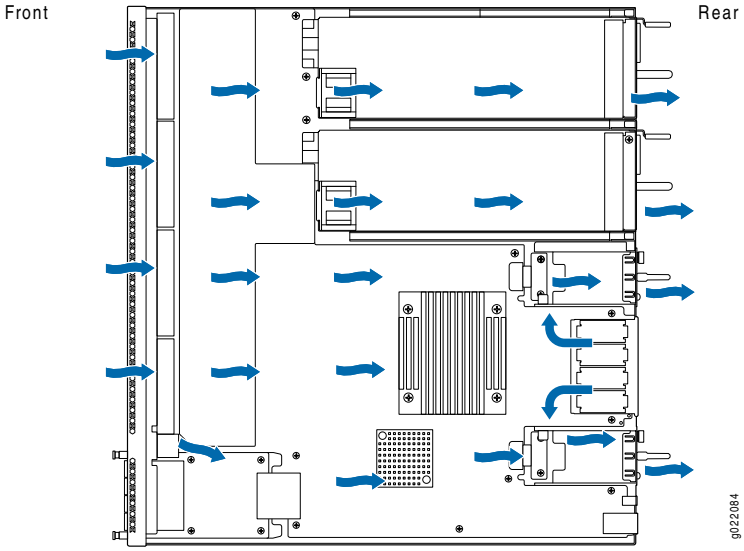

Figure 115: Front -to-Back Airflow on EX4300-48MP and EX4300-48MP-S Switches

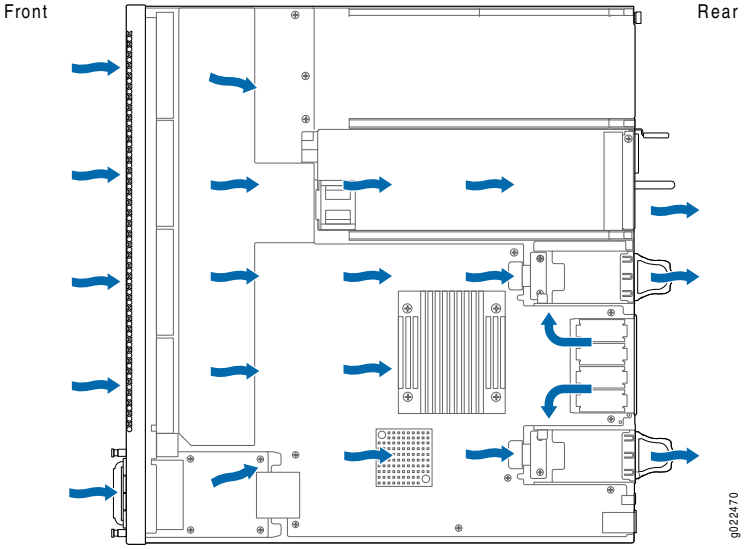

Figure 116: Front-to-Back Airflow Through 32-Port EX4300 Switch Chassis

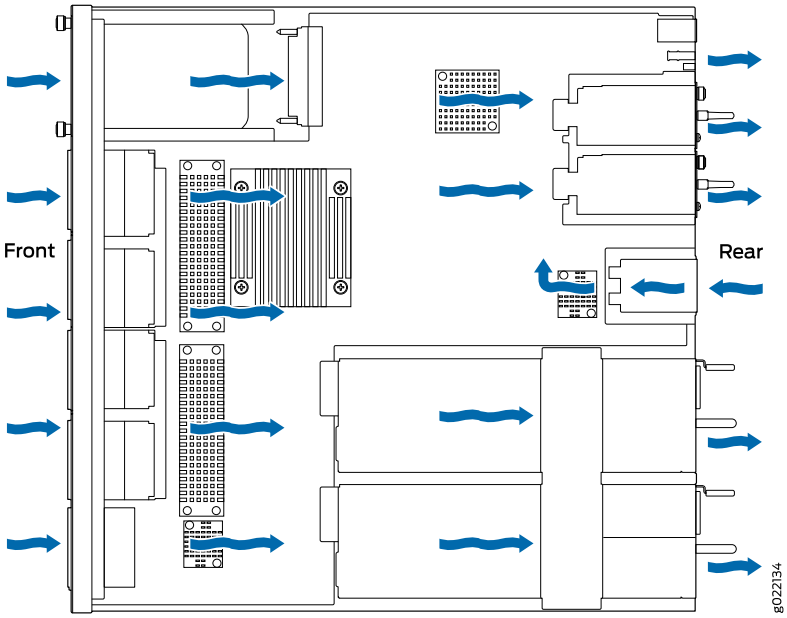

You must install only power supplies that have **AIR OUT (AFO)** labels in switches in which the fan modules have **AIR OUT (AFO)** labels.

Back-to-Front Airflow

In the EX4300 switch models that have back-to-front airflow, the air intake to cool the chassis is through the vents on the rear panel and hot air exhausts through the vents on the front panel of the switch. See Figure 117 on page 160.

Figure 117: Back-to-Front Airflow Through the 24-Port and 48-Port EX4300 Switches Except EX4300-48MP and EX4300-48MP-S Switches

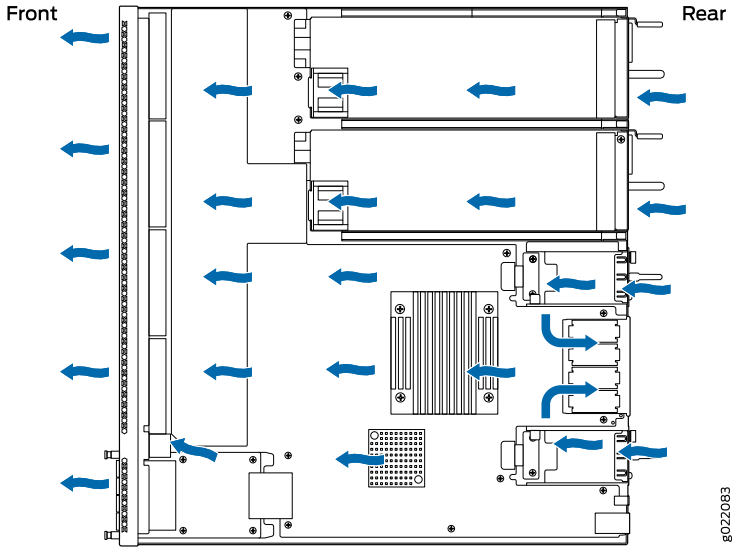

Copyright © 2018, Juniper Networks, Inc.

You must install only power supplies that have **AIR IN (AFI)** labels in switches in which the fan modules have **AIR IN (AFI)** labels.

Do Not Mix AIR IN (AFI) and AIR OUT (AFO) Components in the Switch

Do not mix power supplies and fan modules with different airflow labels (**AIR IN (AFI)** and **AIR OUT (AFO)**) in the same chassis. If the fan modules have **AIR IN (AFI)** labels, the power supplies must also have **AIR IN (AFI)** labels; if the fan modules have **AIR OUT (AFO)** labels, the power supplies must also have **AIR OUT (AFO)** labels.

The labels on the power supplies and fan modules should match the labels on the switch chassis.

Mixing components with **AIR IN (AFI)** and **AIR OUT (AFO)** labels in the same chassis hampers the performance of the cooling system of the switch and leads to overheating of the chassis.

CAUTION: **The system raises an alarm if a fan module fails or if the ambient temperature inside the chassis rises above the acceptable range. If the temperature inside the chassis rises above the threshold temperature, the system shuts down automatically.**

Positioning the Switch

In front-to-back airflow, indicated by the label **AIR OUT (AFO)** on the fan modules and power supplies, hot air exhausts through the vents on the rear panel of the switch. In back-to-front airflow, indicated by the label **AIR IN (AFI)** on the fan modules and power supplies, hot air exhausts through the vents on the front panel of the switch.

In data center deployments, position the switch in such a manner that the **AIR IN (AFI)** labels on switch components are next to the cold aisle, and **AIR OUT (AFO)** labels on switch components are next to the hot aisle.

Fan Module Status

Each switch has a status LED for each fan module next to the fan module slot on the rear panel of the chassis. The Status LED indicates the status of the fan module. Table 14 on page 93 describes the Status LED on the fan module in an EX4300 switch.

Table 39: Fan Module Status LED

LED	State	Description
Status	Green	The fan module is functioning normally.
	Unlit	Indicates one of the following: • The fan module is not installed. • The fan module is not functioning normally. • The airflow direction of the fan module does not match with the airflow direction of other components. However, this state is not applicable for EX4300-48MP and EX4300-48MP-S switches because those switches support only fan modules with front-to-back airflow direction.

Under normal operating conditions, the fan modules operate at a moderate speed. Temperature sensors in the chassis monitor the temperature within the chassis.

The system raises an alarm if a fan module fails or if the ambient temperature inside the chassis rises above the acceptable range. If the temperature inside the chassis rises above the threshold temperature, the system shuts down automatically.

You can check the status of fans and the chassis temperature from the Environment Status option in the Status menu on the LCD panel. See "LCD Panel in EX4300 Switches" on page 765.

AC Power Supply in EX4300 Switches

The AC power supply in EX4300 switches is a hot-insertable and hot-removable field-replaceable unit (FRU): You can install it without powering off the switch or disrupting the switching function.

All the EX4300 switches that are powered by AC power supplies, except EX4300-24T-S, EX4300-24P-S, EX4300-32F-S, EX4300-48T-S, EX4300-48P-S, and EX4300-48MP-S switches are shipped with one AC power supply installed in the rear panel of the switches. EX4300-24T-S, EX4300-24P-S, EX4300-32F-S, EX4300-48T-S, EX4300-48P-S, and EX4300-48MP-S switches are not shipped with power supplies; you must order the power supplies separately.

NOTE: **EX4300 switches except EX4300-48MP and EX4300-48MP-S switches support 350 W, 715 W, and 1100 W AC power supplies. EX4300-48MP and EX4300-48MP-S switches support 715 W, 1100 W, and 1400 W AC power supplies.**

This topic describes the AC power supplies.

CAUTION: **Do not mix:**

Copyright © 2018, Juniper Networks, Inc.

- AC and DC power supplies in the same chassis
- Power supplies with different airflow labels (**AIR IN (AFI)** and **AIR OUT (AFO)**) in the same chassis.
- Fan modules with different airflow labels (**AIR IN (AFI)** and **AIR OUT (AFO)**) in the same chassis.
- Power supplies and fan modules with different airflow labels (**AIR IN (AFI)** and **AIR OUT (AFO)**) in the same chassis.

- Characteristics of an AC Power Supply on page 163
- AC Power Supply Airflow on page 165
- N+0 Redundancy Configuration of AC Power Supplies on page 165
- N+N Redundancy Configuration of AC Power Supplies on page 168

Characteristics of an AC Power Supply

The AC power supplies for EX4300 switches are available in 350 W, 715 W, 1100 W, and 1400 W models. Figure 118 on page 163 shows an AC power supply for EX4300 switches. The AC power supplies support Power over Ethernet (PoE+) in EX4300-24P, EX4300-24P-S, EX4300-48P, EX4300-48P-S, EX4300-48MP, and EX4300-48MP-S models.

Figure 118: AC Power Supply for EX4300 Switches

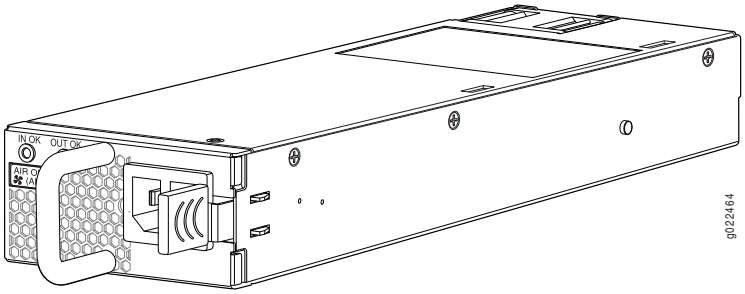

Table 40 on page 163 lists the details of the 350 W, 715 W, 1100 W, and 1400 W AC power supplies used in EX4300 switches.

Table 40: Details of the AC Power Supplies in EX4300 Switches

Details	350 W AC Power Supply	715 W AC Power Supply	1100 W AC Power Supply	1400 W AC Power Supply
Model number	• JPSU-350-AC-AFO-A • JPSU-350-AC-AFI-A	JPSU-715-AC-AFO-A	JPSU-1100-AC-AFO-A	JPSU-1400W-AC-AFO
Field-replaceable unit (FRU) type	Hot-insertable and hot-removable	Hot-insertable and hot-removable	Hot-insertable and hot-removable	Hot-insertable and hot-removable
Power supply weight	2.43 lb (1.1 kg)	2.43 lb (1.1 kg)	2.43 lb (1.1 kg)	3.06 lb (1.39 kg)

Copyright © 2018, Juniper Networks, Inc.

Table 40: Details of the AC Power Supplies in EX4300 Switches (continued)

Details		350 W AC Power Supply	715 W AC Power Supply	1100 W AC Power Supply	1400 W AC Power Supply
Minimum installed in chassis		1	1	1	1
Maximum installed in chassis		2	2	2	2
Power supply slots		Install in power supply slots labeled **PSU 0** and **PSU 1** in the rear panel of the chassis.	Install in power supply slots labeled **PSU 0** and **PSU 1** in the rear panel of the chassis.	Install in power supply slots labeled **PSU 0** and **PSU 1** in the rear panel of the chassis.	Install in power supply slots labeled **PSU 0** and **PSU 1** in the rear panel of the chassis.
AC appliance Inlet NOTE: Each AC appliance inlet requires a dedicated AC power feed.	Number	1	1	1	1
	Type	IEC-320-C13	IEC-320-C13	IEC-320-C15	IEC-320-C15
	Rating	2 A NOTE: EX4300-48MP and EX4300-48MP-S switches do not support this power supply.	• EX4300 switches except EX4300-48MP and EX4300-48MP-S switches—11–5 A • EX4300-48MP and EX4300-48MP-S switches—10 A	• EX4300 switches except EX4300-48MP and EX4300-48MP-S switches—12–6 A • EX4300-48MP and EX4300-48MP-S switches—15 A	12–8 A
Fans		Internal	Internal	Internal	Internal
Airflow		• Front-to-back, indicated by label **AIR OUT (AFO)** • Back-to-front, indicated by label **AIR IN (AFI)**	Front-to-back, indicated by label **AIR OUT (AFO)**	Front-to-back, indicated by label **AIR OUT (AFO)**	Front-to-back, indicated by label **AIR OUT (AFO)**
AC power cord retainer		1	1	1	1
Power supply status LEDs		**IN OK** and **OUT OK**	**IN OK** and **OUT OK**	**IN OK** and **OUT OK**	**IN OK** and **OUT OK**
Operating range		• Low line: 100–120 VAC • High line: 200–240 VAC	• Low line: 100–120 VAC • High line: 200–240 VAC	• Low line: 115–120 VAC • High line: 200–240 VAC	• Low line: 100–140 VAC • High line: 200–240 VAC

To prevent electrical injury while installing or removing AC power supplies, carefully follow instructions in "Installing an AC Power Supply in an EX4300 Switch" on page 683 and "Removing an AC Power Supply from an EX4300 Switch" on page 681.

Copyright © 2018, Juniper Networks, Inc.

AC Power Supply Airflow

Each power supply has its own fan and is cooled by its own internal cooling system.

Each power supply has a label **AIR OUT (AFO)** or **AIR IN (AFI)** on the faceplate of the power supply that indicates the direction of airflow in the power supply.

Table 41 on page 165 lists the AC power supply models and the direction of airflow in them.

Table 41: Airflow Direction in AC Power Supply Models for EX4300 Switches

Model	Label on Power Supply	Direction of Airflow
JPSU-350-AC-AFO-A	**AIR OUT (AFO)**	Front-to-back—that is, air intake to cool the chassis is through the vents on the front panel of the chassis and hot air exhausts through the vents on the rear panel of the chassis.
JPSU-350-AC-AFI-A	**AIR IN (AFI)**	Back-to-front—that is, air intake to cool the chassis is through the vents on the rear panel of the chassis and hot air exhausts through the vents on the front panel of the chassis.
JPSU-715-AC-AFO-A	**AIR OUT (AFO)**	Front-to-back—that is, air intake to cool the chassis is through the vents on the front panel of the chassis and hot air exhausts through the vents on the rear panel of the chassis.
JPSU-1100-AC-AFO-A	**AIR OUT (AFO)**	Front-to-back—that is, air intake to cool the chassis is through the vents on the front panel of the chassis and hot air exhausts through the vents on the rear panel of the chassis.
JPSU-1400W-AC-AFO	**AIR OUT (AFO)**	Front-to-back—that is, air intake to cool the chassis is through the vents on the front panel of the chassis and hot air exhausts through the vents on the rear panel of the chassis.

N+0 Redundancy Configuration of AC Power Supplies

In an *N*+0 redundancy configuration, lower priority PoE ports may be impacted if a power supply fails.

Table 42 on page 165 lists the *N*+0 power calculation for 24-port EX4300 switches that use 350 W, 715 W, and 1100 W power supplies.

Table 42: N+0 AC Power Calculations for 24-Port EX4300 Switches

Power Supply Rating		Total Power (in watts)	Usable System Power (in watts)	Backup Power (in watts)	Base Power (in watts)	Available PoE Power (in watts)	Ports Enabled for PoE+
PSU_0	PSU_1	PSU_0(W) + PSU_1(W)					
350 W AC	–	350	350	0	150	200	6
350 W AC	350 W AC	700	665	0	150	515	17

Copyright © 2018, Juniper Networks, Inc.

Table 42: N+0 AC Power Calculations for 24-Port EX4300 Switches (continued)

Power Supply Rating		Total Power (in watts)	Usable System Power (in watts)	Backup Power (in watts)	Base Power (in watts)	Available PoE Power (in watts)	Ports Enabled for PoE+
PSU_0	PSU_1	PSU_0(W) + PSU_1(W)					
350 W AC	715 W AC	1065	993.5	0	150	720	24
715 W AC	–	715	715	0	150	565	18
715 W AC	715 W AC	1430	1358.5	0	150	720	24
715 W AC	1100 W AC	1815	1705	0	150	720	24
1100 W AC	–	1100	1100	0	150	720	24
1100 W AC	1100 W AC	2200	2090	0	150	720	24
1100 W AC	350 W AC	1450	1340	0	150	720	24

Table 43 on page 166 lists the *N*+0 power calculation for 32-port EX4300 switches that use the 350 W power supply.

NOTE: 32-port EX4300 switches does not support Power over Ethernet (PoE).

Table 43: N+0 AC Power Calculations for 32-Port EX4300 Switches

Power Supply Rating		Total Power (in watts)	Usable System Power (in watts)	Backup Power (in watts)	Base Power (in watts)
PSU_0	PSU_1	PSU_0(W) + PSU_1(W)			
350 W AC	–	350	350	0	164
350 W AC	350 W AC	700	665	0	164

Table 44 on page 167 lists the *N*+0 power calculation for 48-port EX4300 switches except EX4300-48MP and EX4300-48MP-S switches that use 350 W, 715 W, and 1100 W power supplies.

Copyright © 2018, Juniper Networks, Inc.

Table 44: N+0 AC Power Calculations for 48-Port EX4300 Switches Except EX4300-48MP and EX4300-48MP-S Switches

Power Supply Rating		Total Power (in watts)	Usable System Power (in watts)	Backup Power (in watts)	Base Power (in watts)	Available PoE Power (in watts)	Ports Enabled for PoE+
PSU_0	PSU_1	PSU_0(W) + PSU_1(W)					
350 W AC	–	350	350	0	175	175	5
350 W AC	350 W AC	700	665	0	175	490	16
350 W AC	715 W AC	1065	993.5	0	175	818	27
715 W AC	–	715	715	0	175	540	18
715 W AC	715 W AC	1430	1358.5	0	175	1183	39
715 W AC	1100 W AC	1815	1705	0	175	1440	48
1100 W AC	–	1100	1100	0	175	925	30
1100 W AC	1100 W AC	2200	2090	0	175	1440	48
1100 W AC	350 W AC	1450	1340	0	175	1165	38

Table 45 on page 167 lists the *N*+0 power calculation for EX4300-48MP and EX4300-48MP-S switches that use 715 W, 1100 W, and 1400 W power supplies.

NOTE: When operating at low line configuration, the 1400 W power supply operates as 1100 W power supply.

Table 45: N+0 AC Power Calculations for EX4300-48MP and EX4300-48MP-S Switches

Power Supply Rating		Total Power (in watts)	Usable System Power (in watts)	Backup Power (in watts)	Base Power (in watts)	Available PoE Power (in watts)	Ports Enabled for PoE+	Ports Enabled for PoE++
PSU_0	PSU_1	PSU_0(W) + PSU_1(W)						
715 W AC	–	715	679	0	300	379	12	3
715 W AC	715 W AC	1430	1358	0	300	1058	35	11
715 W AC	1100 W AC	1815	1615	0	300	1315	43	13
715 W AC	1400 W AC	2115	1615	0	300	1315	43	13

Copyright © 2018, Juniper Networks, Inc.

Table 45: N+0 AC Power Calculations for EX4300-48MP and EX4300-48MP-S Switches (continued)

Power Supply Rating		Total Power (in watts)	Usable System Power (in watts)	Backup Power (in watts)	Base Power (in watts)	Available PoE Power (in watts)	Ports Enabled for PoE+	Ports Enabled for PoE++
PSU_0	PSU_1	PSU_0(W) + PSU_1(W)						
1100 W AC	–	1100	1045	0	300	745	24	7
1100 W AC	1100 W AC	2200	1670	0	300	1370	45	14
1100 W AC	1400 W AC	2500	1670	0	300	1370	45	14
1400 W AC	–	1400 W AC	1330	0	300	1030	34	10
1400 W AC	1400 W AC	2800	2000	0	300	1700	48	17

N+N Redundancy Configuration of AC Power Supplies

You can configure your switch for *N+N* redundancy, in which *N* power supplies can be removed or fail and the remaining *N* power supplies continue to supply power to the switch without interruption.

Table 46 on page 168 lists the *N+N* power calculation for 24-port EX4300 switches that use 350 W, 715 W, and 1100 W power supplies.

Table 46: N+N AC Power Calculations for 24-Port EX4300 Switches

Power Supply Rating		Total Power (in watts)	Usable System Power (in watts)	Backup Power (in watts)	Base Power (in watts)	Available PoE Power (in watts)	Ports enabled for PoE+
PSU_0	PSU_1						
350 W AC	–	350	350	0	150	200	6
350 W AC	350 W AC	700	350	350	150	200	6
350 W AC	715 W AC	1065	350	350	150	200	6
715 W AC	–	715	715	0	150	565	18
715 W AC	715 W AC	1430	715	715	150	565	18
715 W AC	1100 W AC	1815	715	715	150	565	18
1100 W AC	–	1100	1100	0	150	720	24
1100 W AC	1100 W AC	2200	1100	1100	150	720	24
1100 W AC	350 W AC	1450	350	350	150	200	6

Copyright © 2018, Juniper Networks, Inc.

Table 47 on page 169 lists the *N+N* power calculation for 32-port EX4300 switches that use 350 W power supplies.

NOTE: 32-port EX4300 switches does not support Power over Ethernet (PoE).

Table 47: N+N AC Power Calculations for 32-Port EX4300 Switches

Power Supply Rating		Total Power (in watts)	Usable System Power (in watts)	Backup Power (in watts)	Base Power (in watts)
PSU_0	PSU_1				
350 W AC	–	350	350	0	177
350 W AC	350 W AC	700	350	350	177

Table 48 on page 169 lists the *N+N* power calculation for 48-port EX4300 switches except EX4300-48MP and EX4300-48MP-S switches that use 350 W, 715 W, and 1100 W power supplies.

Table 48: N+N AC Power Calculations for 48-Port EX4300 Switches Except EX4300-48MP and EX4300-48MP-S Switches

Power Supply Rating		Total Power (in watts)	Usable System Power (in watts)	Backup Power (in watts)	Base Power (in watts)	Available PoE Power (in watts)	Ports enabled for PoE+
PSU_0	PSU_1						
350 W AC	–	350	350	0	175	175	5
350 W AC	350 W AC	700	350	350	175	175	5
350 W AC	715 W AC	1065	350	350	175	175	5
715 W AC	–	715	715	0	175	540	18
715 W AC	715 W AC	1430	715	715	175	540	18
715 W AC	1100 W AC	1815	715	715	175	540	18
1100 W AC	–	1100	1100	0	175	925	30
1100 W AC	1100 W AC	2200	1100	1100	175	925	30
1100 W AC	350 W AC	1450	350	350	175	175	5

Table 49 on page 170 lists the *N+N* power calculation for EX4300-48MP and EX4300-48MP-S switches that use 715 W, 1100 W, and 1400 W power supplies.

Copyright © 2018, Juniper Networks, Inc.

NOTE: When operating at low line configuration, the 1400 W power supply operates as 1100 W power supply.

Table 49: N+N AC Power Calculations for EX4300-48MP and EX4300-48MP-S Switches

Power Supply Rating		Total Power (in watts)	Usable System Power (in watts)	Backup Power (in watts)	Base Power (in watts)	Available PoE Power (in watts)	Ports enabled for PoE+	Ports enabled for PoE++
PSU_0	PSU_1							
715 W AC	–	715	679	0	300	379	12	3
715 W AC	715 W AC	1430	679	679	300	379	12	3
715 W AC	1100 W AC	1815	679	679	300	379	12	3
715 W AC	1400 W AC	2115	679	679	300	379	12	3
1100 W AC	–	1100	1045	0	300	745	24	7
1100 W AC	1100 W AC	2200	1045	1045	300	745	24	7
1100 W AC	1400 W AC	2500	1045	1045	300	745	24	7
1400 W AC	–	1400	1330	0	300	1030	34	10
1400 W AC	1400 W AC	2800	1330	1330	300	1030	34	10

Related Documentation

- AC Power Supply Specifications for EX4300 Switches on page 303
- Installing an AC Power Supply in an EX4300 Switch on page 683

DC Power Supply in EX4300 Switches

The DC power supply in EX4300 switches is a hot-insertable and hot-removable field-replaceable unit (FRU): You can install it without powering off the switch or disrupting the switching function.

NOTE: EX4300-24T, EX4300-24P, EX4300-32F, EX4300-48T, EX4300-48T-AFI, EX4300-48P, EX4300-48MP, and EX4300-48MP-S models do not support DC power. EX4300-24T-S, EX4300-24P-S, EX4300-32F-S, EX4300-32F-DC, EX4300-48T-S, EX4300-48T-DC, EX4300-48T-DC-AFI, and EX4300-48P-S models support DC power.

All the EX4300 switches that are powered by DC power supplies except EX4300-24T-S, EX4300-24P-S, EX4300-32F-S, EX4300-48T-S, and EX4300-48P-S switches are

Copyright © 2018, Juniper Networks, Inc.

shipped with one DC power supply installed in the rear panel of the switches. EX4300-24T-S, EX4300-24P-S, EX4300-32F-S, EX4300-48T-S, and EX4300-48P-S switches are not shipped with power supplies; you must order the power supplies separately.

This topic describes the DC power supplies.

CAUTION: Do not mix:

- AC and DC power supplies in the same chassis
- Power supplies with different airflow labels (**AIR IN (AFI)** and **AIR OUT (AFO)**) in the same chassis.
- Fan modules with different airflow labels (**AIR IN (AFI)** and **AIR OUT (AFO)**) in the same chassis.
- Power supplies and fan modules with different airflow labels (**AIR IN (AFI)** and **AIR OUT (AFO)**) in the same chassis.

- Characteristics of a DC Power Supply on page 171
- DC Power Supply Airflow on page 172
- N+0 Redundancy Configuration of DC Power Supplies on page 173
- N+N Redundancy Configuration of DC Power Supplies on page 174

Characteristics of a DC Power Supply

EX4300 switches support 550 W DC power supply (see Figure 119 on page 171).

Figure 119: DC Power Supply for an EX4300 Switch

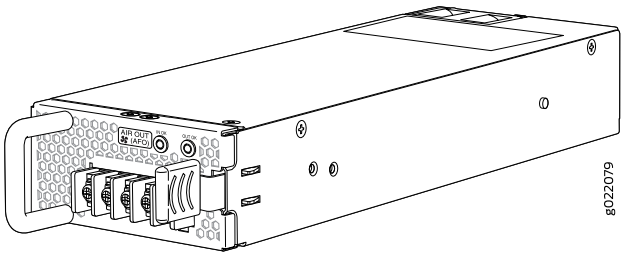

You can install up to two DC power supplies in an EX4300 switch. Power supplies are installed in the power supply slots labeled **PSU 0** and **PSU 1** in the rear panel of the chassis.

Table 50 on page 172 lists the details of the 550 W DC power supplies used in EX4300 switches.

Table 50: Details of the DC Power Supplies in EX4300 Switches

Details	550 W DC Power Supply
Model number	• JPSU-550-DC-AFO-A • JPSU-550-DC-AFI-A
Field-replaceable unit (FRU) type	Hot-insertable and hot-removable
Power supply weight	2.43 lb (1.1 kg)
Minimum installed in chassis	1
Maximum installed in chassis	2
Power supply slots	Install in power supply slots labeled **PSU 0** and **PSU 1** in the rear panel of the chassis.
Fans	Internal
Airflow	• Front-to-back, indicated by label **AIR OUT (AFO)** • Back-to-front, indicated by label **AIR IN (AFI)**
Power supply status LEDs	**IN OK** and **OUT OK**
DC input current rating	4 A
Operating range	–38 through –60 VDC NOTE: The minimum input power required to power on the switch is –43.5 +/– 0.5 VDC. After the switch is powered on, the operating range is –38 through –60 VDC.

To prevent electrical injury while installing or removing DC power supplies, carefully follow instructions in *Installing a DC Power Supply in an EX4300 Switch* and *Removing a DC Power Supply from an EX4300 Switch*.

DC Power Supply Airflow

Each power supply has its own fan and is cooled by its own internal cooling system.

Each power supply has a label **AIR OUT (AFO)** or **AIR IN (AFI)** on the faceplate of the power supply that indicates the direction of airflow in the power supply.

Table 51 on page 173 lists the DC power supply models and the direction of airflow in them.

 Copyright © 2018, Juniper Networks, Inc.

Table 51: Airflow Direction in DC Power Supply Models for EX4300 Switches

Model	Label on Power Supply	Direction of Airflow
JPSU-550-DC-AFO-A	**AIR OUT (AFO)**	Front-to-back—that is, air intake to cool the chassis is through the vents on the front panel of the chassis and hot air exhausts through the vents on the rear panel of the chassis.
JPSU-550-DC-AFI-A	**AIR IN (AFI)**	Back-to-front—that is, air intake to cool the chassis is through the vents on the rear panel of the chassis and hot air exhausts through the vents on the front panel of the chassis.

N+0 Redundancy Configuration of DC Power Supplies

In an *N*+0 redundancy configuration, no power is reserved for resiliency regardless of number of power supplies installed in the switch.

Depending on the power supplies installed in the switch, you can determine the system power budget.

- If one power supply is installed in the switch:

  System power budget = Output wattage of the installed power supply (PSU(W))

- If two power supplies are installed in the switch:
  System power budget = (Sum of the output wattage of the two power supplies) – (10% of the output wattage of the installed power supply)

  System power budget = $PSU_0(W) + PSU_1(W) – (0.10 x (PSU(W))$

Table 52 on page 173 lists the *N*+0 power calculation for EX4300 switches that use 550 W DC power supplies.

NOTE: The DC power supply in the switch does not support Power over Ethernet (PoE); you can use either an external power injector or an AC power supply to supply power to PoE devices that you connect to the switch. 32-port EX4300 switches does not support Power over Ethernet (PoE).

Table 52: N+0 DC Power Calculations for EX4300 Switch Configurations

Switch Configuration	Number of Power Supplies	Total Power (in watts)	Usable System Power (in watts)	Backup Power (in watts)	Base Power (in watts)
24-port EX4300 switch	1	550	550	0	150
	2	1100	1045	0	150
32-port EX4300 switch	1	550	550	0	149
	2	1100	550	550	160

Copyright © 2018, Juniper Networks, Inc.

Table 52: N+0 DC Power Calculations for EX4300 Switch Configurations (continued)

Switch Configuration	Number of Power Supplies	Total Power (in watts)	Usable System Power (in watts)	Backup Power (in watts)	Base Power (in watts)
48-port EX4300 switch	1	550	550	0	175
	2	1100	1045	0	175

N+N Redundancy Configuration of DC Power Supplies

You can configure your switch for *N+N* redundancy, in which *N* power supplies can be removed or fail and the remaining *N* power supplies continue to supply power for the switch without interruption.

You can configure the power management software to manage switch power for *N+N* redundancy. When you configure power management for *N+N* redundancy, half of the total power available (*N*) is held as reserve power while the other half (*N*) is available for immediate consumption. If the switch configuration changes and requires additional power, then additional power is drawn from the reserve power, and the switch no longer has *N+N* power supply redundancy. This condition raises a minor alarm. If the condition is not corrected within 5 minutes, then a major alarm is issued.

For more information about how power management allocates power to chassis components when power is insufficient, see *Understanding Power Management on EX Series Switches*.

Depending on the power supplies installed in the switch, you can determine the system power budget.

- If one power supply is installed in the switch:
  - System power budget = Output wattage of the installed power supply (PSU(W))
  - Backup power available = 0 W

  A minor alarm is raised as switch has no *N+N* power supply redundancy.
- If two power supplies are installed in the switch:
  - System power budget = (Output wattage of one power supply) – (5% of the output wattage of one power supply)

    System power budget = PSU(W) – (0.05 x PSU(W))
  - Backup power available = (Output wattage of one power supply) – (5% of the output wattage of one power supply)

    System power budget = PSU(W) – (0.05 x PSU(W))

Table 53 on page 175 lists the *N+N* power calculation for EX4300 switches that use 550 W DC power supplies.

Copyright © 2018, Juniper Networks, Inc.

NOTE: The DC power supply in the switch does not support Power over Ethernet (PoE); you can use either an external power injector or an AC power supply to supply power to PoE devices that you connect to the switch. 32-port EX4300 switches does not support Power over Ethernet (PoE).

Table 53: N+N DC Power Calculations for EX4300 Switch Configurations

Switch Configuration	Number of Power Supplies	Total Power (in watts)	Usable System Power (in watts)	Backup Power (in watts)	Base Power (in watts)
24-port EX4300 switch	1	550	550	0	150
	2	1100	550	550	150
32-port EX4300 switch	1	550	550	0	149
	2	1100	550	550	160
48-port EX4300 switch	1	550	550	0	175
	2	1100	550	550	175

Related Documentation

- *Installing a DC Power Supply in an EX4300 Switch*

Connecting Earth Ground to an EX Series Switch

To ensure proper operation and to meet safety and electromagnetic interference (EMI) requirements, you must connect an EX Series switch to earth ground before you connect power to the switch. You must use the protective earthing terminal on the switch chassis to connect the switch to earth ground (see Figure 121 on page 182).

WARNING: The switch is installed in a restricted-access location. It has a separate protective earthing terminal on the chassis that must be permanently connected to earth ground to adequately ground the chassis and protect the operator from electrical hazards.

CAUTION: Before switch installation begins, ensure that a licensed electrician has attached an appropriate grounding lug to the grounding cable that you

supply. Using a grounding cable with an incorrectly attached lug can damage the switch.

- Parts and Tools Required for Connecting an EX Series Switch to Earth Ground on page 176
- Special Instructions to Follow Before Connecting Earth Ground to a Switch on page 180
- Connecting Earth Ground to an EX Series Switch on page 182

Parts and Tools Required for Connecting an EX Series Switch to Earth Ground

Table 54 on page 176 lists the earthing terminal location, grounding cable requirements, grounding lug specifications, screws and washers required, and the screwdriver needed for connecting a switch to earth ground. Before you begin connecting a switch to earth ground, ensure you have the parts and tools required for your switch.

Table 54: Parts and Tools Required for Connecting an EX Series Switch to Earth Ground

Switch	Earthing Terminal Location	Grounding Cable Requirements	Grounding Lug Specifications	Screws and Washers	Screwdriver	Additional Information
EX2200	Rear panel of the chassis	14 AWG (2 mm^2), minimum 90° C wire, or as permitted by the local code	Panduit LCC10-14BWL or equivalent—not provided	• Two 10-32 x .25 in. screws with #10 split-lock washer—not provided • Two #10 flat washers—not provided	Phillips (+) number 2	
EX2300-C	Rear panel of the chassis	14 AWG (2 mm^2), minimum 90° C wire, or as permitted by the local code	Panduit LCC10-14AW-L or equivalent—not provided	• Two 10-32 x .25 in. screws with #10 split-lock washer—not provided • Two #10 flat washers—not provided	Phillips (+) number 2	

Copyright © 2018, Juniper Networks, Inc.

Table 54: Parts and Tools Required for Connecting an EX Series Switch to Earth Ground (continued)

Switch	Earthing Terminal Location	Grounding Cable Requirements	Grounding Lug Specifications	Screws and Washers	Screwdriver	Additional Information

EX2300	Rear panel of the chassis	• EX2300 switches except EX2300-24MP and EX2300-48MP models—14 AWG (2 mm²), minimum 90° C wire, or as permitted by the local code
		• EX2300-24MP and EX2300-48MP models—14-10 AWG STR (2.5-6 mm²), 12-10 AWG SOL (4-6 mm²) minimum 90° C wire, or as permitted by the local code—not provided
			• EX2300 switches except EX2300-24MP and EX2300-48MP models—Panduit LCC10-14AW-L or equivalent— not provided
			• EX2300-24MP and EX2300-48MP models—Panduit LCA10-10L or equivalent— not provided
				• EX2300 switches except EX2300-24MP and EX2300-48MP models
				  • Two 10-32 x .25 in. screws with #10 split-lock washer— not provided
				  • Two #10 flat washers—not provided
				• EX2300-24MP and EX2300-48MP models
				  • One Pan Phillips M 4 x 6 mm Nickel plated screw—provided
					Phillips (+) number 2	

EX3200	Rear panel of the chassis	14 AWG (2 mm²), minimum 90° C wire, or as permitted by the local code	Panduit LCC10-14BWL or equivalent— not provided	• Two 10-32 x .25 in. screws with #10 split-lock washer— not provided • Two #10 flat washers— not provided	Phillips (+) number 2	See "Special Instructions to Follow Before Connecting Earth Ground to a Switch" on page 180.
EX3300	Rear panel of the chassis	14 AWG (2 mm²), minimum 90° C wire, or as permitted by the local code	Panduit LCC10-14BWL or equivalent— not provided	• Two 10-32 x .25 in. screws with #10 split-lock washer— not provided • Two #10 flat washers— not provided	Phillips (+) number 2	

Table 54: Parts and Tools Required for Connecting an EX Series Switch to Earth Ground (continued)

Switch	Earthing Terminal Location	Grounding Cable Requirements	Grounding Lug Specifications	Screws and Washers	Screwdriver	Additional Information
EX3400	Rear panel of the chassis	14 AWG (2 mm²), minimum 90° C wire, or as permitted by the local code	Panduit LCC10-14AW-L or equivalent—not provided	• Two 10-32 x .25 in. screws with #10 split-lock washer—not provided • Two #10 flat washers—not provided	Phillips (+) number 2	
EX4200	Left side of the chassis	14 WG (2 mm²), minimum 90° C wire, or as permitted by the local code	Panduit LCC10-14BWL or equivalent—not provided	• Two 10-32 x .25 in. screws with #10 split-lock washer—not provided • Two #10 flat washers—not provided	Phillips (+) number 2	See "Special Instructions to Follow Before Connecting Earth Ground to a Switch" on page 180.
EX4300	Left side of the chassis	14 AWG (2 mm²), minimum 90° C wire, or as permitted by the local code	Panduit LCC10-14BWL or equivalent—not provided	• Two 10-32 x .25 in. screws with #10 split-lock washer—not provided • Two #10 flat washers—not provided	Phillips (+) number 2	See "Special Instructions to Follow Before Connecting Earth Ground to a Switch" on page 180.
EX4500	Left side of the chassis	14 AWG (2 mm²), minimum 90° C wire, or as permitted by the local code	Panduit LCC10-14BWL or equivalent—not provided	• Two 10-32 x .25 in. screws with #10 split-lock washer—not provided • Two #10 flat washers—not provided	Phillips (+) number 2	See "Special Instructions to Follow Before Connecting Earth Ground to a Switch" on page 180.
EX4550	Left side of the chassis	14 AWG (2 mm²), minimum 90° C wire, or as permitted by the local code	Panduit LCC10-14BWL or equivalent—not provided	• Two 10-32 x .25 in. screws with #10 split-lock washer—not provided • Two #10 flat washers—not provided	Phillips (+) number 2	See "Special Instructions to Follow Before Connecting Earth Ground to a Switch" on page 180.

Copyright © 2018, Juniper Networks, Inc.

Table 54: Parts and Tools Required for Connecting an EX Series Switch to Earth Ground (continued)

Switch	Earthing Terminal Location	Grounding Cable Requirements	Grounding Lug Specifications	Screws and Washers	Screwdriver	Additional Information
EX6210	Rear panel of the chassis (on lower left side)	The grounding cable must be the same gage as the power feed cables and as permitted by the local code.	Panduit LCD2-14A-Q or equivalent —provided	• Two ¼-20 x 0.5 in. screws with #¼" split-washer —provided • Two #¼" flat washers—provided	Phillips (+) number 2	
EX8208	Left side of the chassis	6 AWG (13.3 mm²), minimum 60° C wire, or as permitted by the local code	Panduit LCD2-14A-Q or equivalent —provided	• Two ¼-20 x 0.5 in. screws with #¼" split-washer —provided • Two #¼" flat washers—provided	Phillips (+) number 2	
EX8216	Two earthing terminals: • Left side of the chassis • Rear panel of the chassis	2 AWG (33.6 mm²), minimum 60° C wire, or as permitted by the local code	Panduit LCD2-14A-Q or equivalent —provided	• Two ¼-20 x 0.5 in. screws with #¼" split-washer —provided • Two #¼" flat washers—provided	Phillips (+) number 2	See "Special Instructions to Follow Before Connecting Earth Ground to a Switch" on page 180.
EX9204	Rear panel of the chassis	One 6 AWG (13.3 mm²), minimum 60° C wire, or one that complies with the local code	Thomas&Betts LCN6-14 or equivalent—provided	• Two ¼-20 x 0.5 in. screws with #¼" split-washer—provided • Two #¼" flat washers—provided	Phillips (+) number 2	See *Grounding Cable and Lug Specifications for EX9200 Switches.*
EX9208	Rear panel of the chassis	One 6 AWG (13.3 mm²), minimum 60° C wire, or one that complies with the local code	Thomas&Betts LCN6-14 or equivalent—provided	• Two ¼-20 x 0.5 in. screws with #¼" split-washer—provided • Two #¼" flat washers—provided	Phillips (+) number 2	See *Grounding Cable and Lug Specifications for EX9200 Switches.*

Copyright © 2018, Juniper Networks, Inc.

Table 54: Parts and Tools Required for Connecting an EX Series Switch to Earth Ground (continued)

Switch	Earthing Terminal Location	Grounding Cable Requirements	Grounding Lug Specifications	Screws and Washers	Screwdriver	Additional Information
EX9214	Rear panel of the chassis	One 6 AWG (13.3 mm²), minimum 60° C wire, or one that complies with the local code	Thomas&Betts LCN6-14 or equivalent—provided	• Two ¼-20 x 0.5 in. screws with #¼" split-washer—provided • Two #¼" flat washers—provided	Phillips (+) number 2	See *Grounding Cable and Lug Specifications for EX9200 Switches*.
EX9251	Rear panel of the chassis	12 AWG (2.5 mm²), minimum 60° C wire, or one that complies with the local code—not provided	Panduit LCD10-10A-L or equivalent—not provided	Two 10-32 screws—provided	Phillips (+) number 2	*Grounding Cable and Lug Specifications for EX9251 Switches*

Special Instructions to Follow Before Connecting Earth Ground to a Switch

Table 55 on page 180 lists the special instructions that you might need to follow before connecting earth ground to a switch.

Table 55: Special Instructions to Follow Before Connecting Earth Ground to a Switch

Switch	Special Instructions
EX3200	NOTE: Some early variants of EX3200 switches for which the Juniper Networks model number on the label next to the protective earthing terminal is from 750-021*xxx* through 750-030*xxx* require 10-24x.25 in. screws.

Copyright © 2018, Juniper Networks, Inc.

Table 55: Special Instructions to Follow Before Connecting Earth Ground to a Switch (continued)

Switch	Special Instructions
EX4200	NOTE: Some early variants of EX4200 switches for which the Juniper Networks model number on the label next to the protective earthing terminal is from 750-021*xxx* through 750-030*xxx* require 10-24x.25 in. screws. NOTE: The protective earthing terminal on an EX4200 switch mounted on four posts of a rack is accessible through the slot on the left rear bracket only if the rack is 27.5 in. (69.85 cm) through 30.5 in. (77.47 cm) deep for a switch mounted flush with the rack front and 29.5 in. (74.93 cm) through 32.5 in. (82.55 cm) deep for a switch mounted 2 in. (5.08 cm) recessed from the rack front. See Figure 120 on page 181. *Figure 120: Connecting the Grounding Lug to a Switch Mounted on Four Posts of a Rack* 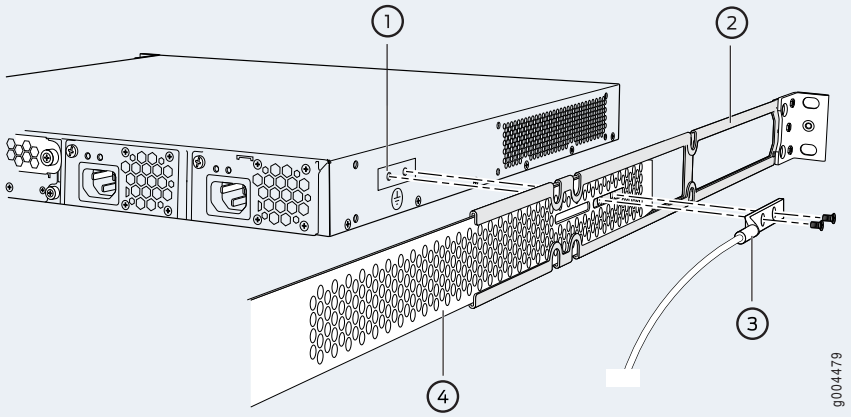 1— Protective earthing terminal; 3—Grounding lug 2—Side mounting-rail; 4—Rear mounting-blade NOTE: The brackets must be attached to the chassis before the grounding lug is attached. (The brackets are shown pulled away from the chassis so that the protective earthing terminal is seen.)
EX4300	NOTE: The protective earthing terminal on an EX4300 switch mounted on four posts of a rack is accessible through the slot on the left rear bracket only if the rack is 27.5 in. (69.85 cm) through 30.5 in. (77.47 cm) deep for a switch mounted flush with the rack front and 29.5 in. (74.93 cm) through 32.5 in. (82.55 cm) deep for a switch mounted 2 in. (5.08 cm) recessed from the rack front.
EX4500	NOTE: If you plan to mount your switch on four posts of a rack or cabinet, mount your switch in the rack or cabinet before attaching the grounding lug to the switch. See *Mounting an EX4500 Switch on Four Posts in a Rack or Cabinet*. NOTE: The protective earthing terminal on an EX4500 switch mounted on four posts of a rack is accessible through the slot on the left rear bracket only if the rack is 27.5 in. (69.85 cm) through 30.5 in. (77.47 cm) deep for a switch mounted flush with the rack front and 29.5 in. (74.93 cm) through 32.5 in. (82.55 cm) deep for a switch mounted 2 in. (5.08 cm) recessed from the rack front.
EX4550	NOTE: The protective earthing terminal on an EX4550 switch mounted on four posts of a rack is accessible through the slot on the left rear bracket only if the rack is 27.5 in. (69.85 cm) through 30.5 in. (77.47 cm) deep for a switch mounted flush with the rack front and 29.5 in. (74.93 cm) through 32.5 in. (82.55 cm) deep for a switch mounted 2 in. (5.08 cm) recessed from the rack front.
EX8216	NOTE: Only one of the two protective earthing terminals needs to be permanently connected to earth ground.

Copyright © 2018, Juniper Networks, Inc.

Connecting Earth Ground to an EX Series Switch

To connect earth ground to a switch:

1. Connect one end of the grounding cable to a proper earth ground, such as the rack in which the switch is mounted.

2. Place the grounding lug attached to the grounding cable over the protective earthing terminal. See Figure 121 on page 182.

Figure 121: Connecting a Grounding Cable to an EX Series Switch

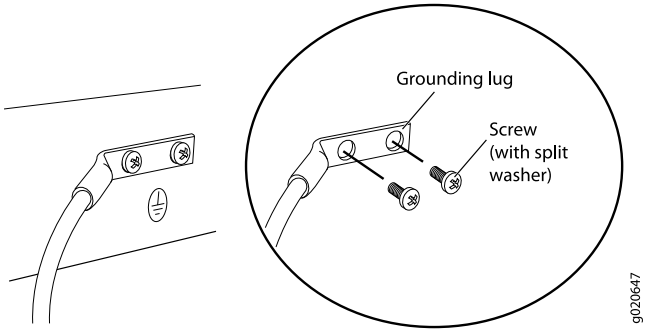

3. Secure the grounding lug to the protective earthing terminal with the washers and screws.

4. Dress the grounding cable and ensure that it does not touch or block access to other switch components.

WARNING: **Ensure that the cable does not drape where people could trip over it.**

Related Documentation

- General Safety Guidelines and Warnings on page 329
- Grounded Equipment Warning on page 347

Copyright © 2018, Juniper Networks, Inc.

CHAPTER 8

EX4200 Overview

- EX4200 Switches Hardware Overview on page 183
- Field-Replaceable Units in EX4200 Switches on page 185
- Chassis Physical Specifications for EX4200 Switches on page 186
- Cooling System and Airflow in an EX4200 Switch on page 187
- Power Supply in EX4200 Switches on page 188
- Connecting Earth Ground to an EX Series Switch on page 193

EX4200 Switches Hardware Overview

Juniper Networks EX Series Ethernet Switches provide scalable connectivity for the enterprise market, including branch offices, campus locations, and data centers. The switches run the Juniper Networks Junos operating system (Junos OS), which provides Layer 2 and Layer 3 switching, routing, and security services. The same Junos OS code base that runs on EX Series switches also runs on all Juniper Networks M Series, MX Series, and T Series routers and SRX Series devices.

- EX4200 Switches on page 183
- Uplink Modules on page 184
- Power over Ethernet Ports on page 184

EX4200 Switches

Juniper Networks EX4200 Ethernet Switches provide connectivity for medium- and high-density environments and scalability for growing networks. These switches can be deployed wherever you need high density of Gigabit Ethernet ports (24 to 480 ports) or redundancy. Typically, EX4200 switches are used in large branch offices, campus wiring closets, and data centers where they can be positioned as the top device in a rack to provide connectivity for all the devices in the rack.

You can connect individual EX4200 switches together to form one unit and manage the unit as a single chassis, called a *Virtual Chassis*. You can add more member switches to the Virtual Chassis as needed, up to a total of 10 members.

EX4200 switches are available in models with 24 or 48 ports with either all ports equipped for Power over Ethernet (PoE/PoE+) or only 8 ports equipped for PoE. All models provide ports that have 10/100/1000Base-T Gigabit Ethernet connectors and optional 1-gigabit

Copyright © 2018, Juniper Networks, Inc.

small form-factor pluggable (SFP) transceivers, 10-gigabit small form-factor pluggable (SFP+) transceivers, or 10-gigabit small form-factor pluggable (XFP) transceivers for use with fiber connections.

Additionally, a 24-port model provides 100Base-FX/1000Base-X SFP ports. This model is typically used as a small distribution switch.

All EX4200 switches have dedicated 64-Gbps Virtual Chassis ports (VCPs) that enable you to connect the switches to each other. You can also use optional uplink module ports to connect members of a Virtual Chassis across multiple wiring closets.

To provide carrier-class reliability, EX4200 switches include:

- Dual redundant power supplies that are field-replaceable and hot-swappable. An optional additional connection to an external power source is also available.
- A field-replaceable fan tray with three fans. The switch remains operational if a single fan fails.
- Redundant Routing Engines in a Virtual Chassis configuration. This redundancy enables graceful Routing Engine switchover (GRES) and nonstop active routing (NSR).
- Junos OS with its modular design that enables failed system processes to gracefully restart.

EX4200 switches have these features:

- Run under Junos OS for EX Series switches
- Have options of 24-port and 48-port models
- Have options of full (all ports) PoE/PoE+ capability or partial (8 ports) PoE capability
- Have optional uplink modules that provide connection to distribution switches

Uplink Modules

Optional uplink modules are available for all EX4200 switches. Uplink modules provide two ports for installing 10-gigabit small form-factor pluggable (XFP) transceivers, four ports for installing 1-gigabit small form-factor pluggable (SFP) transceivers, two ports for installing 10-gigabit small form-factor pluggable (SFP+) transceivers. You can use XFP, SFP, or SFP+ ports to connect an access switch to a distribution switch or to interconnect member switches of a Virtual Chassis across multiple wiring closets.

EX4200 switches also support an SFP+ Media Access Control Security (MACsec) uplink module starting in Junos OS Release 13.2X50-D10. The SFP+ MACsec module provides four MACsec-capable ports and can be configured to support up to four 1-gigabit SFP transceivers or up to two 10-gigabit small form-factor pluggable (SFP+) transceivers.

Power over Ethernet Ports

PoE ports provide electrical current to devices through the network cables so that separate power cords for devices such as IP phones, wireless access points, and security cameras are unnecessary.

 Copyright © 2018, Juniper Networks, Inc.

PoE was first defined in the IEEE 802.3af standard. Starting with Junos OS Release 11.1, EX4200 switches support enhanced PoE, a Juniper Networks extension to the IEEE 302.3af PoE standard that increases the amount of power per PoE port. A later standard, IEEE 802.3at, defined PoE+. An IEEE 802.3af powered device operates normally when connected to an IEEE 802.3at (PoE+) power sourcing equipment.

EX4200 switches with an AC power supply installed have options of full (all 24 or 48 ports) PoE/PoE+ capability or partial (8 ports) PoE capability. EX4200 switches with a DC power supply installed do not provide PoE. For more information, see *EX4200 Switch Models*.

Full PoE/PoE+ models are primarily used in IP telephony environments. Partial PoE models are used in environments where, for example, only a few ports for wireless access points or security cameras are required.

Related Documentation

- *EX4200 Switch Models*
- Field-Replaceable Units in EX4200 Switches on page 185
- Site Preparation Checklist for EX4200 Switches on page 216
- *Understanding PoE on EX Series Switches*

Field-Replaceable Units in EX4200 Switches

Field-replaceable units (FRUs) are components that you can replace at your site. The FRUs in the switch are:

- Power supply
- Fan tray
- Uplink module
- Transceivers

NOTE: **Uplink modules are not part of the standard package and must be ordered separately.**

The fan tray, uplink module, and transceivers are hot-removable and hot-insertable: You can remove and replace them without powering off the switch or disrupting switch functions.

NOTE: **If you have a Juniper J-Care service contract, register any addition, change, or upgrade of hardware components at** https://www.juniper.net/customers/support/tools/updateinstallbase/ **. Failure to do so can result in significant delays if you need replacement parts. This note does not apply if you replace existing components with the same type of component.**

Related Documentation

- Installing an Uplink Module in an EX4200 Switch on page 701
- Installing a Power Supply in an EX4200 Switch on page 697
- Removing a Power Supply from an EX4200 Switch on page 695
- Installing a Fan Tray in an EX4200 Switch on page 705
- Removing a Fan Tray from an EX4200 Switch on page 703
- Installing an Uplink Module in an EX4200 Switch on page 701
- Removing an Uplink Module from an EX4200 Switch on page 699
- *Installing a Transceiver*
- *Removing a Transceiver*

Chassis Physical Specifications for EX4200 Switches

The EX4200 switch chassis is a rigid sheet-metal structure that houses the hardware components. Table 56 on page 186 summarizes the physical specifications of the EX4200 switch chassis.

Table 56: Physical Specifications of the Switch Chassis

Description	Value
Chassis height	1.75 in. (4.45 cm)
Chassis width	• 17.25 in. (43.82 cm) • 19 in. (48.2 cm) with mounting brackets attached

Chassis depth	• Without power supply installed—17 in. (43.18 cm)
	• With power supply installed:
	  ◦ 320 W AC power supply or 190 W DC power supply installed—17 in. (43.18 cm)
	  ◦ 600 W or 930 W AC power supply installed—19.25 in. (48.9 cm)

Weight	• 320 W AC power supply: 2.5 lb (1.1 kg) • 600 W and 930 W AC power supplies: 3.1 lb (1.4 kg) • 190 W DC power supply: 2.5 lb (1.1 kg)

NOTE: **The weight of an EX4200 switch with one power supply installed is between 16–18 lb (7.2–8.2 kg).**

Related Documentation

- *Rack Requirements*
- *Cabinet Requirements*
- *Mounting an EX4200 Switch*
- Installing and Connecting an EX4200 Switch on page 491

Copyright © 2018, Juniper Networks, Inc.

- *Installing and Removing EX4200 Switch Hardware Components*

Cooling System and Airflow in an EX4200 Switch

The cooling system in an EX4200 switch consists of a field-replaceable unit (FRU) fan tray with three fans (see Figure 122 on page 187). All the EX4200 switch models, except the EX4200-24F-S and EX4200-48T-S switches are shipped with one fan tray pre-installed in the rear panel of the switches. EX4200-24F-S and EX4200-48T-S switches are not shipped with pre-installed fan tray; you must order them separately.

- Fan Tray on page 187
- Airflow Direction in the EX4200 Switch Chassis on page 187

Fan Tray

The fan tray is located at the rear of the chassis.

Figure 122: Fan Tray Used in an EX4200 Switch

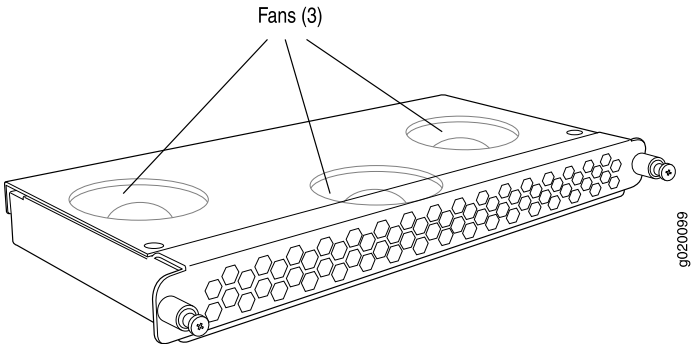

Airflow Direction in the EX4200 Switch Chassis

The fan tray located at the rear of the chassis provides side-to-rear chassis cooling (see Figure 123 on page 188).

Figure 123: Airflow Through the EX4200 Switch Chassis

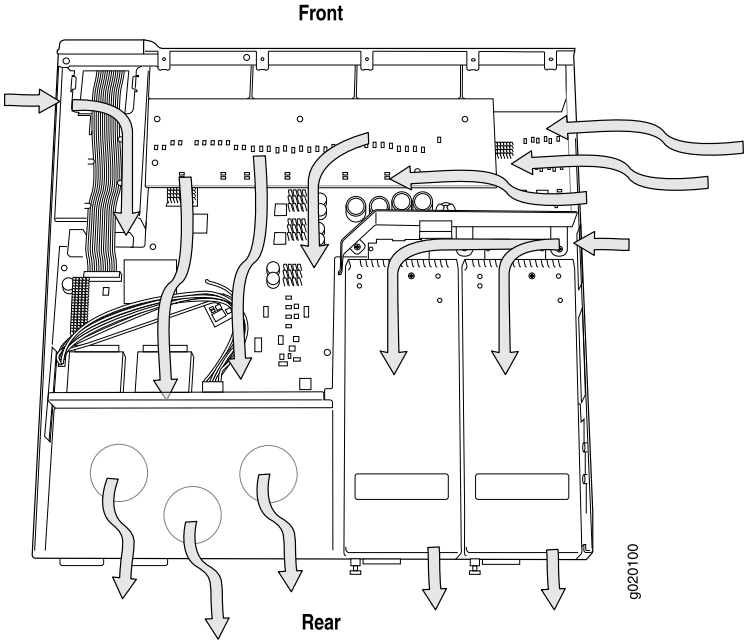

The fan tray used in an EX4200 switch comes with load-sharing redundancy that can tolerate a single fan failure at room temperature (below 45º C/113º F) to still provide sufficient cooling.

Temperature sensors in the chassis monitor the temperature within the chassis. The system raises an alarm if the fan fails or if the temperature inside the chassis rises above permitted levels. If the temperature inside the chassis rises above the threshold, the system shuts down automatically and the temperature shutdown LED on the rear panel is lit. You can see the status of fans and the temperature from the **Show Environment Status** option in the Status menu in the LCD panel.

Related Documentation

- Field-Replaceable Units in EX4200 Switches on page 185
- *Rear Panel of an EX4200 Switch*
- Prevention of Electrostatic Discharge Damage on page 360
- Installing a Fan Tray in an EX4200 Switch on page 705
- Removing a Fan Tray from an EX4200 Switch on page 703

Power Supply in EX4200 Switches

The power supply in EX4200 switches is a hot-removable and hot-insertable field-replaceable unit (FRU) that you can install on the rear panel without powering off the switch or disrupting the switching function. EX4200 switches have an internal redundant power supply, making the power supply in EX4200 switches fully redundant.

Copyright © 2018, Juniper Networks, Inc.

All the EX4200 switch models, except the EX4200-24F-S and EX4200-48T-S switches are shipped with one power supply pre-installed in the rear panel of the switches. EX4200-24F-S and EX4200-48T-S switches are not shipped with pre-installed power supplies; you must order them separately.

NOTE: This topic uses the term PoE to refer to both PoE and PoE+ unless there is a need to distinguish between the two.

EX4200 switches use power supplies that provides two DC output voltages: 12 V for system and logic power and 48–51 V (or higher, to compensate for voltage drops along the path from the power supplies to the RJ-45 connector) for PoE ports.

NOTE: After powering on the switch, wait for at least 60 seconds before powering it off. After powering off the switch, wait for at least 60 seconds before powering it back on.

After the switch has been powered on, it can take up to 60 seconds for status indicators—such as LEDs on the power supply, **show chassis** command output, and messages on the LCD panel—to indicate that the power supply is functioning normally. Ignore error indicators that might appear during the first 60 seconds.

NOTE: EX4200-24PX and EX4200-48PX switches do not support the 930 W (**EX-PWR-930-AC**) or the 600 W (**EX-PWR-600-AC**) AC power supplies that are used in the EX4200-48P and the EX4200-24P switch models. EX4200-24PX and EX4200-48PX switches work only with the power supplies labeled **EX-PWR2-930-AC** or **EX-PWR3-930-AC**. All EX4200 switches support **EX-PWR2-930-AC** and **EX-PWR3-930-AC** power supplies. You can find the label on the top of the power supply (see "Removing a Power Supply from an EX4200 Switch" on page 695).

- AC Power Supplies on page 189
- DC Power Supplies on page 190
- PoE Power Budget and AC Power Supplies on page 191

AC Power Supplies

All the EX4200 switches that are powered by AC power supplies except the EX4200-24F-S and EX4200-48T-S switches are shipped with one AC power supply pre-installed in the rear panel of the switches. EX4200-24F-S and EX4200-48T-S switches are not shipped with pre-installed power supplies; you must order them separately.

The AC power supply for the switch is available in 320 W, 600 W, and 930 W models (see Figure 124 on page 190 and Figure 125 on page 190). The exterior of the 600 W model

is identical in appearance to that of the 930 W model. The 320 W power supply is flush with the chassis. The 600 W power supply and 930 W power supply extend out of the chassis by 2.25 in. The power cord retainer clips extend out of the power supply by 3 in. The number of ports on which PoE is enabled determines the minimum power requirements of different switch models.

Figure 124: 320 W AC Power Supply

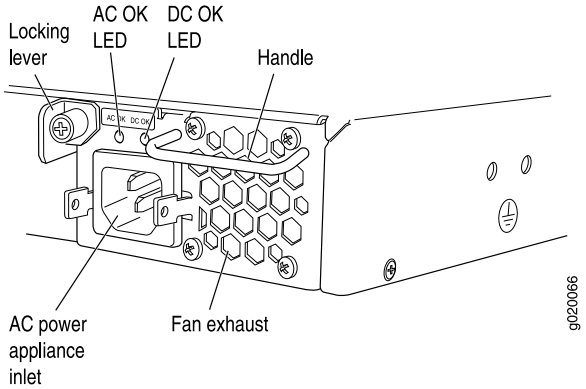

Figure 125: 600 W and 930 W AC Power Supplies

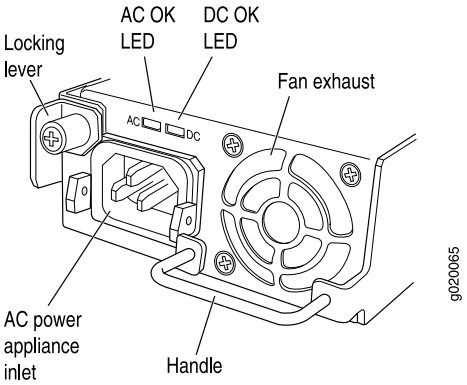

To avoid electrical injury, follow instructions in *Installing a Power Supply in an EX3200 Switch* and *Removing a Power Supply from an EX3200 Switch* or "Installing a Power Supply in an EX4200 Switch" on page 697 or "Removing a Power Supply from an EX4200 Switch" on page 695 carefully.

DC Power Supplies

All the EX4200 switches that are powered by DC power supplies except the EX4200-24F-S and EX4200-48T-S switches are shipped with one DC power supply pre-installed in the rear panel of the switches. EX4200-24F-S and EX4200-48T-S switches are not shipped with pre-installed power supplies; you must order them separately.

The DC power supply for the switch is available in a 190 W model, with dual input feeds for power resiliency (see Figure 126 on page 191).

Copyright © 2018, Juniper Networks, Inc.

NOTE: The DC power supply in the switch does not support Power over Ethernet (PoE); you can use either an external power injector or an AC power supply to supply power to PoE devices that you connect to the switch.

NOTE: The DC power supply in the switch has four terminals labeled A+, B+, A–, and B– (see Figure 126 on page 191) for connecting DC power source cables labeled positive (+) and negative (–). The DC power supplies are shipped with jumpers from A+ input to B+ input tied together and jumpers from A– input to B– input tied together.

NOTE: The A+ and B+ terminals are referred to as +RTN and A– and B– terminals are referred to as –48 V in "DC Power Wiring Sequence Warning" on page 367 and "DC Power Electrical Safety Guidelines" on page 364.

Figure 126: DC Power Supply

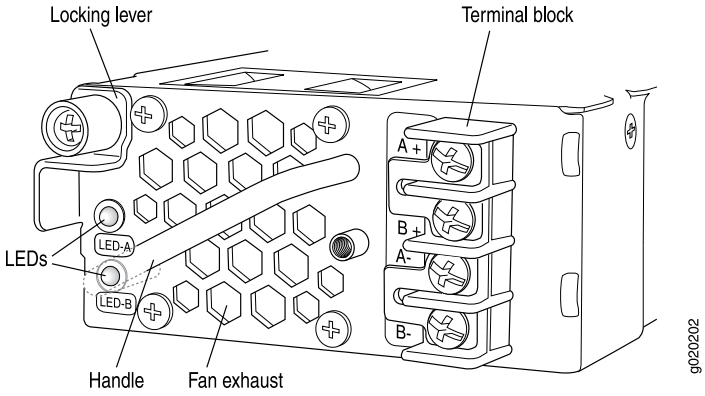

To avoid electrical injury, follow instructions in *Installing a Power Supply in an EX3200 Switch* and *Removing a Power Supply from an EX3200 Switch* or "Installing a Power Supply in an EX4200 Switch" on page 697 or "Removing a Power Supply from an EX4200 Switch" on page 695 carefully.

PoE Power Budget and AC Power Supplies

The PoE power budget for a PoE switch model is determined by the capacity of its power supply. For EX4200 switches, the capacity of the power supply provided with a PoE model is sufficient to supply each PoE-capable port with up to 15.4 W in compliance with the IEEE 802.3af PoE standard. Table 57 on page 192 lists the power supply ratings, and the associated PoE power budgets for EX4200 switch models that support PoE.

Starting with Junos OS Release 11.1, EX4200 switches support enhanced PoE, a Juniper Networks extension to the IEEE 802.3af PoE standard. Enhanced PoE permits up to 18.6 W per PoE port. Because the power supply provided with a switch is designed to supply a maximum of 15.4 W per PoE port, if you connect a powered device that draws more

than 15.4 W, the PoE power budget might not be sufficient to supply a full 15.4 W to the remaining PoE ports.

NOTE: **Switches upgraded to Junos OS Release 11.1 from a previous release require a separate upgrade of the PoE controller software to enable enhanced PoE support.**

EX4200-24PX and EX4200-48PX switches support PoE+, the IEEE 802.3at PoE standard, and permit up to 30 W per port.

Table 57: Power Supply Rating and PoE Power Budget for EX4200 Switch Models

Switch Model Number	Number of PoE-enabled Ports	Power Supply Rating	PoE Power Budget
EX4200-24T	8	320 W	130 W
EX4200-48T	8	320 W	130 W
EX4200-48T-S	8	320 W	130 W
EX4200-24P	24	600 W	410 W
EX4200-48P	48	930 W	740 W
EX4200-24PX	24	930 W	740 W
EX4200-48PX	48	930 W	740 W

Related Documentation

- AC Power Cord Specifications for EX4200 Switches on page 312
- AC Power Supply LEDs in EX4200 Switches on page 813
- DC Power Supply LEDs in EX4200 Switches on page 814
- *Rear Panel of an EX4200 Switch*
- Field-Replaceable Units in EX4200 Switches on page 185
- Power Specifications for EX4200 Switches on page 311
- Prevention of Electrostatic Discharge Damage on page 360
- *Connecting AC Power to an EX4200 Switch*
- *Connecting DC Power to an EX4200 Switch*
- Connecting Earth Ground to an EX Series Switch on page 175

Copyright © 2018, Juniper Networks, Inc.

Connecting Earth Ground to an EX Series Switch

To ensure proper operation and to meet safety and electromagnetic interference (EMI) requirements, you must connect an EX Series switch to earth ground before you connect power to the switch. You must use the protective earthing terminal on the switch chassis to connect the switch to earth ground (see Figure 121 on page 182).

WARNING: **The switch is installed in a restricted-access location. It has a separate protective earthing terminal on the chassis that must be permanently connected to earth ground to adequately ground the chassis and protect the operator from electrical hazards.**

CAUTION: **Before switch installation begins, ensure that a licensed electrician has attached an appropriate grounding lug to the grounding cable that you supply. Using a grounding cable with an incorrectly attached lug can damage the switch.**

- Parts and Tools Required for Connecting an EX Series Switch to Earth Ground on page 193
- Special Instructions to Follow Before Connecting Earth Ground to a Switch on page 197
- Connecting Earth Ground to an EX Series Switch on page 199

Parts and Tools Required for Connecting an EX Series Switch to Earth Ground

Table 54 on page 176 lists the earthing terminal location, grounding cable requirements, grounding lug specifications, screws and washers required, and the screwdriver needed for connecting a switch to earth ground. Before you begin connecting a switch to earth ground, ensure you have the parts and tools required for your switch.

Table 58: Parts and Tools Required for Connecting an EX Series Switch to Earth Ground

Switch	Earthing Terminal Location	Grounding Cable Requirements	Grounding Lug Specifications	Screws and Washers	Screwdriver	Additional Information
EX2200	Rear panel of the chassis	14 AWG (2 mm^2), minimum 90° C wire, or as permitted by the local code	Panduit LCC10-14BWL or equivalent—not provided	• Two 10-32 x .25 in. screws with #10 split-lock washer—not provided • Two #10 flat washers—not provided	Phillips (+) number 2	

Table 58: Parts and Tools Required for Connecting an EX Series Switch to Earth Ground (continued)

Switch	Earthing Terminal Location	Grounding Cable Requirements	Grounding Lug Specifications	Screws and Washers	Screwdriver	Additional Information
EX2300-C	Rear panel of the chassis	14 AWG (2 mm²), minimum 90° C wire, or as permitted by the local code	Panduit LCC10-14AW-L or equivalent— not provided	• Two 10-32 x .25 in. screws with #10 split-lock washer— not provided • Two #10 flat washers—not provided	Phillips (+) number 2	

EX2300	Rear panel of the chassis	• EX2300 switches except EX2300-24MP and EX2300-48MP models—14 AWG (2 mm²), minimum 90° C wire, or as permitted by the local code
		• EX2300-24MP and EX2300-48MP models—14-10 AWG STR (2.5-6 mm²), 12-10 AWG SOL (4-6 mm²) minimum 90° C wire, or as permitted by the local code—not provided
			• EX2300 switches except EX2300-24MP and EX2300-48MP models—Panduit LCC10-14AW-L or equivalent— not provided
			• EX2300-24MP and EX2300-48MP models—Panduit LCA10-10L or equivalent— not provided
				• EX2300 switches except EX2300-24MP and EX2300-48MP models
				  ◦ Two 10-32 x .25 in. screws with #10 split-lock washer— not provided
				  ◦ Two #10 flat washers—not provided
				• EX2300-24MP and EX2300-48MP models
				  ◦ One Pan Phillips M 4 x 6 mm Nickel plated screw—provided
					Phillips (+) number 2	

EX3200	Rear panel of the chassis	14 AWG (2 mm²), minimum 90° C wire, or as permitted by the local code	Panduit LCC10-14BWL or equivalent— not provided	• Two 10-32 x .25 in. screws with #10 split-lock washer— not provided • Two #10 flat washers— not provided	Phillips (+) number 2	See "Special Instructions to Follow Before Connecting Earth Ground to a Switch" on page 180.

Copyright © 2018, Juniper Networks, Inc.

Table 58: Parts and Tools Required for Connecting an EX Series Switch to Earth Ground (continued)

Switch	Earthing Terminal Location	Grounding Cable Requirements	Grounding Lug Specifications	Screws and Washers	Screwdriver	Additional Information
EX3300	Rear panel of the chassis	14 AWG (2 mm²), minimum 90° C wire, or as permitted by the local code	Panduit LCC10-14BWL or equivalent—not provided	• Two 10-32 x .25 in. screws with #10 split-lock washer—not provided • Two #10 flat washers—not provided	Phillips (+) number 2	
EX3400	Rear panel of the chassis	14 AWG (2 mm²), minimum 90° C wire, or as permitted by the local code	Panduit LCC10-14AW-L or equivalent—not provided	• Two 10-32 x .25 in. screws with #10 split-lock washer—not provided • Two #10 flat washers—not provided	Phillips (+) number 2	
EX4200	Left side of the chassis	14 WG (2 mm²), minimum 90° C wire, or as permitted by the local code	Panduit LCC10-14BWL or equivalent—not provided	• Two 10-32 x .25 in. screws with #10 split-lock washer—not provided • Two #10 flat washers—not provided	Phillips (+) number 2	See "Special Instructions to Follow Before Connecting Earth Ground to a Switch" on page 180.
EX4300	Left side of the chassis	14 AWG (2 mm²), minimum 90° C wire, or as permitted by the local code	Panduit LCC10-14BWL or equivalent—not provided	• Two 10-32 x .25 in. screws with #10 split-lock washer—not provided • Two #10 flat washers—not provided	Phillips (+) number 2	See "Special Instructions to Follow Before Connecting Earth Ground to a Switch" on page 180.
EX4500	Left side of the chassis	14 AWG (2 mm²), minimum 90° C wire, or as permitted by the local code	Panduit LCC10-14BWL or equivalent—not provided	• Two 10-32 x .25 in. screws with #10 split-lock washer—not provided • Two #10 flat washers—not provided	Phillips (+) number 2	See "Special Instructions to Follow Before Connecting Earth Ground to a Switch" on page 180.

Copyright © 2018, Juniper Networks, Inc.

Table 58: Parts and Tools Required for Connecting an EX Series Switch to Earth Ground (continued)

Switch	Earthing Terminal Location	Grounding Cable Requirements	Grounding Lug Specifications	Screws and Washers	Screwdriver	Additional Information
EX4550	Left side of the chassis	14 AWG (2 mm²), minimum 90° C wire, or as permitted by the local code	Panduit LCC10-14BWL or equivalent—not provided	• Two 10-32 x .25 in. screws with #10 split-lock washer—not provided • Two #10 flat washers—not provided	Phillips (+) number 2	See "Special Instructions to Follow Before Connecting Earth Ground to a Switch" on page 180.
EX6210	Rear panel of the chassis (on lower left side)	The grounding cable must be the same gage as the power feed cables and as permitted by the local code.	Panduit LCD2-14A-Q or equivalent —provided	• Two ¼-20 x 0.5 in. screws with #¼" split-washer —provided • Two #¼" flat washers—provided	Phillips (+) number 2	
EX8208	Left side of the chassis	6 AWG (13.3 mm²), minimum 60° C wire, or as permitted by the local code	Panduit LCD2-14A-Q or equivalent —provided	• Two ¼-20 x 0.5 in. screws with #¼" split-washer —provided • Two #¼" flat washers—provided	Phillips (+) number 2	
EX8216	Two earthing terminals: • Left side of the chassis • Rear panel of the chassis	2 AWG (33.6 mm²), minimum 60° C wire, or as permitted by the local code	Panduit LCD2-14A-Q or equivalent —provided	• Two ¼-20 x 0.5 in. screws with #¼" split-washer —provided • Two #¼" flat washers—provided	Phillips (+) number 2	See "Special Instructions to Follow Before Connecting Earth Ground to a Switch" on page 180.
EX9204	Rear panel of the chassis	One 6 AWG (13.3 mm²), minimum 60° C wire, or one that complies with the local code	Thomas&Betts LCN6-14 or equivalent—provided	• Two ¼-20 x 0.5 in. screws with #¼" split-washer—provided • Two #¼" flat washers—provided	Phillips (+) number 2	See *Grounding Cable and Lug Specifications for EX9200 Switches*.

Copyright © 2018, Juniper Networks, Inc.

Table 58: Parts and Tools Required for Connecting an EX Series Switch to Earth Ground (continued)

Switch	Earthing Terminal Location	Grounding Cable Requirements	Grounding Lug Specifications	Screws and Washers	Screwdriver	Additional Information
EX9208	Rear panel of the chassis	One 6 AWG (13.3 mm²), minimum 60° C wire, or one that complies with the local code	Thomas&Betts LCN6-14 or equivalent—provided	• Two ¼-20 x 0.5 in. screws with #¼" split-washer—provided • Two #¼" flat washers—provided	Phillips (+) number 2	See *Grounding Cable and Lug Specifications for EX9200 Switches*.
EX9214	Rear panel of the chassis	One 6 AWG (13.3 mm²), minimum 60° C wire, or one that complies with the local code	Thomas&Betts LCN6-14 or equivalent—provided	• Two ¼-20 x 0.5 in. screws with #¼" split-washer—provided • Two #¼" flat washers—provided	Phillips (+) number 2	See *Grounding Cable and Lug Specifications for EX9200 Switches*.
EX9251	Rear panel of the chassis	12 AWG (2.5 mm²), minimum 60° C wire, or one that complies with the local code—not provided	Panduit LCD10-10A-L or equivalent—not provided	Two 10-32 screws—provided	Phillips (+) number 2	*Grounding Cable and Lug Specifications for EX9251 Switches*

Special Instructions to Follow Before Connecting Earth Ground to a Switch

Table 55 on page 180 lists the special instructions that you might need to follow before connecting earth ground to a switch.

Table 59: Special Instructions to Follow Before Connecting Earth Ground to a Switch

Switch	Special Instructions
EX3200	NOTE: Some early variants of EX3200 switches for which the Juniper Networks model number on the label next to the protective earthing terminal is from 750-021*xxx* through 750-030*xxx* require 10-24x.25 in. screws.

Table 59: Special Instructions to Follow Before Connecting Earth Ground to a Switch (continued)

Switch	Special Instructions
EX4200	NOTE: Some early variants of EX4200 switches for which the Juniper Networks model number on the label next to the protective earthing terminal is from 750-021*xxx* through 750-030*xxx* require 10-24x.25 in. screws. NOTE: The protective earthing terminal on an EX4200 switch mounted on four posts of a rack is accessible through the slot on the left rear bracket only if the rack is 27.5 in. (69.85 cm) through 30.5 in. (77.47 cm) deep for a switch mounted flush with the rack front and 29.5 in. (74.93 cm) through 32.5 in. (82.55 cm) deep for a switch mounted 2 in. (5.08 cm) recessed from the rack front. See Figure 120 on page 181. *Figure 127: Connecting the Grounding Lug to a Switch Mounted on Four Posts of a Rack* 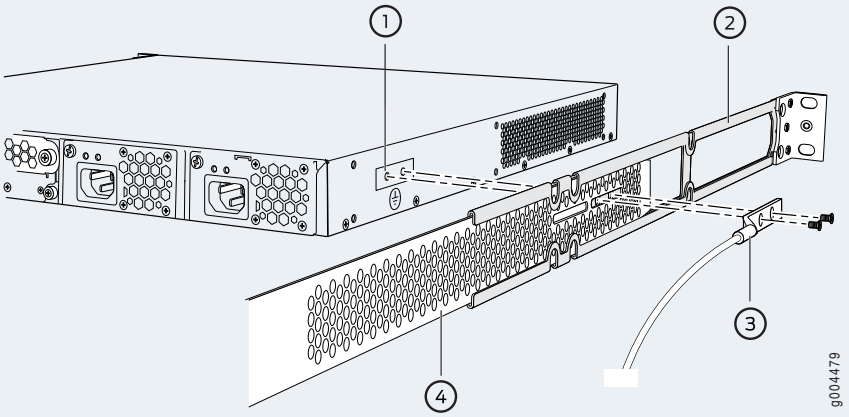 1— Protective earthing terminal; 3—Grounding lug 2—Side mounting-rail; 4—Rear mounting-blade NOTE: The brackets must be attached to the chassis before the grounding lug is attached. (The brackets are shown pulled away from the chassis so that the protective earthing terminal is seen.)
EX4300	NOTE: The protective earthing terminal on an EX4300 switch mounted on four posts of a rack is accessible through the slot on the left rear bracket only if the rack is 27.5 in. (69.85 cm) through 30.5 in. (77.47 cm) deep for a switch mounted flush with the rack front and 29.5 in. (74.93 cm) through 32.5 in. (82.55 cm) deep for a switch mounted 2 in. (5.08 cm) recessed from the rack front.
EX4500	NOTE: If you plan to mount your switch on four posts of a rack or cabinet, mount your switch in the rack or cabinet before attaching the grounding lug to the switch. See *Mounting an EX4500 Switch on Four Posts in a Rack or Cabinet*. NOTE: The protective earthing terminal on an EX4500 switch mounted on four posts of a rack is accessible through the slot on the left rear bracket only if the rack is 27.5 in. (69.85 cm) through 30.5 in. (77.47 cm) deep for a switch mounted flush with the rack front and 29.5 in. (74.93 cm) through 32.5 in. (82.55 cm) deep for a switch mounted 2 in. (5.08 cm) recessed from the rack front.
EX4550	NOTE: The protective earthing terminal on an EX4550 switch mounted on four posts of a rack is accessible through the slot on the left rear bracket only if the rack is 27.5 in. (69.85 cm) through 30.5 in. (77.47 cm) deep for a switch mounted flush with the rack front and 29.5 in. (74.93 cm) through 32.5 in. (82.55 cm) deep for a switch mounted 2 in. (5.08 cm) recessed from the rack front.
EX8216	NOTE: Only one of the two protective earthing terminals needs to be permanently connected to earth ground.

Copyright © 2018, Juniper Networks, Inc.

Connecting Earth Ground to an EX Series Switch

To connect earth ground to a switch:

1. Connect one end of the grounding cable to a proper earth ground, such as the rack in which the switch is mounted.

2. Place the grounding lug attached to the grounding cable over the protective earthing terminal. See Figure 121 on page 182.

Figure 128: Connecting a Grounding Cable to an EX Series Switch

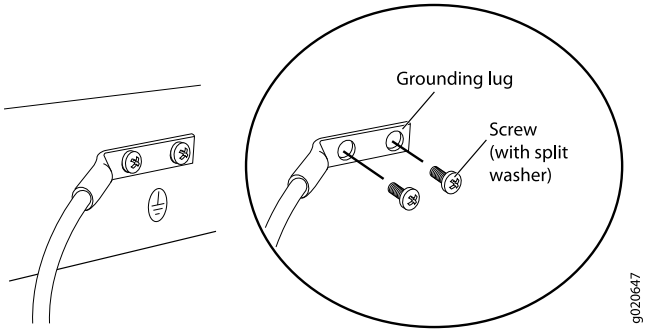

3. Secure the grounding lug to the protective earthing terminal with the washers and screws.

4. Dress the grounding cable and ensure that it does not touch or block access to other switch components.

WARNING: **Ensure that the cable does not drape where people could trip over it.**

Related Documentation

- General Safety Guidelines and Warnings on page 329
- Grounded Equipment Warning on page 347

Copyright © 2018, Juniper Networks, Inc.

PART 2

Planning

- Site Preparation on page 203
- Rack and Cabinet Requirements on page 229
- Port and Interface Specifications on page 257
- Cable Specifications on page 265
- Planning QFX3100 Power Requirements on page 277
- Planning QFX3008-I Power Requirements on page 281
- Planning QFX5100 Power Requirements on page 291
- Planning QFX3600 Power Requirements on page 295
- Planning QFX3500 Power Requirements on page 299
- Planning EX4300 Power Requirements on page 303
- Planning EX4200 Power Requirements on page 311
- Compliance on page 315

Copyright © 2018, Juniper Networks, Inc.

Copyright © 2018, Juniper Networks, Inc.

CHAPTER 9

Site Preparation

- Planning a QFX3000-G QFabric System Deployment on page 204
- Site Preparation Checklist for a QFX3100 Director Device on page 208
- Site Preparation Checklist for a QFX3008-I Interconnect Device on page 210
- Site Preparation Checklist for a QFX5100 Device on page 211
- Site Preparation Checklist for a QFX3600 or QFX3600-I Device on page 212
- Site Preparation Checklist for a QFX3500 Device on page 213
- Site Preparation Checklist for EX4300 Switches on page 215
- Site Preparation Checklist for EX4200 Switches on page 216
- General Site Guidelines on page 217
- Site Electrical Wiring Guidelines on page 218
- Environmental Requirements and Specifications for a QFX3100 Director Device on page 218
- Environmental Requirements and Specifications for a QFX3008-I Interconnect Device on page 219
- Environmental Requirements and Specifications for QFX3600 and QFX3600-I Devices on page 220
- Environmental Requirements and Specifications for a QFX3500 Device on page 221
- Environmental Requirements and Specifications for a QFX5100 Device on page 222
- Environmental Requirements and Specifications for EX Series Switches on page 223

Copyright © 2018, Juniper Networks, Inc.

Planning a QFX3000-G QFabric System Deployment

A QFX3000-G QFabric system is formed by interconnecting QFX3500, QFX3600, or QFX5100 Node devices, QFX3008-I Interconnect devices, and QFX3100 Director devices. Two Virtual Chassis, composed of four EX4200 or four EX4300 switches each, are used to interconnect the control plane and management network.

NOTE: **The EX4200 and EX4300 Virtual Chassis may not be intermixed in the same QFabric system.**

Before installing a QFabric system, you must consider the following factors:

- The number of devices in the QFabric system and their location.
  - You must have two QFX3100 Director devices operating in a Director group.
  - You can have up to four QFX3008-I Interconnect devices.
  - You can interconnect up to 128 QFX Series Switches as Node devices. Supported models are:
    - QFX5100-24Q
    - QFX5100-48S
    - QFX5100-48T
    - QFX3600
    - QFX3500
- The number of Node devices you require depends on the following factors:
  - The number of access ports you need for connections to either endpoint systems (such as servers and storage devices) or external networks.
  - The oversubscription ratio you need on the access ports.
  - The number of access ports supported on each Node device based on that oversubscription ratio.
  - The number of connections from a Node device to an interconnect device.

  Table 60 on page 205 shows the number of 10-Gigabit Ethernet access ports supported on Node devices based on the oversubscription ratio you need on the access ports.

Copyright © 2018, Juniper Networks, Inc.

Table 60: Number of 10-Gigabit Ethernet Access Ports Supported on Node Devices Based on Oversubscription Ratio

Oversubscription Ratio on Access Ports	Number of 10-Gigabit Ethernet Access Ports Supported on a QFX3500 Node Device	Number of 10-Gigabit Ethernet Access Ports Supported on a QFX3600 Node Device	Number of 10-Gigabit Ethernet Access Ports Supported on a QFX5100-24Q Node Device	Number of 10-Gigabit Ethernet Access Ports Supported on a QFX5100-48S and QFX5100-48T Node Device
1:1 (no oversubscription)	1:1 oversubscription is not supported	32	64	1:1 oversubscription is not supported
2:1	N/A	N/A	64	NA
3:1	48	48	80 ports with 2 QFX-EM-4Q expansion modules	3:1 oversubscription not supported
3.5:1	3.5:1 oversubscription is not supported	3.5:1 oversubscription is not supported	3.5:1 oversubscription not supported	56
4:1	N/A	N/A	64	N/A
6:1	48	56	96 ports with 2 QFX-EM-4Q expansion modules using 4 uplinks to the Interconnect device	6:1 oversubscription not supported

To calculate the required number of Node devices (N_n) for your QFabric system, divide the number of access ports you need for connections to either endpoint systems or external networks (N_p) by the number of access ports supported on each Node device (N_a) based on the required oversubscription ratio, and round up the resulting value. For example, if you need 300 10-Gigabit Ethernet access ports at 3:1 oversubscription, and your Node device supports 48 10-Gigabit Ethernet access ports at 3:1 oversubscription, you require 7 Node devices as shown below:

$N_n = N_p / N_a$

$N_n = 300/48$

$N_n = 6.25$ (rounded up to 7)

The number of Interconnect devices you require depends on the number of Node devices and the oversubscription ratio required on the access ports of the Node devices. See Table 61 on page 206 to determine the number of Interconnect devices you require. For example, if you plan to install 60 Node devices and require 3:1 oversubscription ratio on the Node devices, you must install 2 Interconnect devices.

Table 61: Maximum Number of Node Devices Supported Based on Oversubscription Ratio and Number of Interconnect Devices

Oversubscription Ratio	QFX Series Node Devices	Number of QFX3008-I Interconnect Devices	Maximum Number of Node Devices
1:1	QFX3600	2	32
		4	64
2:1	QFX5100-24Q	2	32
		4	64
3:1	• QFX3500 • QFX3600	2	64
		4	128
3.5:1	QFX5100-48S or QFX5100-48T	2	64
4:1	QFX5100-24Q	4	128 with 2 QFX-EM-4Q
		4	64
6:1	• QFX3600 • QFX3500 • QFX5100-24Q with 2 QFX-EM-4Q	• 2 • 2 • 2	• 128 • 128 • 64

For information about the size and strength of racks for the devices, see the following topics:

- Rack Requirements for a QFX3100 Director Device on page 230
- Rack Requirements for a QFX3008-I Interconnect Device on page 231
- Rack Requirements for a QFX5100 Device on page 232
- Rack Requirements for a QFX3600 or QFX3600-I Device on page 233
- Rack Requirements for a QFX3500 Device on page 235
- Rack Requirements for EX4200 Switches on page 237

For the dimensions and weights of the devices, see the following topics:

- Chassis Physical Specifications for a QFX3100 Director Device on page 29
- Chassis Physical Specifications for a QFX3008-I Interconnect Device on page 45
- Chassis Physical Specifications for a QFX5100 Device on page 76
- Chassis Physical Specifications for QFX3600 and QFX3600-I Devices on page 103
- Chassis Physical Specifications for a QFX3500 Chassis on page 121
- Chassis Physical Specifications for EX4200 Switches on page 186

 Copyright © 2018, Juniper Networks, Inc.

- Cabling requirements for the control plane and management network—The control plane and management network are interconnected using standard 1000BASE-T Ethernet over copper wiring. Each network segment can be a maximum length of 100 m (328 ft). See "Cable Specifications for Copper-Based Control Plane Connections for the QFabric System" on page 265.
- Cabling requirements for the data plane—The data plane is interconnected using standard 40GBASE-SR Ethernet QSFP+ optical transceivers over fiber-optic wiring. If you use OM3 optical fiber, each network segment can be a maximum of 100 m (328 ft). If you use OM4 optical fiber, each network segment can be a maximum of 150 m (492 ft). However, keep in mind that each network segment in the control plane and management network is limited to a maximum length of 100 m (328 ft). See "Determining Transceiver Support for QFabric Systems" on page 258.

  The data plane cabling requirements depend on the number of connections required from each Node device to Interconnect devices based on the oversubscription ratio you need on the access ports of the Node device. Table 62 on page 207 shows the number of connections required from each Node device to Interconnect devices based on the oversubscription ratio you need on the Node device.

Table 62: Number of Connections Required Between Node and Interconnect Devices Based on Oversubscription Ratio

Oversubscription Ratio	QFX Series Switch Model	Number of Connections from Each Node Device to Interconnect Devices
1:1	QFX3600	8
	QFX5100-24Q	16
3:1	• QFX3600 • QFX3500	4
3.5:1	• QFX5100-48S • QFX5100-48T	4
6:1	• QFX3600 • QFX3500	2
	QFX5100-24Q with 2 QFX-EM-4Q	4

- Power supply—You must plan the installation site to meet the power requirements of all the devices in the QFX3000-G QFabric system. For information on power requirements and configuration options for each device, see the following topics:
  - AC Power Specifications for a QFX3100 Director Device on page 277
  - AC Power Specifications for a QFX3008-I Interconnect Device with Single-Phase Wiring Trays on page 281
  - AC Power Specifications for a QFX3008-I Interconnect Device with Three-Phase Delta Wiring Trays on page 282

Copyright © 2018, Juniper Networks, Inc.

- AC Power Specifications for a QFX3008-I Interconnect Device with Three-Phase Wye Wiring Trays on page 282
- AC Power Specifications for a QFX3600 or QFX3600-I Device on page 295
- AC Power Specifications for a QFX3500 Device on page 299
- AC Power Specifications for a QFX5100 Device on page 291
- Power Specifications for EX4200 Switches on page 311

- For more information about the site preparation requirements for each device, see the following topics:
  - Site Preparation Checklist for a QFX3100 Director Device on page 208
  - Site Preparation Checklist for a QFX3008-I Interconnect Device on page 210
  - Site Preparation Checklist for a QFX3600 or QFX3600-I Device on page 212
  - Site Preparation Checklist for a QFX3500 Device on page 213
  - Site Preparation Checklist for a QFX5100 Device on page 211
  - Site Preparation Checklist for EX4200 Switches on page 216

Related Documentation

- QFX3000-G QFabric System Installation Overview on page 373
- Understanding QFX3000-G QFabric System Hardware Configurations on page 10
- Clearance Requirements for Airflow and Hardware Maintenance for a QFX3100 Director Device on page 245
- Clearance Requirements for Airflow and Hardware Maintenance for a QFX3008-I Interconnect Device on page 246
- Clearance Requirements for Airflow and Hardware Maintenance for a QFX5100 Device on page 248
- Clearance Requirements for Airflow and Hardware Maintenance for a QFX3600 or QFX3600-I Device on page 249
- Clearance Requirements for Airflow and Hardware Maintenance for a QFX3500 Device on page 250
- Clearance Requirements for Airflow and Hardware Maintenance for EX4200 Switches on page 254

Site Preparation Checklist for a QFX3100 Director Device

The checklist in Table 63 on page 209 summarizes the tasks you need to perform when preparing a site for a QFX3100 Director device installation.

Copyright © 2018, Juniper Networks, Inc.

Table 63: Site Preparation Checklist

Item or Task	For More Information	Performed By	Date
Environment			
Verify that environmental factors such as temperature and humidity do not exceed QFX3100 Director device tolerances.	"Environmental Requirements and Specifications for a QFX3100 Director Device" on page 218		
Power			
Measure the distance between external power sources and QFX3100 Director device installation site.			
Calculate power consumption and requirements.			
Hardware Configuration			
Choose the number and types of QFX3100 Director devices you want to install.	"QFX3100 Director Device Overview" on page 25		
Rack or Cabinet			
Verify that your rack or cabinet meets the minimum requirements for the installation of the QFX3100 Director device.	"Rack Requirements for a QFX3100 Director Device" on page 230		
Plan the rack or cabinet location, including required space clearances.	"Clearance Requirements for Airflow and Hardware Maintenance for a QFX3100 Director Device" on page 245		
Secure the rack or cabinet to the floor and building structure.			
Cables			
Acquire cables and connectors: • Determine the number of cables needed based on your planned configuration. • Review the maximum distance allowed for each cable. Choose the length of cable based on the distance between the hardware components being connected.			
Plan cable routing and management.			

Related Documentation

- General Safety Guidelines and Warnings on page 329
- General Site Guidelines on page 217
- Installing and Connecting a QFX3100 Director Device on page 377
- Mounting a QFX3100 Director Device on Four Posts in a Rack or Cabinet on page 381
- Mounting a QFX3100 Director Device on Two Posts in a Rack or Cabinet on page 380

Copyright © 2018, Juniper Networks, Inc.

Site Preparation Checklist for a QFX3008-I Interconnect Device

The checklist in Table 64 on page 210 summarizes the tasks you need to perform to prepare a site for installing a QFX3008-I Interconnect device.

Table 64: Site Preparation Checklist for a QFX3008-I Interconnect Device

Item or Task	For More Information	Performed By	Date
Environment			
Verify that environmental factors such as temperature and humidity do not exceed switch tolerances.	"Environmental Requirements and Specifications for a QFX3008-I Interconnect Device" on page 219		
Power			
Measure the distance between the external power sources and the chassis installation site.			
Calculate power consumption and requirements.	"AC Power Specifications for a QFX3008-I Interconnect Device with Single-Phase Wiring Trays" on page 281 "Power Requirements for a QFX3008-I Interconnect Device" on page 283 "Calculating Power Requirements for a QFX3008-I Interconnect Device" on page 288 "Calculating the Fiber-Optic Cable Power Budget for a QFX Series Device" on page 271 "Calculating the Fiber-Optic Cable Power Margin for a QFX Series Device" on page 272		
Rack or Cabinet			
Select the type of rack or cabinet and verify that it meets the minimum requirements for the installation of the switch.	"Rack Requirements for a QFX3008-I Interconnect Device" on page 231 "Cabinet Requirements for a QFX3008-I Interconnect Device" on page 239		
Plan rack or cabinet location, ensuring the required space clearances.	"Clearance Requirements for Airflow and Hardware Maintenance for a QFX3008-I Interconnect Device" on page 246		
Secure the rack or cabinet to the floor and building structure.	"Rack Requirements for a QFX3008-I Interconnect Device" on page 231 "Cabinet Requirements for a QFX3008-I Interconnect Device" on page 239		
Cables			

Copyright © 2018, Juniper Networks, Inc.

Table 64: Site Preparation Checklist for a QFX3008-I Interconnect Device (continued)

Item or Task	For More Information	Performed By	Date
Plan the cable routing and management. Acquire cables and connectors: • Determine the number of cables needed based on your planned configuration. • Ensure that the distance between hardware components to be connected allows for cable lengths to be within the specified maximum limits.			

Related Documentation

- General Safety Guidelines and Warnings on page 329
- Installing and Connecting a QFX3008-I Interconnect Device on page 389

Site Preparation Checklist for a QFX5100 Device

The checklist in Table 65 on page 211 summarizes the tasks you need to perform when preparing a site for QFX5100 deviceinstallation.

Table 65: Site Preparation Checklist

Item or Task	For More Information	Performed By	Date
Architecture			
Determine whether the QFX5100 device will operate: • standalone • as a member in a Virtual Chassis • as a spine or leaf in a Virtual Chassis Fabric (VCF) • as a node in a QFabric	• *Planning a Virtual Chassis Fabric Deployment* • Planning a QFX3000-G QFabric System Deployment on page 204 • *Planning a QFX3000-M QFabric System Deployment*		
Environment			
Verify that environmental factors such as temperature and humidity do not exceed switch tolerances.	"Environmental Requirements and Specifications for a QFX5100 Device" on page 222		
Power			
Measure the distance between external power sources and switch installation site.			
Calculate the power consumption and requirements.	"AC Power Specifications for a QFX5100 Device" on page 291		
Rack or Cabinet			

Table 65: Site Preparation Checklist (continued)

Item or Task	For More Information	Performed By	Date
Verify that your rack or cabinet meets the minimum requirements for the installation of the switch.	"Rack Requirements for a QFX5100 Device" on page 232 "Cabinet Requirements for a QFX5100 Device" on page 240		
Plan rack or cabinet location, including required space clearances.	"Clearance Requirements for Airflow and Hardware Maintenance for a QFX5100 Device" on page 248		
Secure the rack or cabinet to the floor and building structure.			
Cables			
Acquire cables and connectors: • Determine the number of cables needed based on your planned configuration. • Review the maximum distance allowed for each cable. Choose the length of cable based on the distance between the hardware components being connected.	• Port Panel of a QFX5100-24Q Device on page 81 • *Port Panel of a QFX5100-24Q-AA Device* • Port Panel of QFX5100-48S and QFX5100-48SH Devices on page 77 • Port Panel of QFX5100-48T and QFX5100-48TH Devices on page 79 • *Port Panel of a QFX5100-96S Device*		
Plan the cable routing and management.			

Related Documentation

- General Safety Guidelines and Warnings on page 329
- General Site Guidelines on page 217
- Installing and Connecting a QFX5100 Device on page 433
- Mounting a QFX5100 Device in a Rack or Cabinet on page 435

Site Preparation Checklist for a QFX3600 or QFX3600-I Device

The checklist in Table 65 on page 211 summarizes the tasks you need to perform when preparing a site for QFX3600 or QFX3600-I device installation.

Table 66: Site Preparation Checklist

Item or Task	For More Information	Performed By	Date
Environment			
Verify that environmental factors such as temperature and humidity do not exceed device tolerances.	"Environmental Requirements and Specifications for QFX3600 and QFX3600-I Devices" on page 220		

Copyright © 2018, Juniper Networks, Inc.

Table 66: Site Preparation Checklist (continued)

Item or Task	For More Information	Performed By	Date
Power			
Measure distance between external power sources and device installation site.			
Calculate the power consumption and requirements.	"AC Power Specifications for a QFX3600 or QFX3600-I Device" on page 295 "DC Power Specifications for a QFX3600 or QFX3600-I Device" on page 297		
Rack or Cabinet			
Verify that your rack or cabinet meets the minimum requirements for the installation of the switch.	"Rack Requirements for a QFX3600 or QFX3600-I Device" on page 233 "Cabinet Requirements for a QFX3600 or QFX3600-I Device" on page 241		
Plan rack or cabinet location, including required space clearances.	"Clearance Requirements for Airflow and Hardware Maintenance for a QFX3600 or QFX3600-I Device" on page 249		
Secure the rack or cabinet to the floor and building structure.			
Cables			
Acquire cables and connectors: • Determine the number of cables needed based on your planned configuration. • Review the maximum distance allowed for each cable. Choose the length of cable based on the distance between the hardware components being connected.	*Determining Interface Support for the QFX3600 Device* "Determining Transceiver Support for QFabric Systems" on page 258		
Plan the cable routing and management.			

Related Documentation

- General Safety Guidelines and Warnings on page 329
- General Site Guidelines on page 217
- Installing and Connecting a QFX3600 or QFX3600-I Device on page 453

Site Preparation Checklist for a QFX3500 Device

The checklist in Table 65 on page 211 summarizes the tasks you need to perform when preparing a site for QFX3500 device installation.

Table 67: Site Preparation Checklist

Item or Task	For More Information	Performed By	Date
Environment			
Verify that environmental factors such as temperature and humidity do not exceed device tolerances.	"Environmental Requirements and Specifications for a QFX3500 Device" on page 221		
Power			
Measure distance between external power sources and device installation site.			
Calculate the power consumption and requirements.	"AC Power Specifications for a QFX3500 Device" on page 299		
Rack or Cabinet			
Verify that your rack or cabinet meets the minimum requirements for the installation of the device.	"Rack Requirements for a QFX3500 Device" on page 235 "Cabinet Requirements for a QFX3500 Device" on page 242		
Plan rack or cabinet location, including required space clearances.	"Clearance Requirements for Airflow and Hardware Maintenance for a QFX3500 Device" on page 250		
Secure the rack or cabinet to the floor and building structure.			
Cables			
Acquire cables and connectors: • Determine the number of cables needed based on your planned configuration. • Review the maximum distance allowed for each cable. Choose the length of cable based on the distance between the hardware components being connected.	*Determining Interface Support for the QFX3500 Device* "Determining Transceiver Support for QFabric Systems" on page 258 "Cable Specifications for Console and Management Connections for the QFX Series" on page 268		
Plan the cable routing and management.			

Related Documentation

- General Safety Guidelines and Warnings on page 329
- General Site Guidelines on page 217
- Installing and Connecting a QFX3500 Device on page 473
- Mounting a QFX3500 Device in a Rack or Cabinet on page 475

Copyright © 2018, Juniper Networks, Inc.

Site Preparation Checklist for EX4300 Switches

The checklist in Table 65 on page 211 summarizes the tasks you need to perform when preparing a site for EX4300 switch installation.

Table 68: Site Preparation Checklist

Item or Task	For More Information	Performed by	Date
Environment			
Verify that environmental factors such as temperature and humidity do not exceed switch tolerances.	"Environmental Requirements and Specifications for EX Series Switches" on page 223		
Power			
Measure the distance between external power sources and the switch installation site.			
Locate sites for connection of system grounding.			
Calculate the power consumption and requirements.	• AC Power Supply Specifications for EX4300 Switches on page 303 • DC Power Supply Specifications for EX4300 Switches on page 309		
Hardware Configuration			
Choose the number and types of switches you want to install.	"EX4300 Switches Hardware Overview" on page 137		
Rack or Cabinet			
Verify that your rack or cabinet meets the minimum requirements for the installation of the switch.	• *Rack Requirements* • *Cabinet Requirements*		
Plan rack or cabinet location, including required space clearances.	"Clearance Requirements for Airflow and Hardware Maintenance for EX4300 Switches" on page 251		
Secure the rack or cabinet to the floor and building structure.			
Cables			
Acquire cables and connectors: • Determine the number of cables needed based on your planned configuration. • Review the maximum distance allowed for each cable. Choose the length of cable based on the distance between the hardware components being connected.			

Table 68: Site Preparation Checklist (continued)

Item or Task	For More Information	Performed by	Date
Plan the cable routing and management.			

Related Documentation

- General Safety Guidelines and Warnings on page 329
- *Mounting an EX4300 Switch*

Site Preparation Checklist for EX4200 Switches

The checklist in Table 65 on page 211 summarizes the tasks you need to perform when preparing a site for EX4200 switch installation.

Table 69: Site Preparation Checklist

Item or Task	For More Information	Performed by	Date
Environment			
Verify that environmental factors such as temperature and humidity do not exceed switch tolerances.	"Environmental Requirements and Specifications for EX Series Switches" on page 223		
Power			
Measure distance between external power sources and switch installation site.			
Locate sites for connection of system grounding.			
Calculate the power consumption and requirements.	"Power Specifications for EX4200 Switches" on page 311		
Hardware Configuration			
Choose the number and types of switches you want to install.	"EX4200 Switches Hardware Overview" on page 183		
Rack or Cabinet			
Verify that your rack or cabinet meets the minimum requirements for the installation of the switch.	*Rack Requirements* *Cabinet Requirements*		
Plan rack or cabinet location, including required space clearances.	"Clearance Requirements for Airflow and Hardware Maintenance for EX4200 Switches" on page 254		
Secure the rack or cabinet to the floor and building structure.			

Copyright © 2018, Juniper Networks, Inc.

Table 69: Site Preparation Checklist (continued)

Item or Task	For More Information	Performed by	Date
Wall			
Verify that the wall meets the minimum requirements for the installation of the switch.	*Requirements for Mounting an EX4200 Switch on a Desktop or Wall*		
Verify that there is appropriate clearance in your selected location.	"Clearance Requirements for Airflow and Hardware Maintenance for EX4200 Switches" on page 254		
Cables			
Acquire cables and connectors: • Determine the number of cables needed based on your planned configuration. • Review the maximum distance supported for each cable. Choose the length of cable based on the distance between the hardware components being connected.			
Plan the cable routing and management.			

Related Documentation

- General Safety Guidelines and Warnings on page 329
- General Site Guidelines on page 217
- Installing and Connecting an EX4200 Switch on page 491
- *Mounting an EX4200 Switch*

General Site Guidelines

Efficient device operation requires proper site planning and maintenance and proper layout of the equipment, rack or cabinet (if used), and wiring closet.

To plan and create an acceptable operating environment for your device and prevent environmentally caused equipment failures:

- Keep the area around the chassis free from dust and conductive material, such as metal flakes.
- Follow prescribed airflow guidelines to ensure that the cooling system functions properly and that exhaust from other equipment does not blow into the intake vents of the device.
- Follow the prescribed electrostatic discharge (ESD) prevention procedures to prevent damaging the equipment. Static discharge can cause components to fail completely or intermittently over time.
- Install the device in a secure area, so that only authorized personnel can access the device.

Copyright © 2018, Juniper Networks, Inc.

Related Documentation

- Prevention of Electrostatic Discharge Damage on page 360

Site Electrical Wiring Guidelines

Table 70 on page 218 describes the factors you must consider while planning the electrical wiring at your site.

WARNING: **It is particularly important to provide a properly grounded and shielded environment and to use electrical surge-suppression devices.**

Table 70: Site Electrical Wiring Guidelines

Site Wiring Factor	Guidelines
Signaling limitations	If your site experiences any of the following problems, consult experts in electrical surge suppression and shielding: • Improperly installed wires cause radio frequency interference (RFI). • Damage from lightning strikes occurs when wires exceed recommended distances or pass between buildings. • Electromagnetic pulses (EMPs) caused by lightning damage unshielded conductors and electronic devices.
Radio frequency interference	To reduce or eliminate RFI from your site wiring, do the following: • Use a twisted-pair cable with a good distribution of grounding conductors. • If you must exceed the recommended distances, use a high-quality twisted-pair cable with one ground conductor for each data signal when applicable.
Electromagnetic compatibility	If your site is susceptible to problems with electromagnetic compatibility (EMC), particularly from lightning or radio transmitters, seek expert advice. Some of the problems caused by strong sources of electromagnetic interference (EMI) are: • Destruction of the signal drivers and receivers in the device • Electrical hazards as a result of power surges conducted over the lines into the equipment

Related Documentation

- General Safety Guidelines and Warnings on page 329
- General Electrical Safety Guidelines and Warnings on page 359

Environmental Requirements and Specifications for a QFX3100 Director Device

The device must be installed in a rack or cabinet housed in a dry, clean, well-ventilated, and temperature-controlled environment.

Follow these environmental guidelines:

- The site must be as dust-free as possible, because dust can clog air intake vents and filters, reducing the efficiency of the device cooling system.

 Copyright © 2018, Juniper Networks, Inc.

- Maintain ambient airflow for normal device operation. If the airflow is blocked or restricted, or if the intake air is too warm, the device might overheat, leading to the device temperature monitor shutting down the device to protect the hardware components.

Table 71 on page 219 provides the required environmental conditions for normal device operation.

Table 71: QFX3100 Director Device Environmental Tolerances

Description	Tolerance
Altitude	No performance degradation to 10,000 feet (3048 meters)
Relative humidity	Normal operation ensured in relative humidity range of 5% through 85%, noncondensing
Temperature	• Normal operation ensured in temperature range of 32° F through 104° F (0° C through 40° C) • Short-term operation ensured in temperature range of 23° F through 131° F (–5° C through 55° C) NOTE: As defined in NEBS GR-63-CORE, Issue 3, short-term events can be up to 96 hours in duration but not more than 15 days per year. • Nonoperating storage temperature in shipping container: –40° F through 158° F (–40° C through 70° C)

NOTE: **Install QFX Series devices only in restricted areas, such as dedicated equipment rooms and equipment closets, in accordance with Articles 110-16, 110-17, and 110-18 of the National Electrical Code, ANSI/NFPA 70.**

Related Documentation

- Clearance Requirements for Airflow and Hardware Maintenance for a QFX3100 Director Device on page 245
- Installing and Connecting a QFX3100 Director Device on page 377

Environmental Requirements and Specifications for a QFX3008-I Interconnect Device

The QFX3008-I Interconnect device chassis must be installed in a rack or cabinet housed in a dry, clean, well-ventilated, and temperature-controlled environment.

Follow these environmental guidelines:

- The site must be as dust-free as possible, because dust can clog air intake vents and filters, reducing the efficiency of the device cooling system.
- Maintain ambient airflow for normal device operation. If the airflow is blocked or restricted, or if the intake air is too warm, the device might overheat, leading to the device temperature monitor shutting down the device to protect the hardware components.

Table 72 on page 220 provides the required environmental conditions for normal device operation.

Table 72: QFX3008-I Interconnect Device Environmental Tolerances

Description	Tolerance
Altitude	No performance degradation to 10,000 feet (3048 meters)
Relative humidity	Normal operation ensured in relative humidity range of 5% through 85%, noncondensing
Temperature	• Normal operation ensured in temperature range of 32° F through 104° F (0° C through 40° C) • Short-term operation ensured in temperature range of 23° F through 122° F (–5° C through 50° C) NOTE: As defined in NEBS GR-63-CORE, Issue 3, short-term events can be up to 96 hours in duration but not more than 15 days per year. • Nonoperating storage temperature in shipping container: –40° F through 158° F (–40° C through 70° C)
Seismic	Designed to comply with Zone 4 earthquake requirements per NEBS GR-63-CORE, Issue 3.

NOTE: **Install QFX Series devices only in restricted areas, such as dedicated equipment rooms and equipment closets, in accordance with Articles 110-16, 110-17, and 110-18 of the National Electrical Code, ANSI/NFPA 70.**

Related Documentation

- Clearance Requirements for Airflow and Hardware Maintenance for a QFX3008-I Interconnect Device on page 246
- Installing and Connecting a QFX3008-I Interconnect Device on page 389

Environmental Requirements and Specifications for QFX3600 and QFX3600-I Devices

The QFX3600 and QFX3600-I devices must be installed in a rack or cabinet housed in a dry, clean, well-ventilated, and temperature-controlled environment.

Follow these environmental guidelines:

- The site must be as dust-free as possible, because dust can clog air intake vents and filters, reducing the efficiency of the device cooling system.
- Maintain ambient airflow for normal device operation. If the airflow is blocked or restricted, or if the intake air is too warm, the device might overheat, leading to the device temperature monitor shutting down the device to protect the hardware components.

Table 73 on page 221 provides the required environmental conditions for normal device operation.

 Copyright © 2018, Juniper Networks, Inc.

Table 73: QFX3600 and QFX3600-I Device Environmental Tolerances

Description	Tolerance
Altitude	No performance degradation to 10,000 feet (3048 meters)
Relative humidity	Normal operation ensured in relative humidity range of 5% through 85%, noncondensing
Temperature	• Normal operation ensured in temperature range of 32° F through 104° F (0° C through 40° C) • Short-term operation ensured in temperature range of 23° F through 131° F (–5° C through 55° C) NOTE: As defined in NEBS GR-63-CORE, Issue 3, short-term events can be up to 96 hours in duration but not more than 15 days per year. • Nonoperating storage temperature in shipping container: –40° F through 158° F (–40° C through 70° C)
Seismic	Designed to comply with Zone 4 earthquake requirements per NEBS GR-63-CORE, Issue 3.

NOTE: **Install QFX Series devices only in restricted areas, such as dedicated equipment rooms and equipment closets, in accordance with Articles 110-16, 110-17, and 110-18 of the National Electrical Code, ANSI/NFPA 70.**

Related Documentation

- Clearance Requirements for Airflow and Hardware Maintenance for a QFX3600 or QFX3600-I Device on page 249
- Installing and Connecting a QFX3600 or QFX3600-I Device on page 453

Environmental Requirements and Specifications for a QFX3500 Device

The device must be installed in a rack or cabinet housed in a dry, clean, well-ventilated, and temperature-controlled environment.

Follow these environmental guidelines:

- The site must be as dust-free as possible, because dust can clog air intake vents and filters, reducing the efficiency of the device cooling system.
- Maintain ambient airflow for normal device operation. If the airflow is blocked or restricted, or if the intake air is too warm, the device might overheat, leading to the device temperature monitor shutting down the device to protect the hardware components.

Table 74 on page 222 provides the required environmental conditions for normal device operation.

Table 74: QFX3500 Device Environmental Tolerances

Description	Tolerance
Altitude	No performance degradation to 10,000 feet (3048 meters)
Relative humidity	Normal operation ensured in relative humidity range of 5% through 85%, noncondensing
Temperature	• Normal operation ensured in temperature range of 32° F through 104° F (0° C through 40° C) • Short-term operation ensured in temperature range of 23° F through 131° F (–5° C through 55° C) NOTE: As defined in NEBS GR-63-CORE, Issue 3, short-term events can be up to 96 hours in duration but not more than 15 days per year. • Nonoperating storage temperature in shipping container: –40° F through 158° F (–40° C through 70° C)
Seismic	Designed to comply with Zone 4 earthquake requirements per NEBS GR-63-CORE, Issue 3.

NOTE: **Install QFX Series devices only in restricted areas, such as dedicated equipment rooms and equipment closets, in accordance with Articles 110-16, 110-17, and 110-18 of the National Electrical Code, ANSI/NFPA 70.**

Related Documentation

- Clearance Requirements for Airflow and Hardware Maintenance for a QFX3500 Device on page 250
- Installing and Connecting a QFX3500 Device on page 473

Environmental Requirements and Specifications for a QFX5100 Device

The switch must be installed in a rack or cabinet. It must be housed in a dry, clean, well-ventilated, and temperature-controlled environment.

Follow these environmental guidelines:

- The site must be as dust-free as possible, because dust can clog air intake vents and filters, reducing the efficiency of the switch cooling system.
- Maintain ambient airflow for normal switch operation. If the airflow is blocked or restricted, or if the intake air is too warm, the switch might overheat, leading to the switch temperature monitor shutting down the device to protect the hardware components.

Table 75 on page 223 provides the required environmental conditions for normal switch operation.

Copyright © 2018, Juniper Networks, Inc.

Table 75: QFX5100 Switch Environmental Tolerances

Description	Tolerance
Altitude	No performance degradation to 6,562 feet (2000 meters)
Relative humidity	Normal operation ensured in relative humidity range of 5% through 90%, noncondensing • Short-term operation ensured in relative humidity range of 5% through 93%, noncondensing NOTE: As defined in NEBS GR-63-CORE, Issue 3, short-term events can be up to 96 hours in duration but not more than 15 days per year.
Temperature	• Normal operation ensured in temperature range of 32° F through 104° F (0° C through 40° C) NOTE: Customers with QFX5100-48T switches should ensure the room temperature does not exceed a 2° C increase or decrease per minute. • Nonoperating storage temperature in shipping container: –40° F through 158° F (–40° C through 70° C)
Seismic	Designed to comply with Zone 4 earthquake requirements per NEBS GR-63-CORE, Issue 3.

NOTE: **Install QFX Series devices only in restricted areas, such as dedicated equipment rooms and equipment closets, in accordance with Articles 110-16, 110-17, and 110-18 of the National Electrical Code, ANSI/NFPA 70.**

Related Documentation

- Clearance Requirements for Airflow and Hardware Maintenance for a QFX5100 Device on page 248
- Installing and Connecting a QFX5100 Device on page 433

Environmental Requirements and Specifications for EX Series Switches

The switch must be installed in a rack or cabinet housed in a dry, clean, well-ventilated, and temperature-controlled environment.

Ensure that these environmental guidelines are followed:

- The site must be as dust-free as possible, because dust can clog air intake vents and filters, reducing the efficiency of the switch cooling system.
- Maintain ambient airflow for normal switch operation. If the airflow is blocked or restricted, or if the intake air is too warm, the switch might overheat, leading to the switch temperature monitor shutting down the switch to protect the hardware components.

Copyright © 2018, Juniper Networks, Inc.

Table 76 on page 224 provides the required environmental conditions for normal switch operation.

Table 76: EX Series Switch Environmental Tolerances

Switch or device	Environment Tolerance			
	Altitude	Relative Humidity	Temperature	Seismic
EX2200-C	No performance degradation up to 5,000 feet (1524 meters)	Normal operation ensured in the relative humidity range 10% through 85% (noncondensing)	Normal operation ensured in the temperature range 32° F (0° C) through 104° F (40° C) at altitudes up to 5,000 ft (1,524 m). For information about extended temperature SFP transceivers supported on EX2200 switches, see *Pluggable Transceivers Supported on EX2200 Switches*.	Complies with Zone 4 earthquake requirements as per GR-63, Issue 4.
EX2200 (except EX2200-C switches)	No performance degradation up to 10,000 feet (3048 meters)	Normal operation ensured in the relative humidity range 10% through 85% (noncondensing)	Normal operation ensured in the temperature range 32° F (0° C) through 113° F (45° C)	Complies with Zone 4 earthquake requirements as per GR-63, Issue 4.
EX2300-C	No performance degradation up to 5,000 feet (1524 meters)	Normal operation ensured in the relative humidity range 10% through 85% (noncondensing)	Normal operation ensured in the temperature range 32° F (0° C) through 104° F (40° C)	Complies with Zone 4 earthquake requirements as per GR-63, Issue 4.
EX2300 (except EX2300-C switches)	No performance degradation up to 13,000 feet (3962 meters) at 104° F (40° C) as per GR-63	Normal operation ensured in the relative humidity range 10% through 85% (noncondensing)	Normal operation ensured in the temperature range 32° F (0° C) through 113° F (45° C)	Complies with Zone 4 earthquake requirements as per GR-63, Issue 4.
EX3200	No performance degradation up to 10,000 feet (3048 meters)	Normal operation ensured in the relative humidity range 10% through 85% (noncondensing)	Normal operation ensured in the temperature range 32° F (0° C) through 113° F (45° C)	Complies with Zone 4 earthquake requirements as per GR-63, Issue 4.
EX3300	No performance degradation up to 10,000 feet (3048 meters)	Normal operation ensured in the relative humidity range 10% through 85% (noncondensing)	Normal operation ensured in the temperature range 32° F (0° C) through 113° F (45° C)	Complies with Zone 4 earthquake requirements as per GR-63, Issue 4.
EX3400	No performance degradation up to 10,000 feet (3048 meters)	Normal operation ensured in the relative humidity range 10% through 85% (noncondensing)	Normal operation ensured in the temperature range 32° F (0° C) through 113° F (45° C)	Complies with Zone 4 earthquake requirements as per GR-63, Issue 4.

Copyright © 2018, Juniper Networks, Inc.

Table 76: EX Series Switch Environmental Tolerances (continued)

Switch or device	Environment Tolerance			
	Altitude	Relative Humidity	Temperature	Seismic
EX4200	No performance degradation up to 10,000 feet (3048 meters)	Normal operation ensured in the relative humidity range 10% through 85% (noncondensing)	Normal operation ensured in the temperature range 32° F (0° C) through 113° F (45° C)	Complies with Zone 4 earthquake requirements as per GR-63, Issue 4.
EX4300	EX4300 switches except the EX4300-48MP model—No performance degradation up to 10,000 feet (3048 meters) EX4300-48MP model—No performance degradation up to 6,000 feet (1829 meters)	EX4300 switches except the EX4300-48MP model—Normal operation ensured in the relative humidity range 10% through 85% (noncondensing) EX4300-48MP model—Normal operation ensured in the relative humidity range 5% through 90% (noncondensing)	Normal operation ensured in the temperature range 32° F (0° C) through 113° F (45° C)	Complies with Zone 4 earthquake requirements as per GR-63, Issue 4.
EX4500	No performance degradation up to 10,000 feet (3048 meters)	Normal operation ensured in the relative humidity range 10% through 85% (noncondensing)	Normal operation ensured in the temperature range 32° F (0° C) through 113° F (45° C)	Complies with Zone 4 earthquake requirements as per GR-63, Issue 4.
EX4550	No performance degradation up to 10,000 feet (3048 meters)	Normal operation ensured in the relative humidity range 10% through 85% (noncondensing)	• EX4550-32F switches—Normal operation ensured in the temperature range 32° F (0° C) through 113° F (45° C) • EX4550-32T switches—Normal operation is ensured in the temperature range 32° F through 104° F (40° C)	Complies with Zone 4 earthquake requirements as per GR-63, Issue 4.

Copyright © 2018, Juniper Networks, Inc.

Table 76: EX Series Switch Environmental Tolerances (continued)

Switch or device	Environment Tolerance			
	Altitude	Relative Humidity	Temperature	Seismic
EX4600	No performance degradation to 6,562 feet (2000 meters)	Normal operation ensured in the relative humidity range 5% through 90%, noncondensing • Short-term operation ensured in the relative humidity range 5% through 93%, noncondensing NOTE: As defined in NEBS GR-63-CORE, Issue 4, short-term events can be up to 96 hours in duration but not more than 15 days per year.	• Normal operation ensured in the temperature range 32° F (0° C) through 113° F (45° C) • Nonoperating storage temperature in shipping container: –40° F (–40° C) through 158° F (70° C)	Designed to comply with Zone 4 earthquake requirements per NEBS GR-63-CORE, Issue 4.
EX4650	No performance degradation to 6,000 feet (1829 meters)	Normal operation ensured in the relative humidity range 10% through 85% (condensing)	Normal operation is ensured in the temperature range 32° F (0° C) through 104° F (40° C)	Complies with Zone 4 earthquake requirements as per GR-63, Issue 4.
EX6210	No performance degradation up to 10,000 feet (3048 meters)	Normal operation ensured in the relative humidity range 10% through 85% (noncondensing)	Normal operation is ensured in the temperature range 32° F (0° C) through 104° F (40° C)	Complies with Zone 4 earthquake requirements as per GR-63, Issue 4.
EX8208	No performance degradation up to 10,000 feet (3048 meters)	Normal operation ensured in the relative humidity range 10% through 85% (noncondensing)	Normal operation is ensured in the temperature range 32° F (0° C) through 104° F (40° C)	Complies with Zone 4 earthquake requirements as per GR-63, Issue 4.
EX8216	No performance degradation up to 10,000 feet (3048 meters)	Normal operation ensured in the relative humidity range 10% through 85% (noncondensing)	Normal operation is ensured in the temperature range 32° F (0° C) through 104° F (40° C)	Complies with Zone 4 earthquake requirements as per GR-63, Issue 4.
EX9204	No performance degradation up to 10,000 feet (3048 meters)	Normal operation ensured in the relative humidity range 5% through 90% (noncondensing)	Normal operation is ensured in the temperature range 32° F (0° C) through 104° F (40° C) Nonoperating storage temperature in shipping container: –40° F (–40° C) to 158° F (70° C)	Complies with Zone 4 earthquake requirements as per GR-63.

Copyright © 2018, Juniper Networks, Inc.

Table 76: EX Series Switch Environmental Tolerances (continued)

Switch or device	Environment Tolerance			
	Altitude	Relative Humidity	Temperature	Seismic
EX9208	No performance degradation up to 10,000 feet (3048 meters)	Normal operation ensured in the relative humidity range 5% through 90% (noncondensing)	Normal operation is ensured in the temperature range 32° F (0° C) through 104° F (40° C) Nonoperating storage temperature in shipping container: –40° F (–40° C) to 158° F (70° C)	Complies with Zone 4 earthquake requirements as per GR-63.
EX9214	No performance degradation up to 10,000 feet (3048 meters)	Normal operation ensured in the relative humidity range 5% through 90% (noncondensing)	Normal operation is ensured in the temperature range 32° F (0° C) through 104° F (40° C) Nonoperating storage temperature in shipping container: –40° F (–40° C) through 158° F (70° C)	Complies with Zone 4 earthquake requirements as per GR-63.
EX9251 The maximum thermal output is 1705 BTU/hour (500 W).	No performance degradation up to 10,000 ft (3048 m)	Normal operation ensured in relative humidity range of 5% to 90%, noncondensing	Normal operation ensured in temperature range of 32° F (0° C) to 104° F (40° C) Nonoperating storage temperature in shipping container: –40° F (–40° C) to 158° F (70° C)	Complies with Telcordia Technologies Zone 4 earthquake requirements
XRE200	No performance degradation up to 10,000 feet (3048 meters)	Normal operation ensured in the relative humidity range 10% through 85% (noncondensing)	Normal operation ensured in the temperature range 41° F (5° C) through 104° F (40° C)	Complies with Zone 4 earthquake requirements as per GR-63, Issue 4.

NOTE: **Install EX Series switches only in restricted areas, such as dedicated equipment rooms and equipment closets, in accordance with Articles 110–16, 110–17, and 110–18 of the National Electrical Code, ANSI/NFPA 70.**

Copyright © 2018, Juniper Networks, Inc.

CHAPTER 10

Rack and Cabinet Requirements

- Rack Requirements for a QFX3100 Director Device on page 230
- Rack Requirements for a QFX3008-I Interconnect Device on page 231
- Rack Requirements for a QFX5100 Device on page 232
- Rack Requirements for a QFX3600 or QFX3600-I Device on page 233
- Rack Requirements for a QFX3500 Device on page 235
- Rack Requirements for EX4300 Switches on page 236
- Rack Requirements for EX4200 Switches on page 237
- Cabinet Requirements for a QFX3100 Director Device on page 238
- Cabinet Requirements for a QFX3008-I Interconnect Device on page 239
- Cabinet Requirements for a QFX5100 Device on page 240
- Cabinet Requirements for a QFX3600 or QFX3600-I Device on page 241
- Cabinet Requirements for a QFX3500 Device on page 242
- Cabinet Requirements for EX4300 Switches on page 243
- Cabinet Requirements for EX4200 Switches on page 244
- Clearance Requirements for Airflow and Hardware Maintenance for a QFX3100 Director Device on page 245
- Clearance Requirements for Airflow and Hardware Maintenance for a QFX3008-I Interconnect Device on page 246
- Clearance Requirements for Airflow and Hardware Maintenance for a QFX5100 Device on page 248
- Clearance Requirements for Airflow and Hardware Maintenance for a QFX3600 or QFX3600-I Device on page 249
- Clearance Requirements for Airflow and Hardware Maintenance for a QFX3500 Device on page 250
- Clearance Requirements for Airflow and Hardware Maintenance for EX4300 Switches on page 251
- Clearance Requirements for Airflow and Hardware Maintenance for EX4200 Switches on page 254

Copyright © 2018, Juniper Networks, Inc.

Rack Requirements for a QFX3100 Director Device

You can mount the QFX3100 Director device on two-post racks or four-post racks.

Rack requirements consist of:

- Rack type
- Mounting bracket hole spacing
- Rack size and strength
- Rack connection to the building structure

Table 77 on page 230 provides the rack requirements and specifications for the QFX3100 Director device.

Table 77: Rack Requirements and Specifications for the QFX3100 Director Device

Rack Requirement	Guidelines
Rack type	Use a two-post rack or a four-post rack. You can mount the switch on any two-post or four-post rack that provides bracket holes or hole patterns spaced at 1 U (1.75 in. or 4.45 cm) increments and that meets the size and strength requirements to support the weight. A U is the standard rack unit defined in *Cabinets, Racks, Panels, and Associated Equipment* (document number EIA-310-D) published by the Electronics Industry Association. The rack must meet the strength requirements to support the weight of the chassis.
Mounting bracket hole spacing	The holes in the mounting brackets are spaced at 1 U (1.75 in. or 4.45 cm), so that the QFX3100 Director device can be mounted in any rack that provides holes spaced at that distance.

Rack size and strength	• Ensure that the rack complies with one of these standards:
	  ◦ A 19-in. rack as defined in *Cabinets, Racks, Panels, and Associated Equipment* (document number EIA-310-D) published by the Electronics Industry Association.
	  ◦ A 600-mm rack as defined in the four-part *Equipment Engineering (EE); European telecommunications standard for equipment practice* (document numbers ETS 300 119-1 through 119-4) published by the European Telecommunications Standards Institute.
	  The horizontal spacing between the rails in a rack that complies with this standard is usually wider than the QFX3100 Director device's mounting brackets, which measure 19 in. (48.2 cm) from outer edge to outer edge. Use approved wing devices to narrow the opening between the rails as required.
	• Ensure that the rack is one of the following standard lengths:
	  ◦ 23.62 in. (600 mm)
	  ◦ 30 in. (762 mm)
	  ◦ 21.5 in. (546 mm)
	• Ensure that the rack rails are spaced widely enough to accommodate the QFX3100 Director device chassis' external dimensions. The outer edges of the front-mounting brackets extend the width of the chassis to 19 in. (48.2 cm).
	• The rack must be strong enough to support the weight of the QFX3100 Director device.
	• Ensure that the spacing of rails and adjacent racks allows for the proper clearance around the QFX3100 Director device and rack.

Copyright © 2018, Juniper Networks, Inc.

Table 77: Rack Requirements and Specifications for the QFX3100 Director Device (continued)

Rack Requirement	Guidelines
Rack connection to building structure	• Secure the rack to the building structure. • If earthquakes are a possibility in your geographical area, secure the rack to the floor. • Secure the rack to the ceiling brackets as well as wall or floor brackets for maximum stability.

One pair of mounting brackets for mounting the QFX3100 Director device on two or four posts of a rack is supplied with each QFX3100 Director device.

Related Documentation

- Chassis Physical Specifications for a QFX3100 Director Device on page 29
- Cabinet Requirements for a QFX3100 Director Device on page 238
- Rack-Mounting and Cabinet-Mounting Warnings on page 343
- Mounting a QFX3100 Director Device on Four Posts in a Rack or Cabinet on page 381
- Mounting a QFX3100 Director Device on Two Posts in a Rack or Cabinet on page 380

Rack Requirements for a QFX3008-I Interconnect Device

You can mount a QFX3008-I Interconnect device on two-post or four-post racks.

Rack requirements consist of:

- Rack type
- Mounting bracket hole spacing
- Rack size and strength
- Rack connection to the building structure

Table 78 on page 231 summarizes rack requirements and specifications for a QFX3008-I Interconnect device.

Table 78: Rack Requirements and Specifications for a QFX3008-I Interconnect Device

Rack Requirement	Guidelines
Rack type and mounting bracket hole spacing	You can mount the device on any two-post or four-post rack that provides bracket holes or hole patterns spaced at 1 U (1.75 in. or 4.44 cm) increments and that meets the size and strength requirements specified in this table. A U is the standard rack unit defined in *Cabinets, Racks, Panels, and Associated Equipment* (document number EIA-310–D) published by the Electronics Industry Association. You can stack two QFX3008-I Interconnect devices in a rack that has at least 42 U. In all cases, the rack must meet the strength requirements to support the weight of the switch.

Table 78: Rack Requirements and Specifications for a QFX3008-I Interconnect Device (continued)

Rack Requirement	Guidelines
Rack size and strength	• Ensure that the rack is a 19-in. rack as defined in *Cabinets, Racks, Panels, and Associated Equipment* (document number EIA-310–D) published by the Electronics Industry Association. • Ensure that the rack rails are spaced widely enough to accommodate the QFX3008-I Interconnect device external dimensions of 17.3 in. (43.9 cm) width. The outer edges of the front-mounting brackets extend the width to 19 in. (48.3 cm). • The QFX3008-I Interconnect device height of 36.65 in. (93.09 cm) is approximately 21 U. • The rack must be strong enough to support the weight of the fully configured device. A fully configured QFX3008-I Interconnect device weighs approximately 650 lb (295 kg). If you stack two fully configured devices in one rack, that rack must support up to 1300 lb (590 kg). • Ensure that the spacing of rails and adjacent racks allows for the proper clearance around the switch and rack as specified in "Clearance Requirements for Airflow and Hardware Maintenance for a QFX3008-I Interconnect Device" on page 246.
Rack connection to the building structure	• Secure the rack to the building structure. • If earthquakes are a possibility in your geographical area, secure the rack to the floor. • Secure the rack to the ceiling brackets as well as wall or floor brackets for maximum stability.

Related Documentation

- Rack-Mounting and Cabinet-Mounting Warnings on page 343
- Cabinet Requirements for a QFX3008-I Interconnect Device on page 239
- Chassis Physical Specifications for a QFX3008-I Interconnect Device on page 45

Rack Requirements for a QFX5100 Device

All QFX5100 devices are designed to be installed on four-post racks. The QFX5100-96S device can also be installed on two-post racks.

Rack requirements consist of:

- Rack type
- Mounting bracket hole spacing
- Rack size and strength

Table 79 on page 233 provides the rack requirements and specifications for the QFX5100 device.

Copyright © 2018, Juniper Networks, Inc.

Table 79: Rack Requirements for the QFX5100 Device

Rack Requirement	Guidelines
Rack type (all product SKUs)	Use a four-post rack that provides bracket holes or hole patterns spaced at 1 U (1.75 in. or 4.45 cm) increments and that meets the size and strength requirements to support the weight. A U is the standard rack unit defined in *Cabinets, Racks, Panels, and Associated Equipment* (document number EIA-310–D) published by the Electronics Industry Association.
Rack type (QFX5100-96S only)	Use a two-post or four-post rack that provides bracket holes or hole patterns spaced at 1 U (1.75 in. or 4.45 cm) increments and that meets the size and strength requirements to support the weight.
Mounting bracket hole spacing (all product SKUs)	The holes in the mounting brackets are spaced at 1 U (1.75 in. or 4.45 cm), so that the switch can be mounted in any rack that provides holes spaced at that distance.
Rack size and strength (all product SKUs)	• Ensure that the rack complies with the standards for a 19-in. or 23-in. rack as defined in *Cabinets, Racks, Panels, and Associated Equipment* (document number EIA-310–D) published by the Electronics Industry Association. • A 600-mm rack as defined in the four-part *Equipment Engineering (EE); European telecommunications standard for equipment practice* (document numbers ETS 300 119-1 through 119-4) published by the European Telecommunications Standards Institute. The horizontal spacing between the rails in a rack that complies with this standard is usually wider than the device's mounting brackets, which measure 19 in. (48.26 cm) from outer edge to outer edge. Use approved wing devices to narrow the opening between the rails as required. • Ensure that the rack rails are spaced widely enough to accommodate the switch chassis' external dimensions. The outer edges of the front-mounting brackets extend the width to 19 in. (48.26 cm). • For four-post installations, the front and rear rack rails must be spaced between 23.6 in. (60 cm) and 36 in. (91.4 cm) front-to-back. • The rack must be strong enough to support the weight of the switch. • Ensure that the spacing of rails and adjacent racks allows for proper clearance around the switch and rack.
Rack connection to building structure	• Secure the rack to the building structure. • If earthquakes are a possibility in your geographical area, secure the rack to the floor. • Secure the rack to the ceiling brackets as well as wall or floor brackets for maximum stability.

Related Documentation

- Chassis Physical Specifications for a QFX5100 Device on page 76
- Rack-Mounting and Cabinet-Mounting Warnings on page 343
- Clearance Requirements for Airflow and Hardware Maintenance for a QFX5100 Device on page 248
- Mounting a QFX5100 Device in a Rack or Cabinet on page 435

Rack Requirements for a QFX3600 or QFX3600-I Device

QFX3600 and QFX3600-I devices are designed to be installed on two-post racks or four-post racks.

Rack requirements consist of:

- Rack type
- Mounting bracket hole spacing
- Rack size and strength
- Rack connection to the building structure

Table 80 on page 234 provides the rack requirements and specifications for a QFX3600 or QFX3600-I device.

Table 80: Rack Requirements for a QFX3600 or QFX3600-I Device

Rack Requirement	Guidelines
Rack type	Use a two-post or a four-post rack. You can mount the switch on any two-post or four-post rack that provides bracket holes or hole patterns spaced at 1 U (1.75 in./4.45 cm) increments and that meets the size and strength requirements to support the weight. A U is the standard rack unit defined in *Cabinets, Racks, Panels, and Associated Equipment* (document number EIA-310–D) published by the Electronics Industry Association (http://www.eia.org).
Mounting bracket hole spacing	The holes in the mounting brackets are spaced at 1 U (1.75 in. or 4.45 cm), so that the switch can be mounted in any rack that provides holes spaced at that distance.
Rack size and strength	• Ensure that the rack complies with the standards for a 19-in. rack as defined in *Cabinets, Racks, Panels, and Associated Equipment* (document number EIA-310–D) published by the Electronics Industry Association. • Ensure that the rack rails are spaced widely enough to accommodate the device chassis' external dimensions. The outer edges of the mounting brackets extend the width to 19.2 in. (48.8 cm). • On four-post racks, the front and rear rack rails must be spaced between 19.3 in. (49 cm) and 36 in. (91.4 cm) front-to-back. • The rack must be strong enough to support the weight of the device. • Ensure that the spacing of rails and adjacent racks allows for proper clearance around the device and rack.
Rack connection to building structure	• Secure the rack to the building structure. • If earthquakes are a possibility in your geographical area, secure the rack to the floor. • Secure the rack to the ceiling brackets as well as wall or floor brackets for maximum stability.

The following types of mounting brackets are supplied with each switch:

- One pair of mounting brackets for front-mounting or rear-mounting the switch on two posts of a rack
- One pair of mounting brackets for mid-mounting the switch (front or rear facing) on two posts of a rack
- One pair of fixed rail mounting brackets for front-mounting or rear-mounting the switch on four posts of a rack
- One pair of adjustable rail mounting brackets for front-mounting or rear-mounting the switch on four posts of a rack

Copyright © 2018, Juniper Networks, Inc.

Related Documentation

- Chassis Physical Specifications for QFX3600 and QFX3600-I Devices on page 103
- Rack-Mounting and Cabinet-Mounting Warnings on page 343
- Clearance Requirements for Airflow and Hardware Maintenance for a QFX3600 or QFX3600-I Device on page 249
- Mounting a QFX3600 or QFX3600-I Device on Four Posts in a Rack or Cabinet on page 458
- Mounting a QFX3600 or QFX3600-I Device on Two Posts in a Rack or Cabinet on page 455

Rack Requirements for a QFX3500 Device

A QFX3500 device is designed to be installed on four-post racks.

Rack requirements consist of:

- Rack type
- Mounting bracket hole spacing
- Rack size and strength
- Rack connection to the building structure

Table 81 on page 235 provides the rack requirements and specifications for the QFX3500 device.

Table 81: Rack Requirements for the QFX3500 Device

Rack Requirement	Guidelines
Rack type	Use a four-post rack. You can mount the device on a four-post rack that provides bracket holes or hole patterns spaced at 1 U (1.75 in. or 4.45 cm) increments and that meets the size and strength requirements to support the weight. A U is the standard rack unit defined in *Cabinets, Racks, Panels, and Associated Equipment* (document number EIA-310–D) published by the Electronics Industry Association.
Mounting bracket hole spacing	The holes in the mounting brackets are spaced at 1 U (1.75 in. or 4.45 cm), so that the device can be mounted in any rack that provides holes spaced at that distance.
Rack size and strength	• Ensure that the rack complies with the standards for a 19-in. rack as defined in *Cabinets, Racks, Panels, and Associated Equipment* (document number EIA-310–D) published by the Electronics Industry Association. • Ensure that the rack rails are spaced widely enough to accommodate the device chassis' external dimensions. The outer edges of the front-mounting brackets extend the width to 19 in. (48.26 cm). • The front and rear rack rails must be spaced between 28 in. (71.1 cm) and 36 in. (91.4 cm) front-to-back. • The rack must be strong enough to support the weight of the device. • Ensure that the spacing of rails and adjacent racks allows for proper clearance around the device and rack.

Table 81: Rack Requirements for the QFX3500 Device (continued)

Rack Requirement	Guidelines
Rack connection to building structure	• Secure the rack to the building structure. • If earthquakes are a possibility in your geographical area, secure the rack to the floor. • Secure the rack to the ceiling brackets as well as wall or floor brackets for maximum stability.

Related Documentation

- Chassis Physical Specifications for a QFX3500 Chassis on page 121
- Rack-Mounting and Cabinet-Mounting Warnings on page 343
- Clearance Requirements for Airflow and Hardware Maintenance for a QFX3500 Device on page 250
- Mounting a QFX3500 Device in a Rack or Cabinet on page 475

Rack Requirements for EX4300 Switches

You can mount the switch on two-post racks or four-post racks.

Rack requirements consist of:

- Rack type
- Mounting bracket hole spacing
- Rack size and strength
- Rack connection to the building structure

Table 82 on page 236 provides the rack requirements and specifications for the switch.

Table 82: Rack Requirements and Specifications for the Switch

Rack Requirement	Guidelines
Rack type	Use a two-post rack or a four-post rack. You can mount the switch on any two-post or four-post rack that provides bracket holes or hole patterns spaced at 1 U (1.75 in. or 4.45 cm) increments and that meets the size and strength requirements to support the weight. A U is the standard rack unit defined in *Cabinets, Racks, Panels, and Associated Equipment* (document number EIA-310–D) published by the Electronics Industry Association (http://www.eia.org).
Mounting bracket hole spacing	The holes in the mounting brackets are spaced at 1 U (1.75 in. or 4.45 cm), so that the switch can be mounted in any rack that provides holes spaced at that distance.

Copyright © 2018, Juniper Networks, Inc.

Table 82: Rack Requirements and Specifications for the Switch (continued)

Rack Requirement	Guidelines
Rack size and strength	• Ensure that the rack complies with the size and strength standards of a 19-in. rack as defined in *Cabinets, Racks, Panels, and Associated Equipment* (document number EIA-310–D) published by the Electronics Industry Association (http://www.eia.org). • Ensure that the rack rails are spaced widely enough to accommodate the external dimensions of the switch chassis. The outer edges of the front-mounting brackets extend the width of the chassis to 19 in. (48.2 cm). • The rack must be strong enough to support the weight of the switch. • Ensure that the spacing of rails and adjacent racks provides for proper clearance around the switch and rack.
Rack connection to building structure	• Secure the rack to the building structure. • If earthquakes are a possibility in your geographical area, secure the rack to the floor. • Secure the rack to the ceiling brackets as well as wall or floor brackets for maximum stability.

One pair of mounting brackets for mounting the switch on two posts of a rack is supplied with each switch. For mounting the switch on four posts of a rack or cabinet, you can order a four-post rack-mount kit separately.

Related Documentation

- Chassis Physical Specifications for EX4300 Switches on page 155
- Clearance Requirements for Airflow and Hardware Maintenance for EX4300 Switches on page 251
- *Mounting an EX4300 Switch*
- Rack-Mounting and Cabinet-Mounting Warnings on page 343

Rack Requirements for EX4200 Switches

You can mount the switch on two-post racks or four-post racks.

Rack requirements consist of:

- Rack type
- Mounting bracket hole spacing
- Rack size and strength
- Rack connection to the building structure

Table 82 on page 236 provides the rack requirements and specifications for the switch.

Table 83: Rack Requirements and Specifications for the Switch

Rack Requirement	Guidelines
Rack type	Use a two-post rack or a four-post rack. You can mount the switch on any two-post or four-post rack that provides bracket holes or hole patterns spaced at 1 U (1.75 in. or 4.45 cm) increments and that meets the size and strength requirements to support the weight. A U is the standard rack unit defined in *Cabinets, Racks, Panels, and Associated Equipment* (document number EIA-310–D) published by the Electronics Industry Association (http://www.eia.org).
Mounting bracket hole spacing	The holes in the mounting brackets are spaced at 1 U (1.75 in. or 4.45 cm), so that the switch can be mounted in any rack that provides holes spaced at that distance.
Rack size and strength	• Ensure that the rack complies with the size and strength standards of a 19-in. rack as defined in *Cabinets, Racks, Panels, and Associated Equipment* (document number EIA-310–D) published by the Electronics Industry Association (http://www.eia.org). • Ensure that the rack rails are spaced widely enough to accommodate the external dimensions of the switch chassis. The outer edges of the front-mounting brackets extend the width of the chassis to 19 in. (48.2 cm). • The rack must be strong enough to support the weight of the switch. • Ensure that the spacing of rails and adjacent racks provides for proper clearance around the switch and rack.
Rack connection to building structure	• Secure the rack to the building structure. • If earthquakes are a possibility in your geographical area, secure the rack to the floor. • Secure the rack to the ceiling brackets as well as wall or floor brackets for maximum stability.

One pair of mounting brackets for mounting the switch on two posts of a rack is supplied with each switch. For mounting the switch on four posts of a rack or cabinet, you can order a four-post rack-mount kit separately.

Related Documentation

- Chassis Physical Specifications for EX4200 Switches on page 186
- Rack-Mounting and Cabinet-Mounting Warnings on page 343
- Clearance Requirements for Airflow and Hardware Maintenance for EX4200 Switches on page 254
- *Mounting an EX4200 Switch on Two Posts in a Rack or Cabinet*
- *Mounting an EX4200 Switch on Four Posts in a Rack or Cabinet*
- *Mounting an EX4200 Switch in a Recessed Position in a Rack or Cabinet*

Cabinet Requirements for a QFX3100 Director Device

You can mount the QFX3100 Director device in a cabinet that contains a 19-in. rack.

Cabinet requirements consist of:

Copyright © 2018, Juniper Networks, Inc.

- Cabinet size
- Clearance requirements
- Cabinet airflow requirements

Table 84 on page 239 provides the cabinet requirements and specifications for the QFX3100 Director device.

Table 84: Cabinet Requirements and Specifications for the QFX3100 Director Device

Cabinet Requirement	Guidelines
Cabinet size	• You can mount the QFX3100 Director device in a cabinet that contains a 19-in. rack as defined in *Cabinets, Racks, Panels, and Associated Equipment* (document number EIA-310-D) published by the Electronics Industry Association. NOTE: The rack must meet the strength requirements to support the weight of the QFX3100 Director device. • The minimum cabinet size must be able to accommodate the maximum external dimensions of the QFX3100 Director device.
Cabinet clearance	• The outer edges of the mounting brackets extend the width of the chassis to 19 in. (48.3 cm). • The minimum total clearance inside the cabinet is 29.2 in. (74.17 cm) between the inside of the front door and the inside of the rear door.
Cabinet airflow requirements	When you mount the QFX3100 Director device in a cabinet, ensure that ventilation through the cabinet is sufficient to prevent overheating. • Ensure adequate cool air supply to dissipate the thermal output of the QFX3100 Director device or devices. • Ensure that the cabinet allows the chassis hot exhaust air to exit the cabinet without recirculating into the QFX3100 Director device. An open cabinet (without a top or doors) that employs hot air exhaust extraction from the top allows the best airflow through the chassis. If the cabinet contains a top or doors, perforations in these elements assist with removing the hot air exhaust. • Install the QFX3100 Director device in the cabinet in a way that maximizes the open space on the side of the chassis that has the hot air exhaust. This maximizes the clearance for critical airflow. • Route and dress all cables to minimize the blockage of airflow to and from the chassis. • Ensure that the spacing of rails and adjacent cabinets allows for the proper clearance around the QFX3100 Director device and cabinet. • A cabinet larger than the minimum required provides better airflow and reduces the chance of overheating.

Related Documentation

- Mounting a QFX3100 Director Device on Four Posts in a Rack or Cabinet on page 381
- Mounting a QFX3100 Director Device on Two Posts in a Rack or Cabinet on page 380

Cabinet Requirements for a QFX3008-I Interconnect Device

You can mount a QFX3008-I Interconnect device in a cabinet that contains a 19-in. rack as defined in *Cabinets, Racks, Panels, and Associated Equipment* (document number EIA-310-D) published by the Electronics Industry Association.

Cabinet requirements consist of:

- Cabinet size and clearance
- Cabinet airflow requirements

Table 85 on page 240 summarizes cabinet requirements and specifications for a QFX3008-I Interconnect device.

Table 85: Cabinet Requirements and Specifications for a QFX3008-I Interconnect Device

Cabinet Requirement	Guidelines for the QFX3008-I Interconnect Device
Cabinet size and clearance	• The minimum depth required to accommodate a QFX3008-I Interconnect device is 39.52 in. (100.38 cm). Large cabinets improve airflow and reduce the chance of overheating. A U is the standard rack unit defined in *Cabinets, Racks, Panels, and Associated Equipment* (document number EIA-310–D) published by the Electronics Industry Association. • With adequate cooling air and airflow clearance, you can stack two devices in a cabinet that has at least 42 U of usable vertical space. In all cases, the rack must meet the strength requirements to support the weight of the installed devices.
Cabinet airflow requirements	When you mount the device in a cabinet, ensure that ventilation through the cabinet is sufficient to prevent overheating. Consider the following requirements list when planning for chassis cooling: • Ensure that the cool air supply you provide through the cabinet adequately dissipates the thermal output of the device (or devices). • Ensure that the cabinet allows the chassis hot exhaust air to exit the cabinet without recirculating into the device. An open cabinet (without a top or doors) that employs hot air exhaust extraction from the top allows the best airflow through the chassis. If the cabinet contains a top or doors, perforations in these elements assist with removing the hot air exhaust. For an illustration of chassis airflow, see "Clearance Requirements for Airflow and Hardware Maintenance for a QFX3008-I Interconnect Device" on page 246. • The device fans exhaust hot air through the rear of the chassis. Install the device in the cabinet in a way that maximizes the open space on the rear of the chassis. This maximizes the clearance for critical airflow. • Route and dress all cables to minimize the blockage of airflow to and from the chassis. • Ensure that the spacing of rails and adjacent racks allows for the proper clearance around the switch and rack as specified in "Clearance Requirements for Airflow and Hardware Maintenance for a QFX3008-I Interconnect Device" on page 246.

Related Documentation

- Rack-Mounting and Cabinet-Mounting Warnings on page 343
- Rack Requirements for a QFX3008-I Interconnect Device on page 231
- Chassis Physical Specifications for a QFX3008-I Interconnect Device on page 45

Cabinet Requirements for a QFX5100 Device

You can mount the QFX5100 device in an enclosure or cabinet that contains a four-post 19-in. open rack as defined in *Cabinets, Racks, Panels, and Associated Equipment* (document number EIA-310-D) published by the Electronics Industry Association.

Cabinet requirements consist of:

Copyright © 2018, Juniper Networks, Inc.

- Cabinet size and clearance
- Cabinet airflow requirements

Table 86 on page 241 provides the cabinet requirements and specifications for the QFX5100 device.

Table 86: Cabinet Requirements for the QFX5100 Device

Cabinet Requirement	Guidelines
Cabinet size and clearance	The minimum cabinet size for accommodating a QFX5100 device is 36 in. (91.4 cm) deep. Large cabinets improve airflow and reduce the chance of overheating.
Cabinet airflow requirements	When you mount the switch in a cabinet, ensure that ventilation through the cabinet is sufficient to prevent overheating. • Ensure that the cool air supply you provide through the cabinet adequately dissipates the thermal output of the switch (or switches). • Ensure that the cabinet allows the chassis hot exhaust air to exit the cabinet without recirculating into the switch. An open cabinet (without a top or doors) that employs hot air exhaust extraction from the top allows the best airflow through the chassis. If the cabinet contains a top or doors, perforations in these elements assist with removing the hot air exhaust. • The QFX5100 device fans exhaust hot air either through the vents on the port panel or through the fans and power supplies. Install the switch in the cabinet in a way that maximizes the open space on the FRU side of the chassis. This maximizes the clearance for critical airflow. • Route and dress all cables to minimize the blockage of airflow to and from the chassis. • Ensure that the spacing of rails and adjacent cabinets allows for the proper clearance around the switch and cabinet.

Related Documentation

- Clearance Requirements for Airflow and Hardware Maintenance for a QFX5100 Device on page 248
- Rack Requirements for a QFX5100 Device on page 232
- Mounting a QFX5100 Device in a Rack or Cabinet on page 435

Cabinet Requirements for a QFX3600 or QFX3600-I Device

You can mount a QFX3600 or QFX3600-I device in a cabinet that contains a four-post 19-in. rack as defined in *Cabinets, Racks, Panels, and Associated Equipment* (document number EIA-310-D) published by the former Electronics Industry Association.

Cabinet requirements consist of:

- Cabinet size and clearance
- Cabinet airflow requirements

Table 87 on page 242 provides the cabinet requirements and specifications for a QFX3600 or QFX3600-I device.

Table 87: Cabinet Requirements for a QFX3600 or QFX3600-I Device

Cabinet Requirement	Guidelines
Cabinet size and clearance	The minimum cabinet size for accommodating a QFX3600 device is 28 in. (71.1 cm) deep. Large cabinets improve airflow and reduce the chance of overheating.
Cabinet airflow requirements	When you mount the device in a cabinet, ensure that ventilation through the cabinet is sufficient to prevent overheating. • Ensure that the cool air supply you provide through the cabinet adequately dissipates the thermal output of the device (or devices). • Ensure that the cabinet allows the chassis hot exhaust air to exit the cabinet without recirculating into the device. An open cabinet (without a top or doors) that employs hot air exhaust extraction from the top allows the best airflow through the chassis. If the cabinet contains a top or doors, perforations in these elements assist with removing the hot air exhaust. • The device fans exhaust hot air through the rear of the chassis. Install the device in the cabinet in a way that maximizes the open space on the fan tray side of the chassis. This maximizes the clearance for critical airflow. • Route and dress all cables to minimize the blockage of airflow to and from the chassis. • Ensure that the spacing of rails and adjacent cabinets allows for the proper clearance around the device and cabinet.

Related Documentation

- Clearance Requirements for Airflow and Hardware Maintenance for a QFX3600 or QFX3600-I Device on page 249
- Rack Requirements for a QFX3600 or QFX3600-I Device on page 233
- Mounting a QFX3600 or QFX3600-I Device on Four Posts in a Rack or Cabinet on page 458
- Mounting a QFX3600 or QFX3600-I Device on Two Posts in a Rack or Cabinet on page 455

Cabinet Requirements for a QFX3500 Device

You can mount the QFX3500 device in a cabinet that contains a four-post 19-in. rack as defined in *Cabinets, Racks, Panels, and Associated Equipment* (document number EIA-310-D) published by the Electronics Industry Association.

Cabinet requirements consist of:

- Cabinet size and clearance
- Cabinet airflow requirements

Table 88 on page 243 provides the cabinet requirements and specifications for the QFX3500 device.

 Copyright © 2018, Juniper Networks, Inc.

Table 88: Cabinet Requirements for the QFX3500 Device

Cabinet Requirement	Guidelines
Cabinet size and clearance	The minimum cabinet size for accommodating a QFX3500 device is 36 in. (91.4 cm) deep. Large cabinets improve airflow and reduce the chance of overheating.
Cabinet airflow requirements	When you mount the device in a cabinet, ensure that ventilation through the cabinet is sufficient to prevent overheating. • Ensure that the cool air supply you provide through the cabinet adequately dissipates the thermal output of the device (or devices). • Ensure that the cabinet allows the chassis hot exhaust air to exit the cabinet without recirculating into the device. An open cabinet (without a top or doors) that employs hot air exhaust extraction from the top allows the best airflow through the chassis. If the cabinet contains a top or doors, perforations in these elements assist with removing the hot air exhaust. • The device fans exhaust hot air through the rear of the chassis. Install the device in the cabinet in a way that maximizes the open space on the fan tray side of the chassis. This maximizes the clearance for critical airflow. • Route and dress all cables to minimize the blockage of airflow to and from the chassis. • Ensure that the spacing of rails and adjacent cabinets allows for the proper clearance around the device and cabinet.

Related Documentation

- Clearance Requirements for Airflow and Hardware Maintenance for a QFX3500 Device on page 250
- Rack Requirements for a QFX3500 Device on page 235
- Mounting a QFX3500 Device in a Rack or Cabinet on page 475

Cabinet Requirements for EX4300 Switches

You can mount the switch in a cabinet that contains a 19-in. rack.

Cabinet requirements consist of:

- Cabinet size
- Clearance requirements
- Cabinet airflow requirements

Table 89 on page 243 provides the cabinet requirements and specifications for the switch.

Table 89: Cabinet Requirements and Specifications for the Switch

Cabinet Requirement	Guidelines
Cabinet size	• You can mount the switch in a cabinet that contains a 19-in. rack as defined in *Cabinets, Racks, Panels, and Associated Equipment* (document number EIA-310–D) published by the Electronics Industry Association (http://www.ecianow.org/standards-practices/standards/). • The minimum cabinet size must be able to accommodate the maximum external dimensions of the switch.

Table 89: Cabinet Requirements and Specifications for the Switch (continued)

Cabinet Requirement	Guidelines
Cabinet clearance	• The outer edges of the mounting brackets extend the width of the chassis to 19 in. (48.2 cm). • The minimum total clearance inside the cabinet is 30 in. (76.2 cm) between the inside of the front door and the inside of the rear door.
Cabinet airflow requirements	When you mount the switch in a cabinet, ensure that ventilation through the cabinet is sufficient to prevent overheating. • Ensure adequate cool air supply to dissipate the thermal output of the switch or switches. • Ensure that the hot air exhaust of the chassis exits the cabinet without recirculating into the switch. An open cabinet (without a top or doors) that employs hot air exhaust extraction from the top ensures the best airflow through the chassis. If the cabinet contains a top or doors, perforations in these elements assist with removing the hot air exhaust. • Install the switch in the cabinet in a way that maximizes the open space on the side of the chassis that has the hot air exhaust. • Route and dress all cables to minimize the blockage of airflow to and from the chassis. • Ensure that the spacing of rails and adjacent cabinets is such that there is proper clearance around the switch and cabinet. • A cabinet larger than the minimum required provides better airflow and reduces the chance of overheating.

Related Documentation

- Chassis Physical Specifications for EX4300 Switches on page 155
- Clearance Requirements for Airflow and Hardware Maintenance for EX4300 Switches on page 251
- *Mounting an EX4300 Switch*
- Rack-Mounting and Cabinet-Mounting Warnings on page 343

Cabinet Requirements for EX4200 Switches

You can mount the switch in a cabinet that contains a 19-in. rack.

Cabinet requirements consist of:

- Cabinet size
- Clearance requirements
- Cabinet airflow requirements

Table 89 on page 243 provides the cabinet requirements and specifications for the switch.

Copyright © 2018, Juniper Networks, Inc.

Table 90: Cabinet Requirements and Specifications for the Switch

Cabinet Requirement	Guidelines
Cabinet size	• You can mount the switch in a cabinet that contains a 19-in. rack as defined in *Cabinets, Racks, Panels, and Associated Equipment* (document number EIA-310–D) published by the Electronics Industry Association (http://www.ecianow.org/standards-practices/standards/). • The minimum cabinet size must be able to accommodate the maximum external dimensions of the switch.
Cabinet clearance	• The outer edges of the mounting brackets extend the width of the chassis to 19 in. (48.2 cm). • The minimum total clearance inside the cabinet is 30 in. (76.2 cm) between the inside of the front door and the inside of the rear door.
Cabinet airflow requirements	When you mount the switch in a cabinet, ensure that ventilation through the cabinet is sufficient to prevent overheating. • Ensure adequate cool air supply to dissipate the thermal output of the switch or switches. • Ensure that the hot air exhaust of the chassis exits the cabinet without recirculating into the switch. An open cabinet (without a top or doors) that employs hot air exhaust extraction from the top ensures the best airflow through the chassis. If the cabinet contains a top or doors, perforations in these elements assist with removing the hot air exhaust. • Install the switch in the cabinet in a way that maximizes the open space on the side of the chassis that has the hot air exhaust. • Route and dress all cables to minimize the blockage of airflow to and from the chassis. • Ensure that the spacing of rails and adjacent cabinets is such that there is proper clearance around the switch and cabinet. • A cabinet larger than the minimum required provides better airflow and reduces the chance of overheating.

Related Documentation

- Clearance Requirements for Airflow and Hardware Maintenance for EX4200 Switches on page 254
- Rack Requirements for EX4200 Switches on page 237
- *Mounting an EX4200 Switch on Two Posts in a Rack or Cabinet*

Clearance Requirements for Airflow and Hardware Maintenance for a QFX3100 Director Device

When planning the site for installing a QFX3100 Director device, you must allow sufficient clearance around the device.

- Allow at least 6 in. (15.2 cm) of clearance on the side between devices that have fans or blowers installed. Allow 2.8 in. (7 cm) between the side of the chassis and any non-heat-producing surface such as a wall. For the cooling system to function properly, the airflow around the chassis must be unrestricted. Figure 129 on page 246 shows the airflow through the QFX3100 Director device.
- If you are mounting a QFX3100 Director device in a rack or cabinet with other equipment, or if you are placing it on the desktop or floor near other equipment, ensure that the exhaust from other equipment does not blow into the intake vents of the chassis.

Copyright © 2018, Juniper Networks, Inc.

- Leave at least 24 in. (61 cm) both in front of and behind the QFX3100 Director device. For service personnel to remove and install hardware components, you must leave adequate space at the front and back of the QFX3100 Director device. NEBS GR-63 recommends that you allow at least 30 in. (76.2 cm) in front of the rack or cabinet and 24 in. (61 cm) behind the rack or cabinet.

Figure 129: Airflow Through the QFX3100 Director Device

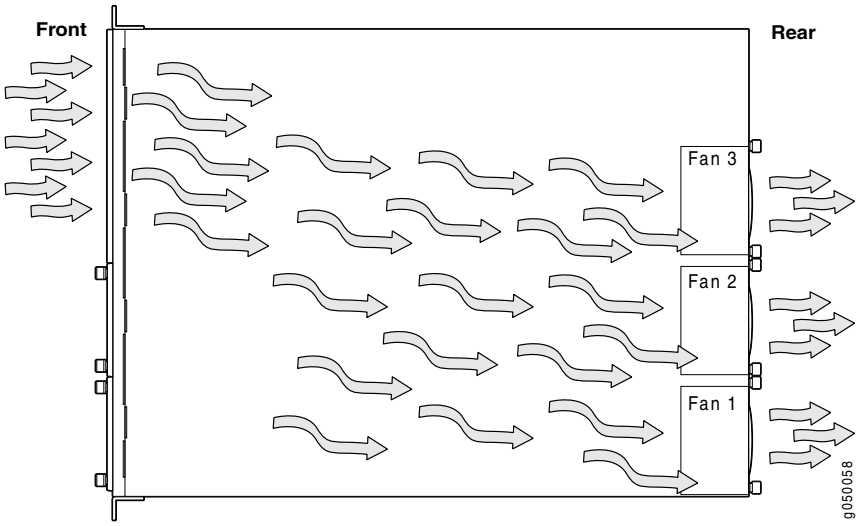

Related Documentation

- Cooling System and Airflow in a QFX3100 Director Device on page 31

Clearance Requirements for Airflow and Hardware Maintenance for a QFX3008-I Interconnect Device

When planning the site for installing a QFX3008-I Interconnect device, you must allow sufficient clearance around the device.

Follow these clearance requirements:

- For the cooling system to function properly, the airflow around the chassis must be unrestricted. Do not block the air intake or exhaust areas shown in Figure 130 on page 247 and Figure 131 on page 247.

  The air intake to cool the front card cage and powerhouse is located below the front fan tray on the chassis. Hot air exhausts from the powerhouse at the bottom of the chassis, and above the rear fan tray at the top of the chassis.

Copyright © 2018, Juniper Networks, Inc.

Figure 130: Airflow Through the Front Card Cage and Powerhouse

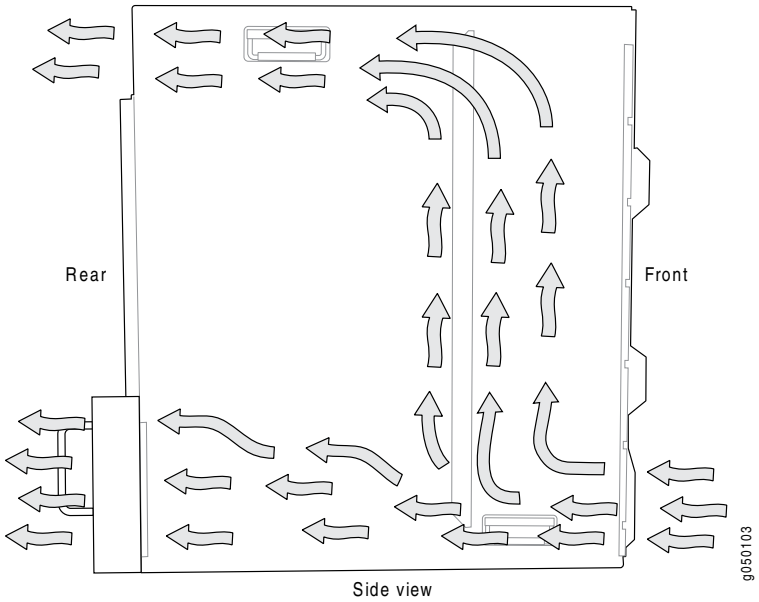

The air intake to cool the rear card cage is located on the front sides of the chassis. Cool air is pulled in through the side fan trays. Hot air exhausts from the Control Boards and rear cards.

Figure 131: Airflow Through the Rear Card Cage

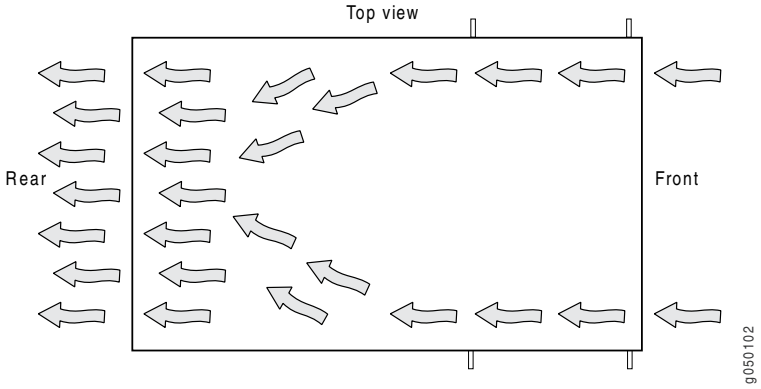

- If you are mounting the device on a rack or cabinet along with other equipment, ensure that the exhaust from other equipment does not blow into the intake vents of the chassis.
- Leave at least 24 in. (61 cm) both in front of and behind the switch. Allow at least 6 in. (15.2 cm) of clearance on each side of the chassis. Leave adequate space at the front of the switch for service personnel to remove and install hardware components. NEBS GR-63 recommends that you allow at least 30 in. (76.2 cm) in front of the rack or cabinet and 24 in. (61 cm) behind the rack or cabinet. See Figure 132 on page 248.

Figure 132: Clearance Requirements for Airflow and Hardware Maintenance for a QFX3008-I Interconnect Device

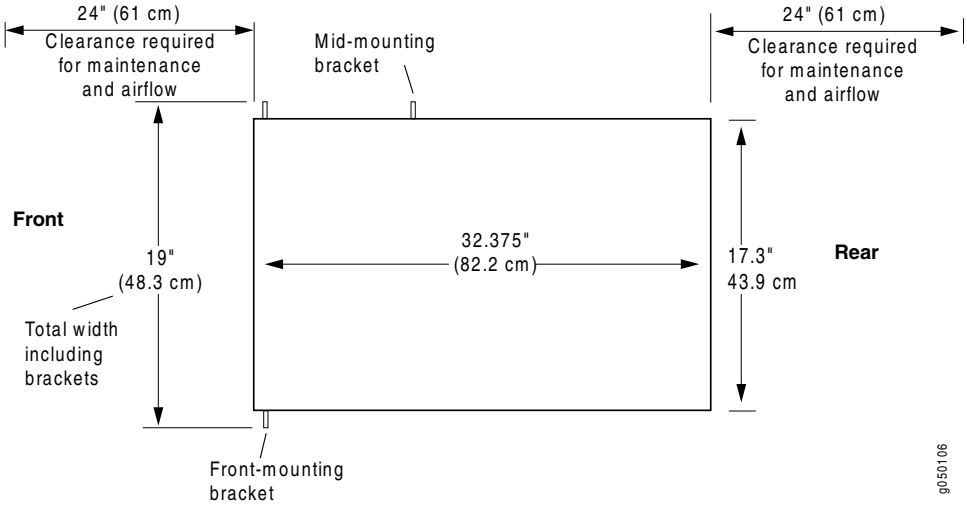

Related Documentation

- Cooling System and Airflow in a QFX3008-I Interconnect Device on page 48
- Cabinet Requirements for a QFX3008-I Interconnect Device on page 239
- Rack Requirements for a QFX3008-I Interconnect Device on page 231
- Rack-Mounting and Cabinet-Mounting Warnings on page 343

Clearance Requirements for Airflow and Hardware Maintenance for a QFX5100 Device

When planning the site for installing a QFX5100 device, you must allow sufficient clearance around the installed chassis (see Figure 133 on page 248).

Figure 133: Clearance Requirements for Airflow and Hardware Maintenance for a QFX5100 Device

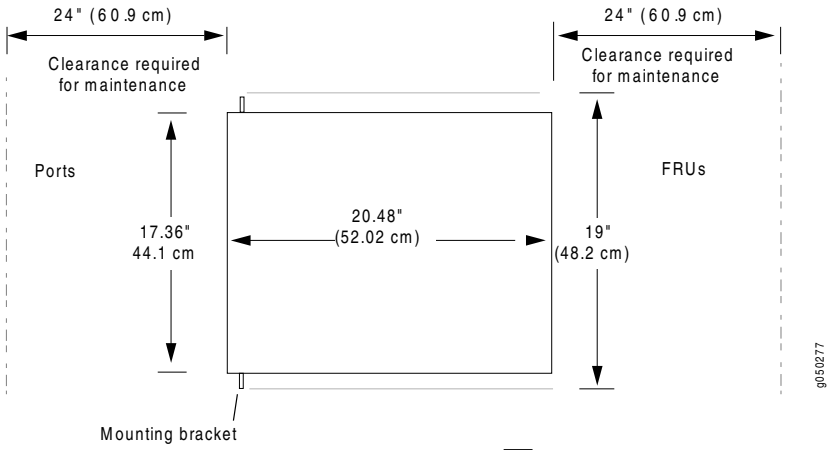

Copyright © 2018, Juniper Networks, Inc.

- For the cooling system to function properly, the airflow around the chassis must be unrestricted. See "Cooling System and Airflow in a QFX5100 Device" on page 88 for more information about the airflow through the chassis.
- If you are mounting a QFX5100 device in a rack or cabinet with other equipment, ensure that the exhaust from other equipment does not blow into the intake vents of the chassis.
- Leave at least 24 in. (61 cm) both in front of and behind the QFX5100 device. For service personnel to remove and install hardware components, you must leave adequate space at the front and back of the switch. NEBS GR-63 recommends that you allow at least 30 in. (76.2 cm) in front of the rack or cabinet and 24 in. (61 cm) behind the rack or cabinet.

Related Documentation

- Rack Requirements for a QFX5100 Device on page 232
- Cabinet Requirements for a QFX5100 Device on page 240
- General Site Guidelines on page 217
- Rack-Mounting and Cabinet-Mounting Warnings on page 343

Clearance Requirements for Airflow and Hardware Maintenance for a QFX3600 or QFX3600-I Device

When planning the site for installing a QFX3600 or QFX3600-I device, you must allow sufficient clearance around the installed device (see Figure 134 on page 249).

Figure 134: Clearance Requirements for Airflow and Hardware Maintenance for a QFX3600 or QFX3600-I Device

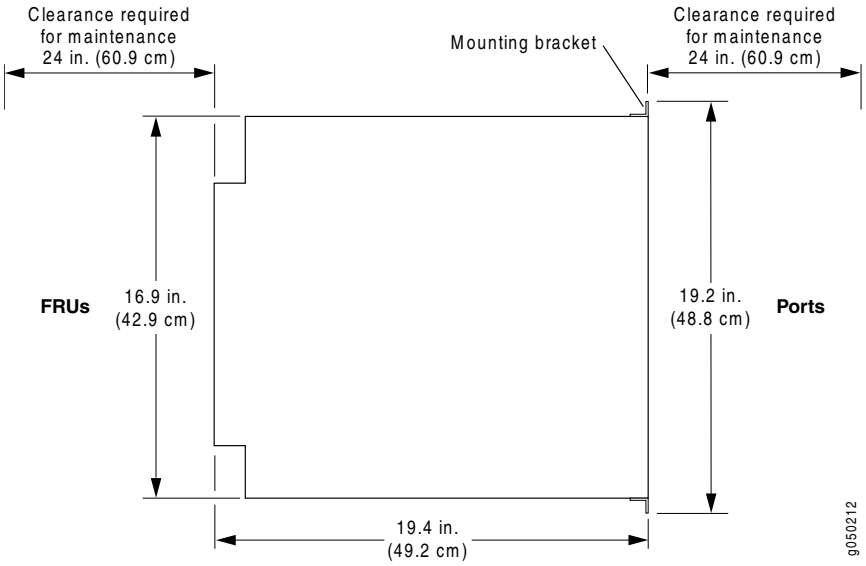

- For the cooling system to function properly, the airflow around the chassis must be unrestricted. See "Cooling System and Airflow for QFX3600 and QFX3600-I Devices" on page 107 for more information about the airflow through the chassis.

- If you are mounting a QFX3600 or QFX3600-I device in a rack or cabinet with other equipment, ensure that the exhaust from other equipment does not blow into the intake vents of the chassis.
- Leave at least 24 in. (61 cm) both in front of and behind the QFX3600 or QFX3600-I device. For service personnel to remove and install hardware components, you must leave adequate space at the front and back of the device. NEBS GR-63 recommends that you allow at least 30 in. (76.2 cm) in front of the rack or cabinet and 24 in. (61 cm) behind the rack or cabinet.

Related Documentation

- Rack Requirements for a QFX3600 or QFX3600-I Device on page 233
- Cabinet Requirements for a QFX3600 or QFX3600-I Device on page 241
- General Site Guidelines on page 217
- Rack-Mounting and Cabinet-Mounting Warnings on page 343

Clearance Requirements for Airflow and Hardware Maintenance for a QFX3500 Device

When planning the site for installing a QFX3500 device, you must allow sufficient clearance around the installed chassis (see Figure 135 on page 250).

Figure 135: Clearance Requirements for Airflow and Hardware Maintenance for a QFX3500 Device

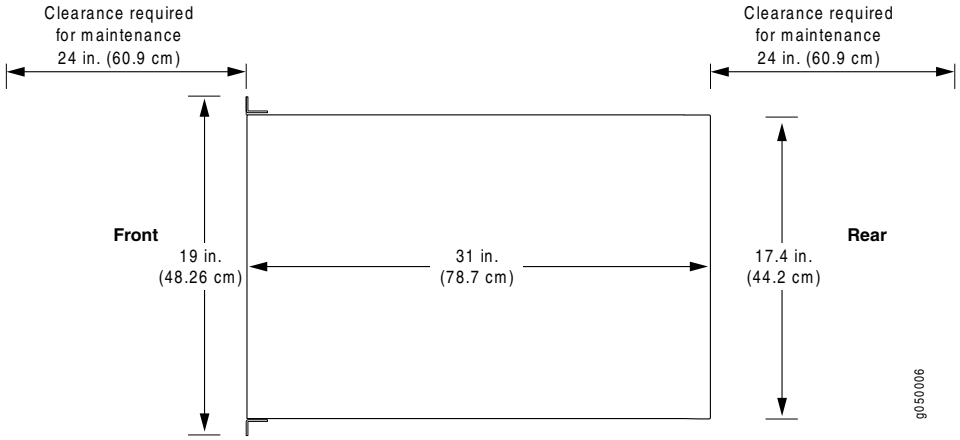

- For the cooling system to function properly, the airflow around the chassis must be unrestricted. See "Cooling System and Airflow for a QFX3500 Device" on page 124 for more information about the airflow through the chassis.
- If you are mounting a QFX3500 device in a rack or cabinet with other equipment, ensure that the exhaust from other equipment does not blow into the intake vents of the chassis.
- Leave at least 24 in. (61 cm) both in front of and behind the QFX3500 device. For service personnel to remove and install hardware components, you must leave adequate space at the front and back of the device. NEBS GR-63 recommends that you allow

 Copyright © 2018, Juniper Networks, Inc.

at least 30 in. (76.2 cm) in front of the rack or cabinet and 24 in. (61 cm) behind the rack or cabinet.

Related Documentation

- Rack Requirements for a QFX3500 Device on page 235
- Cabinet Requirements for a QFX3500 Device on page 242
- General Site Guidelines on page 217
- Rack-Mounting and Cabinet-Mounting Warnings on page 343

Clearance Requirements for Airflow and Hardware Maintenance for EX4300 Switches

When planning the site for installing an EX4300 switch, you must ensure sufficient clearance around the switch.

Follow these clearance requirements:

- For the cooling system to function properly, the airflow around the chassis must be unrestricted. See Figure 136 on page 252, Figure 137 on page 252, Figure 138 on page 252, and Figure 139 on page 253 for reference.

Figure 136: Front-to-Back Airflow on 24-Port and 48-Port EX4300 Switches Except EX4300-48MP and EX4300-48MP-S Switches

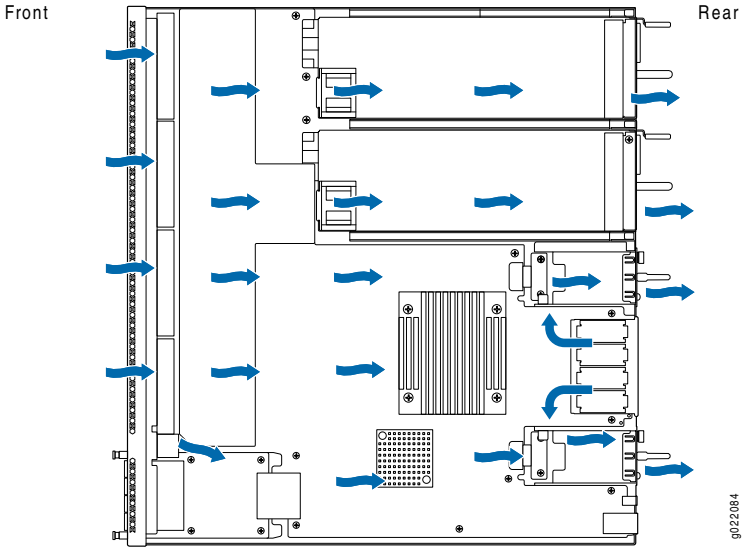

Figure 137: Front -to-Back Airflow on EX4300-48MP and EX4300-48MP-S Switches

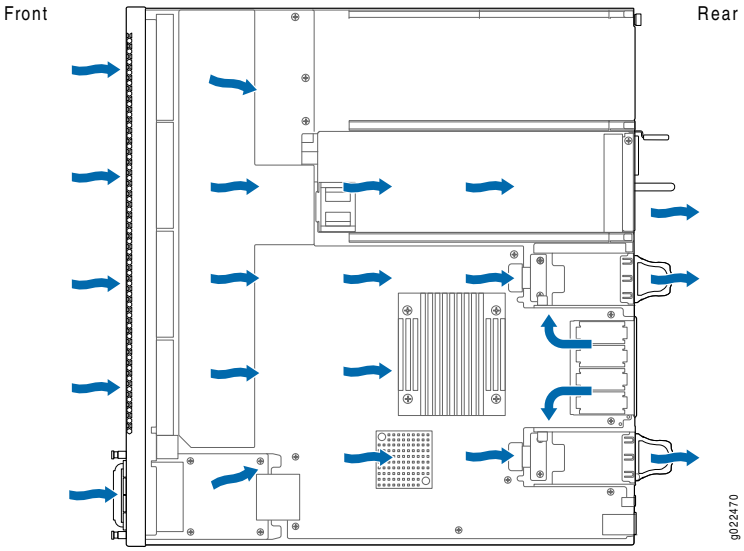

Figure 138: Front-to-Back Airflow on 32-Port EX4300 Switches

Copyright © 2018, Juniper Networks, Inc.

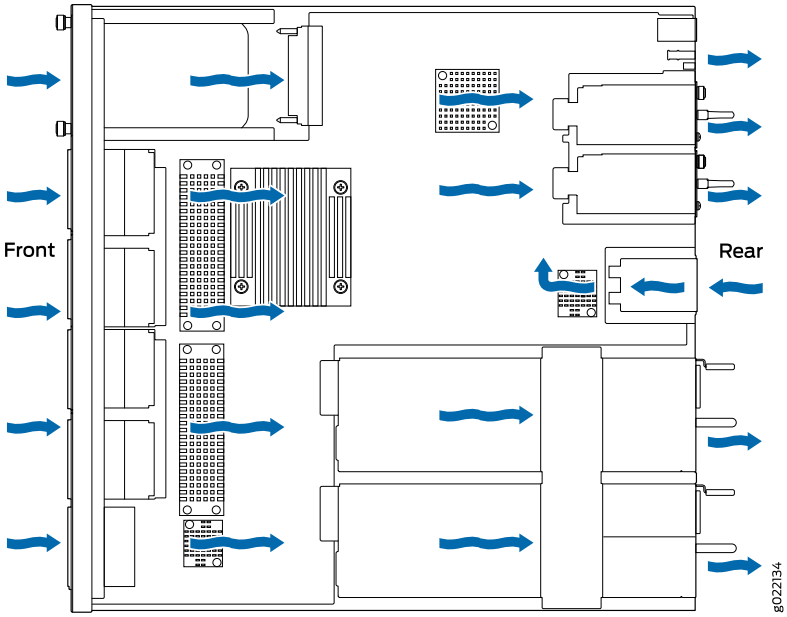

Figure 139: Back-to-Front Airflow on 24-Port and 48-Port EX4300 Switches

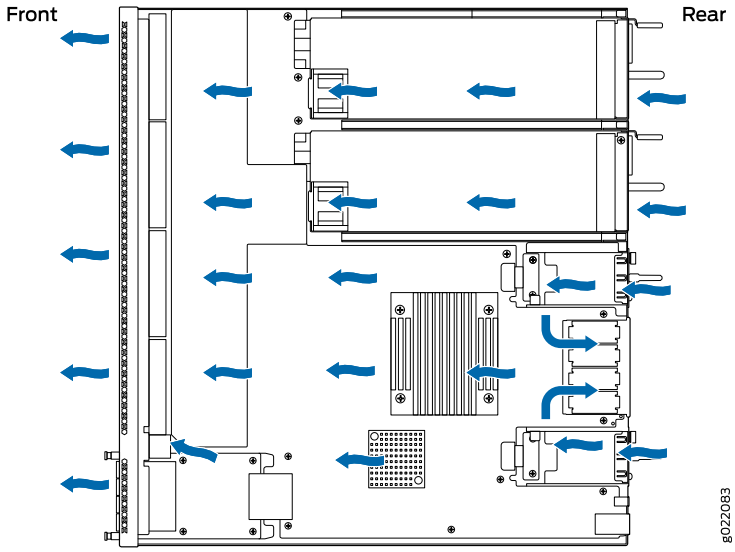

- If you are mounting the switch on a rack or cabinet along with other equipment, ensure that the exhaust from other equipment does not blow into the intake vents of the chassis.
- Leave at least 6 in. (15.2 cm) clearance in front of and behind the chassis for airflow.
- Leave at least 6 in. (15.2 cm) clearance on the left of the chassis for installing the grounding lug.
- Leave at least 24 in. (61 cm) clearance in front of and behind the switch for service personnel to remove and install hardware components. See Figure 140 on page 254 and Figure 141 on page 254.

Figure 140: Clearance Requirements for Airflow and Hardware Maintenance for an EX4300 Switch Chassis Except EX4300-48MP and EX4300-48MP-S Switches

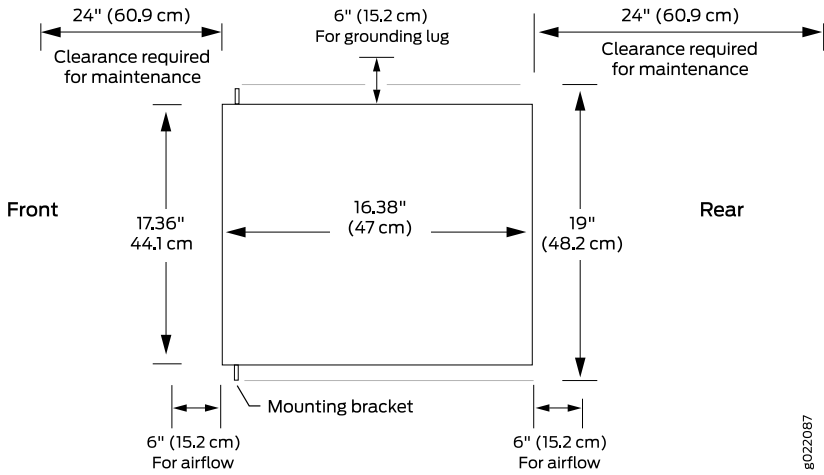

Figure 141: Clearance Requirements for Airflow and Hardware Maintenance for an EX4300-48MP and EX4300-48MP-S Switch Chassis

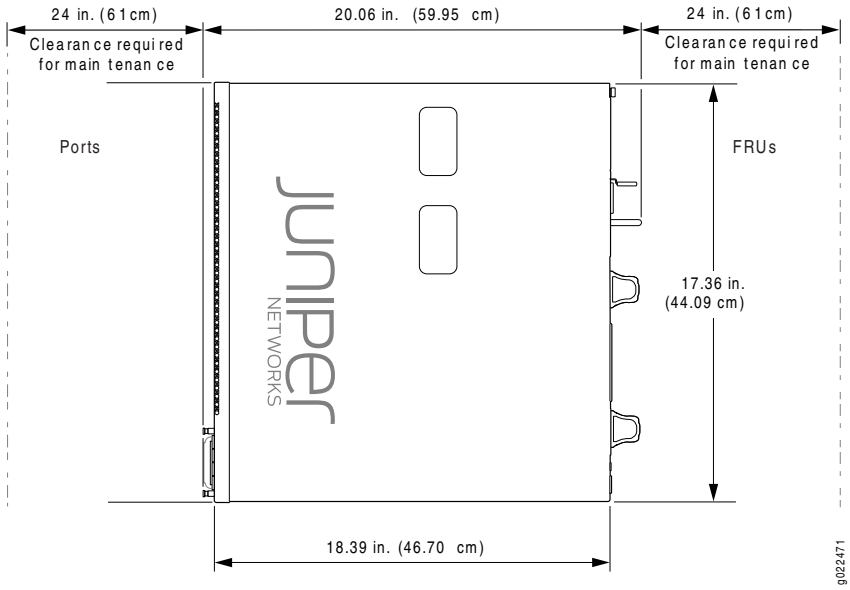

Related Documentation

- General Site Guidelines on page 217

Clearance Requirements for Airflow and Hardware Maintenance for EX4200 Switches

When planning the site for installing an EX4200 switch, you must allow sufficient clearance around the installed switch (see Figure 142 on page 255).

Copyright © 2018, Juniper Networks, Inc.

Figure 142: Clearance Requirements for Airflow and Hardware Maintenance for EX4200 Switches

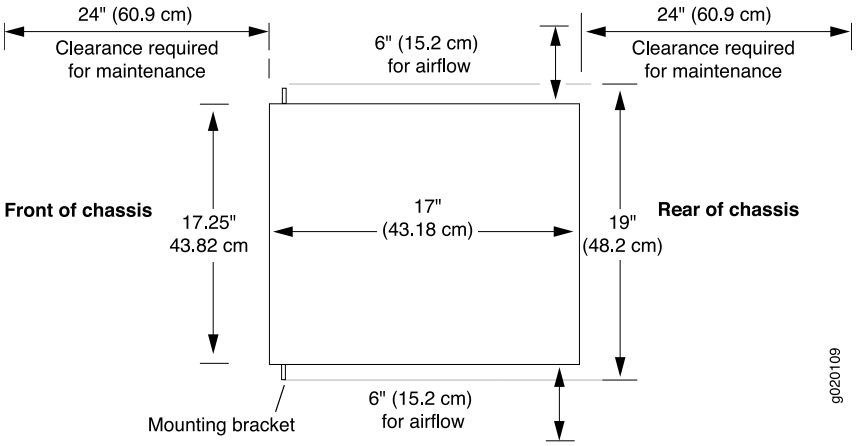

Figure 143: Airflow Through the EX4200 Switch Chassis

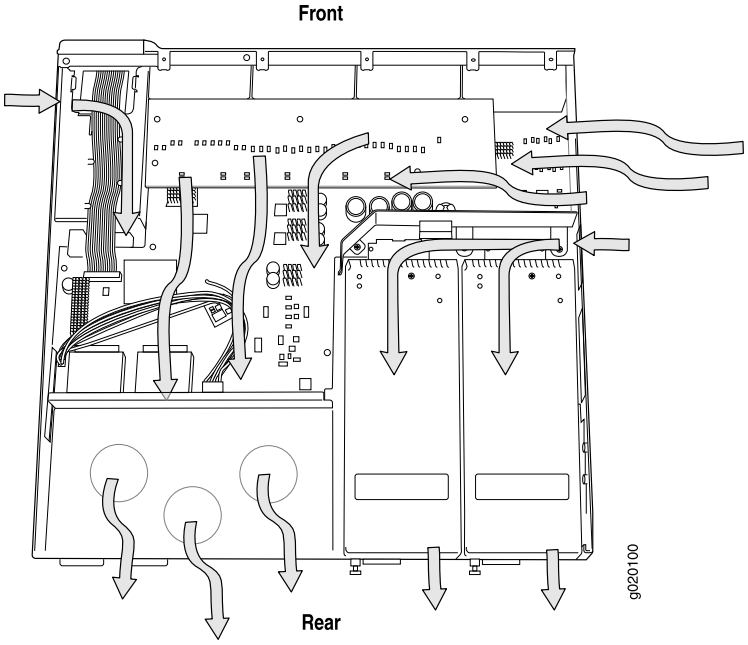

- Allow at least 6 in. (15.2 cm) of clearance on the side between devices that have fans or blowers installed. Allow 2.8 in. (7 cm) between the side of the chassis and any non-heat-producing surface such as a wall.
- If you are mounting the switch on a rack or cabinet with other equipment, or if you are placing it on the desktop or floor near other equipment, ensure that the exhaust from other equipment does not blow into the intake vents of the chassis.
- Leave at least 24 in. (61 cm) both in front of and behind the switch. For service personnel to remove and install hardware components, you must leave adequate space at the front and back of the switch. NEBS GR-63 recommends at least 30 in. (76.2 cm) in front of the rack or cabinet and 24 in. (61 cm) behind the rack or cabinet.

Copyright © 2018, Juniper Networks, Inc.

Related Documentation

- *Rack Requirements*
- *Cabinet Requirements*
- General Site Guidelines on page 217
- Rack-Mounting and Cabinet-Mounting Warnings on page 343
- Cooling System and Airflow in an EX4200 Switch on page 187

Copyright © 2018, Juniper Networks, Inc.

CHAPTER 11

Port and Interface Specifications

- USB Port Specifications for the QFX Series on page 257
- USB Port Specifications for an EX Series Switch on page 258
- Determining Transceiver Support for QFabric Systems on page 258
- Console Port Connector Pinout Information on page 259
- Management Port Connector Pinouts for the QFX Series on page 260
- RJ-45 Management Port Connector Pinout Information on page 261
- Management Port Connector Pinout Information for an EX4200 Switch on page 261
- Network Module Port Connector Pinouts for a QFX3100 Director Device on page 262

USB Port Specifications for the QFX Series

The following Juniper Networks USB flash drives have been tested and are officially supported for the USB port in the QFX Series:

- RE-USB-1G-S—1-gigabyte (GB) USB flash drive (except QFX3100 Director device)
- RE-USB-2G-S—2-GB USB flash drive (except QFX3100 Director device)
- RE-USB-4G-S—4-GB USB flash drive

CAUTION: Any USB memory product not listed as supported for the QFX Series has not been tested by Juniper Networks. The use of any unsupported USB memory product could expose your device to unpredictable behavior. Juniper Networks Technical Assistance Center (JTAC) can provide only limited support for issues related to unsupported hardware. We strongly recommend that you use only supported USB flash drives.

CAUTION: Remove the USB flash drive before upgrading Junos OS or rebooting a QFX Series device. Failure to do so could expose your device to unpredictable behavior.

NOTE: Executing the **request system snapshot** CLI command on a QFX3500 device requires an external USB flash drive with at least 4 GB of free space. We recommend using the RE-USB-4G-S flash drive.

NOTE: USB flash drives used with the QFX Series device must support USB 2.0 or later.

USB Port Specifications for an EX Series Switch

The following Juniper Networks USB flash drives have been tested and are officially supported for the USB port on all EX Series switches:

- RE-USB-1G-S
- RE-USB-2G-S
- RE-USB-4G-S

CAUTION: Any USB memory product not listed as supported for EX Series switches has not been tested by Juniper Networks. The use of any unsupported USB memory product could expose your EX Series switch to unpredictable behavior. Juniper Networks Technical Assistance Center (JTAC) can provide only limited support for issues related to unsupported hardware. We strongly recommend that you use only supported USB flash drives.

All USB flash drives used on EX Series switches must have the following features:

- USB 2.0 or later.
- Formatted with a FAT or MS-DOS file system.
- If the switch is running Junos OS Release 9.5 or earlier, the formatting method must use a master boot record. Microsoft Windows formatting, by default, does not use a master boot record. See the documentation for your USB flash drive for information about how your USB flash drive is formatted.

Related Documentation

- *Booting an EX Series Switch Using a Software Package Stored on a USB Flash Drive*

Determining Transceiver Support for QFabric Systems

You can find information about the optical transceivers supported on your Juniper device by using the Hardware Compatibility Tool. In addition to transceiver and connection type, the optical and cable characteristics—where applicable—are documented for each transceiver. The Hardware Compatibility Tool enables you to search by product, displaying all the transceivers supported on that device, or category, by interface speed or type. The

Copyright © 2018, Juniper Networks, Inc.

list of supported transceivers for QFabric Systems is located at https://pathfinder.juniper.net/hct/product/.

CAUTION: If you face a problem running a Juniper Networks device that uses a third-party optic or cable, the Juniper Networks Technical Assistance Center (JTAC) can help you diagnose the source of the problem. Your JTAC engineer might recommend that you check the third-party optic or cable and potentially replace it with an equivalent Juniper Networks optic or cable that is qualified for the device.

Related Documentation

- Front Panel of a QFX3100 Director Device on page 30
- Rear Cards in a QFX3008-I Interconnect Device on page 55
- Port Panel of QFX5100-48S and QFX5100-48SH Devices on page 77
- Port Panel of QFX5100-48T and QFX5100-48TH Devices on page 79
- Port Panel of a QFX5100-24Q Device on page 81
- Front Panel of a QFX3600 Device on page 104
- Front Panel of a QFX3500 Device on page 122

Console Port Connector Pinout Information

The console port on a Juniper Networks device is an RS-232 serial interface that uses an RJ-45 connector to connect to a console management device. The default baud rate for the console port is 9600 baud.

Table 91 on page 259 provides the pinout information for the RJ-45 console connector.

NOTE: If your laptop or PC does not have a DB-9 male connector pin and you want to connect your laptop or PC directly to a device, use a combination of the RJ-45 to DB-9 female adapter and a USB to DB-9 male adapter. You must provide the USB to DB-9 male adapter.

Table 91: Console Port Connector Pinout Information

Pin	Signal	Description
1	RTS Output	Request to send
2	DTR Output	Data terminal ready
3	TxD Output	Transmit data
4	Signal Ground	Signal ground

Table 91: Console Port Connector Pinout Information (continued)

Pin	Signal	Description
5	Signal Ground	Signal ground
6	RxD Input	Receive data
7	CD Input	Data carrier detect
8	CTS Input	Clear to send

Related Documentation

- *Connecting a Device to a Management Console by Using an RJ-45 Connector*
- *Configuring Junos OS to Set Console and Auxiliary Port Properties*
- *Configuring Console and Auxiliary Port Properties*

Management Port Connector Pinouts for the QFX Series

The 1000BASE-T RJ-45 management ports use an RJ-45 connector to connect either to the control plane and management network in a QFabric system, or to a management device for out-of-band management.

Table 92 on page 260 provides the pinout information of the RJ-45 management port connector. An RJ-45 cable is supplied with the QFX Series device.

NOTE: The RJ-45 pinout information in Table 92 on page 260 also applies to the QFX5100-48T device 10GBASE-T access ports.

Table 92: RJ-45 Management Port Connector Pinouts for the QFX Series

Pin	Signal	Description
1	TRP1+	Transmit/receive data pair 1
2	TRP1–	Transmit/receive data pair 1
3	TRP2+	Transmit/receive data pair 2
4	TRP3+	Transmit/receive data pair 3
5	TRP3–	Transmit/receive data pair 3
6	TRP2–	Transmit/receive data pair 2
7	TRP4+	Transmit/receive data pair 4
8	TRP4–	Transmit/receive data pair 4

Copyright © 2018, Juniper Networks, Inc.

Related Documentation

- Management Port LEDs on a QFX3100 Director Device on page 722
- Management Port LEDs in the QFX3600 and QFX3600-I Device on page 750
- Management Port LEDs on a QFX3500 Device on page 758
- Management Port LEDs on a QFX5100 Device on page 739
- *QFX10002 Management Port LEDs*
- *QFX10000 Control Board LEDs*
- *QFX5200 Management Port LEDs*
- *QFX5110 Management Port LEDs*

RJ-45 Management Port Connector Pinout Information

Table 93 on page 261 provides the pinout information for the RJ-45 connector for the management port on Juniper Networks devices.

Table 93: RJ-45 Management Port Connector Pinout Information

Pin	Signal	Description
1	TRP1+	Transmit/receive data pair 1
2	TRP1-	Transmit/receive data pair 1
3	TRP2+	Transmit/receive data pair 2
4	TRP3+	Transmit/receive data pair 3
5	TRP3-	Transmit/receive data pair 3
6	TRP2-	Transmit/receive data pair 2
7	TRP4+	Transmit/receive data pair 4
8	TRP4-	Transmit/receive data pair 4

Management Port Connector Pinout Information for an EX4200 Switch

The management port on the switch uses an RJ-45 connector to connect to a management device for out-of-band management.

The port uses an autosensing RJ-45 connector to support a 10/100/1000Base-T connection. Two LEDs on the port indicate link/activity on the port and the administrative status of the port. See *Management Port LEDs in EX3200 Switches* and "Management Port LEDs in EX4200 Switches" on page 807.

Table 92 on page 260 provides the pinout information for the RJ-45 connector. An RJ-45 cable, with a connector attached, is supplied with the switch.

Table 94: Management Port Connector Pinout Information

Pin	Signal	Description
1	TRP1+	Transmit/receive data pair 1
2	TRP1-	Transmit/receive data pair 1
3	TRP2+	Transmit/receive data pair 2
4	TRP3+	Transmit/receive data pair 3
5	TRP3-	Transmit/receive data pair 3
6	TRP2-	Transmit/receive data pair 2
7	TRP4+	Transmit/receive data pair 4
8	TRP4-	Transmit/receive data pair 4

Related Documentation

- See *Rear Panel of an EX4200 Switch* for port location.
- *Connecting a Device to a Network for Out-of-Band Management*

Network Module Port Connector Pinouts for a QFX3100 Director Device

The 1000BASE-T RJ-45 ports on each network module use an RJ-45 connector connect to the control plane and management network in a QFabric system.

Table 95 on page 262 provides the pinout information for the RJ-45 network module connector.

Table 95: Network Module Port Connector Pinout Information for a QFX3100 Director Device

Pin	Signal	Description
1	TRP1+	Transmit/receive data pair 1
2	TRP1–	Transmit/receive data pair 1
3	TRP2+	Transmit/receive data pair 2
4	TRP3+	Transmit/receive data pair 3
5	TRP3–	Transmit/receive data pair 3
6	TRP2–	Transmit/receive data pair 2
7	TRP4+	Transmit/receive data pair 4

Copyright © 2018, Juniper Networks, Inc.

Table 95: Network Module Port Connector Pinout Information for a QFX3100 Director Device (continued)

Pin	Signal	Description
8	TRP4–	Transmit/receive data pair 4

Related Documentation

- Network Module Port LEDs on a QFX3100 Director Device on page 723

Copyright © 2018, Juniper Networks, Inc.

CHAPTER 12

Cable Specifications

- Cable Specifications for Copper-Based Control Plane Connections for the QFabric System on page 265
- Cable Specifications for QSFP+ and QSFP28 Transceivers on page 266
- Cable Specifications for Console and Management Connections for the QFX Series on page 268
- Understanding QFX Series Fiber-Optic Cable Signal Loss, Attenuation, and Dispersion on page 269
- Understanding EX Series Switches Fiber-Optic Cable Signal Loss, Attenuation, and Dispersion on page 270
- Calculating the Fiber-Optic Cable Power Budget for a QFX Series Device on page 271
- Calculating the Fiber-Optic Cable Power Margin for a QFX Series Device on page 272
- Calculating the EX Series Switch Fiber-Optic Cable Power Budget on page 274
- Calculating the EX Series Switch Fiber-Optic Cable Power Margin on page 274

Cable Specifications for Copper-Based Control Plane Connections for the QFabric System

QFX Series devices support using RJ-45 patch cables to interconnect the copper-based QFabric system control plane. The RJ-45 patch cables connect to 1000BASE-T ports on the network modules in the QFX3100 Director device and the management ports in the QFX3500 Node device, QFX3600 Node device, and QFX3600-I Interconnect device.

QFX5100 Node devices and the QFX5100-24Q Interconnect devices connect using a 1000BASE-T port **C1** and a 1000BASE-T SFP module (Juniper model number QFX-SFP-1GE-T) installed in the the SFP management Ethernet cage **C0**. Some QFX5100 SKUs have an additional SFP management port (second **C0**).

In the QFX3008-I Interconnect device Control Board, the RJ-45 patch cables are used with 1000BASE-T SFP modules (Juniper model number QFX-SFP-1GE-T) installed in the SFP+ ports.

NOTE: For information about the QFX-SFP-1GE-T SFP module, see the Hardware Compatibility Tool.

Table 96 on page 266 lists the specifications for the cables that connect the QFabric system control plane.

Table 96: Cable Specifications for Copper-Based Control Plane Connections for the QFabric System

Port on QFX Series Device	Cable Specification	Maximum Length	Device Receptacle
• QFX3100 Director device network module ports • QFX3008-I Interconnect device Control Board management ports (with 1000BASE-T SFP module) • QFX3600-I Interconnect device management (**C0** and **C1**) ports • QFX5100 Interconnect device management **C0** and **C1** (with 1000BASE-T SFP module) • QFX3600 Node device management (**C0** and **C1**) ports • QFX3500 Node device management (**C0** and **C1**) ports • QFX5100 Node device management **C0** and **C1** (with 1000BASE-T SFP module)	Category 5 cable or equivalent suitable for 1000BASE-T operation with RJ-45 connectors	328 feet (100 meters)	RJ-45

Related Documentation

- Connecting QFX3100 Director Devices to a Copper-Based QFX3000-G QFabric System Control Plane Network on page 502
- *Connecting QFX3100 Director Devices to a Copper-Based QFX3000-M QFabric System Control Plane Network*
- *Connecting a QFX3600-I Interconnect Device to a Copper-Based QFX3000-M QFabric System Control Plane Network*
- Connecting a QFX3500 Node Device to a Copper-Based QFX3000-G QFabric System Control Plane Network on page 515
- Connecting a QFX3600 Node Device to a Copper-Based QFX3000-G QFabric System Control Plane Network on page 512
- *Connecting a QFX3500 Node Device to a Copper-Based QFX3000-M QFabric System Control Plane Network*
- *Connecting a QFX3600 Node Device to a Copper-Based QFX3000-M QFabric System Control Plane Network*
- Connecting a QFX5100 Node Device to a Copper-Based QFX3000-G QFabric System Control Plane Network on page 510
- *Connecting a QFX5100 Node Device to a QFX3600-I Interconnect Device*

Cable Specifications for QSFP+ and QSFP28 Transceivers

The 40-Gigabit Ethernet QSFP+ and 100-Gigabit Ethernet QSFP28 transceivers that are used in QFX Series and EX4600 switches use 12-ribbon multimode fiber crossover cables with female MPO/UPC connectors. The fiber can be either OM3 or OM4. These cables are not sold by Juniper Networks.

 Copyright © 2018, Juniper Networks, Inc.

CAUTION: To maintain agency approvals, use only a properly constructed, shielded cable.

TIP: Ensure that you order cables with the correct polarity. Vendors refer to these crossover cables as *key up to key up*, *latch up to latch up*, *Type B*, or *Method B*. If you are using patch panels between two QSFP+ or QSFP28 transceivers, ensure that the proper polarity is maintained through the cable plant.

Table 97 on page 267 describes the signals on each fiber. Table 98 on page 267 shows the pin-to-pin connections for proper polarity.

Table 97: QSFP+ and QSFP28 Optical Module Receptacle Pinouts

Fiber	Signal
1	Tx0 (Transmit)
2	Tx1 (Transmit)
3	Tx2 (Transmit)
4	Tx3 (Transmit)
5	Unused
6	Unused
7	Unused
8	Unused
9	Rx3 (Receive)
10	Rx2 (Receive)
11	Rx1 (Receive)
12	Rx0 (Receive)

Table 98: QSFP+ MPO Fiber-Optic Crossover Cable Pinouts

Pin	Pin
1	12
2	11

Copyright © 2018, Juniper Networks, Inc.

Table 98: QSFP+ MPO Fiber-Optic Crossover Cable Pinouts (continued)

Pin	Pin
3	10
4	9
5	8
6	7
7	6
8	5
9	4
10	3
11	2
12	1

Cable Specifications for Console and Management Connections for the QFX Series

Table 99 on page 268 lists the specifications for the cables that connect the QFX Series to a management device.

NOTE: The QFX Series can be configured with SFP management ports that support 1000BASE-SX transceivers. See The Hardware Compatibility Tool for more on the fiber-optic cables required for use with these transceivers.

Table 99: Cable Specifications for Console and Management Connections for the QFX Series

Port on QFX Series Device	Cable Specification	Cable Supplied	Maximum Length	Device Receptacle
Console port	RS-232 (EIA-232) serial cable	One 7-foot (2.13-meter) long RJ-45 patch cable and RJ-45 to DB-9 adapter	7 feet (2.13 meters)	RJ-45
Management port	Category 5 cable or equivalent suitable for 1000BASE-T operation	One 7-foot (2.13-meter) long RJ-45 patch cable	328 feet (100 meters)	RJ-45

Copyright © 2018, Juniper Networks, Inc.

Understanding QFX Series Fiber-Optic Cable Signal Loss, Attenuation, and Dispersion

To determine the power budget and power margin needed for fiber-optic connections, you need to understand how signal loss, attenuation, and dispersion affect transmission. The QFX Series uses various types of network cables, including multimode and single-mode fiber-optic cables.

- Signal Loss in Multimode and Single-Mode Fiber-Optic Cables on page 269
- Attenuation and Dispersion in Fiber-Optic Cable on page 269

Signal Loss in Multimode and Single-Mode Fiber-Optic Cables

Multimode fiber is large enough in diameter to allow rays of light to reflect internally (bounce off the walls of the fiber). Interfaces with multimode optics typically use LEDs as light sources. However, LEDs are not coherent light sources. They spray varying wavelengths of light into the multimode fiber, which reflect the light at different angles. Light rays travel in jagged lines through a multimode fiber, causing signal dispersion. When light traveling in the fiber core radiates into the fiber cladding (layers of lower refractive index material in close contact with a core material of higher refractive index), higher-order mode loss occurs. Together, these factors reduce the transmission distance of multimode fiber compared to that of single-mode fiber.

Single-mode fiber is so small in diameter that rays of light reflect internally through one layer only. Interfaces with single-mode optics use lasers as light sources. Lasers generate a single wavelength of light, which travels in a straight line through the single-mode fiber. Compared to multimode fiber, single-mode fiber has a higher bandwidth and can carry signals for longer distances. It is consequently more expensive.

For information about the maximum transmission distance and supported wavelength range for the types of single-mode and multimode fiber-optic cables that are connected to the QFX Series, see the Hardware Compatibility Tool . Exceeding the maximum transmission distances can result in significant signal loss, which causes unreliable transmission.

Attenuation and Dispersion in Fiber-Optic Cable

An optical data link functions correctly provided that modulated light reaching the receiver has enough power to be demodulated correctly. Attenuation is the reduction in strength of the light signal during transmission. Passive media components such as cables, cable splices, and connectors cause attenuation. Although attenuation is significantly lower for optical fiber than for other media, it still occurs in both multimode and single-mode transmission. An efficient optical data link must transmit enough light to overcome attenuation.

Dispersion is the spreading of the signal over time. The following two types of dispersion can affect signal transmission through an optical data link:

- Chromatic dispersion, which is the spreading of the signal over time caused by the different speeds of light rays.

Copyright © 2018, Juniper Networks, Inc.

- Modal dispersion, which is the spreading of the signal over time caused by the different propagation modes in the fiber.

For multimode transmission, modal dispersion, rather than chromatic dispersion or attenuation, usually limits the maximum bit rate and link length. For single-mode transmission, modal dispersion is not a factor. However, at higher bit rates and over longer distances, chromatic dispersion limits the maximum link length.

An efficient optical data link must have enough light to exceed the minimum power that the receiver requires to operate within its specifications. In addition, the total dispersion must be within the limits specified for the type of link in the Telcordia Technologies document GR-253-CORE (Section 4.3) and International Telecommunications Union (ITU) document G.957.

When chromatic dispersion is at the maximum allowed, its effect can be considered as a power penalty in the power budget. The optical power budget must allow for the sum of component attenuation, power penalties (including those from dispersion), and a safety margin for unexpected losses.

Understanding EX Series Switches Fiber-Optic Cable Signal Loss, Attenuation, and Dispersion

To determine the power budget and power margin needed for fiber-optic connections, you need to understand how signal loss, attenuation, and dispersion affect transmission. EX Series switches use various types of network cable, including multimode and single-mode fiber-optic cable.

- Signal Loss in Multimode and Single-Mode Fiber-Optic Cable on page 270
- Attenuation and Dispersion in Fiber-Optic Cable on page 271

Signal Loss in Multimode and Single-Mode Fiber-Optic Cable

Multimode fiber is large enough in diameter to allow rays of light to reflect internally (bounce off the walls of the fiber). Interfaces with multimode optics typically use LEDs as light sources. However, LEDs are not coherent light sources. They spray varying wavelengths of light into the multimode fiber, which reflects the light at different angles. Light rays travel in jagged lines through a multimode fiber, causing signal dispersion. When light traveling in the fiber core radiates into the fiber cladding (layers of lower refractive index material in close contact with a core material of higher refractive index), higher-order mode loss (HOL) occurs. Together, these factors reduce the transmission distance of multimode fiber compared to that of single-mode fiber.

Single-mode fiber is so small in diameter that rays of light reflect internally through one layer only. Interfaces with single-mode optics use lasers as light sources. Lasers generate a single wavelength of light, which travels in a straight line through the single-mode fiber. Compared to multimode fiber, single-mode fiber has a higher bandwidth and can carry signals for longer distances. It is consequently more expensive.

Exceeding the maximum transmission distances can result in significant signal loss, which causes unreliable transmission.

 Copyright © 2018, Juniper Networks, Inc.

Attenuation and Dispersion in Fiber-Optic Cable

An optical data link functions correctly provided that modulated light reaching the receiver has enough power to be demodulated correctly. *Attenuation* is the reduction in strength of the light signal during transmission. Passive media components such as cables, cable splices, and connectors cause attenuation. Although attenuation is significantly lower for optical fiber than for other media, it still occurs in both multimode and single-mode transmission. An efficient optical data link must transmit enough light to overcome attenuation.

Dispersion is the spreading of the signal over time. The following two types of dispersion can affect signal transmission through an optical data link:

- Chromatic dispersion, which is the spreading of the signal over time caused by the different speeds of light rays.
- Modal dispersion, which is the spreading of the signal over time caused by the different propagation modes in the fiber.

For multimode transmission, modal dispersion, rather than chromatic dispersion or attenuation, usually limits the maximum bit rate and link length. For single-mode transmission, modal dispersion is not a factor. However, at higher bit rates and over longer distances, chromatic dispersion limits the maximum link length.

An efficient optical data link must have enough light to exceed the minimum power that the receiver requires to operate within its specifications. In addition, the total dispersion must be within the limits specified for the type of link in Telcordia Technologies document GR-253-CORE (Section 4.3) and International Telecommunications Union (ITU) document G.957.

When chromatic dispersion is at the maximum allowed, its effect can be considered as a power penalty in the power budget. The optical power budget must allow for the sum of component attenuation, power penalties (including those from dispersion), and a safety margin for unexpected losses.

Calculating the Fiber-Optic Cable Power Budget for a QFX Series Device

Calculate the link's power budget when planning fiber-optic cable layout and distances to ensure that fiber-optic connections have sufficient power for correct operation. The power budget is the maximum amount of power the link can transmit. When you calculate the power budget, you use a worst-case analysis to provide a margin of error, even though all the parts of an actual system do not operate at the worst-case levels.

To calculate the worst-case estimate for the fiber-optic cable power budget (P^B) for the link:

1. Determine values for the link's minimum transmitter power (P_T) and minimum receiver sensitivity (P_R). For example, here, (P_T) and (P_R) are measured in decibels, and decibels are referenced to 1 milliwatt (dBm):

   $P_T = -15$ dBm

P_R = –28 dBm

NOTE: See the specifications for your transmitter and receiver to find the minimum transmitter power and minimum receiver sensitivity.

2. Calculate the power budget (P^B) by subtracting (P_R) from (P_T):

   –15 dBm – (–28 dBm) = 13 dBm

Calculating the Fiber-Optic Cable Power Margin for a QFX Series Device

Calculate the link's power margin when planning fiber-optic cable layout and distances to ensure that fiber-optic connections have sufficient signal power to overcome system losses and still satisfy the minimum input requirements of the receiver for the required performance level. The power margin (P_M) is the amount of power available after attenuation or link loss (LL) has been subtracted from the power budget (P_B).

When you calculate the power margin, you use a worst-case analysis to provide a margin of error, even though all the parts of an actual system do not operate at worst-case levels. A power margin (P_M) greater than zero indicates that the power budget is sufficient to operate the receiver and that it does not exceed the maximum receiver input power. This means the link will work. A (P_M) that is zero or negative indicates insufficient power to operate the receiver. See the specification for your receiver to find the maximum receiver input power.

Before you begin to calculate the power margin:

- Calculate the power budget. See "Calculating the Fiber-Optic Cable Power Budget for a QFX Series Device" on page 271.

To calculate the worst-case estimate for the power margin (P_M) for the link:

1. Determine the maximum value for link loss (LL) by adding estimated values for applicable link-loss factors; for example, use the sample values for various factors as provided in Table 100 on page 272 (here, the link is 2 km long and multimode, and the (P_B) is 13 dBm).

Table 100: Estimated Values for Factors Causing Link Loss

Link-Loss Factor	Estimated Link Loss Value	Sample Link Loss (LL) Calculation Values
Higher-order mode losses	Multimode—0.5 dBm	0.5 dBm
	Single-mode—None	0 dBm

Copyright © 2018, Juniper Networks, Inc.

Table 100: Estimated Values for Factors Causing Link Loss (continued)

Link-Loss Factor	Estimated Link Loss Value	Sample Link Loss (LL) Calculation Values
Modal and chromatic dispersion	Multimode—None, if product of bandwidth and distance is less than 500 MHz/km	0 dBm
	Single-mode—None	0 dBm
Connector	0.5 dBm	This example assumes five connectors. Loss for five connectors: 5 (0.5 dBm) = 2.5 dBm.
Splice	0.5 dBm	This example assumes two splices. Loss for two splices: 2 (0.5 dBm) = 1 dBm.
Fiber attenuation	Multimode—1 dBm/km	This example assumes the link is 2 km long. Fiber attenuation for 2 km: 2 km (1 dBm/km) = 2 dBm.
	Single-mode—0.5 dBm/km	This example assumes the link is 2 km long. Fiber attenuation for 2 km: 2 km (0.5 dBm/km) = 1 dBm.
Clock Recovery Module (CRM)	1 dBm	1 dBm

NOTE: **For information about the actual amount of signal loss caused by equipment and other factors, see your vendor documentation for that equipment.**

2. Calculate the (P_M) by subtracting (LL) from (P_B):

   P_B – LL = P_M

   13 dBm – 0.5 dBm [HOL] – 5 (0.5 dBm) – 2 (0.5 dBm) – 2 km (1.0 dBm/km) – 1 dB [CRM] = P_M

   13 dBm – 0.5 dBm – 2.5 dBm – 1 dBm – 2 dBm – 1 dBm = P_M

   P_M = 6 dBm

   The calculated power margin is greater than zero, indicating that the link has sufficient power for transmission. Also, the power margin value does not exceed the maximum receiver input power. Refer to the specifications for your receiver to find the maximum receiver input power.

Related Documentation

- Understanding QFX Series Fiber-Optic Cable Signal Loss, Attenuation, and Dispersion on page 269

Calculating the EX Series Switch Fiber-Optic Cable Power Budget

To ensure that fiber-optic connections have sufficient power for correct operation, calculate the link's power budget when planning fiber-optic cable layout and distances to ensure that fiber-optic connections have sufficient power for correct operation. The power budget is the maximum amount of power the link can transmit. When you calculate the power budget, you use a worst-case analysis to provide a margin of error, even though all the parts of an actual system do not operate at the worst-case levels.

To calculate the worst-case estimate for fiber-optic cable power budget (P_B) for the link:

1. Determine values for the link's minimum transmitter power (P_T) and minimum receiver sensitivity (P_R). For example, here, (P_T) and (P_R) are measured in decibels, and decibels are referred to one milliwatt (dBm).

   P_T = –15 dBm

   P_R = –28 dBm

   NOTE: **See the specifications for your transmitter and receiver to find the minimum transmitter power and minimum receiver sensitivity.**

2. Calculate the power budget (P_B) by subtracting (P_R) from (P_T):

   –15 dBm – (–28 dBm) = 13 dBm

Calculating the EX Series Switch Fiber-Optic Cable Power Margin

Calculate the link's power margin when planning fiber-optic cable layout and distances to ensure that fiber-optic connections have sufficient signal power to overcome system losses and still satisfy the minimum input requirements of the receiver for the required performance level. The power margin (P_M) is the amount of power available after attenuation or link loss (LL) has been subtracted from the power budget (P_B).

When you calculate the power margin, you use a worst-case analysis to provide a margin of error, even though all the parts of an actual system do not operate at worst-case levels. A power margin (P_M) greater than zero indicates that the power budget is sufficient to operate the receiver and that it does not exceed the maximum receiver input power. This means the link will work. A (P_M) that is zero or negative indicates insufficient power to operate the receiver. See the specification for your receiver to find the maximum receiver input power.

Before you begin to calculate the power margin:

Copyright © 2018, Juniper Networks, Inc.

- Calculate the power budget. See "Calculating the EX Series Switch Fiber-Optic Cable Power Budget" on page 274.

To calculate the worst-case estimate for the power margin (P_M) for the link:

1. Determine the maximum value for link loss (*LL*) by adding estimated values for applicable link-loss factors—for example, use the sample values for various factors as provided in Table 100 on page 272 (here, the link is 2 km long and multimode, and the (P_B) is 13 dBm):

Table 101: Estimated Values for Factors Causing Link Loss

Link-Loss Factor	Estimated Link-Loss Value	Sample (LL) Calculation Values
Higher-order mode losses (HOL)	• Multimode—0.5 dBm • Single mode—None	• 0.5 dBm • 0 dBm
Modal and chromatic dispersion	• Multimode—None, if product of bandwidth and distance is less than 500 MHz/km • Single mode—None	• 0 dBm • 0 dBm
Connector	0.5 dBm	This example assumes 5 connectors. Loss for 5 connectors: (5) * (0.5 dBm) = 2.5 dBm
Splice	0.5 dBm	This example assumes 2 splices. Loss for two splices: (2) * (0.5 dBm) = 1 dBm
Fiber attenuation	• Multimode—1 dBm/km • Single mode—0.5 dBm/km	This example assumes the link is 2 km long. Fiber attenuation for 2 km: • (2 km) * (1.0 dBm/km) = 2 dBm • (2 km) * (0.5 dBm/km) = 1 dBm
Clock Recovery Module (CRM)	1 dBm	1 dBm

NOTE: **For information about the actual amount of signal loss caused by equipment and other factors, see your vendor documentation for that equipment.**

2. Calculate the (P_M) by subtracting (*LL*) from (P_B):

   $P_B - LL = P_M$

   (13 dBm) – (0.5 dBm [HOL]) – ((5) * (0.5 dBm)) – ((2) * (0.5 dBm)) – ((2 km) * (1.0 dBm/km)) – (1 dB [CRM]) = P_M

   13 dBm – 0.5 dBm – 2.5 dBm – 1 dBm – 2 dBm – 1 dBm = P_M

$P_M = 6$ dBm

The calculated power margin is greater than zero, indicating that the link has sufficient power for transmission. Also, the power margin value does not exceed the maximum receiver input power. Refer to the specification for your receiver to find the maximum receiver input power.

Copyright © 2018, Juniper Networks, Inc.

CHAPTER 13

Planning QFX3100 Power Requirements

- AC Power Specifications for a QFX3100 Director Device on page 277
- AC Power Cord Specifications for a QFX3100 Director Device on page 277

AC Power Specifications for a QFX3100 Director Device

Table 102 on page 277 describes the AC power specifications for a QFX3100 Director device.

Table 102: AC Power Specifications for a QFX3100 Director Device

Item	Specifications
AC input voltage	Operating range: 100–240 VAC
AC input line frequency	50–60 Hz
AC input current rating	• 5 A at 100 VAC • 2 A at 240 VAC
Typical power consumption	476 W
Maximum power consumption	220 W

Related Documentation

- AC Power Supply in a QFX3100 Director Device on page 34
- AC Power Cord Specifications for a QFX3100 Director Device on page 277

AC Power Cord Specifications for a QFX3100 Director Device

Detachable AC power cords are supplied with the QFX3100 Director device. The coupler is type C13 as described by International Electrotechnical Commission (IEC) standard 60320. The plug at the male end of the power cord fits into the power source outlet that is standard for your geographical location.

Copyright © 2018, Juniper Networks, Inc.

CAUTION: The supplied AC power cord for the switches is intended for use with the QFX3100 Director device only and not for any other use.

NOTE: In North America, AC power cords must not exceed 4.5 meters (approximately 14.75 feet) in length, to comply with National Electrical Code (NEC) Sections 400-8 (NFPA 75, 5-2.2) and 210-52 and Canadian Electrical Code (CEC) Section 4-010(3). The cords supplied with the QFX3100 Director device are in compliance.

Table 103 on page 278 lists AC power cord specifications provided for each country or region.

Table 103: AC Power Cord Specifications for a QFX3100 Director Device

Country or Region	Electrical Specifications	Plug Standards
Australia	250 VAC, 10 A, 50 Hz	AS/NZ 3112-1993
China	250 VAC, 10 A, 50 Hz	GB2099.1 1996 and GB1002 1996 (CH1-10P)
Europe (except Italy, Switzerland, and United Kingdom)	250 VAC, 10 A, 50 Hz	CEE (7) VII
Italy	250 VAC, 10 A, 50 Hz	CEI 23-16/VII
Japan	125 VAC, 12 A, 50 Hz or 60 Hz	JIS 8303
Korea	250 VAC, 10A, 50 Hz	CEE 7/4
North America	125 VAC, 13 A, 60 Hz	NEMA 5-15
Switzerland	250 VAC, 10A, 50 Hz	SEV 1011 SEV 6534/2
United Kingdom	250 VAC, 10 A, 50 Hz	BS 1363A

Figure 144 on page 278 illustrates the plug on the power cord for some of the countries or regions listed in Table 103 on page 278.

Figure 144: AC Plug Types

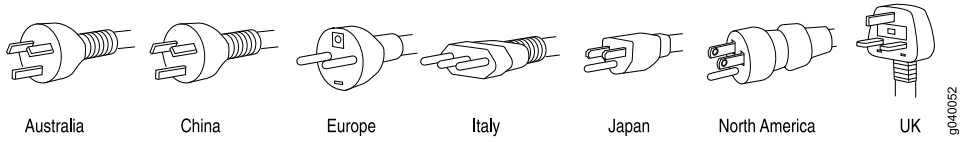

Related Documentation

- AC Power Supply in a QFX3100 Director Device on page 34

Copyright © 2018, Juniper Networks, Inc.

- General Safety Guidelines and Warnings on page 329
- General Electrical Safety Guidelines and Warnings on page 359
- Prevention of Electrostatic Discharge Damage on page 360

Copyright © 2018, Juniper Networks, Inc.

CHAPTER 14

Planning QFX3008-I Power Requirements

- AC Power Specifications for a QFX3008-I Interconnect Device with Single-Phase Wiring Trays on page 281
- AC Power Specifications for a QFX3008-I Interconnect Device with Three-Phase Delta Wiring Trays on page 282
- AC Power Specifications for a QFX3008-I Interconnect Device with Three-Phase Wye Wiring Trays on page 282
- Power Requirements for a QFX3008-I Interconnect Device on page 283
- AC Power Cord Specifications for a QFX3008-I Interconnect Device with Single-Phase Wiring Trays on page 283
- AC Power Cord Specifications for a QFX3008-I Interconnect Device with Three-Phase Delta Wiring Trays on page 285
- AC Power Cord Specifications for a QFX3008-I Interconnect Device with Three-Phase Wye Wiring Trays on page 286
- Calculating Power Requirements for a QFX3008-I Interconnect Device on page 288

AC Power Specifications for a QFX3008-I Interconnect Device with Single-Phase Wiring Trays

Table 104 on page 281 lists the AC power system specifications for a QFX3008-I Interconnect device using single-phase wiring trays.

Table 104: AC Power Specifications for a QFX3008-I Interconnect Device with Single-Phase Wiring Trays

Item	Specifications
AC input voltage	200–240 VAC
AC input line frequency	50–60 Hz
AC system current rating	16 A per appliance inlet (48 A per wiring tray)
AC system input power	9000 W (3000 W per power supply)

Related Documentation

- AC Power Supply in a QFX3008-I Interconnect Device on page 56

- AC Power Supply LEDs on a QFX3008-I Interconnect Device on page 734
- AC Power Cord Specifications for a QFX3008-I Interconnect Device with Single-Phase Wiring Trays on page 283

AC Power Specifications for a QFX3008-I Interconnect Device with Three-Phase Delta Wiring Trays

Table 105 on page 282 lists the AC power system specifications for a QFX3008-I Interconnect device using three-phase delta wiring trays.

Table 105: AC Power Specifications for a QFX3008-I Interconnect Device with Three-Phase Delta Wiring Trays

Item	Specifications
AC input voltage	200–240 VAC
AC input line frequency	50–60 Hz
AC system current rating	40 A
AC system input power	13,333 W

Related Documentation

- AC Power Supply in a QFX3008-I Interconnect Device on page 56
- AC Power Supply LEDs on a QFX3008-I Interconnect Device on page 734
- AC Power Cord Specifications for a QFX3008-I Interconnect Device with Three-Phase Delta Wiring Trays on page 285

AC Power Specifications for a QFX3008-I Interconnect Device with Three-Phase Wye Wiring Trays

Table 106 on page 282 lists the AC power system specifications for a QFX3008-I Interconnect device using three-phase wye wiring trays.

Table 106: AC Power Specifications for a QFX3008-I Interconnect Device with Three-Phase Wye Wiring Trays

Item	Specifications
AC input voltage	380 VAC
AC input line frequency	50–60 Hz
AC system current rating	24 A
AC system input power	13,333 W

Copyright © 2018, Juniper Networks, Inc.

Related Documentation

- AC Power Supply in a QFX3008-I Interconnect Device on page 56
- AC Power Supply LEDs on a QFX3008-I Interconnect Device on page 734
- AC Power Cord Specifications for a QFX3008-I Interconnect Device with Three-Phase Wye Wiring Trays on page 286

Power Requirements for a QFX3008-I Interconnect Device

Table 107 on page 283 lists the power requirements for different hardware components of a QFX3008-I Interconnect device under typical voltage conditions.

Table 107: QFX3008-I Interconnect Device Component Power Requirements

Components	Equivalent Input Power
Chassis, including Control Boards, rear cards, cooling system, and power components	• 3100 W (at normal fan speed, typical input power) • 4500 W (at maximum fan speed, maximum input power)
16-port QSFP+ front card (including optical transceivers)	• 190 W (typical input power) • 240 W (maximum input power)

Related Documentation

- Calculating Power Requirements for a QFX3008-I Interconnect Device on page 288
- AC Power Specifications for a QFX3008-I Interconnect Device with Three-Phase Delta Wiring Trays on page 282
- AC Power Specifications for a QFX3008-I Interconnect Device with Three-Phase Wye Wiring Trays on page 282

AC Power Cord Specifications for a QFX3008-I Interconnect Device with Single-Phase Wiring Trays

Most sites distribute power through a main conduit that leads to frame-mounted power distribution panels, one of which can be located at the top of the rack that houses the device. AC power cords connect each wiring tray to the power distribution panel.

Three detachable AC power cords, each 2.5 m (approximately 8 ft) long, are required for each single-phase wiring tray. Depending on your configuration, these power cords are supplied with your device. The appliance coupler at the female end of the cord inserts into one of the three appliance inlets on the faceplate of the single-phase wiring tray. The coupler is type C19 as described by International Electrotechnical Commission (IEC) standard 60320. The plug at the male end of the power cord fits into the power source receptacle that is standard for your geographical location.

WARNING: **The QFX3008-I Interconnect device is pluggable type A equipment installed in a restricted-access location. It has a separate protective earthing terminal provided on the chassis in addition to the grounding pin of the power**

supply cord. This separate protective earthing terminal must be permanently connected to earth.

WARNING: The AC power cord for the device is intended for use with the device only and not for any other use.

WARNING: Translation from Japanese: The attached power cable is only for this product. Do not use the cable for another product.

注意

附属の電源コードセットはこの製品専用です。
他の電気機器には使用しないでください。

g017253

CAUTION: Power cords and cables must not block access to device components or drape where people could trip on them.

NOTE: In North America, AC power cords must not exceed 4.5 m (approximately 14.75 ft) in length, to comply with National Electrical Code (NEC) Sections 400-8 (NFPA 75, 5-2.2) and 210-52, and Canadian Electrical Code (CEC) Section 4-010(3). The cords supplied with the router are in compliance.

Table 108 on page 284 provides specifications for the AC power cord provided for each region supported.

Table 108: AC Power Cord Specifications for a Single-Phase Wiring Tray

Country/Region	Electrical Specifications	Plug Standards
Australia	250 VAC, 15 A, 50 Hz	AS/NZS 3112 Type SAA/3/15
China	250 VAC, 16 A, 50 Hz	GB 1002 Type PRC/3/16
Europe (except Italy, Switzerland, and United Kingdom)	250 VAC, 16 A, 50 Hz	CEE (7) VII Type VIIG
Italy	250 VAC, 16 A, 50 Hz	CEI 23-16 Type I/3/16

Copyright © 2018, Juniper Networks, Inc.

Table 108: AC Power Cord Specifications for a Single-Phase Wiring Tray (continued)

Country/Region	Electrical Specifications	Plug Standards
Japan	250 VAC, 16 A, 50 Hz	NEMA 6-20 Type N6/20
		NEMA L6-20 Type NEMA Locking
	125VAC, 15A, 50 Hz	NEMA 5-20 Type N5/20
North America	250 VAC, 16 A, 50 Hz	NEMA 6-20 Type N6/20
		NEMA L6-20 Type NEMA Locking
	125 VAC, 20 A, 50 Hz	NEMA 5-20 Type N5/20
South Korea	250 VAC, 16 A, 50 Hz	CEE(7) VII Type VIIG
Switzerland	250 VAC, 16 A, 50 Hz	SEV 5934-2 Type 23G
United Kingdom	250 VAC, 13 A, 50 Hz	BS 1363/A Type BS89/13

Related Documentation

- AC Power Supply in a QFX3008-I Interconnect Device on page 56
- General Electrical Safety Guidelines and Warnings on page 359
- AC Power Electrical Safety Guidelines on page 362
- AC Power Disconnection Warning on page 363
- Connecting AC Power to a QFX3008-I Interconnect Device with Single-Phase Wiring Trays on page 411

AC Power Cord Specifications for a QFX3008-I Interconnect Device with Three-Phase Delta Wiring Trays

Most sites distribute power through a main conduit that leads to frame-mounted power distribution panels, one of which can be located at the top of the rack that houses the device. An AC power cord connects each wiring tray to the power distribution panel.

WARNING: **The QFX3008-I Interconnect device is pluggable type A equipment installed in a restricted-access location. It has a separate protective earthing terminal provided on the chassis in addition to the grounding pin of the power supply cord. This separate protective earthing terminal must be permanently connected to earth.**

CAUTION: **Power cords and cables must not block access to device components or drape where people could trip on them.**

Each three-phase AC wiring tray has a metal wiring compartment that contains the AC terminal block and ground. There are two types of three-phase wiring trays: *delta* (three-wire) and *wye* (four-wire). The *delta* AC terminal block consists of three input terminals labeled **L1**, **L2**, and **L3**, from top to bottom in the common three-phase naming convention.

You must provide cords appropriate for your geographical location. The AC power cord wires insert into the AC terminal block on the wiring tray.

The power cords you provide must comply with the specifications listed in Table 109 on page 286.

NOTE: In North America, AC power cords must not exceed 4.5 m (approximately 14.75 ft) in length, to comply with National Electrical Code (NEC) Sections 400-8 (NFPA 75, 5-2.2) and 210-52, and Canadian Electrical Code (CEC) Section 4-010(3).

Table 109: Three-Phase Delta AC Power Cord Specifications

Electrical Rating	Plug Type	Plug Color	Cord or Cable Type
250 VAC, 60 A	International Electrotechnical Commission (IEC) 60309	Blue	The cord or cable must be HAR compliant, IEC 60245 (designation 60245 IEC 53) or IEC 60227 (designation 60227 IEC 53); or meet one of the following standards (North America): SV, SVE, SVO, SVOO, SVT, SVTO, SVTOO, SP-2, SPE-2, SPT-2, NISP-2, NISPE-2, NISPT-2, SP-3, SPE-3, SPT-3, SJ, SJE, SJO, SJOO, SJT, SJTO, SJTOO, S, SE, SO, SOO, ST, STO, STOO

Related Documentation

- AC Power Supply in a QFX3008-I Interconnect Device on page 56
- Wiring Tray in a QFX3008-I Interconnect Device on page 58
- AC Power Electrical Safety Guidelines on page 362
- AC Power Disconnection Warning on page 363
- General Electrical Safety Guidelines and Warnings on page 359
- Connecting AC Power to a QFX3008-I Interconnect Device with Three-Phase Delta Wiring Trays on page 418

AC Power Cord Specifications for a QFX3008-I Interconnect Device with Three-Phase Wye Wiring Trays

Most sites distribute power through a main conduit that leads to frame-mounted power distribution panels, one of which can be located at the top of the rack that houses the device. An AC power cord connects each wiring tray to the power distribution panel.

Copyright © 2018, Juniper Networks, Inc.

WARNING: The QFX3008-I Interconnect device is pluggable type A equipment installed in a restricted-access location. It has a separate protective earthing terminal provided on the chassis in addition to the grounding pin of the power supply cord. This separate protective earthing terminal must be permanently connected to earth.

CAUTION: Power cords and cables must not block access to device components or drape where people could trip on them.

Each three-phase AC wiring tray has a metal wiring compartment that contains the AC terminal block and ground. There are two types of three-phase wiring trays: *delta* (three-wire) and *wye* (four-wire). The *wye* AC terminal block consists of four input terminals labeled **N**, **L1**, **L2**, and **L3**, from top to bottom in the common three-phase naming convention.

You must provide cords appropriate for your geographical location. The AC power cord wires insert into the AC terminal block on the wiring tray.

The power cords you provide must comply with the specifications listed in Table 110 on page 287.

NOTE: In North America, AC power cords must not exceed 4.5 m (approximately 14.75 ft) in length, to comply with National Electrical Code (NEC) Sections 400-8 (NFPA 75, 5-2.2) and 210-52, and Canadian Electrical Code (CEC) Section 4-010(3).

Table 110: Three-Phase Delta AC Power Cord Specifications

Electrical Rating	Plug Type	Plug Color	Cord or Cable Type
400 VAC, 32 A	International Electrotechnical Commission (IEC) 60309	Red	The cord or cable must be HAR compliant, IEC 60245 (designation 60245 IEC 53) or IEC 60227 (designation 60227 IEC 53); or meet one of the following standards (North America): SV, SVE, SVO, SVOO, SVT, SVTO, SVTOO, SP-2, SPE-2, SPT-2, NISP-2, NISPE-2, NISPT-2, SP-3, SPE-3, SPT-3, SJ, SJE, SJO, SJOO, SJT, SJTO, SJTOO, S, SE, SO, SOO, ST, STO, STOO

Related Documentation

- AC Power Supply in a QFX3008-I Interconnect Device on page 56
- Wiring Tray in a QFX3008-I Interconnect Device on page 58
- AC Power Electrical Safety Guidelines on page 362
- AC Power Disconnection Warning on page 363
- General Electrical Safety Guidelines and Warnings on page 359

Copyright © 2018, Juniper Networks, Inc.

- Connecting AC Power to a QFX3008-I Interconnect Device with Three-Phase Wye Wiring Trays on page 422

Calculating Power Requirements for a QFX3008-I Interconnect Device

Use the information in this topic to calculate power consumption, system thermal output, and number of power supplies required for different QFX3008-I Interconnect device configurations.

Before you begin these calculations:

- Ensure that you know the power requirements of different QFX3008-I Interconnect device components. See "Power Requirements for a QFX3008-I Interconnect Device" on page 283.

- Power Consumption of Different QFX3008-I Interconnect Device Configurations on page 289
- System Thermal Output for Different QFX3008-I Interconnect Device Configurations on page 289

 Copyright © 2018, Juniper Networks, Inc.

Power Consumption of Different QFX3008-I Interconnect Device Configurations

- To calculate the maximum system power consumption for a QFX3008-I Interconnect device with one 16-port QSFP+ front card installed:

  Add the individual power requirements of all components in the chassis configuration. See "Power Requirements for a QFX3008-I Interconnect Device" on page 283.

  Thus, power consumption = Power requirements of: (Chassis) + 1 (16-port QSFP+ front card)

  = 4500 W + 240 W

  = 4740 W

- To calculate the maximum system power consumption for a QFX3008-I Interconnect device with eight 16-port QSFP+ front cards installed:

  Add the individual power requirements of all components in the chassis configuration. See "Power Requirements for a QFX3008-I Interconnect Device" on page 283.

  Thus, power consumption = Power requirements of: (Chassis) + 8 (16-port QSFP+ front card)

  = 4500 W + 8 (240 W)

  = 4500 W + 1920 W

  = 6420 W

System Thermal Output for Different QFX3008-I Interconnect Device Configurations

To calculate the system thermal output in British thermal units (BTU) per hour for your device configuration, multiply the maximum system power consumption of the switch by 3.41.

To calculate the system thermal output for a fully loaded QFX3008-I Interconnect device:

1. Compute the maximum system power consumption of a fully loaded configuration. See maximum system power consumption for a fully loaded configuration device in "Power Consumption of Different QFX3008-I Interconnect Device Configurations" on page 289.

2. Multiply the maximum system power consumption by 3.41

   = 6420 W x 3.41

   System thermal output for a fully loaded switch configuration = 21,892 BTU/hr

NOTE: Using the maximum system power consumption values to calculate the system thermal output often results in overprovisioning the cooling systems. Typical power consumption is about one-third lower than these calculated values.

Related Documentation

- AC Power Specifications for a QFX3008-I Interconnect Device with Single-Phase Wiring Trays on page 281
- AC Power Specifications for a QFX3008-I Interconnect Device with Three-Phase Delta Wiring Trays on page 282
- AC Power Specifications for a QFX3008-I Interconnect Device with Three-Phase Wye Wiring Trays on page 282

Copyright © 2018, Juniper Networks, Inc.

CHAPTER 15

Planning QFX5100 Power Requirements

- AC Power Specifications for a QFX5100 Device on page 291
- AC Power Cord Specifications for a QFX Series Device on page 292
- DC Power Specifications for a QFX5100 Device on page 293

AC Power Specifications for a QFX5100 Device

Table 111 on page 291 describes the AC power specifications for a QFX5100 device.

Table 111: AC Power Specifications for a QFX5100 Device

Item	Specification
AC input voltage	Operating range: • 100 / 240 VAC
AC input line frequency	50–60 Hz (all product SKUs)
AC input current rating	• 4.5 A at 100–120 VAC • 2.0 A at 200–240 VAC
Typical power consumption	
QFX5100-24Q	230 W
QFX5100-48S and QFX5100-48SH	230 W
QFX5100-48T and QFX5100-48TH	322 W
QFX5100-96S	315 W

Copyright © 2018, Juniper Networks, Inc.

Table 111: AC Power Specifications for a QFX5100 Device (continued)

Item	Specification
Maximum power consumption	
QFX5100-24Q	365 W
QFX5100-48S and QFX5100-48SH	365 W
QFX5100-48T and QFX5100-48TH	395 W
QFX5100-96S	470 W

Related Documentation

- AC Power Cord Specifications for a QFX Series Device on page 292
- AC Power Supply for a QFX5100 Device on page 94
- General Safety Guidelines and Warnings on page 329
- General Electrical Safety Guidelines and Warnings on page 359

AC Power Cord Specifications for a QFX Series Device

Detachable AC power cords are shipped with the chassis, if you include them as part of your order. The coupler is type C13 as described by International Electrotechnical Commission (IEC) standard 60320. The plug at the male end of the power cord fits into the power source outlet that is standard for your geographical location.

NOTE: In North America, AC power cords must not exceed 14.75 feet (approximately 4.5 meters) in length, to comply with National Electrical Code (NEC) Sections 400-8 (NFPA 75, 5-2.2) and 210-52, and Canadian Electrical Code (CEC) Section 4-010(3). The cords that can be ordered for the QFX Series switches are in compliance.

Table 112 on page 293 lists AC power cord specifications provided for each country or region.

Copyright © 2018, Juniper Networks, Inc.

Table 112: AC Power Cord Specifications

Country/Region	Electrical Specifications	Plug Standards	Shipped Juniper Model Number	Spare Juniper Model Number	Graphic
Australia	250 VAC, 10 A, 50 Hz	AS/NZ 3109-1996	CG_CBL-C13-06-AU	CBL-EX-PWR-C13-AU	
China	250 VAC, 10 A, 50 Hz	GB 1002-1996	CG_CBL-C13-06-CH	CBL-EX-PWR-C13-CH	
Europe (except Italy, Switzerland, and United Kingdom)	250 VAC, 10 A, 50 Hz	CEE (7) VII	CG_CBL-C13-06-EU	CBL-EX-PWR-C13-EU	
Italy	250 VAC, 10 A, 50 Hz	CEI 23-16/VII	CG_CBL-C13-06-IT	CBL-EX-PWR-C13-IT	
Japan	125 VAC, 12 A, 50 Hz or 60 Hz	JIS C8303	CG_CBL-C13-06-JP	CBL-EX-PWR-C13-JP	
North America	(QFX10002-36Q, QFX10002-72Q only) 125 VAC, 13 A, 60 Hz (all models) 250 VAC, 13 A, 60 Hz (all models) 250 VAC, 13 A, 60 Hz	CAN/CSA No. 49-92 NEMA L6-15 NEMA 6-15	CG_CBL-C13-06-US	CBL-EX-PWR-C13-US CBL-PW-C13-250-US CBL-PWR-C13-250-US	
South Korea	250 VAC, 10 A, 60 Hz 250 VAC, 13 A, 60 Hz	KSC 8305; K60884-1	CG_CBL-C13-06-KR	CBL-EX-PWR-C13-KR	
Switzerland	250 VAC, 10 A, 50 Hz	SEV 1011 SEV 1991; EN 60320 C13	CG_CBL-C13-06-SZ	CBL-EX-PWR-C13-SZ	
United Kingdom	250 VAC, 10 A, 50 Hz	BS 1363/A	CG_CBL-C13-06-UK	CBL-EX-PWR-C13-UK	

Related Documentation

- General Safety Guidelines and Warnings on page 329
- General Electrical Safety Guidelines and Warnings on page 359
- Prevention of Electrostatic Discharge Damage on page 360

DC Power Specifications for a QFX5100 Device

Table 113 on page 294 describes the DC power specifications for DC product SKUs of the QFX5100 device.

Table 113: DC Power Specifications for a QFX5100 Device

Item	Product SKUs	Specifications
DC input voltage	QFX5100-24Q QFX5100-48S QFX5100-48T	• Rated operating voltage: –48 VDC to -60 VDC • Operating voltage range: -40 VDC through –72 VDC
	QFX5100-96S	• Rated operating voltage: VDC -48 VDC to -60 VDC • Operating voltage range: –40 VDC through -72 VDC
DC input current rating	QFX5100-24Q QFX5100-48S QFX5100-48T QFX5100-96S	10 A maximum
Typical power consumption	QFX5100-48S QFX5100-48T QFX5100-24Q	300 W
	QFX5100-96S	315 W
Maximum power consumption	QFX5100-24Q QFX5100-48S QFX5100-48T	385 W
	QFX5100-96S	470 W

Related Documentation

- DC Power Supply in a QFX5100 Device on page 96
- DC Power Supply LEDs on a QFX5100 Device on page 746

Copyright © 2018, Juniper Networks, Inc.

CHAPTER 16

Planning QFX3600 Power Requirements

- AC Power Specifications for a QFX3600 or QFX3600-I Device on page 295
- AC Power Cord Specifications for a QFX Series Device on page 295
- DC Power Specifications for a QFX3600 or QFX3600-I Device on page 297

AC Power Specifications for a QFX3600 or QFX3600-I Device

Table 114 on page 295 describes the AC power specifications for a QFX3600 or QFX3600-I device.

Table 114: AC Power Specifications for a QFX3600 or QFX3600-I Device

Item	Specification
AC input voltage	Operating range: • 100–240 VAC
AC input line frequency	50–60 Hz
AC input current rating	• 4 A at 100VAC • 2 A at 240 VAC
Typical power consumption	255 W
Maximum power consumption	345 W

Related Documentation

- AC Power Cord Specifications for a QFX Series Device on page 292
- AC Power Supply for a QFX3500, QFX3600, or QFX3600-I Device on page 110
- General Safety Guidelines and Warnings on page 329
- General Electrical Safety Guidelines and Warnings on page 359

AC Power Cord Specifications for a QFX Series Device

Detachable AC power cords are shipped with the chassis, if you include them as part of your order. The coupler is type C13 as described by International Electrotechnical

Commission (IEC) standard 60320. The plug at the male end of the power cord fits into the power source outlet that is standard for your geographical location.

NOTE: In North America, AC power cords must not exceed 14.75 feet (approximately 4.5 meters) in length, to comply with National Electrical Code (NEC) Sections 400-8 (NFPA 75, 5-2.2) and 210-52, and Canadian Electrical Code (CEC) Section 4-010(3). The cords that can be ordered for the QFX Series switches are in compliance.

Table 112 on page 293 lists AC power cord specifications provided for each country or region.

Copyright © 2018, Juniper Networks, Inc.

Table 115: AC Power Cord Specifications

Country/Region	Electrical Specifications	Plug Standards	Shipped Juniper Model Number	Spare Juniper Model Number	Graphic
Australia	250 VAC, 10 A, 50 Hz	AS/NZ 3109-1996	CG_CBL-C13-06-AU	CBL-EX-PWR-C13-AU	
China	250 VAC, 10 A, 50 Hz	GB 1002-1996	CG_CBL-C13-06-CH	CBL-EX-PWR-C13-CH	
Europe (except Italy, Switzerland, and United Kingdom)	250 VAC, 10 A, 50 Hz	CEE (7) VII	CG_CBL-C13-06-EU	CBL-EX-PWR-C13-EU	
Italy	250 VAC, 10 A, 50 Hz	CEI 23-16/VII	CG_CBL-C13-06-IT	CBL-EX-PWR-C13-IT	
Japan	125 VAC, 12 A, 50 Hz or 60 Hz	JIS C8303	CG_CBL-C13-06-JP	CBL-EX-PWR-C13-JP	
North America	(QFX10002-36Q, QFX10002-72Q only) 125 VAC, 13 A, 60 Hz (all models) 250 VAC, 13 A, 60 Hz (all models) 250 VAC, 13 A, 60 Hz	CAN/CSA No. 49-92 NEMA L6-15 NEMA 6-15	CG_CBL-C13-06-US	CBL-EX-PWR-C13-US CBL-PW-C13-250-US CBL-PWR-C13-250-US	
South Korea	250 VAC, 10 A, 60 Hz 250 VAC, 13 A, 60 Hz	KSC 8305; K60884-1	CG_CBL-C13-06-KR	CBL-EX-PWR-C13-KR	
Switzerland	250 VAC, 10 A, 50 Hz	SEV 1011 SEV 1991; EN 60320 C13	CG_CBL-C13-06-SZ	CBL-EX-PWR-C13-SZ	
United Kingdom	250 VAC, 10 A, 50 Hz	BS 1363/A	CG_CBL-C13-06-UK	CBL-EX-PWR-C13-UK	

Related Documentation

- General Safety Guidelines and Warnings on page 329
- General Electrical Safety Guidelines and Warnings on page 359
- Prevention of Electrostatic Discharge Damage on page 360

DC Power Specifications for a QFX3600 or QFX3600-I Device

Table 116 on page 298 describes the DC power specifications for a QFX3600 or QFX3600-I device.

Table 116: DC Power Specifications for a QFX3600 or QFX3600-I Device

Item	Specifications
DC input voltage	• Minimum operating voltage: –40 VDC • Nominal operating voltage: –48 VDC • Operating voltage range: –40 VDC through –72 VDC
DC input current rating	8 A maximum at nominal operating voltage (–48 VDC)
Typical power consumption	341 W
Maximum power consumption	252 W

Related Documentation

- DC Power Supply for a QFX3500, QFX3600, or QFX3600-I Device on page 112
- DC Power Supply LEDs on a QFX3500, QFX3600, or QFX3600-I Device on page 754

Copyright © 2018, Juniper Networks, Inc.

CHAPTER 17

Planning QFX3500 Power Requirements

- AC Power Specifications for a QFX3500 Device on page 299
- AC Power Cord Specifications for a QFX Series Device on page 299
- DC Power Specifications for a QFX3500 Device on page 301

AC Power Specifications for a QFX3500 Device

Table 117 on page 299 describes the AC power specifications for a QFX3500 device.

Table 117: AC Power Specifications for a QFX3500 Device

Item	Specification
AC input voltage	Operating range: • 100–127 VAC • 200–240 VAC
AC input line frequency	50–60 Hz
AC input current rating	• 7.8 A at 100–127 VAC • 3.8 A at 200–240 VAC
Typical power consumption	230 W
Maximum power consumption	365 W

Related Documentation

- AC Power Cord Specifications for a QFX Series Device on page 292
- AC Power Supply for a QFX3500, QFX3600, or QFX3600-I Device on page 110
- General Safety Guidelines and Warnings on page 329
- General Electrical Safety Guidelines and Warnings on page 359

AC Power Cord Specifications for a QFX Series Device

Detachable AC power cords are shipped with the chassis, if you include them as part of your order. The coupler is type C13 as described by International Electrotechnical

Commission (IEC) standard 60320. The plug at the male end of the power cord fits into the power source outlet that is standard for your geographical location.

NOTE: In North America, AC power cords must not exceed 14.75 feet (approximately 4.5 meters) in length, to comply with National Electrical Code (NEC) Sections 400-8 (NFPA 75, 5-2.2) and 210-52, and Canadian Electrical Code (CEC) Section 4-010(3). The cords that can be ordered for the QFX Series switches are in compliance.

Table 112 on page 293 lists AC power cord specifications provided for each country or region.

Copyright © 2018, Juniper Networks, Inc.

Table 118: AC Power Cord Specifications

Country/Region	Electrical Specifications	Plug Standards	Shipped Juniper Model Number	Spare Juniper Model Number	Graphic
Australia	250 VAC, 10 A, 50 Hz	AS/NZ 3109-1996	CG_CBL-C13-06-AU	CBL-EX-PWR-C13-AU	
China	250 VAC, 10 A, 50 Hz	GB 1002-1996	CG_CBL-C13-06-CH	CBL-EX-PWR-C13-CH	
Europe (except Italy, Switzerland, and United Kingdom)	250 VAC, 10 A, 50 Hz	CEE (7) VII	CG_CBL-C13-06-EU	CBL-EX-PWR-C13-EU	
Italy	250 VAC, 10 A, 50 Hz	CEI 23-16/VII	CG_CBL-C13-06-IT	CBL-EX-PWR-C13-IT	
Japan	125 VAC, 12 A, 50 Hz or 60 Hz	JIS C8303	CG_CBL-C13-06-JP	CBL-EX-PWR-C13-JP	
North America	(QFX10002-36Q, QFX10002-72Q only) 125 VAC, 13 A, 60 Hz (all models) 250 VAC, 13 A, 60 Hz (all models) 250 VAC, 13 A, 60 Hz	CAN/CSA No. 49-92 NEMA L6-15 NEMA 6-15	CG_CBL-C13-06-US	CBL-EX-PWR-C13-US CBL-PW-C13-250-US CBL-PWR-C13-250-US	
South Korea	250 VAC, 10 A, 60 Hz 250 VAC, 13 A, 60 Hz	KSC 8305; K60884-1	CG_CBL-C13-06-KR	CBL-EX-PWR-C13-KR	
Switzerland	250 VAC, 10 A, 50 Hz	SEV 1011 SEV 1991; EN 60320 C13	CG_CBL-C13-06-SZ	CBL-EX-PWR-C13-SZ	
United Kingdom	250 VAC, 10 A, 50 Hz	BS 1363/A	CG_CBL-C13-06-UK	CBL-EX-PWR-C13-UK	

Related Documentation

- General Safety Guidelines and Warnings on page 329
- General Electrical Safety Guidelines and Warnings on page 359
- Prevention of Electrostatic Discharge Damage on page 360

DC Power Specifications for a QFX3500 Device

Table 119 on page 302 describes the DC power specifications for a QFX3500 device.

Table 119: DC Power Specifications for a QFX3500 Device

Item	Specifications
DC input voltage	• Minimum operating voltage: –40 VDC • Nominal operating voltage: –48 VDC • Operating voltage range: –40 VDC through –72 VDC
DC input current rating	7 A maximum at nominal operating voltage (–48 VDC)
Typical power consumption	250 W
Maximum power consumption	385 W

Related Documentation

- DC Power Supply for a QFX3500, QFX3600, or QFX3600-I Device on page 112
- DC Power Supply LEDs on a QFX3500, QFX3600, or QFX3600-I Device on page 754

Copyright © 2018, Juniper Networks, Inc.

CHAPTER 18

Planning EX4300 Power Requirements

- AC Power Supply Specifications for EX4300 Switches on page 303
- AC Power Cord Specifications for an EX4300 Switch on page 305
- DC Power Supply Specifications for EX4300 Switches on page 309

AC Power Supply Specifications for EX4300 Switches

EX4300 switches except EX4300-48MP and EX4300-48MP-S switches support 350 W, 715 W, and 1100 W AC power supplies. EX4300-48MP and EX4300-48MP-S switches support 715 W, 1100 W, and 1400 W AC power supplies.

The tables in this topic provides power supply specification of AC power supplies used in an EX4300 switch:

- Table 120 on page 303: power supply specifications of 350 W AC power supplies for EX4300 switches except EX4300-48MP and EX4300-48MP-S switches
- Table 121 on page 304: AC power supply specifications of 715 W AC power supplies for EX4300 switches
- Table 122 on page 304: power supply specifications of 1100 W AC power supplies for EX4300 switches
- Table 123 on page 304: power supply specifications of 1400 W AC power supplies for EX4300 switches

Table 120: Power Supply Specifications of 350 W AC Power Supplies for EX4300 Switches Except EX4300-48MP and EX4300-48MP-S Switches

Item	Specification
AC input voltage	• Low-voltage line: 100–120 VAC • High-voltage line: 200–240 VAC
AC input line frequency	50–60 Hz
AC input current rating	• Low-voltage line: 4 A • High-voltage line: 2 A
Output power	350 W

Copyright © 2018, Juniper Networks, Inc.

NOTE: The 32-port EX4300 switches support only 350 W AC power supplies with front-to-back airflow direction.

Table 121: Power Supply Specifications of 715 W AC Power Supplies for EX4300 Switches

Item	Specification
AC input voltage	• Low-voltage line: 100–120 VAC • High-voltage line: 200–240 VAC
AC input line frequency	50–60 Hz
AC input current rating	EX4300 switches except EX4300-48MP and EX4300-48MP-S models • Low-voltage line: 11 A • High-voltage line: 5 A EX4300-48MP and EX4300-48MP-S switches • Low-voltage line: 8.5 A • High-voltage line: 3.5 A
Output power	715 W

Table 122: Power Supply Specifications of 1100 W AC Power Supplies for EX4300 Switches

Item	Specification
AC input voltage	• Low-voltage line: 115–120 VAC • High-voltage line: 200–240 VAC
AC input line frequency	50–60 Hz
AC input current rating	• Low-voltage line: 12 A • High-voltage line: 6 A
Output power	1100 W

Table 123: Power Supply Specifications of 1400 W AC Power Supplies for EX4300-48MP and EX4300-48MP-S Switches

Item	Specification
AC input voltage	• Low-voltage line: 100–140 VAC • High-voltage line: 200–240 VAC
AC input line frequency	50–60 Hz
AC input current rating	• Low-voltage line: 12 A • High-voltage line: 8 A

Copyright © 2018, Juniper Networks, Inc.

Table 123: Power Supply Specifications of 1400 W AC Power Supplies for EX4300-48MP and EX4300-48MP-S Switches (continued)

Item	Specification
Output power	1400 W

AC Power Cord Specifications for an EX4300 Switch

Each AC power supply has a single AC appliance inlet that requires a dedicated AC power feed. A detachable AC power cord is supplied with each AC power supply. The 350 W AC and the 715 W AC power supplies are shipped with AC power cords with the C13 coupler type and the 1100 W AC power supplies and 1400 W AC power supplies are shipped with AC power cord with the C15 coupler type as described by International Electrotechnical Commission (IEC) standard 60320. The plug at the male end of the power cord fits into the power source outlet that is standard for your geographical location.

NOTE: **In North America, AC power cords must not exceed 14.75 ft (4.5 m) in length, to comply with National Electrical Code (NEC) Section 400-8 (NFPA 75, 5-2.2) and Canadian Electrical Code (CEC) Section 4-010(3).**

The tables in this topic list the AC power cords specifications provided for different power supplies for each country or region.

- Table 124 on page 305—Power cords for 350 W AC for EX4300 switches except EX4300-48MP and EX4300-48MP-S switches and 715 W AC power supplies for EX4300 switches
- Table 125 on page 308—Power cords for 1100 W AC power supplies for EX4300 switches and 1400 W AC power supplies for EX4300-48MP and EX4300-48MP-S Switches

Table 124: AC Power Cord Specifications for 350 W Power Supplies for EX4300 Switches Except EX4300-48MP and EX4300-48MP-S Switches and 715 W AC Power Supplies for EX4300 Switches

Country/ Region	Electrical Specifications	Plug Standards	Juniper Model Number	Graphic
Argentina	250 VAC, 10 A, 50 Hz	IRAM 2073 Type RA/3	CBL-EX-PWR-C13-AR	No graphic available
Australia	250 VAC, 10 A, 50 Hz	AS/NZS 3112 Type SAA/3	CBL-EX-PWR-C13-AU	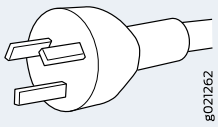 g021262
Brazil	250 VAC, 10 A, 50 Hz	NBR 14136 Type BR/3	CBL-EX-PWR-C13-BR	No graphic available

Table 124: AC Power Cord Specifications for 350 W Power Supplies for EX4300 Switches Except EX4300-48MP and EX4300-48MP-S Switches and 715 W AC Power Supplies for EX4300 Switches (continued)

Country/ Region	Electrical Specifications	Plug Standards	Juniper Model Number	Graphic
China	250 VAC, 10 A, 50 Hz	GB 1002-1996 Type PRC/3	CBL-EX-PWR-C13-CH	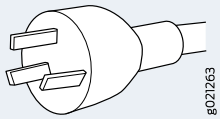 g021263
Europe (except Italy, Switzerland, and United Kingdom)	250 VAC, 10 A, 50 Hz	CEE (7) VII Type VIIG	CBL-EX-PWR-C13-EU	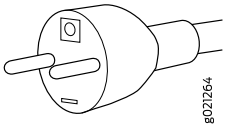 g021264
India	250 VAC, 10 A, 50 Hz	IS 1293 Type IND/3	CBL-EX-PWR-C13-IN	No graphic available

Copyright © 2018, Juniper Networks, Inc.

Table 124: AC Power Cord Specifications for 350 W Power Supplies for EX4300 Switches Except EX4300-48MP and EX4300-48MP-S Switches and 715 W AC Power Supplies for EX4300 Switches (continued)

Country/ Region	Electrical Specifications	Plug Standards	Juniper Model Number	Graphic
Israel	250 VAC, 10 A, 50 Hz	SI 32/1971 Type IL/3G	CBL-EX-PWR-C13-IL	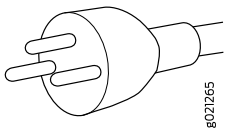 g021265
Italy	250 VAC, 10 A, 50 Hz	CEI 23-16 Type I/3G	CBL-EX-PWR-C13-IT	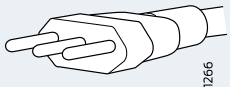 g021266
Japan	125 VAC, 12 A, 50 Hz or 60 Hz	SS-00259 Type VCTF	CBL-EX-PWR-C13-JP	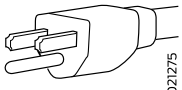 g021275
Korea	250 VAC, 10 A, 50 Hz or 60 Hz	CEE (7) VII Type VIIGK	CBL-EX-PWR-C13-KR	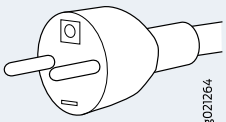 g021264
North America	125 VAC, 13 A, 60 Hz	NEMA 5-15 Type N5-15	CBL-EX-PWR-C13-US	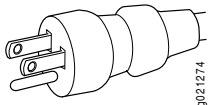 g021274
South Africa	250 VAC, 10 A, 50 Hz	SABS 164/1:1992 Type ZA/3	CBL-EX-PWR-C13-SA	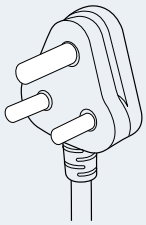 g021289
Switzerland	250 VAC, 10 A, 50 Hz	SEV 6534-2 Type 12G	CBL-EX-PWR-C13-SZ	No graphic available

Table 124: AC Power Cord Specifications for 350 W Power Supplies for EX4300 Switches Except EX4300-48MP and EX4300-48MP-S Switches and 715 W AC Power Supplies for EX4300 Switches (continued)

Country/ Region	Electrical Specifications	Plug Standards	Juniper Model Number	Graphic
Taiwan	125 VAC, 10 A, 50 Hz	NEMA 5-15P Type N5-15P	CBL-EX-PWR-C13-TW	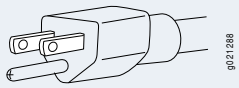 g021288
United Kingdom	250 VAC, 10 A, 50 Hz	BS 1363/A Type BS89/13	CBL-EX-PWR-C13-UK	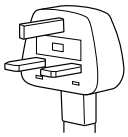 g021271

Table 125: AC Power Cord Specifications for 1100 W AC Power Supplies for EX4300 Switches and 1400 W AC Power Supplies for EX4300-48MP and EX4300-48MP-S Switches

Country/Region	Electrical Specifications	Plug Standards	Juniper Model Number
Argentina	250 VAC, 10 A, 50 Hz	IRAM 2073 Type RA/3	CBL-PWR-C15M-HITEMP-AR
Australia	250 VAC, 10 A, 50 Hz	AS/NZZS 3112-2000 Type SAA/3	CBL-PWR-C15M-HITEMP-AU
Brazil	250 VAC, 10 A, 50 Hz	NBR 14136 Type BR/3	CBL-PWR-C15M-HITEMP-BR
China	250 VAC, 10 A, 50 Hz	GB2099, GB1002 Type PRC/3	CBL-PWR-C15M-HITEMP-CH
Europe (except Italy, Switzerland, and United Kingdom)	250 VAC, 10 A, 50 Hz	CEE (7) VII Type VIIG	CBL-PWR-C15M-HITEMP-EU
Israel	250 VAC, 10 A, 50 Hz	SI 32 Type IL/3G	CBL-PWR-C15M-HITEMP-IL
India	250 VAC, 10 A, 50 Hz	SABS 164/1:1992 Type ZA/3	CBL-PWR-C15M-HITEMP-IN
Italy	250 VAC, 10 A, 50 Hz	CEI 23-16 Type I/3G	CBL-PWR-C15M-HITEMP-IT
Japan	125 VAC, 15 A, 50 Hz or 60 Hz	JIS 8303 Type 498GJ	CBL-PWR-C15M-HITEMP-JP
Korea	250 VAC, 10 A, 50 Hz	CEE (7) VII Type VIIG	CBL-PWR-C15M-HITEMP-KR
South Africa	250 VAC, 10 A, 50 Hz	SABS 164/1:1992 Type ZA/3	CBL-PWR-C15M-HITEMP-SA
North America	125 VAC, 15 A, 60 Hz	NEMA 5-15 Type N5/15	CBL-PWR-C15M-HITEMP-US
Switzerland	250 VAC, 10 A, 50 Hz	SEV 1011 / 6534-2 Type 12G	CBL-PWR-C15M-HITEMP-SZ
United Kingdom	250 VAC, 10 A, 50 Hz	BS 1363/A Type BS89/13	CBL-PWR-C15M-HITEMP-UK

Copyright © 2018, Juniper Networks, Inc.

CAUTION: The AC power cord for the EX4300 switch is intended for use with this switch only. Do not use the cord with any other product.

CAUTION: Power cords must not block access to switch components.

Related Documentation

- *Connecting AC Power to an EX4300 Switch*

DC Power Supply Specifications for EX4300 Switches

Table 119 on page 302 lists the power supply specifications for a DC power supply used in an EX4300 switch.

NOTE: EX4300-24T, EX4300-24P, EX4300-32F, EX4300-48T, EX4300-48T-AFI, EX4300-48P, EX4300-48MP, and EX4300-48MP-S models do not support DC power. EX4300-24T-S, EX4300-24P-S, EX4300-32F-S, EX4300-32F-DC, EX4300-48T-S, EX4300-48T-DC, EX4300-48T-DC-AFI, and EX4300-48P-S models support DC power.

Table 126: Power Supply Specifications for DC Power Supplies for EX4300 Switches

Item	Specifications
DC input voltage	• Nominal operating voltage: –48 VDC • Operating voltage range: –48 VDC through –60 VDC
DC input current rating	4 A maximum at nominal operating voltage (–48 VDC)
Output power	550 W

Related Documentation

- DC Power Supply in EX4300 Switches on page 170
- DC Power Supply LEDs in EX4300 Switches on page 779

Copyright © 2018, Juniper Networks, Inc.

CHAPTER 19

Planning EX4200 Power Requirements

- Power Specifications for EX4200 Switches on page 311
- AC Power Cord Specifications for EX4200 Switches on page 312

Power Specifications for EX4200 Switches

This topic describes power specifications for power supplies for EX4200 switches.

Table 127 on page 311 provides the AC power supply electrical specifications for EX4200 switches.

Table 128 on page 311 provides the DC power supply electrical specifications for EX4200 switches.

NOTE: **This topic uses the term PoE to refer to both PoE and PoE+ unless there is a need to distinguish between the two.**

Table 127: AC Power Supply Electrical Specifications

Item	Specification
AC input voltage	100 through 240 VAC
AC input line frequency	50 through 60 Hz
AC system current rating	• 4 A (for switches with 8 ports equipped for Power over Ethernet (PoE) or the switch with 24 100Base-FX/1000Base-SX SFP ports) • 7 A (for switches with 24 ports equipped for PoE) • 12 A (for switches with 48 ports equipped for PoE)

Table 128: DC Power Supply Electrical Specifications

Item	Specification
DC input voltage	36 through 72 VDC
DC input current	7 A maximum

Copyright © 2018, Juniper Networks, Inc.

Table 128: DC Power Supply Electrical Specifications (continued)

Item	Specification
Power supply output	190 W
Output holdup time	1 ms minimum

NOTE: The DC power supply in EX4200 switches does not support Power over Ethernet (PoE); you can use either an external power injector or an AC power supply to supply power to PoE devices that you connect to the switch.

NOTE: For DC power supplies, we recommend that you provide at least 7.5 A at 48 VDC and use a facility circuit breaker rated for 10 A minimum. Doing so enables you to operate the switch in any configuration without upgrading the power infrastructure, and ensures that the switch functions at full capacity using multiple power supplies.

Related Documentation

- AC Power Cord Specifications for EX4200 Switches on page 312
- Power Supply in EX4200 Switches on page 188
- General Safety Guidelines and Warnings on page 329
- General Electrical Safety Guidelines and Warnings on page 359

AC Power Cord Specifications for EX4200 Switches

A detachable AC power cord is supplied with the AC power supplies. The coupler is type C13 as described by International Electrotechnical Commission (IEC) standard 60320. The plug at the male end of the power cord fits into the power source outlet that is standard for your geographical location.

CAUTION: The AC power cord provided with each power supply is intended for use with that power supply only and not for any other use.

NOTE: In North America, AC power cords must not exceed 4.5 meters in length, to comply with National Electrical Code (NEC) Sections 400-8 (NFPA 75, 5-2.2) and 210-52 and Canadian Electrical Code (CEC) Section 4-010(3). The cords supplied with the switch are in compliance.

Table 129 on page 313 gives the AC power cord specifications for the countries and regions listed in the table.

Copyright © 2018, Juniper Networks, Inc.

Table 129: AC Power Cord Specifications

Country/Region	Electrical Specifications	Plug Standards	Juniper Model Number
Argentina	250 VAC, 10 A, 50 Hz	IRAM 2073 Type RA/3	CBL-EX-PWR-C13-AR
Australia	250 VAC, 10 A, 50 Hz	AS/NZZS 3112 Type SAA/3	CBL-EX-PWR-C13-AU
Brazil	250 VAC, 10 A, 50 Hz	NBR 14136 Type BR/3	CBL-EX-PWR-C13-BR
China	250 VAC, 10 A, 50 Hz	GB 1002-1996 Type PRC/3	CBL-EX-PWR-C13-CH
Europe (except Italy, Switzerland, and United Kingdom)	250 VAC, 10 A, 50 Hz	CEE (7) VII Type VIIG	CBL-EX-PWR-C13-EU
India	250 VAC, 10 A, 50 Hz	IS 1293 Type IND/3	CBL-EX-PWR-C13-IN
Israel	250 VAC, 10 A, 50 Hz	SI 32/1971 Type IL/3G	CBL-EX-PWR-C13-IL
Italy	250 VAC, 10 A, 50 Hz	CEI 23-16 Type I/3G	CBL-EX-PWR-C13-IT
Japan	125 VAC, 12 A, 50 Hz or 60 Hz	SS-00259 Type VCTF	CBL-EX-PWR-C13-JP
Korea	250 VAC, 10 A, 50 Hz or 60 Hz	CEE (7) VII Type VIIGK	CBL-EX-PWR-C13-KR
North America	125 VAC, 13 A, 60 Hz	NEMA 5-15 Type N5-15	CBL-EX-PWR-C13-US
South Africa	250 VAC, 10 A, 50 Hz	SABS 164/1:1992 Type ZA/13	CBL-EX-PWR-C13-SA
Switzerland	250 VAC, 10 A, 50 Hz	SEV 6534-2 Type 12G	CBL-EX-PWR-C13-SZ
Taiwan	125 VAC, 11 A and 15 A, 50 Hz	NEMA 5-15P Type N5-15P	CBL-EX-PWR-C13-TW
United Kingdom	250 VAC, 10 A, 50 Hz	BS 1363/A Type BS89/13	CBL-EX-PWR-C13-UK

Figure 145 on page 313 illustrates the plug on the power cord for some of the countries or regions listed in Table 129 on page 313.

Figure 145: AC Plug Types

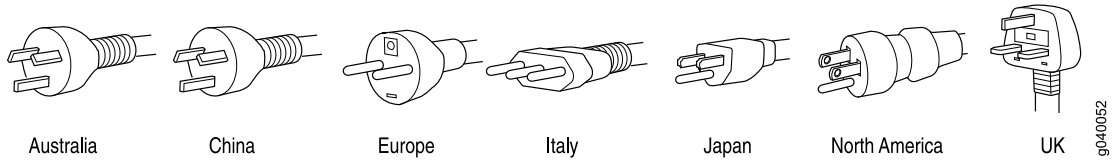

Related Documentation

- Power Supply in EX4200 Switches on page 188
- General Safety Guidelines and Warnings on page 329
- General Electrical Safety Guidelines and Warnings on page 359

- Prevention of Electrostatic Discharge Damage on page 360

Copyright © 2018, Juniper Networks, Inc.

CHAPTER 20

Compliance

- Agency Approvals for the QFX Series on page 315
- Agency Approvals for EX Series Switches on page 316
- Compliance Statements for EMC Requirements for the QFX Series on page 317
- Compliance Statements for EMC Requirements for EX Series Switches on page 320
- Compliance Statements for Acoustic Noise for EX Series Switches on page 324
- Statements of Volatility for Juniper Network Devices on page 324

Agency Approvals for the QFX Series

The QFX Series complies with the following standards:

- Safety
  - CAN/CSA-C22.2 No. 60950-1 Safety of Information Technology Equipment
  - UL 60950-1 Information Technology Equipment - Safety - Part 1: General Requirements
  - EN 60950-1 European Norm, Safety of Information Technology Equipment
  - IEC 60950-1 Information Technology Equipment - Safety - Part 1: General Requirements (with country deviations)
  - EN 60825-1 Safety of Laser Products - Part 1: Equipment Classification, Requirements and User's Guide
- EMC
  - EN 55032, Class A
  - CISPR 22, CISPR32, Class A
  - Australian Communications and Media Authority (ACMA) AS/NZS CISPR 32: Class A
  - FCC Part 15, Subpart B, for Class A digital devices
  - Industry Canada ICES 003, Class A
  - VCCI Regulations for Voluntary Control Measures of Radio Interference Generated by Information Technology Equipment, (Class A).

- EN 300 386, Class A
- EN 61000-3-2 Power Line Harmonics
- EN 61000-3-3 Voltage Fluctuations and Flicker
- EN 55024
- CISPR 24
- BSMI, Class A
- CNS 13438

Related Documentation

- Compliance Statements for EMC Requirements for the QFX Series on page 317

Agency Approvals for EX Series Switches

This topic applies to hardware devices in the EX Series product family, which includes EX Series switches, the EX Series Redundant Power System (RPS), and the XRE200 External Routing Engine.

These hardware devices comply with the following standards:

- Safety
  - CAN/CSA-C22.2 No. 60950-1 Safety of Information Technology Equipment
  - UL 60950-1 Information Technology Equipment - Safety - Part 1: General Requirements
  - EN 60950-1 European Norm, Safety of Information Technology Equipment
  - IEC 60950-1 Information Technology Equipment - Safety - Part 1: General Requirements (with country deviations)
  - EN 60825-1 Safety of Laser Products - Part 1: Equipment Classification, Requirements, and User's Guide
- EMC
  - EN 55032 Class A Emission
  - AS/NZS CISPR 32 Class A (Australia/New Zealand)
  - CISPR 22 Class A
  - BSMI CNS 13438 (Taiwan)
  - FCC 47CFR Part 15 Class A (USA)
  - EN 55022 Class A Emissions (Europe)
  - ICES-003 Class A
  - VCCI Class A (Japan)
  - TEC/SD/DD/EMC-221/05/OCT-16 (India EMC Standard)

Copyright © 2018, Juniper Networks, Inc.

- KN 32 and KN 35 (Korea)
- KN 61000 (Korea Immunity)
- EN 55024
- EN 300386
- EN 61000-3-2 Power Line Harmonics
- EN 61000-3-3 Voltage Fluctuations and Flicker
- EN 61000-4-2 ESD
- EN 61000-4-3 Radiated Immunity
- EN 61000-4-4 EFT
- EN 61000-4-5 Surge
- EN 61000-4-6 Low Frequency Common Immunity
- EN 61000-4-11 Voltage Dips and Sags

Compliance Statements for EMC Requirements for the QFX Series

This topic describes the EMC requirements for the QFX Series.

- Canada on page 317
- European Community on page 318
- Israel on page 318
- Japan on page 318
- Korea on page 319
- Tawain on page 319
- United States on page 319
- Nonregulatory Environmental Standards on page 319

Canada

This Class A digital apparatus complies with Canadian ICES-003.

Cet appareil numérique de la classe A est conforme à la norme NMB-003 du Canada.

The Industry Canada label identifies certified equipment. This certification means that the equipment meets certain telecommunications network protective, operational, and safety requirements. Industry Canada does not guarantee the equipment will operate to the users' satisfaction.

Before installing this equipment, users should ensure that it is permissible to connect the equipment to the facilities of the local telecommunications company. The equipment must also be installed using an acceptable method of connection. In some cases, the inside wiring associated with a single line individual service may be extended by means

of a certified connector assembly. The customer should be aware that compliance with the above conditions may not prevent degradation of service in some situations.

Repairs to certified equipment should be made by an authorized Canadian maintenance facility designated by the supplier. Any repairs or alterations made by the user to this equipment, or equipment malfunctions, may give the telecommunications company cause to request the user to disconnect the equipment.

CAUTION: **Users should not attempt to make electrical ground connections by themselves, but should contact the appropriate inspection authority or an electrician, as appropriate.**

Users should ensure for their own protection that the electrical ground connections of the power utility, telephone lines, and internal metallic water pipe system, if present, are connected together. This precaution may be particularly important in rural areas.

European Community

This is a Class A product. In a domestic environment this product may cause radio interference in which case the user may be required to take adequate measures.

Israel

אזהרה

מוצר זה הוא מוצר Class A.
בסביבה ביתית,מוצר זה עלול לגרום הפרעות בתדר רדיו,ובמקרה זה, המשתמש עשוי להידרש לנקוט אמצעים מתאימים.

Translation from Hebrew–Warning: This product is Class A. In residential environments, the product may cause radio interference, and in such a situation, the user may be required to take adequate measures.

Japan

この装置は、クラス A 情報技術装置です。この装置を家庭環境で使用すると電波妨害を引き起こすことがあります。この場合には使用者が適切な対策を講ずるよう要求されることがあります。 VCCI-A

The preceding translates as follows:

This is a Class A product. In a domestic environment this product may cause radio interference in which case the user may be required to take adequate measures.

VCCI-A

Copyright © 2018, Juniper Networks, Inc.

Korea

이 기기는 업무용(A급) 전자파적합기기로서 판매자 또는 사용자는 이 점을 주의하시기 바라며, 가정외의 지역에서 사용하는 것을 목적으로 합니다.

Korean Class A Warning g040913

The preceding translates as follows:

This equipment is Industrial (Class A) electromagnetic wave suitability equipment and seller or user should take notice of it, and this equipment is to be used in the places except for home.

Tawain

警告使用者：
這是甲類的資訊產品, 在居住的環境中使用 時, 可能會造成射頻干擾, 在這種情況下, 使用者會被要求采取某些適當的對策。

Chinese Class A warning g100090

The preceding translates as follows:

This is Class A product. In a domestic environment this product may cause radio interference in which case the user may be required to take adequate measures.

United States

The QFX Series device has been tested and found to comply with the limits for a Class A digital device, pursuant to Part 15 of the FCC Rules. These limits are designed to provide reasonable protection against harmful interference when the equipment is operated in a commercial environment. This equipment generates, uses, and can radiate radio frequency energy and, if not installed and used in accordance with the instruction manual, may cause harmful interference to radio communications. Operation of this equipment in a residential area is likely to cause harmful interference in which case the user will be required to correct the interference at his own expense.

Nonregulatory Environmental Standards

These QFX Series product SKUs are designed to be Network Equipment Building System (NEBS) compliant:

- QFX3008-I
- QFX3600-I
- QFX3600
- QFX3500
- QFX5100
- QFX5110
- QFX5200-32C
- QFX10002-36Q and QFX10002-72Q
- QFX10008
- QFX10016

Those device product SKUs are designed to meet the following NEBS compliance standards:

- SR-3580 NEBS Criteria Levels (Level 3 Compliance)
- GR-1089-CORE, Issue 6: EMC and Electrical Safety—Generic Criteria for Network Telecommunications Equipment
  - The equipment is suitable for installation in locations where the National Electrical Code (NEC) applies.
  - The battery return connection is to be treated as an Isolated DC return (DC-I), as defined in GR-1089-CORE.
- GR-63-CORE: NEBS, Physical Protection
  - The equipment is suitable for installation as part of the Common Bonding Network (CBN).
  - The equipment is suitable for installation in a central office (CO).

Related Documentation

- Agency Approvals for the QFX Series on page 315

Compliance Statements for EMC Requirements for EX Series Switches

This topic applies to hardware devices in the EX Series product family, which includes EX Series switches, the EX Series Redundant Power System (RPS), and the XRE200 External Routing Engine.

This topic describes the EMC requirements for these hardware devices.

- Canada on page 321
- Taiwan on page 321
- European Community on page 322
- Israel on page 322

Copyright © 2018, Juniper Networks, Inc.

- Japan on page 322
- Korea on page 322
- United States on page 323
- FCC Part 15 Statement on page 323
- Nonregulatory Environmental Standards on page 323

Canada

This Class A digital apparatus complies with Canadian ICES-003.

Cet appareil numérique de la classe A est conforme à la norme NMB-003 du Canada.

The Industry Canada label identifies certified equipment. This certification means that the equipment meets certain telecommunications network protective, operational, and safety requirements. Industry Canada does not guarantee the equipment will operate to the users' satisfaction.

Before installing this equipment, users should ensure that it is permissible to connect the equipment to the facilities of the local telecommunications company. The equipment must also be installed using an acceptable method of connection. In some cases, the inside wiring associated with a single line individual service can be extended by means of a certified connector assembly. The customer should be aware that compliance with the above conditions might not prevent degradation of service in some situations.

Repairs to certified equipment should be made by an authorized Canadian maintenance facility designated by the supplier. Any repairs or alterations made by the user to this equipment, or equipment malfunctions, might give the telecommunications company cause to request the user to disconnect the equipment.

CAUTION: **Users should not attempt to make electrical ground connections by themselves, but should contact the appropriate inspection authority or an electrician, as appropriate.**

Users should ensure for their own protection that the electrical ground connections of the power utility, telephone lines, and internal metallic water pipe system, if present, are connected together. This precaution might be particularly important in rural areas.

Taiwan

此為甲類資訊技術設備。於一般家居環境使用時，本設備可能導致射頻干擾，用戶請採取相應措施。

The preceding translates as follows:

This is a Class A device. In a domestic environment, this device might cause radio interference, in which case the user needs to take adequate measures.

European Community

This is a Class A device. In a domestic environment this device might cause radio interference, in which case the user needs to take adequate measures.

Israel

אזהרה

מוצר זה הוא מוצר Class A.
בסביבה ביתית,מוצר זה עלול לגרום הפרעות בתדר רדיו,ובמקרה זה, המשתמש עשוי להידרש לנקוט אמצעים מתאימים.

The preceding translates as follows:

Warning: This product is Class A. In residential environments, the product may cause radio interference, and in such a situation, the user may be required to take adequate measures.

Japan

この装置は、クラス A 情報技術装置です。この装置を家庭環境で使用すると電波妨害を引き起こすことがあります。この場合には使用者が適切な対策を講ずるよう要求されることがあります。 VCCI-A

The preceding translates as follows:

This is a Class A device. In a domestic environment this device might cause radio interference, in which case the user needs to take adequate measures.

VCCI-A

Korea

이 기기는 업무용(A급) 전자파적합기기로서 판매자 또는 사용자는 이 점을 주의하시기 바라며, 가정외의 지역에서 사용하는 것을 목적으로 합니다.

Korean Class A Warning g040913

The preceding translates as follows:

This equipment is Industrial (Class A) electromagnetic wave suitability equipment and seller or user should take notice of it, and this equipment is to be used in the places except for home

Copyright © 2018, Juniper Networks, Inc.

United States

The device has been tested and found to comply with the limits for a Class A digital device, pursuant to Part 15 of the FCC Rules. These limits are designed to provide reasonable protection against harmful interference when the equipment is operated in a commercial environment. This equipment generates, uses, and can radiate radio frequency energy and, if not installed and used in accordance with the instruction manual, might cause harmful interference to radio communications. Operation of this equipment in a residential area is likely to cause harmful interference, in which case users need to correct the interference at their own expense.

FCC Part 15 Statement

This equipment has been tested and found to comply with the limits for a Class A digital device pursuant to Part 15 of the FCC Rules. These limits are designed to provide reasonable protection against harmful interference in a residential installation. This equipment generates, uses, and can radiate radio frequency energy and, if not installed and used in accordance with the instructions, might cause harmful interference to radio communications. However, there is no guarantee that interference will not occur in a particular installation.

If this equipment does cause harmful interference to radio or television reception, which can be determined by turning the equipment off and on, the user is encouraged to try and correct the interference by one or more of the following measures:

- Reorient or relocate the receiving antenna.
- Increase the separation between the equipment and the receiver.
- Connect the equipment into an outlet on a circuit different from that to which the receiver is connected.
- Consult the dealer or an experienced radio or TV technician for help.

Nonregulatory Environmental Standards

NEBS compliance—These EX Series switches are Network Equipment Building System (NEBS) compliant:

- EX2200-24T and EX2200-48T
- EX3200-24T, EX3200-48T
- EX3300-24T, EX3300-48T
- EX4200-24T, EX4200-24F, EX4200-24F-S, EX4200-48T and EX4200-48T-S
- EX4300-24T, EX4300-24T-S, EX4300-24P, EX4300-24P-S, EX4300-32F, EX4300-32F-S, EX4300-48T, EX4300-48T-AFI, EX4300-48T-S, EX4300-48P, and EX4300-48P-S
- All EX4500 switches with AC power supplies
- EX4550-32T-AFO, EX4550-32T-AFI, EX4550-32F-AFO, EX4550-32F-AFI, and EX4550-32F-S

Copyright © 2018, Juniper Networks, Inc.

- EX4600-40F and EX4600-40F-S
- All EX6200 switches

NOTE: **For the EX6200-48P line cards, the intrabuilding ports must use shielded intrabuilding cabling or wiring that is grounded at both ends.**

- All EX8200 switches
- EX9251
- EX9253

These switches meet the following NEBS compliance standards:

- SR-3580 NEBS Criteria Levels (Level 4 Compliance)
- GR-1089-CORE: EMC and Electrical Safety for Network Telecommunications Equipment
- GR-63-CORE: NEBS, Physical Protection
  - The equipment is suitable for installation as part of the Common Bonding Network (CBN).
  - The equipment is suitable for installation in locations where the National Electrical Code (NEC) applies.
  - The battery return connection is to be treated as an Isolated DC return (DC-I), as defined in GR-1089-CORE.
  - You must provision a readily accessible device outside of the equipment to disconnect power. The device must also be rated based on local electrical code practice.

Compliance Statements for Acoustic Noise for EX Series Switches

This topic applies to hardware devices in the EX Series product family, which includes EX Series switches, the EX Series Redundant Power System (RPS), and the XRE200 External Routing Engine.

Maschinenlärminformations-Verordnung - 3. GPSGV, der höchste Schalldruckpegel beträgt 70 dB(A) oder weniger gemäss EN ISO 7779

Translation:

The emitted sound pressure is below 70 dB(A) per EN ISO 7779.

Statements of Volatility for Juniper Network Devices

A *statement of volatility*—sometimes known as *letter of volatility*—identifies the volatile and non-volatile storage components in Juniper Networks devices, and describes how to remove non-volatile storage components from the device.

Copyright © 2018, Juniper Networks, Inc.

NOTE: Statements of volatility are not available for all Juniper Networks devices.

EX series:

- EX2200 and EX2200-C
- EX2300-24P, EX2300-24T, and EX2300-24T-DC
- EX2300-48P and EX2300-48T
- EX2300-C
- EX3300
- EX3400-24P, EX3400-24T, EX3400-24T-DC
- EX3400-48P, EX3400-48T, EX3400-48T-AFI
- EX4200
- EX4300
- EX4500
- EX4550
- EX4600
- EX8200

MX series:

- RE-S-X6-64G Routing Engine

QFX series:

- QFX3008-I
- QFX3100
- QFX3500
- QFX3600
- QFX5100-24Q
- QFX5100-48S6Q
- QFX10008 and QFX10016

SRX series:

- SRX100
- SRX110
- SRX210B
- SRX210H-POE

Copyright © 2018, Juniper Networks, Inc.

- SRX220
- SRX240H
- SRX300
- SRX320
- SRX340 and SRX345
- SRX550
- SRX650
- SRX1400
- SRX1500
- SRX3400 and SRX3600
- SRX5400, SRX5600, and SRX5800
- SRX-MP-1SERIAL
- SSG-520M

Copyright © 2018, Juniper Networks, Inc.

PART 3

Safety

- General Safety Guidelines and Warnings on page 329
- Fire Safety Requirements on page 335
- Installation and Maintenance Safety Information on page 337
- Radiation and Laser Warnings on page 349
- Maintenance and Operational Safety Warnings on page 353
- Power and Electrical Safety Information on page 359

Copyright © 2018, Juniper Networks, Inc.

CHAPTER 21

General Safety Guidelines and Warnings

- General Safety Guidelines and Warnings on page 329
- Definitions of Safety Warning Levels on page 330
- Qualified Personnel Warning on page 332
- Warning Statement for Norway and Sweden on page 333

General Safety Guidelines and Warnings

The following guidelines help ensure your safety and protect the device from damage. The list of guidelines might not address all potentially hazardous situations in your working environment, so be alert and exercise good judgment at all times.

- Perform only the procedures explicitly described in the hardware documentation for this device. Make sure that only authorized service personnel perform other system services.
- Keep the area around the device clear and free from dust before, during, and after installation.
- Keep tools away from areas where people could trip over them while walking.
- Do not wear loose clothing or jewelry, such as rings, bracelets, or chains, which could become caught in the device.
- Wear safety glasses if you are working under any conditions that could be hazardous to your eyes.
- Do not perform any actions that create a potential hazard to people or make the equipment unsafe.
- Never attempt to lift an object that is too heavy for one person to handle.
- Never install or manipulate wiring during electrical storms.
- Never install electrical jacks in wet locations unless the jacks are specifically designed for wet environments.
- Operate the device only when it is properly grounded.
- Ensure that the separate protective earthing terminal provided on this device is permanently connected to earth.
- Replace fuses only with fuses of the same type and rating.

Copyright © 2018, Juniper Networks, Inc.

- Do not open or remove chassis covers or sheet-metal parts unless instructions are provided in the hardware documentation for this device. Such an action could cause severe electrical shock.
- Do not push or force any objects through any opening in the chassis frame. Such an action could result in electrical shock or fire.
- Avoid spilling liquid onto the chassis or onto any device component. Such an action could cause electrical shock or damage the device.
- Avoid touching uninsulated electrical wires or terminals that have not been disconnected from their power source. Such an action could cause electrical shock.
- Some parts of the chassis, including AC and DC power supply surfaces, power supply unit handles, SFB card handles, and fan tray handles might become hot. The following label provides the warning of the hot surfaces on the chassis:

- Always ensure that all modules, power supplies, and cover panels are fully inserted and that the installation screws are fully tightened.

Definitions of Safety Warning Levels

The documentation uses the following levels of safety warnings (there are two *Warning* formats):

NOTE: You might find this information helpful in a particular situation, or you might overlook this important information if it was not highlighted in a Note.

CAUTION: You need to observe the specified guidelines to prevent minor injury or discomfort to you or severe damage to the device.

WARNING: This symbol alerts you to the risk of personal injury from a laser.

WARNING: This symbol means danger. You are in a situation that could cause bodily injury. Before you work on any equipment, be aware of the hazards involved with electrical circuitry and be familiar with standard practices for preventing accidents.

Waarschuwing Dit waarschuwingssymbool betekent gevaar. U verkeert in een situatie die lichamelijk letsel kan veroorzaken. Voordat u aan enige

Copyright © 2018, Juniper Networks, Inc.

apparatuur gaat werken, dient u zich bewust te zijn van de bij elektrische schakelingen betrokken risico's en dient u op de hoogte te zijn van standaard maatregelen om ongelukken te voorkomen.

Varoitus Tämä varoitusmerkki merkitsee vaaraa. Olet tilanteessa, joka voi johtaa ruumiinvammaan. Ennen kuin työskentelet minkään laitteiston parissa, ota selvää sähkökytkentöihin liittyvistä vaaroista ja tavanomaisista onnettomuuksien ehkäisykeinoista.

Attention Ce symbole d'avertissement indique un danger. Vous vous trouvez dans une situation pouvant causer des blessures ou des dommages corporels. Avant de travailler sur un équipement, soyez conscient des dangers posés par les circuits électriques et familiarisez-vous avec les procédures couramment utilisées pour éviter les accidents.

Warnung Dieses Warnsymbol bedeutet Gefahr. Sie befinden sich in einer Situation, die zu einer Körperverletzung führen könnte. Bevor Sie mit der Arbeit an irgendeinem Gerät beginnen, seien Sie sich der mit elektrischen Stromkreisen verbundenen Gefahren und der Standardpraktiken zur Vermeidung von Unfällen bewußt.

Avvertenza Questo simbolo di avvertenza indica un pericolo. La situazione potrebbe causare infortuni alle persone. Prima di lavorare su qualsiasi apparecchiatura, occorre conoscere i pericoli relativi ai circuiti elettrici ed essere al corrente delle pratiche standard per la prevenzione di incidenti.

Advarsel Dette varselsymbolet betyr fare. Du befinner deg i en situasjon som kan føre til personskade. Før du utfører arbeid på utstyr, må du vare oppmerksom på de faremomentene som elektriske kretser innebærer, samt gjøre deg kjent med vanlig praksis når det gjelder å unngå ulykker.

Aviso Este símbolo de aviso indica perigo. Encontra-se numa situação que lhe poderá causar danos físicos. Antes de começar a trabalhar com qualquer equipamento, familiarize-se com os perigos relacionados com circuitos eléctricos, e com quaisquer práticas comuns que possam prevenir possíveis acidentes.

¡Atención! Este símbolo de aviso significa peligro. Existe riesgo para su integridad física. Antes de manipular cualquier equipo, considerar los riesgos que entraña la corriente eléctrica y familiarizarse con los procedimientos estándar de prevención de accidentes.

Varning! Denna varningssymbol signalerar fara. Du befinner dig i en situation som kan leda till personskada. Innan du utför arbete på någon utrustning måste du vara medveten om farorna med elkretsar och känna till vanligt förfarande för att förebygga skador.

Related Documentation

- *Laser and LED Safety Guidelines and Warnings for the ACX5000 Router*

- Laser and LED Safety Guidelines and Warnings for the QFX Series on page 350
- *Laser and LED Safety Guidelines and Warnings for the PTX10008 and PTX10016*

Qualified Personnel Warning

WARNING: **Only trained and qualified personnel should install or replace the device.**

Waarschuwing Installatie en reparaties mogen uitsluitend door getraind en bevoegd personeel uitgevoerd worden.

Varoitus Ainoastaan koulutettu ja pätevä henkilökunta saa asentaa tai vaihtaa tämän laitteen.

Attention Tout installation ou remplacement de l'appareil doit être réalisé par du personnel qualifié et compétent.

Warnung Gerät nur von geschultem, qualifiziertem Personal installieren oder auswechseln lassen.

Avvertenza Solo personale addestrato e qualificato deve essere autorizzato ad installare o sostituire questo apparecchio.

Advarsel Kun kvalifisert personell med riktig opplæring bør montere eller bytte ut dette utstyret.

Aviso Este equipamento deverá ser instalado ou substituído apenas por pessoal devidamente treinado e qualificado.

¡Atención! Estos equipos deben ser instalados y reemplazados exclusivamente por personal técnico adecuadamente preparado y capacitado.

Varning! Denna utrustning ska endast installeras och bytas ut av utbildad och kvalificerad personal.

Related Documentation

- *PTX5000 AC Power Electrical Safety Guidelines*
- *PTX5000 AC Power Electrical Safety Warnings*
- *PTX1000 DC Power Electrical Safety Guidelines*
- *PTX3000 DC Power Electrical Safety Guidelines*
- *PTX5000 DC Power Electrical Safety Guidelines*

Copyright © 2018, Juniper Networks, Inc.

Warning Statement for Norway and Sweden

WARNING: The equipment must be connected to an earthed mains socket-outlet.

Advarsel Apparatet skal kobles til en jordet stikkontakt.

Varning! Apparaten skall anslutas till jordat nätuttag.

Copyright © 2018, Juniper Networks, Inc.

CHAPTER 22

Fire Safety Requirements

- Fire Safety Requirements on page 335

Fire Safety Requirements

In the event of a fire emergency, the safety of people is the primary concern. You should establish procedures for protecting people in the event of a fire emergency, provide safety training, and properly provision fire-control equipment and fire extinguishers.

In addition, you should establish procedures to protect your equipment in the event of a fire emergency. Juniper Networks products should be installed in an environment suitable for electronic equipment. We recommend that fire suppression equipment be available in the event of a fire in the vicinity of the equipment and that all local fire, safety, and electrical codes and ordinances be observed when you install and operate your equipment.

Fire Suppression

In the event of an electrical hazard or an electrical fire, you should first turn power off to the equipment at the source. Then use a Type C fire extinguisher, which uses noncorrosive fire retardants, to extinguish the fire.

Fire Suppression Equipment

Type C fire extinguishers, which use noncorrosive fire retardants such as carbon dioxide and Halotron™, are most effective for suppressing electrical fires. Type C fire extinguishers displace oxygen from the point of combustion to eliminate the fire. For extinguishing fire on or around equipment that draws air from the environment for cooling, you should use this type of inert oxygen displacement extinguisher instead of an extinguisher that leaves residues on equipment.

Do not use multipurpose Type ABC chemical fire extinguishers (dry chemical fire extinguishers). The primary ingredient in these fire extinguishers is monoammonium phosphate, which is very sticky and difficult to clean. In addition, in the presence of minute amounts of moisture, monoammonium phosphate can become highly corrosive and corrodes most metals.

Any equipment in a room in which a chemical fire extinguisher has been discharged is subject to premature failure and unreliable operation. The equipment is considered to be irreparably damaged.

Copyright © 2018, Juniper Networks, Inc.

NOTE: To keep warranties effective, do not use a dry chemical fire extinguisher to control a fire at or near a Juniper Networks device. If a dry chemical fire extinguisher is used, the unit is no longer eligible for coverage under a service agreement.

We recommend that you dispose of any irreparably damaged equipment in an environmentally responsible manner.

Copyright © 2018, Juniper Networks, Inc.

CHAPTER 23

Installation and Maintenance Safety Information

- Installation Instructions Warning on page 337
- Chassis Lifting Guidelines for a QFX3100 Director Device on page 338
- Chassis Lifting Guidelines for a QFX3008-I Interconnect Device on page 338
- Chassis Lifting Guidelines for a QFX5100 Device on page 339
- Chassis Lifting Guidelines for a QFX3600 or QFX3600-I Device on page 340
- Chassis Lifting Guidelines for a QFX3500 Device on page 340
- Chassis Lifting Guidelines for EX4300 Switches on page 341
- Chassis Lifting Guidelines for EX4200 Switches on page 341
- Restricted Access Warning on page 342
- Ramp Warning on page 343
- Rack-Mounting and Cabinet-Mounting Warnings on page 343
- Grounded Equipment Warning on page 347

Installation Instructions Warning

WARNING: Read the installation instructions before you connect the device to a power source.

Waarschuwing Raadpleeg de installatie-aanwijzingen voordat u het systeem met de voeding verbindt.

Varoitus Lue asennusohjeet ennen järjestelmän yhdistämistä virtalähteeseen.

Attention Avant de brancher le système sur la source d'alimentation, consulter les directives d'installation.

Warnung Lesen Sie die Installationsanweisungen, bevor Sie das System an die Stromquelle anschließen.

Avvertenza Consultare le istruzioni di installazione prima di collegare il sistema all'alimentatore.

Copyright © 2018, Juniper Networks, Inc.

Advarsel Les installasjonsinstruksjonene før systemet kobles til strømkilden.

Aviso Leia as instruções de instalação antes de ligar o sistema à sua fonte de energia.

¡Atención! Ver las instrucciones de instalación antes de conectar el sistema a la red de alimentación.

Varning! Läs installationsanvisningarna innan du kopplar systemet till dess strömförsörjningsenhet.

Related Documentation

- *Laser and LED Safety Guidelines and Warnings for the ACX5000 Router*

Chassis Lifting Guidelines for a QFX3100 Director Device

The weight of a fully loaded QFX3100 Director device chassis is approximately 41.2 lb (18.7 kg). Observe the following guidelines for lifting and moving a QFX3100 Director device:

- Before installing a QFX3100 Director device, read the guidelines in "Site Preparation Checklist for a QFX3100 Director Device" on page 208 to verify that the intended site meets the specified power, environmental, and clearance requirements.
- Before lifting or moving the QFX3100 Director device, disconnect all external cables.
- As when lifting any heavy object, lift most of the weight with your legs rather than your back. Keep your knees bent and your back relatively straight and avoid twisting your body as you lift. Balance the load evenly and be sure that your footing is solid.

Related Documentation

- General Safety Guidelines and Warnings on page 329
- Installation Instructions Warning on page 337
- Mounting a QFX3100 Director Device on Two Posts in a Rack or Cabinet on page 380
- Mounting a QFX3100 Director Device on Four Posts in a Rack or Cabinet on page 381

Chassis Lifting Guidelines for a QFX3008-I Interconnect Device

The weight of a fully loaded QFX3008-I Interconnect device is approximately 650 lb (295 kg). Observe the following guidelines for lifting and moving the device:

- Before moving the device to a site, ensure that the site meets the power, environmental, and clearance requirements specified in the "Site Preparation Checklist for a QFX3008-I Interconnect Device" on page 210.
- Do not attempt to lift the QFX3008-I Interconnect device by yourself. We recommend using a mechanical lift rated for at least 750 lb (340.2 kg) to install the QFX3008 device in a rack or cabinet. If you do not have a lift rated for 750 lb (341 kg), you must

 Copyright © 2018, Juniper Networks, Inc.

remove all components from the chassis and use a lift rated for at least 250 lb (114 kg). The weight of an empty QFX3008-I Interconnect device and midplane is approximately 205 lb (93 kg).

WARNING: **Because of the QFX3008-I Interconnect device size and weight, we require the use of a mechanical lift to install the QFX3008-I Interconnect device in a rack or cabinet or to move the device from one location to another.**

CAUTION: **The handles on the QFX3008-I Interconnect device are designed to help maneuver the chassis from the mechanical lift to the mounting shelves in the rack. Do not attempt to lift the chassis using the handles.**

- Before lifting or moving the device, disconnect all external cables and wires.

Related Documentation

- Chassis Physical Specifications for a QFX3008-I Interconnect Device on page 45
- General Safety Guidelines and Warnings on page 329
- Installation Instructions Warning on page 337

Chassis Lifting Guidelines for a QFX5100 Device

The weight of a 1 U fully loaded QFX5100 switch chassis is approximately 30.8 lb (14 kg); the 2 U product SKU is approximately 32 lbs (14.5 kg). Observe the following guidelines for lifting and moving a QFX5100 switch:

CAUTION: **If you are installing the QFX5100 switch above 60 in. (152.4 cm) from the floor, either remove the power supplies, fan modules, and any expansion modules before attempting to install the switch, or ask someone to assist you during the installation.**

- Before installing a QFX5100 switch, read the guidelines in "Site Preparation Checklist for a QFX5100 Device" on page 211 to verify that the intended site meets the specified power, environmental, and clearance requirements.
- Before lifting or moving the QFX5100 switch, disconnect all external cables.
- As when lifting any heavy object, lift most of the weight with your legs rather than your back. Keep your knees bent and your back relatively straight and avoid twisting your body as you lift. Balance the load evenly and be sure that your footing is solid.

Related Documentation

- General Safety Guidelines and Warnings on page 329
- Installation Instructions Warning on page 337

- Mounting a QFX5100 Device in a Rack or Cabinet on page 435

Chassis Lifting Guidelines for a QFX3600 or QFX3600-I Device

The weight of a fully loaded QFX3600 or QFX3600-I device chassis is approximately 20.5 lb (9.3 kg). Observe the following guidelines for lifting and moving a QFX3600 or QFX3600-I device:

- Before installing a QFX3600 or QFX3600-I device, read the guidelines in "Site Preparation Checklist for a QFX3600 or QFX3600-I Device" on page 212 to verify that the intended site meets the specified power, environmental, and clearance requirements.
- Before lifting or moving the QFX3600 or QFX3600-I device, disconnect all external cables.
- As when lifting any heavy object, lift most of the weight with your legs rather than your back. Keep your knees bent and your back relatively straight and avoid twisting your body as you lift. Balance the load evenly and be sure that your footing is solid.

Related Documentation

- General Safety Guidelines and Warnings on page 329
- Installation Instructions Warning on page 337
- Mounting a QFX3600 or QFX3600-I Device on Four Posts in a Rack or Cabinet on page 458
- Mounting a QFX3600 or QFX3600-I Device on Two Posts in a Rack or Cabinet on page 455

Chassis Lifting Guidelines for a QFX3500 Device

The weight of a fully loaded QFX3500 device chassis is approximately 30.8 lb (14 kg). Observe the following guidelines for lifting and moving a QFX3500 device:

CAUTION: **If you are installing the QFX3500 device above 60 in. (152.4 cm) from the floor, you must remove the power supplies, fan trays, and management board before attempting to install the device, or ask someone to assist you during the installation.**

- Before installing a QFX3500 device, read the guidelines in "Site Preparation Checklist for a QFX3500 Device" on page 213 to verify that the intended site meets the specified power, environmental, and clearance requirements.
- Before lifting or moving the QFX3500 device, disconnect all external cables.
- As when lifting any heavy object, lift most of the weight with your legs rather than your back. Keep your knees bent and your back relatively straight and avoid twisting your body as you lift. Balance the load evenly and be sure that your footing is solid.

Copyright © 2018, Juniper Networks, Inc.

Related Documentation

- General Safety Guidelines and Warnings on page 329
- Installation Instructions Warning on page 337
- Mounting a QFX3500 Device in a Rack or Cabinet on page 475

Chassis Lifting Guidelines for EX4300 Switches

The weight of an EX4300 switch is approximately 13 lb (5.9 kg). Observe the following guidelines for lifting and moving the switch:

- Before moving the switch to a site, ensure that the site meets the power, environmental, and clearance requirements specified in the "Site Preparation Checklist for EX4300 Switches" on page 215.
- Before lifting or moving the switch, disconnect all external cables and wires.
- As when lifting any heavy object, ensure that most of the weight is borne by your legs rather than your back. Keep your knees bent and your back relatively straight. Do not twist your body as you lift. Balance the load evenly and be sure that your footing is firm.

Related Documentation

- General Safety Guidelines and Warnings on page 329
- Installation Instructions Warning on page 337
- *Mounting an EX4300 Switch*

Chassis Lifting Guidelines for EX4200 Switches

The weight of a fully loaded EX4200 switch chassis is approximately 22 lb (10 kg). Observe the following guidelines for lifting and moving an EX4200 switch:

- Before installing an EX4200 switch, read the guidelines in "Site Preparation Checklist for EX4200 Switches" on page 216 to verify that the intended site meets the specified power, environmental, and clearance requirements.
- Before lifting or moving the EX4200 switch, disconnect all external cables.
- As when lifting any heavy object, lift most of the weight with your legs rather than your back. Keep your knees bent and your back relatively straight and avoid twisting your body as you lift. Balance the load evenly and be sure that your footing is solid.

Related Documentation

- General Safety Guidelines and Warnings on page 329
- Installation Instructions Warning on page 337
- *Mounting an EX4200 Switch*

Copyright © 2018, Juniper Networks, Inc.

Restricted Access Warning

WARNING: This unit is intended for installation in restricted access areas. A restricted access area is an area to which access can be gained only by service personnel through the use of a special tool, lock and key, or other means of security, and which is controlled by the authority responsible for the location.

Waarschuwing Dit toestel is bedoeld voor installatie op plaatsen met beperkte toegang. Een plaats met beperkte toegang is een plaats waar toegang slechts door servicepersoneel verkregen kan worden door middel van een speciaal instrument, een slot en sleutel, of een ander veiligheidsmiddel, en welke beheerd wordt door de overheidsinstantie die verantwoordelijk is voor de locatie.

Varoitus Tämä laite on tarkoitettu asennettavaksi paikkaan, johon pääsy on rajoitettua. Paikka, johon pääsy on rajoitettua, tarkoittaa paikkaa, johon vain huoltohenkilöstö pääsee jonkin erikoistyökalun, lukkoon sopivan avaimen tai jonkin muun turvalaitteen avulla ja joka on paikasta vastuussa olevien toimivaltaisten henkilöiden valvoma.

Attention Cet appareil est à installer dans des zones d'accès réservé. Ces dernières sont des zones auxquelles seul le personnel de service peut accéder en utilisant un outil spécial, un mécanisme de verrouillage et une clé, ou tout autre moyen de sécurité. L'accès aux zones de sécurité est sous le contrôle de l'autorité responsable de l'emplacement.

Warnung Diese Einheit ist zur Installation in Bereichen mit beschränktem Zutritt vorgesehen. Ein Bereich mit beschränktem Zutritt ist ein Bereich, zu dem nur Wartungspersonal mit einem Spezialwerkzeugs, Schloß und Schlüssel oder anderer Sicherheitsvorkehrungen Zugang hat, und der von dem für die Anlage zuständigen Gremium kontrolliert wird.

Avvertenza Questa unità deve essere installata in un'area ad accesso limitato. Un'area ad accesso limitato è un'area accessibile solo a personale di assistenza tramite un'attrezzo speciale, lucchetto, o altri dispositivi di sicurezza, ed è controllata dall'autorità responsabile della zona.

Advarsel Denne enheten er laget for installasjon i områder med begrenset adgang. Et område med begrenset adgang gir kun adgang til servicepersonale som bruker et spesielt verktøy, lås og nøkkel, eller en annen sikkerhetsanordning, og det kontrolleres av den autoriteten som er ansvarlig for området.

Aviso Esta unidade foi concebida para instalação em áreas de acesso restrito. Uma área de acesso restrito é uma área à qual apenas tem acesso o pessoal de serviço autorizado, que possua uma ferramenta, chave e fechadura especial, ou qualquer outra forma de segurança. Esta área é controlada pela autoridade responsável pelo local.

Copyright © 2018, Juniper Networks, Inc.

¡Atención! Esta unidad ha sido diseñada para instalarse en áreas de acceso restringido. Área de acceso restringido significa un área a la que solamente tiene acceso el personal de servicio mediante la utilización de una herramienta especial, cerradura con llave, o algún otro medio de seguridad, y que está bajo el control de la autoridad responsable del local.

Varning! Denna enhet är avsedd för installation i områden med begränsat tillträde. Ett område med begränsat tillträde får endast tillträdas av servicepersonal med ett speciellt verktyg, lås och nyckel, eller annan säkerhetsanordning, och kontrolleras av den auktoritet som ansvarar för området.

Ramp Warning

WARNING: When installing the device, do not use a ramp inclined at more than 10 degrees.

Waarschuwing Gebruik een oprijplaat niet onder een hoek van meer dan 10 graden.

Varoitus Älä käytä sellaista kaltevaa pintaa, jonka kaltevuus ylittää 10 astetta.

Attention Ne pas utiliser une rampe dont l'inclinaison est supérieure à 10 degrés.

Warnung Keine Rampen mit einer Neigung von mehr als 10 Grad verwenden.

Avvertenza Non usare una rampa con pendenza superiore a 10 gradi.

Advarsel Bruk aldri en rampe som heller mer enn 10 grader.

Aviso Não utilize uma rampa com uma inclinação superior a 10 graus.

¡Atención! No usar una rampa inclinada más de 10 grados

Varning! Använd inte ramp med en lutning på mer än 10 grader.

Rack-Mounting and Cabinet-Mounting Warnings

Ensure that the rack or cabinet in which the device is installed is evenly and securely supported. Uneven mechanical loading could lead to a hazardous condition.

WARNING: To prevent bodily injury when mounting or servicing the device in a rack, take the following precautions to ensure that the system remains stable. The following directives help maintain your safety:

- The device must be installed in a rack that is secured to the building structure.
- The device should be mounted at the bottom of the rack if it is the only unit in the rack.
- When mounting the device on a partially filled rack, load the rack from the bottom to the top with the heaviest component at the bottom of the rack.
- If the rack is provided with stabilizing equipment, install the stabilizers before mounting or servicing the device in the rack.

Waarschuwing Om lichamelijk letsel te voorkomen wanneer u dit toestel in een rek monteert of het daar een servicebeurt geeft, moet u speciale voorzorgsmaatregelen nemen om ervoor te zorgen dat het toestel stabiel blijft. De onderstaande richtlijnen worden verstrekt om uw veiligheid te verzekeren:

- De Juniper Networks switch moet in een stellage worden geïnstalleerd die aan een bouwsel is verankerd.
- Dit toestel dient onderaan in het rek gemonteerd te worden als het toestel het enige in het rek is.
- Wanneer u dit toestel in een gedeeltelijk gevuld rek monteert, dient u het rek van onderen naar boven te laden met het zwaarste onderdeel onderaan in het rek.
- Als het rek voorzien is van stabiliseringshulpmiddelen, dient u de stabilisatoren te monteren voordat u het toestel in het rek monteert of het daar een servicebeurt geeft.

Varoitus Kun laite asetetaan telineeseen tai huolletaan sen ollessa telineessä, on noudatettava erityisiä varotoimia järjestelmän vakavuuden säilyttämiseksi, jotta vältytään loukkaantumiselta. Noudata seuraavia turvallisuusohjeita:

- Juniper Networks switch on asennettava telineeseen, joka on kiinnitetty rakennukseen.
- Jos telineessä ei ole muita laitteita, aseta laite telineen alaosaan.
- Jos laite asetetaan osaksi täytettyyn telineeseen, aloita kuormittaminen sen alaosasta kaikkein raskaimmalla esineellä ja siirry sitten sen yläosaan.
- Jos telinettä varten on vakaimet, asenna ne ennen laitteen asettamista telineeseen tai sen huoltamista siinä.

Attention Pour éviter toute blessure corporelle pendant les opérations de montage ou de réparation de cette unité en casier, il convient de prendre des précautions spéciales afin de maintenir la stabilité du système. Les directives ci-dessous sont destinées à assurer la protection du personnel:

 Copyright © 2018, Juniper Networks, Inc.

- Le rack sur lequel est monté le Juniper Networks switch doit être fixé à la structure du bâtiment.
- Si cette unité constitue la seule unité montée en casier, elle doit être placée dans le bas.
- Si cette unité est montée dans un casier partiellement rempli, charger le casier de bas en haut en plaçant l'élément le plus lourd dans le bas.
- Si le casier est équipé de dispositifs stabilisateurs, installer les stabilisateurs avant de monter ou de réparer l'unité en casier.

Warnung Zur Vermeidung von Körperverletzung beim Anbringen oder Warten dieser Einheit in einem Gestell müssen Sie besondere Vorkehrungen treffen, um sicherzustellen, daß das System stabil bleibt. Die folgenden Richtlinien sollen zur Gewährleistung Ihrer Sicherheit dienen:

- Der Juniper Networks switch muß in einem Gestell installiert werden, das in der Gebäudestruktur verankert ist.
- Wenn diese Einheit die einzige im Gestell ist, sollte sie unten im Gestell angebracht werden.
- Bei Anbringung dieser Einheit in einem zum Teil gefüllten Gestell ist das Gestell von unten nach oben zu laden, wobei das schwerste Bauteil unten im Gestell anzubringen ist.
- Wird das Gestell mit Stabilisierungszubehör geliefert, sind zuerst die Stabilisatoren zu installieren, bevor Sie die Einheit im Gestell anbringen oder sie warten.

Avvertenza Per evitare infortuni fisici durante il montaggio o la manutenzione di questa unità in un supporto, occorre osservare speciali precauzioni per garantire che il sistema rimanga stabile. Le seguenti direttive vengono fornite per garantire la sicurezza personale:

- Il Juniper Networks switch deve essere installato in un telaio, il quale deve essere fissato alla struttura dell'edificio.
- Questa unità deve venire montata sul fondo del supporto, se si tratta dell'unica unità da montare nel supporto.
- Quando questa unità viene montata in un supporto parzialmente pieno, caricare il supporto dal basso all'alto, con il componente più pesante sistemato sul fondo del supporto.
- Se il supporto è dotato di dispositivi stabilizzanti, installare tali dispositivi prima di montare o di procedere alla manutenzione dell'unità nel supporto.

Advarsel Unngå fysiske skader under montering eller reparasjonsarbeid på denne enheten når den befinner seg i et kabinett. Vær nøye med at systemet er stabilt. Følgende retningslinjer er gitt for å verne om sikkerheten:

- Juniper Networks switch må installeres i et stativ som er forankret til bygningsstrukturen.
- Denne enheten bør monteres nederst i kabinettet hvis dette er den eneste enheten i kabinettet.
- Ved montering av denne enheten i et kabinett som er delvis fylt, skal kabinettet lastes fra bunnen og opp med den tyngste komponenten nederst i kabinettet.
- Hvis kabinettet er utstyrt med stabiliseringsutstyr, skal stabilisatorene installeres før montering eller utføring av reparasjonsarbeid på enheten i kabinettet.

Aviso Para se prevenir contra danos corporais ao montar ou reparar esta unidade numa estante, deverá tomar precauções especiais para se certificar de que o sistema possui um suporte estável. As seguintes directrizes ajudá-lo-ão a efectuar o seu trabalho com segurança:

- O Juniper Networks switch deverá ser instalado numa prateleira fixa à estrutura do edificio.
- Esta unidade deverá ser montada na parte inferior da estante, caso seja esta a única unidade a ser montada.
- Ao montar esta unidade numa estante parcialmente ocupada, coloque os itens mais pesados na parte inferior da estante, arrumando-os de baixo para cima.
- Se a estante possuir um dispositivo de estabilização, instale-o antes de montar ou reparar a unidade.

¡Atención! Para evitar lesiones durante el montaje de este equipo sobre un bastidor, oeriormente durante su mantenimiento, se debe poner mucho cuidado en que el sistema quede bien estable. Para garantizar su seguridad, proceda según las siguientes instrucciones:

- El Juniper Networks switch debe instalarse en un bastidor fijado a la estructura del edificio.
- Colocar el equipo en la parte inferior del bastidor, cuando sea la única unidad en el mismo.
- Cuando este equipo se vaya a instalar en un bastidor parcialmente ocupado, comenzar la instalación desde la parte inferior hacia la superior colocando el equipo más pesado en la parte inferior.
- Si el bastidor dispone de dispositivos estabilizadores, instalar éstos antes de montar o proceder al mantenimiento del equipo instalado en el bastidor.

Varning! För att undvika kroppsskada när du installerar eller utför underhållsarbete på denna enhet på en ställning måste du vidta särskilda

 Copyright © 2018, Juniper Networks, Inc.

försiktighetsåtgärder för att försäkra dig om att systemet står stadigt. Följande riktlinjer ges för att trygga din säkerhet:

- Juniper Networks switch måste installeras i en ställning som är förankrad i byggnadens struktur.
- Om denna enhet är den enda enheten på ställningen skall den installeras längst ned på ställningen.
- Om denna enhet installeras på en delvis fylld ställning skall ställningen fyllas nedifrån och upp, med de tyngsta enheterna längst ned på ställningen.
- Om ställningen är försedd med stabiliseringsdon skall dessa monteras fast innan enheten installeras eller underhålls på ställningen.

Grounded Equipment Warning

WARNING: The device is intended to be grounded. During normal use, ensure that you have connected earth ground to the chassis.

Waarschuwing Deze apparatuur hoort geaard te worden Zorg dat de host-computer tijdens normaal gebruik met aarde is verbonden.

Varoitus Tämä laitteisto on tarkoitettu maadoitettavaksi. Varmista, että isäntälaite on yhdistetty maahan normaalikäytön aikana.

Attention Cet équipement doit être relié à la terre. S'assurer que l'appareil hôte est relié à la terre lors de l'utilisation normale.

Warnung Dieses Gerät muß geerdet werden. Stellen Sie sicher, daß das Host-Gerät während des normalen Betriebs an Erde gelegt ist.

Avvertenza Questa apparecchiatura deve essere collegata a massa. Accertarsi che il dispositivo host sia collegato alla massa di terra durante il normale utilizzo.

Advarsel Dette utstyret skal jordes. Forviss deg om vertsterminalen er jordet ved normalt bruk.

Aviso Este equipamento deverá estar ligado à terra. Certifique-se que o host se encontra ligado à terra durante a sua utilização normal.

¡Atención! Este equipo debe conectarse a tierra. Asegurarse de que el equipo principal esté conectado a tierra durante el uso normal.

Varning! Denna utrustning är avsedd att jordas. Se till att värdenheten är jordad vid normal användning.

Copyright © 2018, Juniper Networks, Inc.

CHAPTER 24

Radiation and Laser Warnings

- Radiation from Open Port Apertures Warning on page 349
- Laser and LED Safety Guidelines and Warnings for the QFX Series on page 350

Radiation from Open Port Apertures Warning

WARNING: Because invisible radiation might be emitted from the aperture of the port when no fiber cable is connected, avoid exposure to radiation and do not stare into open apertures.

Waarschuwing Aangezien onzichtbare straling vanuit de opening van de poort kan komen als er geen fiberkabel aangesloten is, dient blootstelling aan straling en het kijken in open openingen vermeden te worden.

Varoitus Koska portin aukosta voi emittoitua näkymätöntä säteilyä, kun kuitukaapelia ei ole kytkettynä, vältä säteilylle altistumista äläkä katso avoimiin aukkoihin.

Attention Des radiations invisibles à l'il nu pouvant traverser l'ouverture du port lorsqu'aucun câble en fibre optique n'y est connecté, il est recommandé de ne pas regarder fixement l'intérieur de ces ouvertures.

Warnung Aus der Port-Öffnung können unsichtbare Strahlen emittieren, wenn kein Glasfaserkabel angeschlossen ist. Vermeiden Sie es, sich den Strahlungen auszusetzen, und starren Sie nicht in die Öffnungen!

Avvertenza Quando i cavi in fibra non sono inseriti, radiazioni invisibili possono essere emesse attraverso l'apertura della porta. Evitate di esporvi alle radiazioni e non guardate direttamente nelle aperture.

Advarsel Unngå utsettelse for stråling, og stirr ikke inn i åpninger som er åpne, fordi usynlig stråling kan emiteres fra portens åpning når det ikke er tilkoblet en fiberkabel.

Aviso Dada a possibilidade de emissão de radiação invisível através do orifício da via de acesso, quando esta não tiver nenhum cabo de fibra conectado, deverá evitar a exposição à radiação e não deverá olhar fixamente para orifícios que se encontrarem a descoberto.

Copyright © 2018, Juniper Networks, Inc.

¡Atención! Debido a que la apertura del puerto puede emitir radiación invisible cuando no existe un cable de fibra conectado, evite mirar directamente a las aperturas para no exponerse a la radiación.

Varning! Osynlig strålning kan avges från en portöppning utan ansluten fiberkabel och du bör därför undvika att bli utsatt för strålning genom att inte stirra in i oskyddade öppningar.

Laser and LED Safety Guidelines and Warnings for the QFX Series

In addition to the general guidelines provided in *Laser and LED Safety Guidelines and Warnings*, follow these warnings and guidelines that are specific to QFX Series devices.

QFX Series devices are equipped with laser transmitters:

- SFP and SFP+ transceivers are classified as Class 1 Laser Products (complies with 21 CFR 1040.10 and 1040.11 except for deviations pursuant to Laser Notice 50, dated July 26, 2001) or Class 1 LED Products.
- QSFP+ and QSFP28 transceivers are classified as Class 1M Laser Products (IEC 60825-1 2001–01).

Observe the following guidelines and warnings:

- Class 1M Laser Product Warning on page 350
- Class 1M Laser Radiation Warning on page 351
- Unterminated Fiber-Optic Cable Warning on page 351

Class 1M Laser Product Warning

WARNING: **Class 1M laser product.**

Waarschuwing Laserproducten van Klasse 1M (IEC).

Varoitus Luokan 1M (IEC) lasertuotteita.

Attention Produits laser catégorie 1M (IEC).

Warnung Laserprodukte der Klasse 1M (IEC).

Avvertenza Prodotti laser di Classe 1M (IEC).

Advarsel Klasse 1M (IEC) laserprodukter.

Aviso Produtos laser Classe 1M (IEC).

¡Atención! Productos láser de Clase 1M (IEC).

Varning! Laserprodukter av Klass 1M (IEC).

Copyright © 2018, Juniper Networks, Inc.

Class 1M Laser Radiation Warning

WARNING: Class 1M laser radiation when open. Do not view directly with optical instruments.

Unterminated Fiber-Optic Cable Warning

WARNING: Invisible laser radiation might be emitted from the unterminated connector of a fiber-optic cable. To avoid injury to your eye, do not view the fiber optics with a magnifying optical device, such as a loupe, within 100 mm.

Waarschuwing Er kunnen onzichtbare laserstralen worden uitgezonden vanuit het uiteinde van de onafgebroken vezelkabel of connector. Niet in de straal kijken of deze rechtstreeks bekijken met optische instrumenten. Als u de laseruitvoer met bepaalde optische instrumenten bekijkt (zoals bijv. een oogloep, vergrootgras of microscoop) binnen een afstand van 100 mm kan dit gevaar voor uw ogen opleveren.

Varoitus Päättämättömän kuitukaapelin tai -liittimen päästä voi tulla näkymätöntä lasersäteilyä. Älä tuijota sädettä tai katso sitä suoraan optisilla välineillä. Lasersäteen katsominen tietyillä optisilla välineillä (esim. suurennuslasilla tai mikroskoopilla) 10 cm:n päästä tai sitä lähempää voi olla vaarallista silmille.

Attention Des émissions de radiations laser invisibles peuvent se produire à l'extrémité d'un câble en fibre ou d'un raccord sans terminaison. Ne pas fixer du regard le rayon ou l'observer directement avec des instruments optiques. L'observation du laser à l'aide certains instruments optiques (loupes et microscopes) à une distance inférieure à 100 mm peut poser des risques pour les yeux.

Warnung Eine unsichtbare Laserstrahlung kann vom Ende des nicht angeschlossenen Glasfaserkabels oder Steckers ausgestrahlt werden. Nicht in den Laserstrahl schauen oder diesen mit einem optischen Instrument direkt ansehen. Ein Betrachten des Laserstrahls mit bestimmten optischen Instrumenten, wie z.B. Augenlupen, Vergrößerungsgläsern und Mikroskopen innerhalb eines Abstands von 100 mm kann für das Auge gefährlich sein.

Avvertenza L'estremità del connettore o del cavo ottico senza terminazione può emettere radiazioni laser invisibili. Non fissare il raggio od osservarlo in modo diretto con strumenti ottici. L'osservazione del fascio laser con determinati strumenti ottici (come lupette, lenti di ingrandimento o microscopi) entro una distanza di 100 mm può provocare danni agli occhi.

Advarsel Usynlig laserstråling kan emittere fra enden av den ikke-terminerte fiberkabelen eller koblingen. Ikke se inn i strålen og se heller ikke direkte på strålen med optiske instrumenter. Observering av laserutgang med visse

optiske instrumenter (for eksempel øyelupe, forstørrelsesglass eller mikroskoper) innenfor en avstand på 100 mm kan være farlig for øynene.

Aviso Radiação laser invisível pode ser emitida pela ponta de um conector ou cabo de fibra não terminado. Não olhe fixa ou diretamente para o feixe ou com instrumentos ópticos. Visualizar a emissão do laser com certos instrumentos ópticos (por exemplo, lupas, lentes de aumento ou microscópios) a uma distância de 100 mm pode causar riscos à visão.

¡Atención! El extremo de un cable o conector de fibra sin terminación puede emitir radiación láser invisible. No se acerque al radio de acción ni lo mire directamente con instrumentos ópticos. La exposición del ojo a una salida de láser con determinados instrumentos ópticos (por ejemplo, lupas y microscopios) a una distancia de 100 mm puede comportar lesiones oculares.

Varning! Osynlig laserstrålning kan komma från änden på en oavslutad fiberkabel eller -anslutning. Titta inte rakt in i strålen eller direkt på den med optiska instrument. Att titta på laserstrålen med vissa optiska instrument (t.ex. lupper, förstoringsglas och mikroskop) från ett avstånd på 100 mm kan skada ögonen.

Related Documentation

- General Safety Guidelines and Warnings on page 329
- Radiation from Open Port Apertures Warning on page 349
- Installation Instructions Warning on page 337
- Grounded Equipment Warning on page 347

Copyright © 2018, Juniper Networks, Inc.

CHAPTER 25

Maintenance and Operational Safety Warnings

- Maintenance and Operational Safety Guidelines and Warnings on page 353

Maintenance and Operational Safety Guidelines and Warnings

While performing the maintenance activities for devices, observe the following guidelines and warnings:

- Battery Handling Warning on page 353
- Jewelry Removal Warning on page 354
- Lightning Activity Warning on page 355
- Operating Temperature Warning on page 356
- Product Disposal Warning on page 357

Battery Handling Warning

WARNING: Replacing a battery incorrectly might result in an explosion. Replace a battery only with the same or equivalent type recommended by the manufacturer. Dispose of used batteries according to the manufacturer's instructions.

Waarschuwing Er is ontploffingsgevaar als de batterij verkeerd vervangen wordt. Vervang de batterij slechts met hetzelfde of een equivalent type dat door de fabrikant aanbevolen is. Gebruikte batterijen dienen overeenkomstig fabrieksvoorschriften weggeworpen te worden.

Varoitus Räjähdyksen vaara, jos akku on vaihdettu väärään akkuun. Käytä vaihtamiseen ainoastaan saman- tai vastaavantyyppistä akkua, joka on valmistajan suosittelema. Hävitä käytetyt akut valmistajan ohjeiden mukaan.

Attention Danger d'explosion si la pile n'est pas remplacée correctement. Ne la remplacer que par une pile de type semblable ou équivalent, recommandée par le fabricant. Jeter les piles usagées conformément aux instructions du fabricant.

Copyright © 2018, Juniper Networks, Inc.

Warnung Bei Einsetzen einer falschen Batterie besteht Explosionsgefahr. Ersetzen Sie die Batterie nur durch den gleichen oder vom Hersteller empfohlenen Batterietyp. Entsorgen Sie die benutzten Batterien nach den Anweisungen des Herstellers.

Advarsel Det kan være fare for eksplosjon hvis batteriet skiftes på feil måte. Skift kun med samme eller tilsvarende type som er anbefalt av produsenten. Kasser brukte batterier i henhold til produsentens instruksjoner.

Avvertenza Pericolo di esplosione se la batteria non è installata correttamente. Sostituire solo con una di tipo uguale o equivalente, consigliata dal produttore. Eliminare le batterie usate secondo le istruzioni del produttore.

Aviso Existe perigo de explosão se a bateria for substituída incorrectamente. Substitua a bateria por uma bateria igual ou de um tipo equivalente recomendado pelo fabricante. Destrua as baterias usadas conforme as instruções do fabricante.

¡Atención! Existe peligro de explosión si la batería se reemplaza de manera incorrecta. Reemplazar la batería exclusivamente con el mismo tipo o el equivalente recomendado por el fabricante. Desechar las baterías gastadas según las instrucciones del fabricante.

Varning! Explosionsfara vid felaktigt batteribyte. Ersätt endast batteriet med samma batterityp som rekommenderas av tillverkaren eller motsvarande. Följ tillverkarens anvisningar vid kassering av använda batterier.

Jewelry Removal Warning

WARNING: Before working on equipment that is connected to power lines, remove jewelry, including rings, necklaces, and watches. Metal objects heat up when connected to power and ground and can cause serious burns or can be welded to the terminals.

Waarschuwing Alvorens aan apparatuur te werken die met elektrische leidingen is verbonden, sieraden (inclusief ringen, kettingen en horloges) verwijderen. Metalen voorwerpen worden warm wanneer ze met stroom en aarde zijn verbonden, en kunnen ernstige brandwonden veroorzaken of het metalen voorwerp aan de aansluitklemmen lassen.

Varoitus Ennen kuin työskentelet voimavirtajohtoihin kytkettyjen laitteiden parissa, ota pois kaikki korut (sormukset, kaulakorut ja kellot mukaan lukien). Metalliesineet kuumenevat, kun ne ovat yhteydessä sähkövirran ja maan kanssa, ja ne voivat aiheuttaa vakavia palovammoja tai hitsata metalliesineet kiinni liitäntänapoihin.

Attention Avant d'accéder à cet équipement connecté aux lignes électriques, ôter tout bijou (anneaux, colliers et montres compris). Lorsqu'ils sont branchés

Copyright © 2018, Juniper Networks, Inc.

à l'alimentation et reliés à la terre, les objets métalliques chauffent, ce qui peut provoquer des blessures graves ou souder l'objet métallique aux bornes.

Warnung Vor der Arbeit an Geräten, die an das Netz angeschlossen sind, jeglichen Schmuck (einschließlich Ringe, Ketten und Uhren) abnehmen. Metallgegenstände erhitzen sich, wenn sie an das Netz und die Erde angeschlossen werden, und können schwere Verbrennungen verursachen oder an die Anschlußklemmen angeschweißt werden.

Avvertenza Prima di intervenire su apparecchiature collegate alle linee di alimentazione, togliersi qualsiasi monile (inclusi anelli, collane, braccialetti ed orologi). Gli oggetti metallici si riscaldano quando sono collegati tra punti di alimentazione e massa: possono causare ustioni gravi oppure il metallo può saldarsi ai terminali.

Advarsel Fjern alle smykker (inkludert ringer, halskjeder og klokker) før du skal arbeide på utstyr som er koblet til kraftledninger. Metallgjenstander som er koblet til kraftledninger og jord blir svært varme og kan forårsake alvorlige brannskader eller smelte fast til polene.

Aviso Antes de trabalhar em equipamento que esteja ligado a linhas de corrente, retire todas as jóias que estiver a usar (incluindo anéis, fios e relógios). Os objectos metálicos aquecerão em contacto com a corrente e em contacto com a ligação à terra, podendo causar queimaduras graves ou ficarem soldados aos terminais.

¡Atención! Antes de operar sobre equipos conectados a líneas de alimentación, quitarse las joyas (incluidos anillos, collares y relojes). Los objetos de metal se calientan cuando se conectan a la alimentación y a tierra, lo que puede ocasionar quemaduras graves o que los objetos metálicos queden soldados a los bornes.

Varning! Tag av alla smycken (inklusive ringar, halsband och armbandsur) innan du arbetar på utrustning som är kopplad till kraftledningar. Metallobjekt hettas upp när de kopplas ihop med ström och jord och kan förorsaka allvarliga brännskador; metallobjekt kan också sammansvetsas med kontakterna.

Lightning Activity Warning

WARNING: Do not work on the system or connect or disconnect cables during periods of lightning activity.

Waarschuwing Tijdens onweer dat gepaard gaat met bliksem, dient u niet aan het systeem te werken of kabels aan te sluiten of te ontkoppelen.

Varoitus Älä työskentele järjestelmän parissa äläkä yhdistä tai irrota kaapeleita ukkosilmalla.

Attention Ne pas travailler sur le système ni brancher ou débrancher les câbles pendant un orage.

Warnung Arbeiten Sie nicht am System und schließen Sie keine Kabel an bzw. trennen Sie keine ab, wenn es gewittert.

Avvertenza Non lavorare sul sistema o collegare oppure scollegare i cavi durante un temporale con fulmini.

Advarsel Utfør aldri arbeid på systemet, eller koble kabler til eller fra systemet når det tordner eller lyner.

Aviso Não trabalhe no sistema ou ligue e desligue cabos durante períodos de mau tempo (trovoada).

¡Atención! No operar el sistema ni conectar o desconectar cables durante el transcurso de descargas eléctricas en la atmósfera.

Varning! Vid åska skall du aldrig utföra arbete på systemet eller ansluta eller koppla loss kablar.

Operating Temperature Warning

WARNING: To prevent the device from overheating, do not operate it in an area that exceeds the maximum recommended ambient temperature. To prevent airflow restriction, allow at least 6 in. (15.2 cm) of clearance around the ventilation openings.

Waarschuwing Om te voorkomen dat welke switch van de Juniper Networks router dan ook oververhit raakt, dient u deze niet te bedienen op een plaats waar de maximale aanbevolen omgevingstemperatuur van 40° C wordt overschreden. Om te voorkomen dat de luchtstroom wordt beperkt, dient er minstens 15,2 cm speling rond de ventilatie-openingen te zijn.

Varoitus Ettei Juniper Networks switch-sarjan reititin ylikuumentuisi, sitä ei saa käyttää tilassa, jonka lämpötila ylittää korkeimman suositellun ympäristölämpötilan 40° C. Ettei ilmanvaihto estyisi, tuuletusaukkojen ympärille on jätettävä ainakin 15,2 cm tilaa.

Attention Pour éviter toute surchauffe des routeurs de la gamme Juniper Networks switch, ne l'utilisez pas dans une zone où la température ambiante est supérieure à 40° C. Pour permettre un flot d'air constant, dégagez un espace d'au moins 15,2 cm autour des ouvertures de ventilations.

Warnung Um einen Router der switch vor Überhitzung zu schützen, darf dieser nicht in einer Gegend betrieben werden, in der die Umgebungstemperatur das empfohlene Maximum von 40° C überschreitet. Um Lüftungsverschluß zu verhindern, achten Sie darauf, daß mindestens 15,2 cm lichter Raum um die Lüftungsöffnungen herum frei bleibt.

Copyright © 2018, Juniper Networks, Inc.

Avvertenza Per evitare il surriscaldamento dei switch, non adoperateli in un locale che ecceda la temperatura ambientale massima di 40° C. Per evitare che la circolazione dell'aria sia impedita, lasciate uno spazio di almeno 15.2 cm di fronte alle aperture delle ventole.

Advarsel Unngå overoppheting av eventuelle rutere i Juniper Networks switch Disse skal ikke brukes på steder der den anbefalte maksimale omgivelsestemperaturen overstiger 40° C (104° F). Sørg for at klaringen rundt lufteåpningene er minst 15,2 cm (6 tommer) for å forhindre nedsatt luftsirkulasjon.

Aviso Para evitar o sobreaquecimento do encaminhador Juniper Networks switch, não utilize este equipamento numa área que exceda a temperatura máxima recomendada de 40° C. Para evitar a restrição à circulação de ar, deixe pelo menos um espaço de 15,2 cm à volta das aberturas de ventilação.

¡Atención! Para impedir que un encaminador de la serie Juniper Networks switch se recaliente, no lo haga funcionar en un área en la que se supere la temperatura ambiente máxima recomendada de 40° C. Para impedir la restricción de la entrada de aire, deje un espacio mínimo de 15,2 cm alrededor de las aperturas para ventilación.

Varning! Förhindra att en Juniper Networks switch överhettas genom att inte använda den i ett område där den maximalt rekommenderade omgivningstemperaturen på 40° C överskrids. Förhindra att luftcirkulationen inskränks genom att se till att det finns fritt utrymme på minst 15,2 cm omkring ventilationsöppningarna.

Product Disposal Warning

WARNING: Disposal of this device must be handled according to all national laws and regulations.

Waarschuwing Dit produkt dient volgens alle landelijke wetten en voorschriften te worden afgedankt.

Varoitus Tämän tuotteen lopullisesta hävittämisestä tulee huolehtia kaikkia valtakunnallisia lakeja ja säännöksiä noudattaen.

Attention La mise au rebut définitive de ce produit doit être effectuée conformément à toutes les lois et réglementations en vigueur.

Warnung Dieses Produkt muß den geltenden Gesetzen und Vorschriften entsprechend entsorgt werden.

Avvertenza L'eliminazione finale di questo prodotto deve essere eseguita osservando le normative italiane vigenti in materia

Advarsel Endelig disponering av dette produktet må skje i henhold til nasjonale lover og forskrifter.

Aviso A descartagem final deste produto deverá ser efectuada de acordo com os regulamentos e a legislação nacional.

¡Atención! El desecho final de este producto debe realizarse según todas las leyes y regulaciones nacionales

Varning! Slutlig kassering av denna produkt bör skötas i enlighet med landets alla lagar och föreskrifter.

Copyright © 2018, Juniper Networks, Inc.

CHAPTER 26

Power and Electrical Safety Information

- General Electrical Safety Guidelines and Warnings on page 359
- Prevention of Electrostatic Discharge Damage on page 360
- Action to Take After an Electrical Accident on page 362
- AC Power Electrical Safety Guidelines on page 362
- AC Power Disconnection Warning on page 363
- DC Power Electrical Safety Guidelines on page 364
- DC Power Disconnection Warning on page 364
- DC Power Grounding Requirements and Warning on page 366
- DC Power Wiring Sequence Warning on page 367
- DC Power Wiring Terminations Warning on page 368
- Multiple Power Supplies Disconnection Warning on page 369
- TN Power Warning on page 370

General Electrical Safety Guidelines and Warnings

WARNING: Certain ports on the device are designed for use as intrabuilding (within-the-building) interfaces only (Type 2 or Type 4 ports as described in *GR-1089-CORE*) and require isolation from the exposed outside plant (OSP) cabling. To comply with NEBS requirements and protect against lightning surges and commercial power disturbances, the intrabuilding ports *must not* be metallically connected to interfaces that connect to the OSP or its wiring. The intrabuilding ports on the device are suitable for connection to intrabuilding or unexposed wiring or cabling only. The addition of primary protectors is not sufficient protection for connecting these interfaces metallically to OSP wiring.

CAUTION: Before removing or installing components of a device, connect an electrostatic discharge (ESD) grounding strap to an ESD point and wrap and fasten the other end of the strap around your bare wrist. Failure to use an ESD grounding strap could result in damage to the device.

Copyright © 2018, Juniper Networks, Inc.

- Install the device in compliance with the following local, national, and international electrical codes:
  - United States—National Fire Protection Association (NFPA 70), United States National Electrical Code.
  - Other countries—International Electromechanical Commission (IEC) 60364, Part 1 through Part 7.
  - Evaluated to the TN power system.
  - Canada—Canadian Electrical Code, Part 1, CSA C22.1.
- Locate the emergency power-off switch for the room in which you are working so that if an electrical accident occurs, you can quickly turn off the power.
- Make sure that grounding surfaces are cleaned and brought to a bright finish before grounding connections are made.
- Do not work alone if potentially hazardous conditions exist anywhere in your workspace.
- Never assume that power is disconnected from a circuit. Always check the circuit before starting to work.
- Carefully look for possible hazards in your work area, such as moist floors, ungrounded power extension cords, and missing safety grounds.
- Operate the device within marked electrical ratings and product usage instructions.
- To ensure that the device and peripheral equipment function safely and correctly, use the cables and connectors specified for the attached peripheral equipment, and make certain they are in good condition.

You can remove and replace many device components without powering off or disconnecting power to the device, as detailed elsewhere in the hardware documentation for this device. Never install equipment that appears to be damaged.

Prevention of Electrostatic Discharge Damage

Device components that are shipped in antistatic bags are sensitive to damage from static electricity. Some components can be impaired by voltages as low as 30 V. You can easily generate potentially damaging static voltages whenever you handle plastic or foam packing material or if you move components across plastic or carpets. Observe the following guidelines to minimize the potential for electrostatic discharge (ESD) damage, which can cause intermittent or complete component failures:

Copyright © 2018, Juniper Networks, Inc.

- Always use an ESD wrist strap when you are handling components that are subject to ESD damage, and make sure that it is in direct contact with your skin.

  If a grounding strap is not available, hold the component in its antistatic bag (see Figure 146 on page 361) in one hand and touch the exposed, bare metal of the device with the other hand immediately before inserting the component into the device.

  WARNING: **For safety, periodically check the resistance value of the ESD grounding strap. The measurement must be in the range 1 through 10 Mohms.**

- When handling any component that is subject to ESD damage and that is removed from the device, make sure the equipment end of your ESD wrist strap is attached to the ESD point on the chassis.

  If no grounding strap is available, touch the exposed, bare metal of the device to ground yourself before handling the component.

- Avoid contact between the component that is subject to ESD damage and your clothing. ESD voltages emitted from clothing can damage components.

- When removing or installing a component that is subject to ESD damage, always place it component-side up on an antistatic surface, in an antistatic card rack, or in an antistatic bag (see Figure 146 on page 361). If you are returning a component, place it in an antistatic bag before packing it.

Figure 146: Placing a Component into an Antistatic Bag

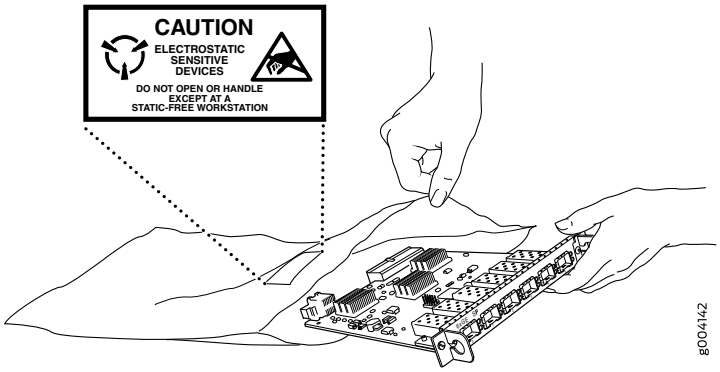

CAUTION: **ANSI/TIA/EIA-568 cables such as Category 5e and Category 6 can get electrostatically charged. To dissipate this charge, always ground the cables to a suitable and safe earth ground before connecting them to the system.**

Action to Take After an Electrical Accident

If an electrical accident results in an injury, take the following actions in this order:

1. Use caution. Be aware of potentially hazardous conditions that could cause further injury.

2. Disconnect power from the device.

3. If possible, send another person to get medical aid. Otherwise, assess the condition of the victim, then call for help.

AC Power Electrical Safety Guidelines

CAUTION: **For devices with AC power supplies, an external surge protective device (SPD) must be used at the AC power source.**

The following electrical safety guidelines apply to AC-powered devices:

- Note the following warnings printed on the device:

  "**CAUTION:** THIS UNIT HAS MORE THAN ONE POWER SUPPLY CORD. DISCONNECT ALL POWER SUPPLY CORDS BEFORE SERVICING TO AVOID ELECTRIC SHOCK."

  "**ATTENTION:** CET APPAREIL COMPORTE PLUS D'UN CORDON D'ALIMENTATION. AFIN DE PRÉVENIR LES CHOCS ÉLECTRIQUES, DÉBRANCHER TOUT CORDON D'ALIMENTATION AVANT DE FAIRE LE DÉPANNAGE."

- AC-powered devices are shipped with a three-wire electrical cord with a grounding-type plug that fits only a grounding-type power outlet. Do not circumvent this safety feature. Equipment grounding must comply with local and national electrical codes.

- You must provide an external certified circuit breaker (2-pole circuit breaker or 4-pole circuit breaker based on your device) rated minimum 20 A in the building installation.

- The power cord serves as the main disconnecting device for the AC-powered device. The socket outlet must be near the AC-powered device and be easily accessible.

- For devices that have more than one power supply connection, you must ensure that all power connections are fully disconnected so that power to the device is completely

Copyright © 2018, Juniper Networks, Inc.

removed to prevent electric shock. To disconnect power, unplug all power cords (one for each power supply).

Power Cable Warning (Japanese)

WARNING: The attached power cable is only for this product. Do not use the cable for another product.

注意

附属の電源コードセットはこの製品専用です。
他の電気機器には使用しないでください。

g017253

AC Power Disconnection Warning

WARNING: Before working on the device or near power supplies, unplug all the power cords from an AC-powered device.

Waarschuwing Voordat u aan een frame of in de nabijheid van voedingen werkt, dient u bij wisselstroom toestellen de stekker van het netsnoer uit het stopcontact te halen.

Varoitus Kytke irti vaihtovirtalaitteiden virtajohto, ennen kuin teet mitään asennuspohjalle tai työskentelet virtalähteiden läheisyydessä.

Attention Avant de travailler sur un châssis ou à proximité d'une alimentation électrique, débrancher le cordon d'alimentation des unités en courant alternatif.

Warnung Bevor Sie an einem Chassis oder in der Nähe von Netzgeräten arbeiten, ziehen Sie bei Wechselstromeinheiten das Netzkabel ab bzw.

Avvertenza Prima di lavorare su un telaio o intorno ad alimentatori, scollegare il cavo di alimentazione sulle unità CA.

Advarsel Før det utføres arbeid på kabinettet eller det arbeides i nærheten av strømforsyningsenheter, skal strømledningen trekkes ut på vekselstrømsenheter.

Aviso Antes de trabalhar num chassis, ou antes de trabalhar perto de unidades de fornecimento de energia, desligue o cabo de alimentação nas unidades de corrente alternada.

¡Atención! Antes de manipular el chasis de un equipo o trabajar cerca de una fuente de alimentación, desenchufar el cable de alimentación en los equipos de corriente alterna (CA).

Varning! Innan du arbetar med ett chassi eller nära strömförsörjningsenheter skall du för växelströmsenheter dra ur nätsladden.

DC Power Electrical Safety Guidelines

- A DC-powered device is equipped with a DC terminal block that is rated for the power requirements of a maximally configured device.

  Incorporate an easily accessible disconnect device into the facility wiring. Be sure to connect the ground wire or conduit to a solid office earth ground. A closed loop ring is recommended for terminating the ground conductor at the ground stud.
- Run two wires from the circuit breaker box to a source of 48 VDC.
- A DC-powered device that is equipped with a DC terminal block is intended only for installation in a restricted-access location. In the United States, a restricted-access area is one in accordance with Articles 110-16, 110-17, and 110-18 of the National Electrical Code ANSI/NFPA 70.

  NOTE: **Primary overcurrent protection is provided by the building circuit breaker. This breaker must protect against excess currents, short circuits, and earth grounding faults in accordance with NEC ANSI/NFPA 70.**
- Ensure that the polarity of the DC input wiring is correct. Under certain conditions, connections with reversed polarity might trip the primary circuit breaker or damage the equipment.
- For personal safety, connect the green and yellow wire to safety (earth) ground at both the device and the supply side of the DC wiring.
- The marked input voltage of –48 VDC for a DC-powered device is the nominal voltage associated with the battery circuit, and any higher voltages are only to be associated with float voltages for the charging function.
- Because the device is a positive ground system, you must connect the positive lead to the terminal labeled **RTN**, the negative lead to the terminal labeled –48 VDC, and the earth ground to the device grounding points.

DC Power Disconnection Warning

WARNING: **Before performing any of the DC power procedures, ensure that power is removed from the DC circuit. To ensure that all power is off, locate the circuit breaker on the panel board that services the DC circuit, switch the circuit breaker to the OFF position, and tape the device handle of the circuit breaker in the OFF position.**

Copyright © 2018, Juniper Networks, Inc.

Waarschuwing Voordat u een van de onderstaande procedures uitvoert, dient u te controleren of de stroom naar het gelijkstroom circuit uitgeschakeld is. Om u ervan te verzekeren dat alle stroom UIT is geschakeld, kiest u op het schakelbord de stroomverbreker die het gelijkstroom circuit bedient, draait de stroomverbreker naar de UIT positie en plakt de schakelaarhendel van de stroomverbreker met plakband in de UIT positie vast.

Varoitus Varmista, että tasavirtapiirissä ei ole virtaa ennen seuraavien toimenpiteiden suorittamista. Varmistaaksesi, että virta on KATKAISTU täysin, paikanna tasavirrasta huolehtivassa kojetaulussa sijaitseva suojakytkin, käännä suojakytkin KATKAISTU-asentoon ja teippaa suojakytkimen varsi niin, että se pysyy KATKAISTU-asennossa.

Attention Avant de pratiquer l'une quelconque des procédures ci-dessous, vérifier que le circuit en courant continu n'est plus sous tension. Pour en être sûr, localiser le disjoncteur situé sur le panneau de service du circuit en courant continu, placer le disjoncteur en position fermée (OFF) et, à l'aide d'un ruban adhésif, bloquer la poignée du disjoncteur en position OFF.

Warnung Vor Ausführung der folgenden Vorgänge ist sicherzustellen, daß die Gleichstromschaltung keinen Strom erhält. Um sicherzustellen, daß sämtlicher Strom abgestellt ist, machen Sie auf der Schalttafel den Unterbrecher für die Gleichstromschaltung ausfindig, stellen Sie den Unterbrecher auf AUS, und kleben Sie den Schaltergriff des Unterbrechers mit Klebeband in der AUS-Stellung fest.

Avvertenza Prima di svolgere una qualsiasi delle procedure seguenti, verificare che il circuito CC non sia alimentato. Per verificare che tutta l'alimentazione sia scollegata (OFF), individuare l'interruttore automatico sul quadro strumenti che alimenta il circuito CC, mettere l'interruttore in posizione OFF e fissarlo con nastro adesivo in tale posizione.

Advarsel Før noen av disse prosedyrene utføres, kontroller at strømmen er frakoblet likestrømkretsen. Sørg for at all strøm er slått AV. Dette gjøres ved å lokalisere strømbryteren på brytertavlen som betjener likestrømkretsen, slå strømbryteren AV og teipe bryterhåndtaket på strømbryteren i AV-stilling.

Aviso Antes de executar um dos seguintes procedimentos, certifique-se que desligou a fonte de alimentação de energia do circuito de corrente contínua. Para se assegurar que toda a corrente foi DESLIGADA, localize o disjuntor no painel que serve o circuito de corrente contínua e coloque-o na posição OFF (Desligado), segurando nessa posição a manivela do interruptor do disjuntor com fita isoladora.

¡Atención! Antes de proceder con los siguientes pasos, comprobar que la alimentación del circuito de corriente continua (CC) esté cortada (OFF). Para asegurarse de que toda la alimentación esté cortada (OFF), localizar el interruptor automático en el panel que alimenta al circuito de corriente continua, cambiar el interruptor automático a la posición de Apagado (OFF),

y sujetar con cinta la palanca del interruptor automático en posición de Apagado (OFF).

Varning! Innan du utför någon av följande procedurer måste du kontrollera att strömförsörjningen till likströmskretsen är bruten. Kontrollera att all strömförsörjning är BRUTEN genom att slå AV det överspänningsskydd som skyddar likströmskretsen och tejpa fast överspänningsskyddets omkopplare i FRÅN-läget.

DC Power Grounding Requirements and Warning

An insulated grounding conductor that is identical in size to the grounded and ungrounded branch circuit supply conductors but is identifiable by green and yellow stripes is installed as part of the branch circuit that supplies the device. The grounding conductor is a separately derived system at the supply transformer or motor generator set.

WARNING: When you install the device, the ground connection must always be made first and disconnected last.

Waarschuwing Bij de installatie van het toestel moet de aardverbinding altijd het eerste worden gemaakt en het laatste worden losgemaakt.

Varoitus Laitetta asennettaessa on maahan yhdistäminen aina tehtävä ensiksi ja maadoituksen irti kytkeminen viimeiseksi.

Attention Lors de l'installation de l'appareil, la mise à la terre doit toujours être connectée en premier et déconnectée en dernier.

Warnung Der Erdanschluß muß bei der Installation der Einheit immer zuerst hergestellt und zuletzt abgetrennt werden.

Avvertenza In fase di installazione dell'unità, eseguire sempre per primo il collegamento a massa e disconnetterlo per ultimo.

Advarsel Når enheten installeres, må jordledningen alltid tilkobles først og frakobles sist.

Aviso Ao instalar a unidade, a ligação à terra deverá ser sempre a primeira a ser ligada, e a última a ser desligada.

¡Atención! Al instalar el equipo, conectar la tierra la primera y desconectarla la última.

Varning! Vid installation av enheten måste jordledningen alltid anslutas först och kopplas bort sist.

Copyright © 2018, Juniper Networks, Inc.

DC Power Wiring Sequence Warning

WARNING: Wire the DC power supply using the appropriate lugs. When connecting power, the proper wiring sequence is ground to ground, +RTN to +RTN, then –48 V to –48 V. When disconnecting power, the proper wiring sequence is –48 V to –48 V, +RTN to +RTN, then ground to ground. Note that the ground wire must always be connected first and disconnected last.

Waarschuwing De juiste bedradingsvolgorde verbonden is aarde naar aarde, +RTN naar +RTN, en –48 V naar – 48 V. De juiste bedradingsvolgorde losgemaakt is en –48 naar –48 V, +RTN naar +RTN, aarde naar aarde.

Varoitus Oikea yhdistettava kytkentajarjestys on maajohto maajohtoon, +RTN varten +RTN, –48 V varten – 48 V. Oikea irrotettava kytkentajarjestys on –48 V varten – 48 V, +RTN varten +RTN, maajohto maajohtoon.

Attention Câblez l'approvisionnement d'alimentation CC En utilisant les crochets appropriés à l'extrémité de câblage. En reliant la puissance, l'ordre approprié de câblage est rectifié pour rectifier, +RTN à +RTN, puis –48 V à –48 V. En débranchant la puissance, l'ordre approprié de câblage est –48 V à –48 V, +RTN à +RTN, a alors rectifié pour rectifier. Notez que le fil de masse devrait toujours être relié d'abord et débranché pour la dernière fois. Notez que le fil de masse devrait toujours être relié d'abord et débranché pour la dernière fois.

Warnung Die Stromzufuhr ist nur mit geeigneten Ringösen an das DC Netzteil anzuschliessen. Die richtige Anschlusssequenz ist: Erdanschluss zu Erdanschluss, +RTN zu +RTN und dann -48V zu -48V. Die richtige Sequenz zum Abtrennen der Stromversorgung ist -48V zu -48V, +RTN zu +RTN und dann Erdanschluss zu Erdanschluss. Es ist zu beachten dass der Erdanschluss immer zuerst angeschlossen und als letztes abgetrennt wird.

Avvertenza Mostra la morsettiera dell alimentatore CC. Cablare l'alimentatore CC usando i connettori adatti all'estremità del cablaggio, come illustrato. La corretta sequenza di cablaggio è da massa a massa, da positivo a positivo (da linea ad L) e da negativo a negativo (da neutro a N). Tenere presente che il filo di massa deve sempre venire collegato per primo e scollegato per ultimo.

Advarsel Riktig tilkoples tilkoplingssekvens er jord til jord, +RTN til +RTN, –48 V til – 48 V. Riktig frakoples tilkoplingssekvens er –48 V til – 48 V, +RTN til +RTN, jord til jord.

Aviso Ate con alambre la fuente de potencia cc Usando los terminales apropiados en el extremo del cableado. Al conectar potencia, la secuencia apropiada del cableado se muele para moler, +RTN a +RTN, entonces –48 V a –48 V. Al desconectar potencia, la secuencia apropiada del cableado es –48 V a –48 V, +RTN a +RTN, entonces molió para moler. Observe que el alambre de tierra se debe conectar siempre primero y desconectar por último.

Copyright © 2018, Juniper Networks, Inc.

Observe que el alambre de tierra se debe conectar siempre primero y desconectar por último.

¡Atención! Wire a fonte de alimentação de DC Usando os talões apropriados na extremidade da fiação. Ao conectar a potência, a seqüência apropriada da fiação é moída para moer, +RTN a +RTN, então –48 V a –48 V. Ao desconectar a potência, a seqüência apropriada da fiação é –48 V a –48 V, +RTN a +RTN, moeu então para moer. Anote que o fio à terra deve sempre ser conectado primeiramente e desconectado por último. Anote que o fio à terra deve sempre ser conectado primeiramente e desconectado por último.

Varning! Korrekt kopplingssekvens ar jord till jord, +RTN till +RTN, –48 V till –48 V. Korrekt kopplas kopplingssekvens ar –48 V till –48 V, +RTN till +RTN, jord till jord.

DC Power Wiring Terminations Warning

WARNING: When stranded wiring is required, use approved wiring terminations, such as closed-loop or spade-type with upturned lugs. These terminations must be the appropriate size for the wires and must clamp both the insulation and conductor.

Waarschuwing Wanneer geslagen bedrading vereist is, dient u bedrading te gebruiken die voorzien is van goedgekeurde aansluitingspunten, zoals het gesloten-lus type of het grijperschop type waarbij de aansluitpunten omhoog wijzen. Deze aansluitpunten dienen de juiste maat voor de draden te hebben en dienen zowel de isolatie als de geleider vast te klemmen.

Varoitus Jos säikeellinen johdin on tarpeen, käytä hyväksyttyä johdinliitäntää, esimerkiksi suljettua silmukkaa tai kourumaista liitäntää, jossa on ylöspäin käännetyt kiinnityskorvat. Tällaisten liitäntöjen tulee olla kooltaan johtimiin sopivia ja niiden tulee puristaa yhteen sekä eristeen että johdinosan.

Attention Quand des fils torsadés sont nécessaires, utiliser des douilles terminales homologuées telles que celles à circuit fermé ou du type à plage ouverte avec cosses rebroussées. Ces douilles terminales doivent être de la taille qui convient aux fils et doivent être refermées sur la gaine isolante et sur le conducteur.

Warnung Wenn Litzenverdrahtung erforderlich ist, sind zugelassene Verdrahtungsabschlüsse, z.B. für einen geschlossenen Regelkreis oder gabelförmig, mit nach oben gerichteten Kabelschuhen zu verwenden. Diese Abschlüsse sollten die angemessene Größe für die Drähte haben und sowohl die Isolierung als auch den Leiter festklemmen.

Avvertenza Quando occorre usare trecce, usare connettori omologati, come quelli a occhiello o a forcella con linguette rivolte verso l'alto. I connettori

Copyright © 2018, Juniper Networks, Inc.

devono avere la misura adatta per il cablaggio e devono serrare sia l'isolante che il conduttore.

Advarsel Hvis det er nødvendig med flertrådede ledninger, brukes godkjente ledningsavslutninger, som for eksempel lukket sløyfe eller spadetype med oppoverbøyde kabelsko. Disse avslutningene skal ha riktig størrelse i forhold til ledningene, og skal klemme sammen både isolasjonen og lederen.

Aviso Quando forem requeridas montagens de instalação eléctrica de cabo torcido, use terminações de cabo aprovadas, tais como, terminações de cabo em circuito fechado e planas com terminais de orelha voltados para cima. Estas terminações de cabo deverão ser do tamanho apropriado para os respectivos cabos, e deverão prender simultaneamente o isolamento e o fio condutor.

¡Atención! Cuando se necesite hilo trenzado, utilizar terminales para cables homologados, tales como las de tipo "bucle cerrado" o "espada", con las lengüetas de conexión vueltas hacia arriba. Estos terminales deberán ser del tamaño apropiado para los cables que se utilicen, y tendrán que sujetar tanto el aislante como el conductor.

Varning! När flertrådiga ledningar krävs måste godkända ledningskontakter användas, t.ex. kabelsko av sluten eller öppen typ med uppåtvänd tapp. Storleken på dessa kontakter måste vara avpassad till ledningarna och måste kunna hålla både isoleringen och ledaren fastklämda.

Multiple Power Supplies Disconnection Warning

WARNING: The network device has more than one power supply connection. All connections must be removed completely to remove power from the unit completely.

Waarschuwing Deze eenheid heeft meer dan één stroomtoevoerverbinding; alle verbindingen moeten volledig worden verwijderd om de stroom van deze eenheid volledig te verwijderen.

Varoitus Tässä laitteessa on useampia virtalähdekytkentöjä. Kaikki kytkennät on irrotettava kokonaan, jotta virta poistettaisiin täysin laitteesta.

Attention Cette unité est équipée de plusieurs raccordements d'alimentation. Pour supprimer tout courant électrique de l'unité, tous les cordons d'alimentation doivent être débranchés.

Warnung Diese Einheit verfügt über mehr als einen Stromanschluß; um Strom gänzlich von der Einheit fernzuhalten, müssen alle Stromzufuhren abgetrennt sein.

Avvertenza Questa unità ha più di una connessione per alimentatore elettrico; tutte le connessioni devono essere completamente rimosse per togliere l'elettricità dall'unità.

Advarsel Denne enheten har mer enn én strømtilkobling. Alle tilkoblinger må kobles helt fra for å eliminere strøm fra enheten.

Aviso Este dispositivo possui mais do que uma conexão de fonte de alimentação de energia; para poder remover a fonte de alimentação de energia, deverão ser desconectadas todas as conexões existentes.

¡Atención! Esta unidad tiene más de una conexión de suministros de alimentación; para eliminar la alimentación por completo, deben desconectarse completamente todas las conexiones.

Varning! Denna enhet har mer än en strömförsörjningsanslutning; alla anslutningar måste vara helt avlägsnade innan strömtillförseln till enheten är fullständigt bruten.

TN Power Warning

WARNING: The device is designed to work with a TN power system.

Waarschuwing Het apparaat is ontworpen om te functioneren met TN energiesystemen.

Varoitus Koje on suunniteltu toimimaan TN-sähkövoimajärjestelmien yhteydessä.

Attention Ce dispositif a été conçu pour fonctionner avec des systèmes d'alimentation TN.

Warnung Das Gerät ist für die Verwendung mit TN-Stromsystemen ausgelegt.

Avvertenza Il dispositivo è stato progettato per l'uso con sistemi di alimentazione TN.

Advarsel Utstyret er utfomet til bruk med TN-strømsystemer.

Aviso O dispositivo foi criado para operar com sistemas de corrente TN.

¡Atención! El equipo está diseñado para trabajar con sistemas de alimentación tipo TN.

Varning! Enheten är konstruerad för användning tillsammans med elkraftssystem av TN-typ.

Copyright © 2018, Juniper Networks, Inc.

PART 4

Installation

- Before You Begin on page 373
- Installing a QFX3100 Director Device on page 377
- Installing a QFX3008-I Interconnect Device on page 389
- Installing QFX3008-I Optional Components on page 429
- Installing a QFX5100 Node Device on page 433
- Installing a QFX3600 Node Device on page 453
- Installing a QFX3500 Node Device on page 473
- Installing the Control Plane Network on page 491
- Cabling a Copper-Based Control Plane for the QFX3000-G QFabric System on page 497
- Cabling a Fiber-Based Control Plane for the QFX3000-G QFabric System on page 519
- Cabling the Data Plane for the QFX3000-G QFabric System on page 545
- Performing the Initial Configuration on page 551

Copyright © 2018, Juniper Networks, Inc.

CHAPTER 27

Before You Begin

- QFX3000-G QFabric System Installation Overview on page 373

QFX3000-G QFabric System Installation Overview

A QFX3000-G QFabric system is formed by interconnecting QFX3500, QFX3600, and QFX5100 Node devices, QFX3008-I Interconnect devices, and QFX3100 Director devices. Two Virtual Chassis, composed of four EX4200 switches each, are used to interconnect the control plane and management network. For more information about the role of each device in the QFX3000-G QFabric system see "Understanding QFX3000-G QFabric System Hardware Configurations" on page 10.

Before you begin to install the QFX3000-G QFabric system:

- Read "General Safety Guidelines and Warnings" on page 329, with particular attention to "Chassis Lifting Guidelines for a QFX3008-I Interconnect Device" on page 338.
- Review "Planning a QFX3000-G QFabric System Deployment" on page 204 and the topics it references. The installation should not begin until you have completed the site preparation checklists for each device type:
  - Site Preparation Checklist for a QFX3100 Director Device on page 208
  - Site Preparation Checklist for a QFX3008-I Interconnect Device on page 210
  - Site Preparation Checklist for a QFX5100 Device on page 211
  - Site Preparation Checklist for a QFX3600 or QFX3600-I Device on page 212
  - Site Preparation Checklist for a QFX3500 Device on page 213
  - Site Preparation Checklist for EX4200 Switches on page 216

Copyright © 2018, Juniper Networks, Inc.

To install a QFX3000-G QFabric system:

1. Install all the devices in their permanent location, connect the devices to earth ground, and connect power to the devices. See:
   - Installing and Connecting a QFX3100 Director Device on page 377
   - Installing and Connecting a QFX3008-I Interconnect Device on page 389
   - Installing and Connecting a QFX5100 Device on page 433
   - Installing and Connecting a QFX3600 or QFX3600-I Device on page 453
   - Installing and Connecting a QFX3500 Device on page 473
   - Installing and Connecting an EX4200 Switch on page 491
2. Ensure that each Node device is set to Node device mode. By default, the devices work as standalone switches. You perform this step using the console (**CON**) port on each Node device. Leave the Node devices powered on. See *Converting the Device Mode for a QFabric System Component*.
3. Cable two Virtual Chassis of four EX4200 switches each. See *Understanding Virtual Chassis Hardware Configuration on an EX4200 Switch* and *Virtual Chassis Cabling Configuration Examples for EX4200 Switches*.
4. Interconnect the two Virtual Chassis using the 10-Gigabit Ethernet SFP+ uplink ports. These ports will later be configured in a LAG. See "Interconnecting Two Virtual Chassis for Copper-Based QFX3000-G QFabric System Control Plane Redundancy" on page 497.
5. Interconnect the two QFX3100 Director devices for control plane redundancy. See "Connecting QFX3100 Director Devices in a Director Group" on page 500.
6. Connect each QFX Series device to each Virtual Chassis for control plane interconnection. See:
   - Connecting QFX3100 Director Devices to a Copper-Based QFX3000-G QFabric System Control Plane Network on page 502
   - Connecting a QFX3008-I Interconnect Device to a Copper-Based QFX3000-G QFabric System Control Plane Network on page 505
   - Connecting a QFX5100 Node Device to a Copper-Based QFX3000-G QFabric System Control Plane Network on page 510
   - Connecting a QFX3600 Node Device to a Copper-Based QFX3000-G QFabric System Control Plane Network on page 512
   - Connecting a QFX3500 Node Device to a Copper-Based QFX3000-G QFabric System Control Plane Network on page 515
7. Connect each Node device to each QFX3008-I Interconnect Device for data plane interconnection. See:
   - Connecting a QFX3500 Node Device to a QFX3008-I Interconnect Device on page 548

Copyright © 2018, Juniper Networks, Inc.

- Connecting a QFX3600 Node Device to a QFX3008-I Interconnect Device on page 547
- Connecting a QFX5100 Node Device to a QFX3008-I Interconnect Device on page 545

8. Configure each Virtual Chassis using the recommended configuration described in *Example: Configuring the Virtual Chassis for a Copper-Based QFX3000-G QFabric System Control Plane*. Leave the Virtual Chassis powered on.

9. Power on each QFX3008-I Interconnect device. See "Powering On a QFX3008-I Interconnect Device" on page 425.

10. Power on the QFX3100 Director devices and complete the initial configuration for the QFX3000-G QFabric system described in "Performing the QFabric System Initial Setup on a QFX3100 Director Group" on page 551.

Related Documentation

- *QFabric System Initial and Default Configuration Information*

Copyright © 2018, Juniper Networks, Inc.

CHAPTER 28

Installing a QFX3100 Director Device

- Installing and Connecting a QFX3100 Director Device on page 377
- Unpacking a QFX3100 Director Device on page 378
- Mounting a QFX3100 Director Device on Two Posts in a Rack or Cabinet on page 380
- Mounting a QFX3100 Director Device on Four Posts in a Rack or Cabinet on page 381
- Connecting AC Power to a QFX3100 Director Device on page 383
- Powering On a QFX3100 Director Device on page 385
- Connecting a QFX Series Device to a Management Console on page 386

Installing and Connecting a QFX3100 Director Device

To install and connect a QFX3100 Director device:

1. Follow instructions in "Unpacking a QFX3100 Director Device" on page 378.

2. Mount the QFX3100 Director device by following instructions appropriate for your site:
   - "Mounting a QFX3100 Director Device on Two Posts in a Rack or Cabinet" on page 380 (using the mounting brackets provided)
   - "Mounting a QFX3100 Director Device on Four Posts in a Rack or Cabinet" on page 381 (using the mounting brackets provided)
3. Follow instructions in "Connecting AC Power to a QFX3100 Director Device" on page 383 to connect power.

4. See "QFX3000-G QFabric System Installation Overview" on page 373 for information about the steps to install and configure your QFX3000-G QFabric system. See *QFX3000-M QFabric System Installation Overview* for information about the steps to install and configure your QFX3000-M QFabric system.

Related Documentation

- Rack Requirements for a QFX3100 Director Device on page 230
- Cabinet Requirements for a QFX3100 Director Device on page 238
- Clearance Requirements for Airflow and Hardware Maintenance for a QFX3100 Director Device on page 245

Copyright © 2018, Juniper Networks, Inc.

Unpacking a QFX3100 Director Device

The QFX3100 Director devices are shipped in a cardboard carton, secured with foam packing material. The carton also contains an accessory box and quick start instructions.

CAUTION: **QFX3100 Director devices are maximally protected inside the shipping carton. Do not unpack the Director devices until you are ready to begin installation.**

To unpack a QFX3100 Director device (see Figure 147 on page 379):

1. Move the shipping carton to a staging area as close to the installation site as possible but where you have enough room to remove the system components.
2. Position the carton so that the arrows are pointing up.
3. Open the top flaps on the shipping carton.
4. Remove the accessory box and verify the contents against the parts inventory.
5. Pull out the packing material holding the QFX3100 Director device in place.
6. Verify the components received against the inventory provided in Table 130 on page 379.
7. Save the shipping carton and packing materials in case you need to move or ship the device later.

Copyright © 2018, Juniper Networks, Inc.

Figure 147: Unpacking a QFX3100 Director Device

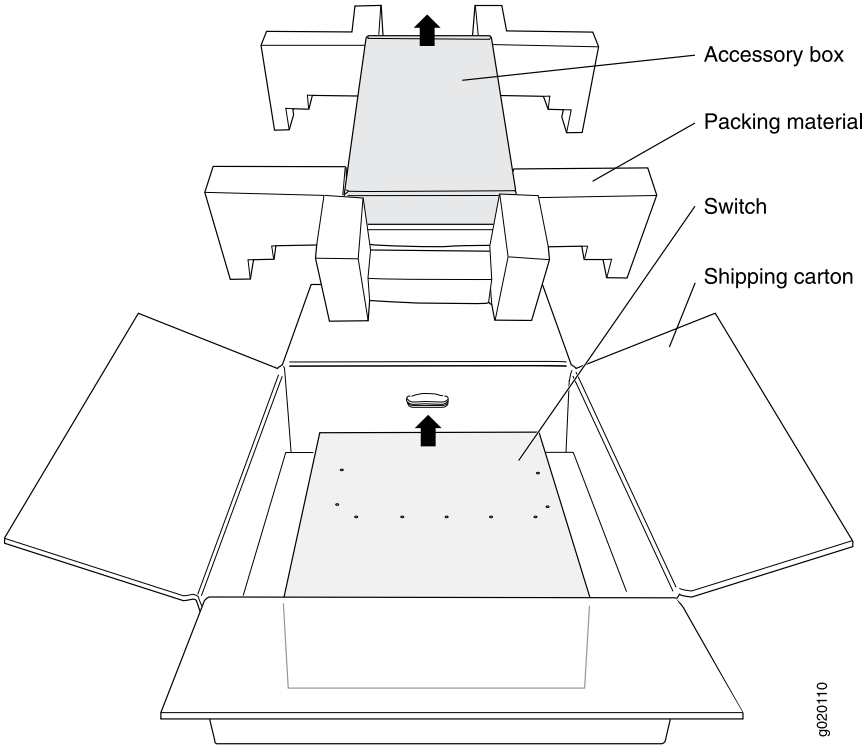

Table 130: Inventory of Components Provided with a QFX3100 Director Device

Component	Quantity
QFX3100 Director device	1
Fan module (installed)	3
AC power supply module (installed)	2
4-port Ethernet network module (installed)	2
Hard disk drive (HDD) module (installed)	2
Mounting screws	8
Two-post rack-mount kit	1
Four-post rack-mount kit	1

Related Documentation

- Installing and Connecting a QFX3100 Director Device on page 377

Mounting a QFX3100 Director Device on Two Posts in a Rack or Cabinet

You can mount a QFX3100 Director device on two posts of a 19-in. rack or cabinet by using the mounting brackets provided with the device. (The remainder of this topic uses "rack" to mean "rack or cabinet.")

You can mount the QFX3100 Director device on four posts of a four-post rack by using the side rail brackets provided with the device. See "Mounting a QFX3100 Director Device on Four Posts in a Rack or Cabinet" on page 381.

Before mounting the device on two posts in a rack:

- Verify that the site meets the requirements described in "Site Preparation Checklist for a QFX3100 Director Device" on page 208.
- Place the rack in its permanent location, allowing adequate clearance for airflow and maintenance, and secure it to the building structure.
- Read "General Safety Guidelines and Warnings" on page 329.
- Remove the device from the shipping carton (see "Unpacking a QFX3100 Director Device" on page 378).

Ensure that you have the following parts and tools available:

- Electrostatic discharge (ESD) grounding strap (provided)
- Phillips (+) screwdriver, number 2
- Four mid-mount mounting brackets and mounting screws (provided)
- Screws to secure the chassis to the rack (not provided)

NOTE: **One person must be available to lift the QFX3100 Director device while another secures it to the rack.**

CAUTION: **If you are mounting multiple units on the rack, mount the heaviest unit at the bottom and mount the others from bottom to top in order of decreasing weight.**

To mount the QFX3100 Director device on two posts in a rack:

1. Place the QFX3100 Director device on a flat, stable surface.
2. Align one mid-mount bracket to the mid-mount bracket holes near the center of the side of the QFX3100 Director device. Ensure that the bracket is aligned with the mounting holes and that the bracket face is facing the rack post.
3. Attach the mounting bracket to the QFX3100 Director device.

Copyright © 2018, Juniper Networks, Inc.

4. Mount the attached mounting bracket to the rack post. Tighten all screws.

5. Attach the mounting bracket on the opposite end of the same side to the QFX3100 Director device and mount it to the rack post. Tighten all screws.

6. Repeat this procedure for the mounting brackets on the opposite side of the QFX3100 Director device. Tighten all screws.

7. Ensure that the QFX3100 Director device chassis is level by verifying that all screws on one side of the rack are aligned with the screws on the other side. See Figure 148 on page 381.

Figure 148: Mounting the QFX3100 Director Device on Two Posts in a Rack

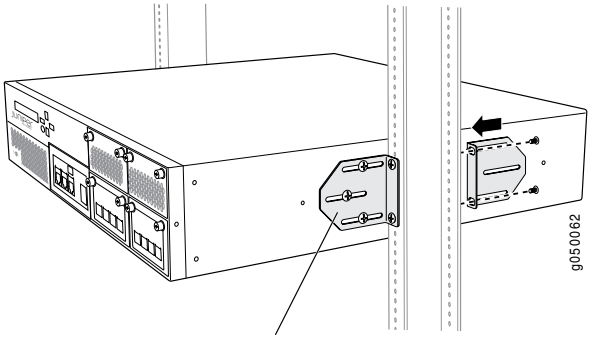

Attach the front bracket to the chassis, and secure the chassis to the post. Attach the rear bracket to the other side of the post, and secure the chassis to the rear bracket, adjusting the bracket width as needed.

Related Documentation

- Rack-Mounting and Cabinet-Mounting Warnings on page 343
- Installing and Connecting a QFX3100 Director Device on page 377
- Connecting AC Power to a QFX3100 Director Device on page 383

Mounting a QFX3100 Director Device on Four Posts in a Rack or Cabinet

You can mount a QFX3100 Director device on four posts of a 19-in. rack or cabinet by using the adjustable rear mounting brackets provided. (The remainder of this topic uses “rack” to mean “rack or cabinet.”)

Before mounting the QFX3100 Director device on four posts in a rack:

- Verify that the site meets the requirements described in “Site Preparation Checklist for a QFX3100 Director Device” on page 208.
- Place the rack in its permanent location, allowing adequate clearance for airflow and maintenance, and secure it to the building structure.

- Read "General Safety Guidelines and Warnings" on page 329.
- Remove the QFX3100 Director device from the shipping carton (see "Unpacking a QFX3100 Director Device" on page 378).

Ensure that you have the following parts and tools available:

- Electrostatic discharge (ESD) grounding strap (provided).
- Phillips (+) screwdriver, number 2.
- Screws to secure the chassis and mounting brackets to the rack (not provided).
- One pair of adjustable rear mounting brackets (provided). These mounting brackets support the rear of the chassis, and must be installed.
- Screws to attach the mounting brackets to the chassis (provided).

CAUTION: **If you are mounting multiple units on a rack, mount the heaviest unit at the bottom of the rack and mount the other units from the bottom of the rack to the top in decreasing order of the weight of the units.**

To mount the QFX3100 Director device on four posts in a rack:

1. Place the QFX3100 Director device on a flat, stable surface.
2. Measure the distance between the front and rear rack rails. Using this measurement, attach the adjustable rear mounting brackets on the chassis using the provided screws.
3. Flip the hinged rack-mounting plates at the end of the brackets outward.

   NOTE: **The device weighs approximately 41.2 lb (18.73 kg). Installing the QFX3100 Director device in a rack or cabinet requires one person to lift it and a second person to secure it to the rack.**

4. Have one person grasp both sides of the device, lift it, and position it in the rack, aligning the bracket holes with the holes in the rack.
5. Have a second person install a mounting screw—and cage nut and washer if your rack requires them—in each of the four bracket holes to secure the device to the front rack rails.
6. While still supporting the chassis, have the second person install a mounting screw—and cage nut and washer if your rack requires them—in each of the four bracket

Copyright © 2018, Juniper Networks, Inc.

holes on the adjustable rear mounting brackets to secure the device to the rear rack rails.

7. Ensure that the chassis is level by verifying that all the screws on the front of the rack are aligned with the screws at the back of the rack. See Figure 149 on page 383.

Figure 149: Mounting a QFX3100 Director Device on Four Posts in a Rack or Cabinet

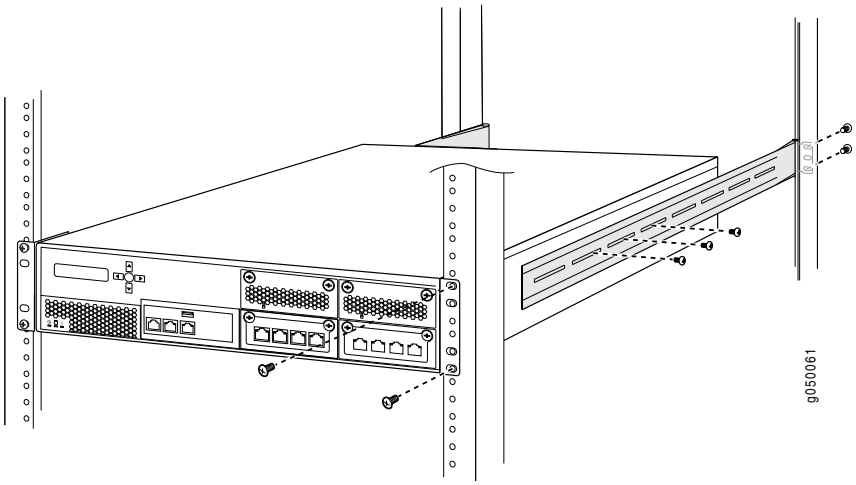

Related Documentation

- Connecting Earth Ground to an EX Series Switch on page 175
- Connecting AC Power to a QFX3100 Director Device on page 383
- Installing and Connecting a QFX3100 Director Device on page 377
- Rack-Mounting and Cabinet-Mounting Warnings on page 343

Connecting AC Power to a QFX3100 Director Device

The power supply in a QFX3100 Director device is a hot-removable and hot-insertable field-replaceable unit (FRU) located on the far right side of the rear panel. You can remove and replace a single power supply without powering off the QFX3100 Director device or disrupting QFX3100 Director device functions.

Before you begin connecting AC power to a QFX3100 Director device:

- Install the power supply in the chassis. See "Installing a Power Supply in a QFX3100 Director Device (includes video)" on page 589.

NOTE: **Each power supply must be connected to a dedicated power source outlet to ensure power supply redundancy.**

Ensure that you have the following parts and tools available:

- A power cord appropriate for your geographical location

To connect AC power to a QFX3100 Director device (see Figure 150 on page 384):

1. Ensure that the power supplies are fully inserted in the QFX3100 Director device.

2. Locate the power cords shipped with the QFX3100 Director device; the cords have plugs appropriate for your geographical location. See "AC Power Cord Specifications for a QFX3100 Director Device" on page 277.

   WARNING: **Ensure that the power cord does not block access to QFX3100 Director device components or drape where people can trip on it.**

3. Insert the coupler end of the power cord into the AC power cord inlet on the AC power supply faceplate (see Figure 150 on page 384).

Figure 150: Connecting an AC Power Cord to an AC Power Supply in a QFX3100 Director Device

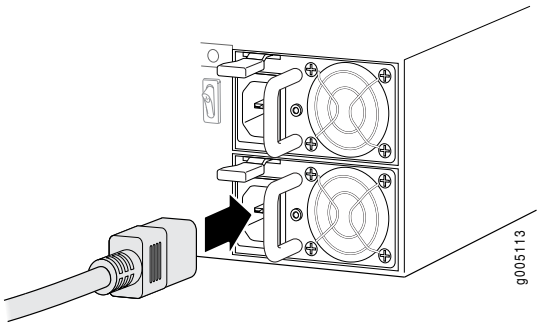

4. If the AC power source outlet has a power switch, set it to the OFF (O) position.

5. Insert the power cord plug into an AC power source outlet.

6. If the AC power source outlet has a power switch, set it to the ON (|) position.

7. Repeat these steps for the second AC power supply.

8. Press the power switch on the rear panel of the QFX3100 Director device to power on the device.

Copyright © 2018, Juniper Networks, Inc.

NOTE: Momentarily pressing the power switch causes the system to power on or causes a power event to the operating system, which causes a graceful shutdown. Pressing the power switch for 4 seconds or longer causes an abrupt power shutdown.

9. Verify that the power LED on the power supply is lit and is on steadily.

Related Documentation

- Installing and Connecting a QFX3100 Director Device on page 377
- AC Power Supply in a QFX3100 Director Device on page 34

Powering On a QFX3100 Director Device

Before you power on the QFX3100 Director device, ensure that:

- All required QFX3100 Director device components are installed.
- You understand how to protect the QFX3100 Director device from electrostatic damage. See "Prevention of Electrostatic Discharge Damage" on page 360.

Ensure that you have the following parts and tools available to power on the QFX3100 Director device:

- An external management device such as a PC to monitor the startup process—For connecting a management device to the console port, see "Connecting a QFX Series Device to a Management Console" on page 386. For connecting a management device to the management port, see "Connecting a QFX3100 Director Device to a Network for Out-of-Band Management" on page 505.

  NOTE: You cannot use the management (MGMT) port to perform the initial configuration of the QFX3100 Director device. You must configure the management ports before you can successfully connect to the QFX3100 Director device using these ports. See "Performing the QFabric System Initial Setup on a QFX3100 Director Group" on page 551.

When you power on the QFX3100 Director devices in the Director group for the first time the first device to be powered on assumes the Director Group 0 (*dg0*) role. The second device to be powered on assumes the Director Group 1 (*dg1*`) role.

To power on the QFX3100 Director device:

1. Ensure that the power supplies are fully inserted in the QFX3100 Director device and that each of their handles is flush against the faceplate.

2. Ensure that the source power cord is inserted securely into the appliance inlet for each AC power supply.

3. Switch on the site circuit breakers.

4. Press the power switch on the rear panel of the QFX3100 Director device to power on the device.

> NOTE: Pressing the power switch momentarily either causes the system to power on or causes a graceful shutdown. Pressing the power switch for 4 seconds or longer causes an abrupt power shutdown.

5. Observe the power supply faceplate LEDs. If the power supply is installed correctly and functioning normally, the AC power supply LED is green.

6. On the external management device, monitor the startup process to ensure that the system boots properly.

> NOTE: After you power on a power supply, wait for at least 60 seconds before you turn it off. After you power off a power supply, wait for at least 60 seconds before you turn it back on.

Related Documentation

- Powering Off a QFX3100 Director Device on page 559
- AC Power Supply in a QFX3100 Director Device on page 34
- AC Power Cord Specifications for a QFX3100 Director Device on page 277

Connecting a QFX Series Device to a Management Console

The QFX Series has a console port with an RJ-45 connector. Use the console port to connect the device to a management console or to a console server.

Ensure that you have an RJ-45 to DB-9 rollover cable available. An RJ-45 cable with an RJ-45 to DB-9 adapter is provided with the device.

> NOTE: If your laptop or PC does not have a DB-9 male connector pin and you want to connect your laptop or PC directly to the QFX Series, use a combination of the RJ-45 cable and RJ-45 to DB-9 adapter supplied with the device and a USB to DB-9 male adapter. You must provide the USB to DB-9 male adapter.

To connect the QFX Series to a management console (see Figure 151 on page 387 and Figure 152 on page 387):

1. Connect one end of the Ethernet cable to the console port (labeled **CON**).

 Copyright © 2018, Juniper Networks, Inc.

2. Connect the other end of the Ethernet cable into the console server (see Figure 151 on page 387) or management console (see Figure 152 on page 387).

Figure 151: Connecting the QFX Series to a Management Console Through a Console Server

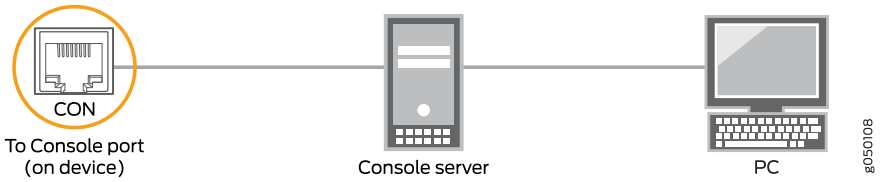

Figure 152: Connecting the QFX Series Directly to a Management Console

Related Documentation

- *Console Port Connector Pinouts for the QFX Series*
- *Configuring Console and Auxiliary Port Properties*

Copyright © 2018, Juniper Networks, Inc.

CHAPTER 29

Installing a QFX3008-I Interconnect Device

- Installing and Connecting a QFX3008-I Interconnect Device on page 389
- Unpacking a QFX3008-I Interconnect Device on page 390
- Parts Inventory (Packing List) for a QFX3008-I Interconnect Device on page 391
- Installing QFX3008-I Interconnect Device Mounting Hardware on Four-Post Racks or Cabinets on page 394
- Installing QFX3008-I Interconnect Device Mounting Hardware on Two-Post Racks on page 401
- Mounting a QFX3008-I Interconnect Device on a Rack or Cabinet Using a Mechanical Lift on page 405
- Connecting Earth Ground to a QFX3008-I Interconnect Device on page 409
- Connecting AC Power to a QFX3008-I Interconnect Device with Single-Phase Wiring Trays on page 411
- Preparing Delta and Wye Three-Phase Power Cords on page 413
- Connecting AC Power to a QFX3008-I Interconnect Device with Three-Phase Delta Wiring Trays on page 418
- Connecting AC Power to a QFX3008-I Interconnect Device with Three-Phase Wye Wiring Trays on page 422
- Powering On a QFX3008-I Interconnect Device on page 425
- Connecting a QFX Series Device to a Management Console on page 426

Installing and Connecting a QFX3008-I Interconnect Device

Before you begin, ensure that the installation site meets the requirements described in "Site Preparation Checklist for a QFX3008-I Interconnect Device" on page 210.

To install and connect a QFX3008-I Interconnect device:

1. Follow the instructions in "Unpacking a QFX3008-I Interconnect Device" on page 390.

2. Install the mounting hardware on your four-post or two-post rack or cabinet by following the instructions in "Installing QFX3008-I Interconnect Device Mounting

Hardware on Four-Post Racks or Cabinets" on page 394 or "Installing QFX3008-I Interconnect Device Mounting Hardware on Two-Post Racks" on page 401.

3. Mount the device by following the instructions in "Mounting a QFX3008-I Interconnect Device on a Rack or Cabinet Using a Mechanical Lift" on page 405.

4. Connect the QFX3008-I Interconnect device to earth ground.

   See "Connecting Earth Ground to a QFX3008-I Interconnect Device" on page 409.

5. Connect power to the device.

   See "Connecting AC Power to a QFX3008-I Interconnect Device with Single-Phase Wiring Trays" on page 411, "Connecting AC Power to a QFX3008-I Interconnect Device with Three-Phase Delta Wiring Trays" on page 418, and "Connecting AC Power to a QFX3008-I Interconnect Device with Three-Phase Wye Wiring Trays" on page 422.

6. (Optional) Install the cable management system or lockable front doors, by following the instructions in "Installing the Cable Management System on a QFX3008-I Interconnect Device" on page 429 and "Installing the Lockable Front Doors on a QFX3008-I Interconnect Device" on page 430.

7. See "QFX3000-G QFabric System Installation Overview" on page 373 for information about the next steps to install and configure your QFX3000 QFabric system.

Related Documentation

- Rack Requirements for a QFX3008-I Interconnect Device on page 231
- Cabinet Requirements for a QFX3008-I Interconnect Device on page 239
- Clearance Requirements for Airflow and Hardware Maintenance for a QFX3008-I Interconnect Device on page 246
- Chassis Lifting Guidelines for a QFX3008-I Interconnect Device on page 338

Unpacking a QFX3008-I Interconnect Device

After you prepare the installation site as described in "Site Preparation Checklist for a QFX3008-I Interconnect Device" on page 210, you may unpack the device.

NOTE: **The device is maximally protected inside the shipping box. Do not unpack it until you are ready to begin installation.**

Before you begin, ensure that you have the following parts and tools available to unpack the QFX3008-I Interconnect Device:

- Phillips (+) screwdriver, number 2

Copyright © 2018, Juniper Networks, Inc.

- A 5/16-in. open-end or socket wrench to remove the bracket bolts from the shipping pallet
- A box cutter or packing knife to slice open the tape that seals the top of the box

The device ships in a cardboard box that has a two-layer wooden pallet base with foam cushioning between the layers. The device chassis is bolted to the pallet base. Quick Start installation instructions and a cardboard accessory box are also included in the shipping crate.

To unpack the device:

1. Move the shipping box to a staging area as close to the installation site as possible. Make sure there is enough space to remove components from the chassis if necessary. While the chassis is bolted to the pallet, you can use a forklift or pallet jack to move it.

2. Remove the cardboard cover, foam padding, and accessory box.

3. Unpack the accessory box and lay out the contents so that they are ready for use.

4. Verify that your order includes all appropriate parts. See "Parts Inventory (Packing List) for a QFX3008-I Interconnect Device" on page 391.

5. Use a 5/16-in. open-end or socket wrench and a number 2 Phillips screwdriver to remove the four sets of bracket bolts and screws that secure the chassis to the shipping pallet. Store the brackets and bolts inside the accessory box.

6. Save the shipping box, pallet, and packing materials in case you need to move or ship the device at a later time.

Related Documentation

- Mounting a QFX3008-I Interconnect Device on a Rack or Cabinet Using a Mechanical Lift on page 405

Parts Inventory (Packing List) for a QFX3008-I Interconnect Device

The device shipment includes a packing list. Check the parts you receive in the shipping crate against the items on the packing list. The packing list specifies the part number and description of each part in your order. The parts shipped depend on the configuration you order.

If any part on the packing list is missing, contact your customer service representative or contact Juniper Networks customer care from within the U.S. or Canada by telephone at 1-888-314-5822. For international-dial or direct-dial options in countries without toll-free numbers, see https://www.juniper.net/support/requesting-support.html .

Table 131 on page 392 lists the parts and their quantities in the packing list for a QFX3008-I Interconnect device.

Table 131: Parts List for QFX3008-I Interconnect Device Configurations

Component	Quantity
Chassis, including the midplane and rack-mounting brackets	1
Cable manager	1 (optional)
Lockable front door	1 (optional)
Control Boards	2
16-port QSFP+ front cards	1–8
Rear cards	8
Power supplies	6
Wiring trays	2
Top fan tray	1
Bottom fan tray and front panel display	1
Side fan trays	8
Front air filter	1
Side air filters	8
Cover panels for slots without installed components	Front card cover panels: 0–7

Table 132 on page 392, Table 133 on page 393, and Table 134 on page 393 list the parts contained in the accessory box.

Table 132: QFX3008-I Interconnect Device Accessory Kit Contents

Item	Quantity
Chassis grounding lug	1
UNC ¼-20 screws to attach the chassis grounding lug to the protective earth terminal on the chassis	2
Electrostatic discharge (ESD) grounding strap	1
RJ-45 cable and RJ-45 to DB-9 adapter for console port connection	1
QFX3008-I Interconnect Device Quick Start	1

 Copyright © 2018, Juniper Networks, Inc.

Table 132: QFX3008-I Interconnect Device Accessory Kit Contents (continued)

Item	Quantity
End User License Agreement (EULA)	1
RoHS Compliance and Warranty Information Card	1

Table 133: QFX3008-I Interconnect Device Rack Install Accessory Kit Contents

Item	Quantity
Four-post rack mounting shelf	1
Rear support bracket for four-post rack mounting	1
UNC 8/32 flat-head screws to attach the four-post rack mounting shelf to the rear support bracket	6
Rear anchor bracket for four-post rack mounting	2
UNC ¼-20 screws to attach the rear anchor bracket to the protective earth terminal on the chassis	2
M6 screws to attach the rear anchor bracket to the protective earth terminal on the chassis	2
Large mounting shelf for two-post rack mounting	1
Small mounting shelf for two-post rack mounting	1
Adjustable center-mounting flanges for two-post rack mounting	2
UNC 10/32 screws to attach center-mounting flanges to the chassis	12

Table 134: QFX3008-I Interconnect Device Wiring Tray Accessory Kit Part Contents

Item	Quantity
Strain relief connector	2 (delta or wye three-phase wiring trays only)
90-degree connector	2 (delta or wye three-phase wiring trays only)
Power cords	6 (single-phase wiring trays only)

Related Documentation

- Unpacking a QFX3008-I Interconnect Device on page 390
- QFX3008-I Interconnect Device Overview on page 37

Installing QFX3008-I Interconnect Device Mounting Hardware on Four-Post Racks or Cabinets

Before you install the QFX3008-I Interconnect device in a four-post rack or cabinet, you must first install mounting hardware and remove the center-mounting brackets from the chassis.

NOTE: In a rack, the device uses 21 U. You can mount two QFX3008-I Interconnect devices on a 42 U rack provided that the racks meet the strength requirements to support the combined weight of the devices. If you are mounting two QFX3008-I Interconnect devices on a rack, mount the first device on the bottom of the rack.

There are two styles of mounting hardware for the QFX3008-I Interconnect device. One style of mounting hardware uses a large shelf that spans the four rack posts and rests on a rear support bracket. The other style of mounting hardware uses a large shelf on the front posts, a smaller shelf on the rear posts, and spacer bars mounted to the rack posts to ensure proper alignment of rack-mounting screws. Figure 153 on page 395 and Figure 154 on page 398 depict the different styles of mounting hardware.

Depending on which style of mounting hardware you have, perform one of the first two tasks, then remove the center-mounting brackets from the chassis:

- Installing Four-Post Mounting Shelf and Rear Support Bracket for QFX3008-I Interconnect Device Four-Post Rack or Cabinet Mounting on page 394
- Installing Spacer Bars and Shelves for QFX3008-I Interconnect Device Four-Post Rack or Cabinet Mounting on page 397
- Removing the Adjustable Center-Mounting Brackets for QFX3008-I Interconnect Device Four-Post Rack or Cabinet Mounting on page 401

Installing Four-Post Mounting Shelf and Rear Support Bracket for QFX3008-I Interconnect Device Four-Post Rack or Cabinet Mounting

Figure 153 on page 395 depicts the four-post mounting shelf and rear support bracket mounting hardware. If the mounting hardware included with your QFX3008-I Interconnect device instead includes spacer bars and two shelves, see "Installing Spacer Bars and Shelves for QFX3008-I Interconnect Device Four-Post Rack or Cabinet Mounting" on page 397.

Copyright © 2018, Juniper Networks, Inc.

Figure 153: Installing Four-Post Mounting Shelf and Rear Support Bracket for QFX3008-I Interconnect Device Four-Post Rack or Cabinet Mounting

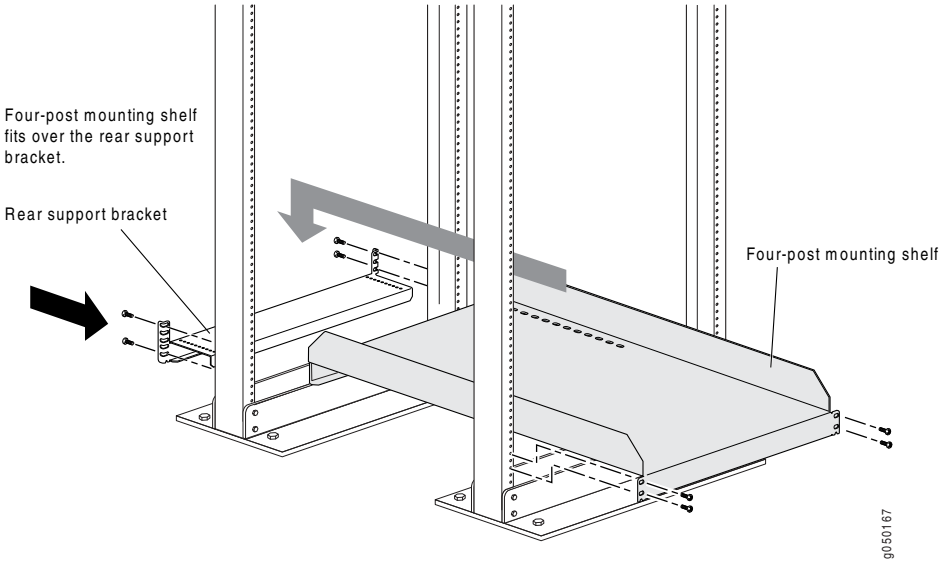

For a four-post rack or cabinet, Table 135 on page 395 specifies the holes in which you insert mounting screws (an **X** indicates a mounting hole location), and cage nuts if needed. The hole distances are relative to one of the standard "U" divisions on the rack.

Table 135: Four-Post Mounting Shelf and Rear Support Bracket Hole Locations

Hole	Distance Above U Division		Four-Post Mounting Shelf	Rear Support Bracket
6	3.25 in. (8.3 cm)	1.86 U		X
5	2.63 in. (6.7 cm)	1.5 U		X
4	2 in. (5.1 cm)	1.14 U		X
3	1.5 in. (3.8 cm)	0.86 U	X	X
2	0.88 in. (2.2 cm)	0.5 U	X	X
1	0.25 in. (0.6 cm)	0.14 U	X	X

- Installing Cage Nuts for the Four-Post Mounting Shelf and Support Bracket for QFX3008-I Interconnect Device Four-Post Rack or Cabinet Mounting on page 396
- Installing the Rear Support Bracket for QFX3008-I Interconnect Device Four-Post Rack or Cabinet Mounting on page 396
- Installing the Four-Post Mounting Shelf for QFX3008-I Interconnect Device Four-Post Rack or Cabinet Mounting on page 396

Installing Cage Nuts for the Four-Post Mounting Shelf and Support Bracket for QFX3008-I Interconnect Device Four-Post Rack or Cabinet Mounting

For racks without threaded holes, you must install cage nuts on the rack or cabinet rails in the locations specified in Table 135 on page 395 (an **X** indicates a mounting hole location).

Before you begin, ensure that you have 18 cage nuts appropriate for your rack or cabinet.

To install the cage nuts in the proper locations:

1. On the front rack or cabinet, install cage nuts in the holes specified in Table 135 on page 395 for the large shelf.

2. On the rear rack or cabinet, install cage nuts in the holes specified in Table 135 on page 395 for the support bracket.

Installing the Rear Support Bracket for QFX3008-I Interconnect Device Four-Post Rack or Cabinet Mounting

To mount the chassis on a four-post rack or cabinet, you must first install the four-post mounting shelf and rear support bracket on the rack or cabinet.

Before you begin, ensure that you have the following parts and tools available to install the rear support bracket:

- A Phillips (+) screwdriver, number 2 or 3, depending on the size of your rack mounting screws (not provided)
- 12 mounting screws appropriate for your rack to attach the rear support bracket to the rack (not provided)

To install the rear support bracket:

1. On the rear of each rear rack rail, partially insert a mounting screw 1 U below where you intend to install the chassis.

2. Install the rear support bracket on the rear of the rear rack rails. Rest the bottom slot of the rear support bracket on a mounting screw. The rear support bracket extends toward the center of the rack.

3. Partially insert screws into the open holes in the rear support bracket. Tighten all the screws.

Installing the Four-Post Mounting Shelf for QFX3008-I Interconnect Device Four-Post Rack or Cabinet Mounting

To mount the chassis on a four-post rack or cabinet, you must first install the four-post rack mounting shelf and rear support bracket on the rack or cabinet.

 Copyright © 2018, Juniper Networks, Inc.

Before you begin, ensure that you have the following parts and tools available to install the four-post rack mounting shelf:

- A Phillips (+) screwdriver, number 2 or 3, depending on the size of your rack mounting screws (not provided)
- Six mounting screws appropriate for your rack to attach the four-post rack mounting shelf to the rack (not provided)
- UNC 8/32 flat-head screws to attach the four-post rack mounting shelf to the rear support bracket (provided)

To install the four-post rack mounting shelf:

1. On the front of each front rack rail, partially insert a mounting screw 1 U below where you intend to install the chassis.

2. Install the four-post rack mounting shelf on the front rack rails. Rest the front of the four-post rack mounting shelf on the mounting screws you installed on the front rack rails. Rest the back of the four-post rack mounting shelf on top of the rear support bracket.

3. Partially insert screws into the open holes in the four-post rack mounting shelf. Tighten all the screws.

4. Fasten the four-post mounting shelf to the rear support bracket by partially inserting the flat-head screws provided in the accessory kit into the open holes on top of the four-post mounting shelf. Several holes are provided on top of the shelf. Two holes on each side of the shelf will align with the holes in the rear support bracket. Tighten all the screws.

Installing Spacer Bars and Shelves for QFX3008-I Interconnect Device Four-Post Rack or Cabinet Mounting

Figure 154 on page 398 depicts the spacer bars and small and large shelf mounting hardware. If the mounting hardware included with your QFX3008-I Interconnect device instead includes a large shelf that spans the four posts, and rear support bracket, see "Installing Four-Post Mounting Shelf and Rear Support Bracket for QFX3008-I Interconnect Device Four-Post Rack or Cabinet Mounting" on page 394.

Figure 154: Installing Spacer Bar and Shelves for QFX3008-I Interconnect Device Four-Post Rack or Cabinet Mounting

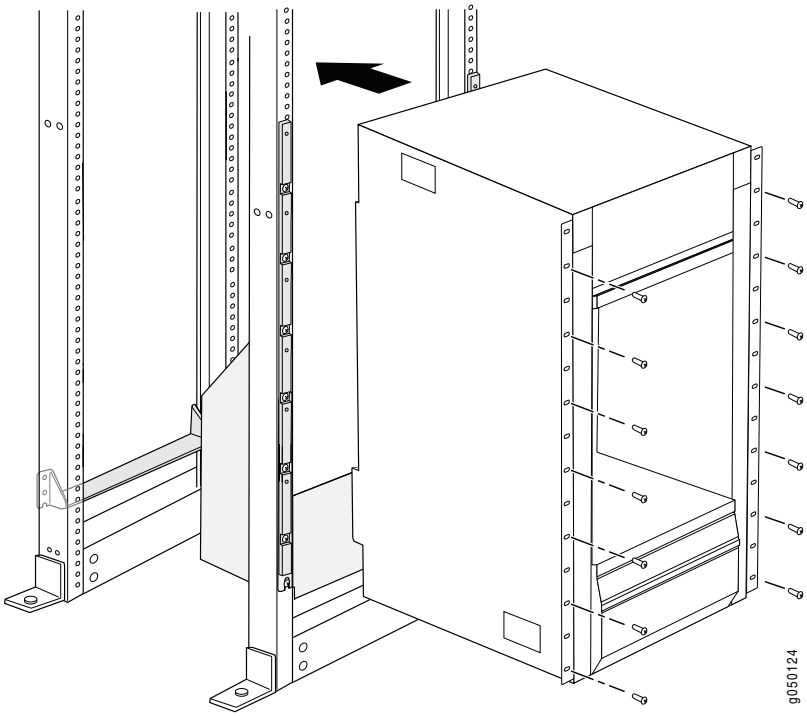

For a four-post rack or cabinet, Table 136 on page 398 specifies the holes in which you insert mounting screws (an **X** indicates a mounting hole location), and cage nuts if needed. The hole distances are relative to one of the standard "U" divisions on the rack. For reference, the bottom of all mounting shelves is at 0.04 in. (0.02 U) above a U division.

Table 136: Four-Post Rack or Cabinet Mounting Hole Locations

Hole	Distance Above U Division		Large Shelf	Spacer Bars	Small Shelf
51	29.51 in. (74.9 cm)	16.86 U		X	
42	24.26 in. (61.6 cm)	13.86 U		X	
33	19.01 in. (48.3 cm)	10.86 U		X	
30	17.26 in. (43.8 cm)	9.86 U	X		
24	13.76 in. (34.9 cm)	7.86 U		X	
15	8.51 in. (21.6 cm)	4.86 U		X	
6	3.26 in. (8.3 cm)	1.86 U		X	
3	1.51 in. (3.8 cm)	0.86 U			X

Copyright © 2018, Juniper Networks, Inc.

Table 136: Four-Post Rack or Cabinet Mounting Hole Locations (continued)

Hole	Distance Above U Division		Large Shelf	Spacer Bars	Small Shelf
2	0.88 in. (2.2 cm)	0.50 U	X		X
1	0.25 in. (0.6 cm)	0.14 U			X

- Installing Cage Nuts for QFX3008-I Interconnect Device Four-Post Rack or Cabinet Mounting on page 399
- Installing the Small Mounting Shelf for QFX3008-I Interconnect Device Four-Post Rack or Cabinet Mounting on page 399
- Installing the Large Mounting Shelf and Spacer Bars for QFX3008-I Interconnect Device Four-Post Rack or Cabinet Mounting on page 400

Installing Cage Nuts for QFX3008-I Interconnect Device Four-Post Rack or Cabinet Mounting

For racks without threaded holes, you must install cage nuts on the rack or cabinet rails in the locations specified in Table 136 on page 398 (an **X** indicates a mounting hole location).

Before you begin, ensure that you have 22 cage nuts appropriate for your rack or cabinet.

To install the cage nuts in the proper locations:

1. On the front rack or cabinet, install cage nuts in the holes specified in Table 136 on page 398 for the large shelf and the spacer bars.

2. On the rear rack or cabinet, install cage nuts in the holes specified in Table 136 on page 398 for the small shelf.

Installing the Small Mounting Shelf for QFX3008-I Interconnect Device Four-Post Rack or Cabinet Mounting

To mount the chassis on a four-post rack or cabinet, you must first install the mounting shelves and spacer bars on the rack or cabinet.

Before you begin, ensure that you have the following parts and tools available to install the small mounting shelf:

- A Phillips (+) screwdriver, number 2 or 3, depending on the size of your rack mounting screws
- Six mounting screws appropriate for your rack to attach the small mounting shelf to the rack

To install the small mounting shelf:

1. On the back of each rear rack rail, partially insert a mounting screw into the lowest hole specified in Table 136 on page 398 for the small shelf.

Copyright © 2018, Juniper Networks, Inc.

2. Install the small shelf on the back rack rails. Rest the bottom slot of each ear on a mounting screw. The small shelf installs on the back of the rear rails, extending toward the center of the rack. The bottom of the small shelf should align with the bottom of the large shelf.

3. Partially insert screws into the open holes in the ears of the small shelf. Tighten all the screws.

Installing the Large Mounting Shelf and Spacer Bars for QFX3008-I Interconnect Device Four-Post Rack or Cabinet Mounting

To mount the chassis on a four-post rack or cabinet, you must first install the mounting shelves and spacer bars on the rack or cabinet.

Before you begin, ensure that you have the following parts and tools available to install the large mounting shelf and spacer bars:

- A Phillips (+) screwdriver, number 2 or 3, depending on the size of your rack mounting screws
- 16 mounting screws appropriate for your rack to attach the large mounting shelf and spacer bars to the rack

To install the large mounting shelf and spacer bars:

1. On the front of each front rack rail, partially insert a mounting screw into the lowest hole specified in Table 136 on page 398 for the large shelf.

2. Install the large shelf on the front rack rails. Rest the bottom slot of each ear on a mounting screw.

3. Partially insert a mounting screw into the top hole in each ear of the large shelf. Tighten all the screws.

4. The device is shipped with each spacer bar attached to the rear of each front-mounting flange. Remove each spacer bar by removing the seven screws that fasten the spacer bar to the front-mounting bracket.

5. Place one of the spacer bars over an ear of the installed large shelf. Position the notch in the rear of the spacer bar so the upper part of the bar is flush with the rack rail and the lower part is flush with the ear of the shelf.

6. Insert a mounting screw into each of the nonthreaded holes in the recesses of the spacer bar to secure the spacer bar.

7. Repeat Step 5 and Step 6 for the other spacer bar.

8. Tighten all the screws.

 Copyright © 2018, Juniper Networks, Inc.

Removing the Adjustable Center-Mounting Brackets for QFX3008-I Interconnect Device Four-Post Rack or Cabinet Mounting

Before you begin, ensure that you have a number 2 Phillips (+) screwdriver.

To remove the adjustable center-mounting brackets:

1. Loosen the three screws at the top and bottom of each bracket.

2. Remove the center-mounting brackets.

TIP: Save the center-mounting brackets and screws in case you need to move the device to a two-post rack at a later time.

Related Documentation

- Site Preparation Checklist for a QFX3008-I Interconnect Device on page 210

Installing QFX3008-I Interconnect Device Mounting Hardware on Two-Post Racks

Before you install the QFX3008-I Interconnect device in a two-post rack, you must first install mounting hardware on the rack (see Figure 155 on page 402). If spacer bars were included in your shipment, they are not needed for this mounting option; however, you can leave them attached to the front-mounting brackets.

NOTE: In a rack, the device uses 21 U. You can mount two QFX3008-I Interconnect devices on a 42 U rack provided that the racks meet the strength requirements to support the combined weight of the devices. If you are mounting two QFX3008-I Interconnect devices on a rack, mount the first device on the bottom of the rack.

Figure 155: Installing the Mounting Hardware for a Two-Post Rack

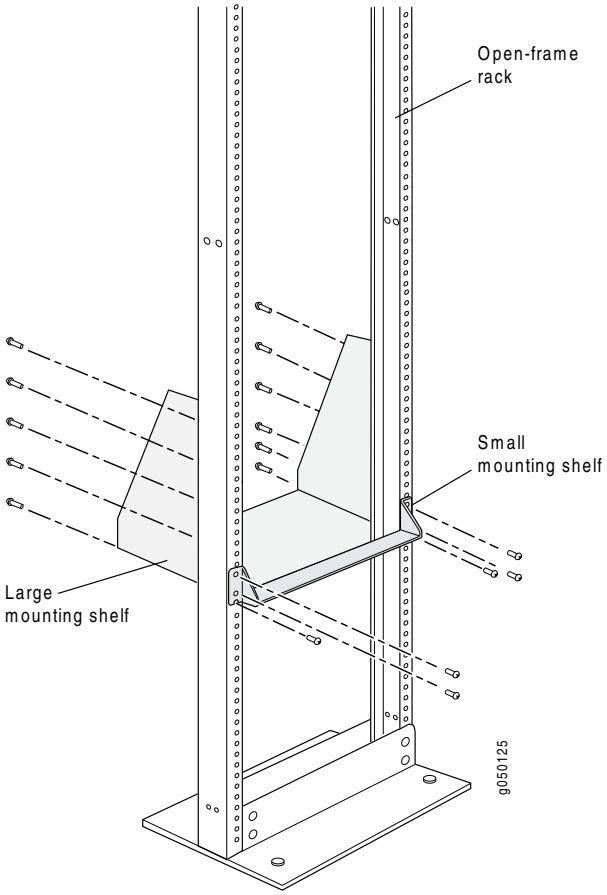

For a two-post rack, Table 137 on page 402 specifies the holes in which you insert mounting screws (an **X** indicates a mounting hole location), and cage nuts if needed. The hole distances are relative to one of the standard "U" divisions on the rack. For reference, the bottom of all mounting shelves is at 0.04 in. (0.02 U) above a U division.

Table 137: Two-Post Rack Mounting Hole Locations

Hole	Distance Above "U" Division		Large Shelf	Small Shelf
30	17.26 in. (43.8 cm)	9.86 U	X	
27	15.51 in. (39.4 cm)	8.86 U	X	
24	13.76 in. (34.9 cm)	7.86 U	X	
21	12.01 in. (30.5 cm)	6.86 U	X	
18	10.26 in. (26.0 cm)	5.86 U	X	
15	8.51 in. (21.6 cm)	4.86 U	X	

Copyright © 2018, Juniper Networks, Inc.

Table 137: Two-Post Rack Mounting Hole Locations (continued)

Hole	Distance Above "U" Division		Large Shelf	Small Shelf
12	6.76 in. (17.1 cm)	3.86 U	X	
9	5.01 in. (12.7 cm)	2.86 U	X	
6	3.26 in. (8.3 cm)	1.86 U	X	
3	1.51 in. (3.8 cm)	0.86 U	X	X
2	0.88 in. (2.2 cm)	0.50 U	X	X
1	0.25 in. (0.6 cm)	0.14 U		X

1. Installing Cage Nuts for QFX3008-I Interconnect Device Two-Post Rack Mounting on page 403
2. Installing the Small Mounting Shelf for QFX3008-I Interconnect Device Two-Post Rack Mounting on page 403
3. Installing the Large Mounting Shelf for QFX3008-I Interconnect Device Two-Post Rack Mounting on page 404

Installing Cage Nuts for QFX3008-I Interconnect Device Two-Post Rack Mounting

For racks without threaded holes, you must install cage nuts on the rack rails in the locations specified in Table 137 on page 402 (an X indicates a mounting hole location). The hole distances are relative to one of the standard "U" divisions on the rack rails. The bottom of all mounting shelves is at 0.04 in. (0.02 U) above a U division.

Before you begin, ensure that you have 28 cage nuts appropriate for your rack.

To install the cage nuts in the proper locations:

1. On the front rack rail, install cage nuts in the holes specified in Table 137 on page 402 for the small shelf.
2. On the front rack rail, install cage nuts for the center-mounting brackets. The center-mounting brackets have holes for rack-mounting screws, spaced at 3.5 in. (8.89 cm).
3. On the rear rack rail, install cage nuts in the holes specified in Table 137 on page 402 for the large shelf.

Installing the Small Mounting Shelf for QFX3008-I Interconnect Device Two-Post Rack Mounting

To mount the chassis on a two-post rack, you must first install the mounting shelves on the rack.

Before you begin, ensure that you have the following parts and tools available to install the small mounting shelf:

- A Phillips (+) screwdriver, number 2 or 3, depending on the size of your rack mounting screws
- Six mounting screws appropriate for your rack to attach the small mounting shelf to the rack

1. On the front of each rack rail, partially insert a mounting screw into the lowest hole specified in Table 137 on page 402 for the small shelf.
2. Install the small shelf on the rack. Rest the bottom slot of each ear on a mounting screw. The small shelf installs on the front of the rails, extending away from the rack. The bottom of the small shelf should align with the bottom of the large shelf
3. Partially insert screws into the open holes in the ears of the small shelf. Tighten all the screws.

Installing the Large Mounting Shelf for QFX3008-I Interconnect Device Two-Post Rack Mounting

To mount the chassis on a two-post rack, you must first install the mounting shelves on the rack.

Before you begin, ensure that you have the following parts and tools available to install the large mounting shelf:

- A Phillips (+) screwdriver, number 2 or 3, depending on the size of your rack mounting screws
- 22 mounting screws appropriate for your rack to attach the large mounting shelf to the rack

To install the large mounting shelf and spacer bars:

1. On the rear of each rack rail, partially insert a mounting screw into the lowest hole specified in Table 137 on page 402 for the large shelf.
2. Install the large shelf on the rack. Rest the bottom slot of each ear on a mounting screw.
3. Partially insert screws into the open holes in the ears of the large shelf. Tighten all the screws.

Related Documentation

- Understanding Interconnect Devices on page 14
- QFX3008-I Interconnect Device Overview on page 37
- Field-Replaceable Units in a QFX3008-I Interconnect Device on page 42

Copyright © 2018, Juniper Networks, Inc.

- Installing the Cable Management System on a QFX3008-I Interconnect Device on page 429

Mounting a QFX3008-I Interconnect Device on a Rack or Cabinet Using a Mechanical Lift

The QFX3008-I Interconnect device ships installed with front-mounting brackets and center-mounting brackets on the chassis for mounting the device on a 19-in. equipment rack or cabinet. (The remainder of this topic uses “rack” to mean “rack or cabinet.”) The chassis also comes with mounting shelves and brackets to support it in the rack.

Because of the chassis size and weight, we require using a mechanical lift to install the device.

CAUTION: **Before mounting the device in a rack, have a qualified technician verify that the rack is strong enough to support the device’s weight and is adequately supported at the installation site.**

NOTE: **In a rack, the chassis occupies 21 U. You can mount two devices on a 42 U rack provided that the racks meet the strength requirements to support the combined weight of the devices. If you are mounting two devices on a rack, mount the first device on the bottom of the rack.**

Before mounting a QFX3008-I Interconnect device in a rack:

1. Verify that the site meets the requirements described in “Site Preparation Checklist for a QFX3008-I Interconnect Device” on page 210.

2. Place the rack in its permanent location, allowing adequate clearance for airflow and maintenance, and secure it to the building structure. See“Clearance Requirements for Airflow and Hardware Maintenance for a QFX3008-I Interconnect Device” on page 246 for detailed information.

3. Read “General Safety Guidelines and Warnings” on page 329, with particular attention to “Chassis Lifting Guidelines for a QFX3008-I Interconnect Device” on page 338.

4. Unpack the device as described in “Unpacking a QFX3008-I Interconnect Device” on page 390.

5. In a four-post rack, install the mounting hardware at the desired position as described in “Installing QFX3008-I Interconnect Device Mounting Hardware on Four-Post Racks or Cabinets” on page 394. In a two-post rack, install the mounting hardware at the desired position as described in “Installing QFX3008-I Interconnect Device Mounting Hardware on Two-Post Racks” on page 401.

Copyright © 2018, Juniper Networks, Inc.

Before you begin, ensure that you have the following parts and tools available to mount the device in a rack:

- A mechanical lift with a load capacity of at least 750 lb (341 kg). If you do not have a lift rated for 750 lb (341 kg), you must remove all components from the chassis and use a lift rated for at least 250 lb (114 kg). The weight of an empty QFX3008-I Interconnect device and midplane is approximately 205 lb (93 kg).
- Phillips (+) screwdriver, number 2 or number 3, depending on the size of your rack mounting screws, for mounting the device in a rack (not provided)
- Mounting screws appropriate for your rack (not provided)
- Rear support anchors to secure the chassis to the four-post mounting shelf and rear support bracket (provided)

  NOTE: **Earlier versions of the four-post rack mounting hardware did not require the rear support anchors. If your four-post rack mounting hardware includes spacer bars and two shelves the rear support anchors are not required.**

- Four screws, two UNC 1/4-20 (right side) screws and two M6 (left side) screws, to secure the rear support anchors to the chassis (provided)

To mount the QFX3008-I Interconnect device in a rack using a mechanical lift (see Figure 156 on page 407 and Figure 157 on page 408):

1. Load the device onto the lift, making sure it rests securely on the lift platform.

2. Using the lift, position the device in front of the rack, centering it in front of the mounting shelves installed in the rack.

3. Lift the chassis approximately 0.75 in. (1.9 cm) above the surface of the mounting shelves. Position the chassis in the rack as close as possible to resting on the support that the mounting shelves provide.

4. In a four-post rack, carefully slide the device onto the mounting shelves until the front-mounting brackets (“ears”) attached to the chassis contact the rack rails. The handles on the side of the chassis can be used to help position the Interconnect device in the rack.

   In a two-post rack, carefully slide the device onto the mounting shelves until the center-mounting brackets (“ears”) attached to the chassis contact the rack rails. The handles on the side of the chassis can be used to help position the QFX3008-I Interconnect device in the rack.

 Copyright © 2018, Juniper Networks, Inc.

Figure 156: Installing a QFX3008-I Interconnect Device in a Four-Post Rack

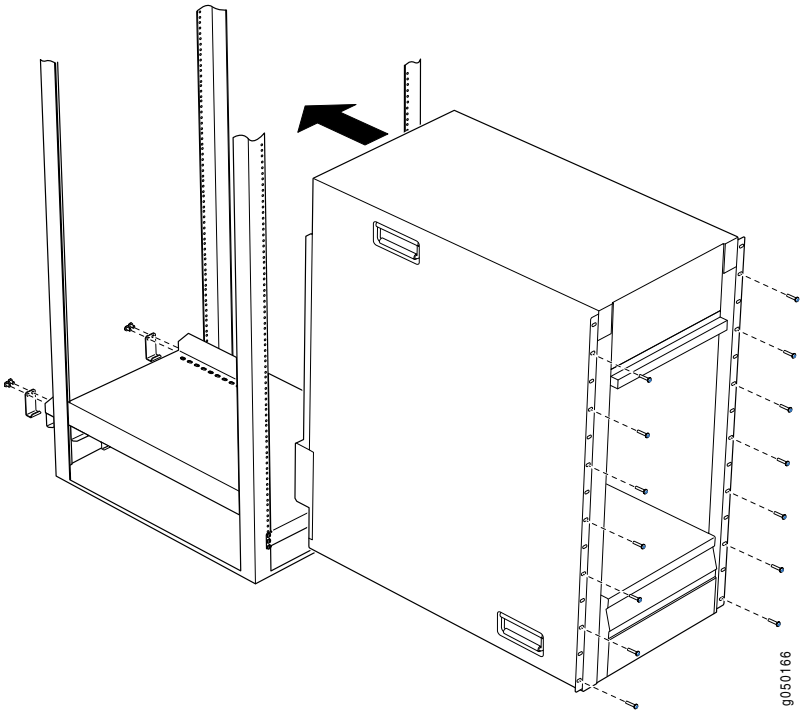

5. Move the lift away from the rack.

6. Ensure the mounting brackets are flush with the front of the rack.

7. Install a mounting screw into each of the open front-mounting holes aligned with the rack, starting from the bottom.

8. Visually inspect the alignment of the device. If the device is installed properly in the rack, all the mounting screws on one side of the rack are aligned with the mounting screws on the opposite side, and the device is level.

9. After ensuring that the device is aligned properly, tighten the screws.

10. In a four-post rack, hook the rear support anchors around the bottom rear flange of the mounting shelf so that its holes line up with the grounding lug screw holes at the bottom left and right corner of the chassis rear.

Copyright © 2018, Juniper Networks, Inc.

NOTE: Earlier versions of the four-post rack mounting hardware did not require the rear support anchors. If your four-post rack mounting hardware includes spacer bars and two shelves the rear support anchors are not required.

11. Secure the rear support anchors with the provided UNC 1/4-20 (right side) screws and M6 (left side) screws.

TIP: Because the rear support anchors are attached to the chassis grounding points, it is best to connect the chassis to earth ground while performing this step. See "Connecting Earth Ground to a QFX3008-I Interconnect Device" on page 409 for more information.

Figure 157: Attaching Rear Support Anchors to the QFX3008-I Chassis in a Four-Post Rack

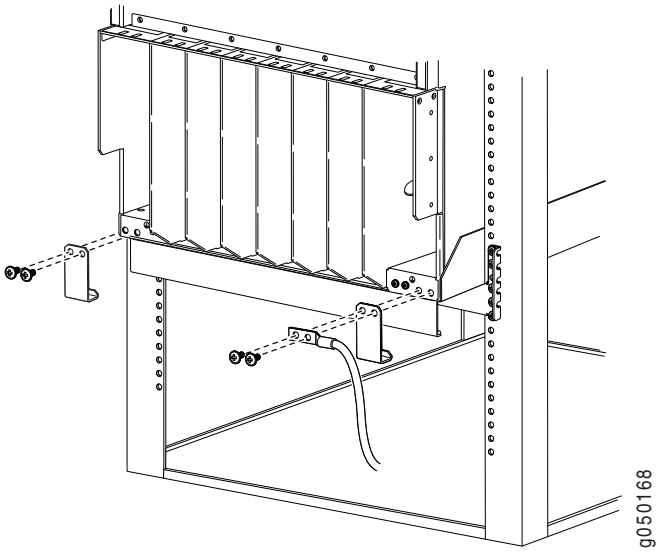

Related Documentation

- Connecting AC Power to a QFX3008-I Interconnect Device with Single-Phase Wiring Trays on page 411
- Powering On a QFX3008-I Interconnect Device on page 425
- Rack Requirements for a QFX3008-I Interconnect Device on page 231
- Cabinet Requirements for a QFX3008-I Interconnect Device on page 239

Copyright © 2018, Juniper Networks, Inc.

Connecting Earth Ground to a QFX3008-I Interconnect Device

To meet safety and electromagnetic interference (EMI) requirements and to ensure proper operation, we recommend that the QFX3008-I Interconnect device be adequately grounded before it is connected to power.

Two pairs of threaded inserts (PEM nuts) are provided on the QFX3008-I Interconnect device for connecting the device to earth ground. The first pair is sized for M6 screws and is located below the wiring tray on the bottom left corner at the rear of the chassis. The second pair is sized for UNC ¼-20 screws and is located below the second wiring tray on the bottom right corner at the rear of the chassis. The grounding points are spaced 0.625 in. (15.86 mm) apart. The grounding lug required is a Panduit LCD2-14A-Q or equivalent.

The accessory box shipped with the device includes a cable lug and two UNC ¼-20 screws with integrated washers. For power cord and grounding cable specifications, see "AC Power Cord Specifications for a QFX3008-I Interconnect Device with Single-Phase Wiring Trays" on page 283, "AC Power Cord Specifications for a QFX3008-I Interconnect Device with Three-Phase Delta Wiring Trays" on page 285, "AC Power Cord Specifications for a QFX3008-I Interconnect Device with Three-Phase Wye Wiring Trays" on page 286, and "Grounding Cable and Lug Specifications for a QFX3008-I Interconnect Device" on page 61.

Before you begin to connect the QFX3008-I Interconnect device to earth ground:

- Ensure that you understand how to prevent ESD damage. See "Prevention of Electrostatic Discharge Damage" on page 360.
- Ensure that a licensed electrician has attached the grounding lug to an appropriate grounding cable (see "Grounding Cable and Lug Specifications for a QFX3008-I Interconnect Device" on page 61).

CAUTION: **Using a grounding cable with an incorrectly attached lug can damage the device.**

Ensure you have the following tools and parts available to connect a QFX3008-I Interconnect device to earth ground:

- Electrostatic discharge (ESD) grounding strap
- Grounding cable (not provided) with attached lug
- Screws and split washers to secure the grounding lug to the protective earthing terminal (two UNC ¼-20 screws with integrated washers are provided)
- Phillips (+) torque screwdriver, number 2

CAUTION: **You must use an appropriate torque-controlled tool to tighten the screws on the grounding lug. Applying excessive torque damages the**

grounding lug or chassis. Ground lugs should be installed with SAE Grade 5 screws or better at no more than 72 in-lb (8 Nm).

To connect a QFX3008-I Interconnect device to earth ground (see Figure 158 on page 410):

1. Attach an electrostatic discharge (ESD) grounding strap to your bare wrist, and connect the strap to the approved ESD site grounding point.

2. Connect one end of the grounding cable to a proper earth ground, such as the rack in which the device is installed.

3. Detach the ESD grounding strap from the site ESD grounding point.

4. Attach an electrostatic discharge (ESD) grounding strap to your bare wrist, and connect the strap to the ESD point on the chassis.

5. In a four-post rack, place the grounding lug attached to the grounding cable over one of the rear support anchors, as shown in Figure 158 on page 410.

   In a two-post rack, place the grounding cable lug over the grounding points on the bottom rear of the chassis below the wiring trays.

   The left pair is sized for M6 screws, and the right pair is sized for UNC ¼-20 screws.

6. Using the torque screwdriver, secure the grounding lug to the protective earthing terminal.

Figure 158: Connecting a Grounding Cable to a QFX3008-I Interconnect Device

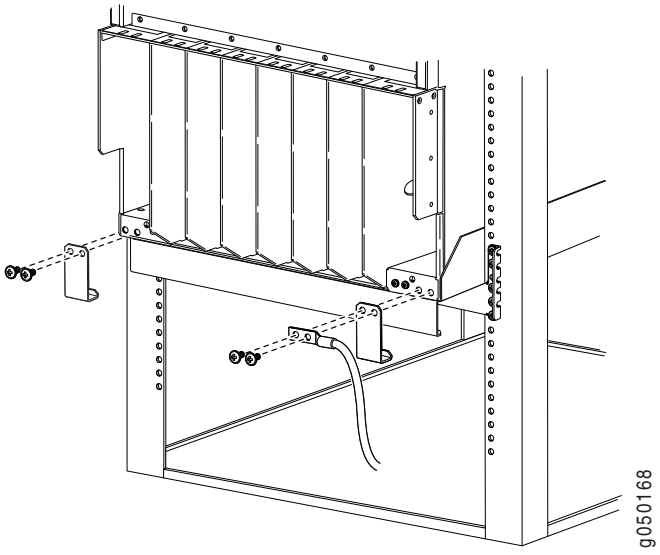

Copyright © 2018, Juniper Networks, Inc.

Related Documentation

- Site Preparation Checklist for a QFX3008-I Interconnect Device on page 210

Connecting AC Power to a QFX3008-I Interconnect Device with Single-Phase Wiring Trays

A QFX3008-I Interconnect device is configured with six AC power supplies and two wiring trays.

CAUTION: Mixing different types of wiring trays in the same chassis is not a supported configuration.

CAUTION: To meet safety and electromagnetic interference (EMI) requirements and to ensure proper operation, the QFX3008-I Interconnect device must be adequately grounded before it is connected to power.

For installations that require a separate grounding conductor to the chassis, use the protective earthing terminal on the QFX3008-I Interconnect device to connect to earth ground. For instructions on connecting a QFX3008-I Interconnect device to ground using a separate grounding conductor, see "Connecting Earth Ground to a QFX3008-I Interconnect Device" on page 409.

A QFX3008-I Interconnect device receives additional grounding when you plug the power supply in the device into a grounded AC power outlet by using the AC power cord appropriate for your geographical location. See "AC Power Cord Specifications for a QFX3008-I Interconnect Device with Single-Phase Wiring Trays" on page 283.

NOTE: Each wiring tray AC appliance inlet must be connected to a dedicated AC power source outlet.

Before you begin to connect power to the device:

- Ensure that you understand how to prevent ESD damage. See "Prevention of Electrostatic Discharge Damage" on page 360.
- Install power supplies in the device. See "Installing an AC Power Supply in a QFX3008-I Interconnect Device" on page 607.
- Install single-phase wiring trays in the device. See "Installing a Wiring Tray in a QFX3008-I Interconnect Device" on page 610.

Ensure that you have the following parts and tools available to connect power to the device:

- Electrostatic discharge (ESD) grounding strap

Copyright © 2018, Juniper Networks, Inc.

- Power cords appropriate for your geographical location. See "AC Power Cord Specifications for a QFX3008-I Interconnect Device with Single-Phase Wiring Trays" on page 283.

WARNING: **Ensure that the power cords do not block access to device components or drape where people can trip on them.**

To connect AC power to a QFX3008-I Interconnect device with single-phase wiring trays (see Figure 159 on page 412:

1. Attach the ESD grounding strap to your bare wrist, and connect the strap to the ESD point on the chassis.

2. Ensure that the wiring tray is fully inserted and latched securely in the chassis. See "Installing a Wiring Tray in a QFX3008-I Interconnect Device" on page 610.

3. Set the switch, which is near the top of the wiring tray faceplate, to the OFF (O) position.

4. Locate the power cord or cords shipped with the device; the cords have plugs appropriate for your geographical location.

5. Insert the coupler end of the power cord into the AC appliance inlet on the wiring tray faceplate. See Figure 159 on page 412.

Figure 159: Connecting an AC Power Cord to a Single-Phase Wiring Tray

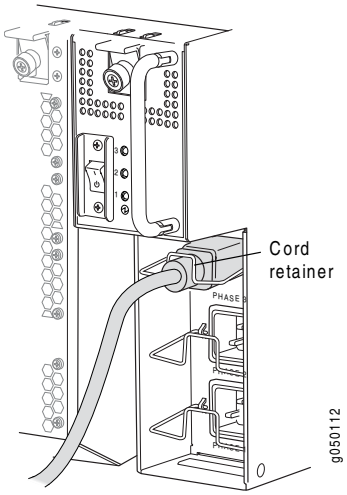

6. If the AC power source outlet has a power device, set it to the OFF (0) position.

7. Insert the power cord plug into an AC power source outlet.

Copyright © 2018, Juniper Networks, Inc.

8. Repeat Step 5 through Step 7 for each AC appliance inlet on the wiring tray faceplate.

9. If the AC power source outlet has a power device, set it to the ON (|) position.

10. Verify that each LED on the wiring tray faceplate is lit solid green. Verify that each LED on the power supply faceplate is lit solid green.

Related Documentation

- Powering On a QFX3008-I Interconnect Device on page 425
- Wiring Tray in a QFX3008-I Interconnect Device on page 58
- Wiring Tray LEDs on a QFX3008-I Interconnect Device on page 735

Preparing Delta and Wye Three-Phase Power Cords

A QFX3008-I Interconnect device can be configured with two three-phase wiring trays. Delta and wye wiring configurations are available. A licensed electrician must prepare the power cords that you provide for installation in the wiring tray. Several parts included with the wiring trays enable the power cords to be dressed in different positions. If you need the power cable to be routed up to the top of a rack, you must use the included 90° connector to enable the power cord to be routed upward (see Figure 160 on page 414). The 90° connector provides more flexibility to position the power cord outside the width of the chassis. Alternatively, if the power cords will be routed down to the bottom of the rack, or space limitations prevent you from extending the width of the chassis footprint, you can use the flat connector to install the power cord (see Figure 161 on page 414). Figure 162 on page 415 and Figure 163 on page 415 show the power cords installed on the wiring trays in the two different positions. Figure 164 on page 416 shows the wiring tray being installed in the chassis, using the flat connector.

Figure 160: Assembling a Power Cord Using a 90º Connector

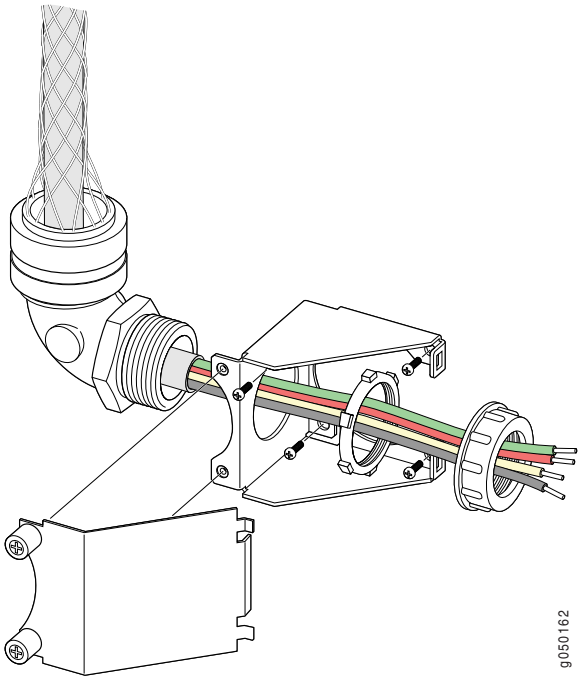

Figure 161: Assembling a Power Cord Using a Flat Connector

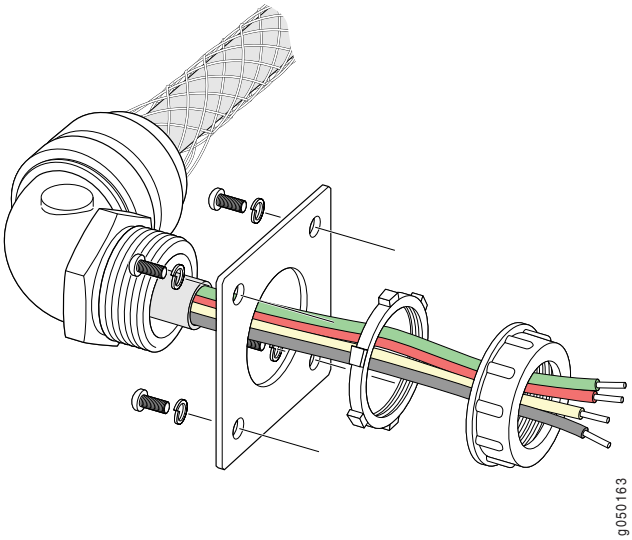

Copyright © 2018, Juniper Networks, Inc.

Figure 162: Wye Wiring Tray with a 90º Connector Installed

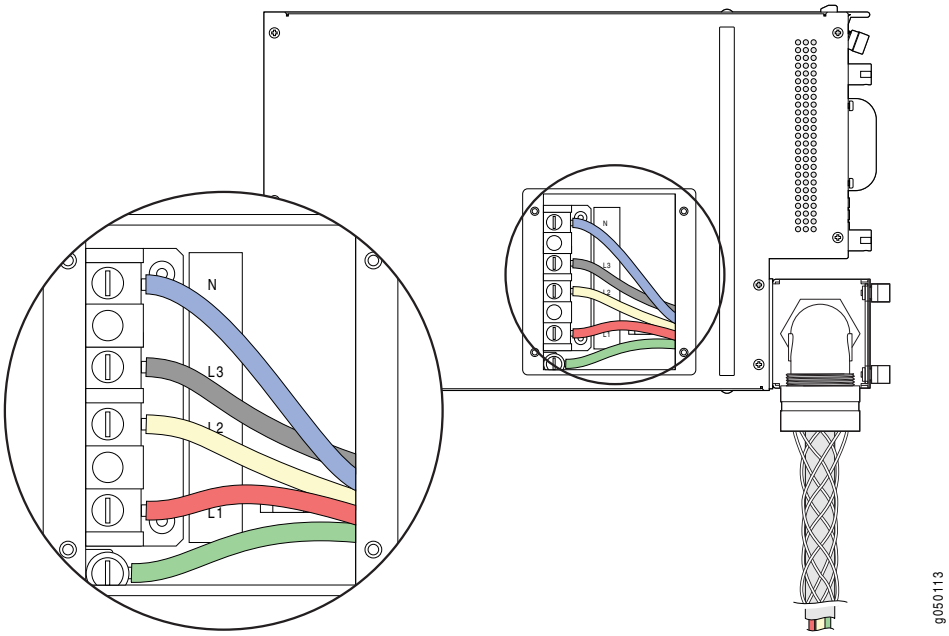

Figure 163: Delta Wiring Tray with a Flat Connector Installed

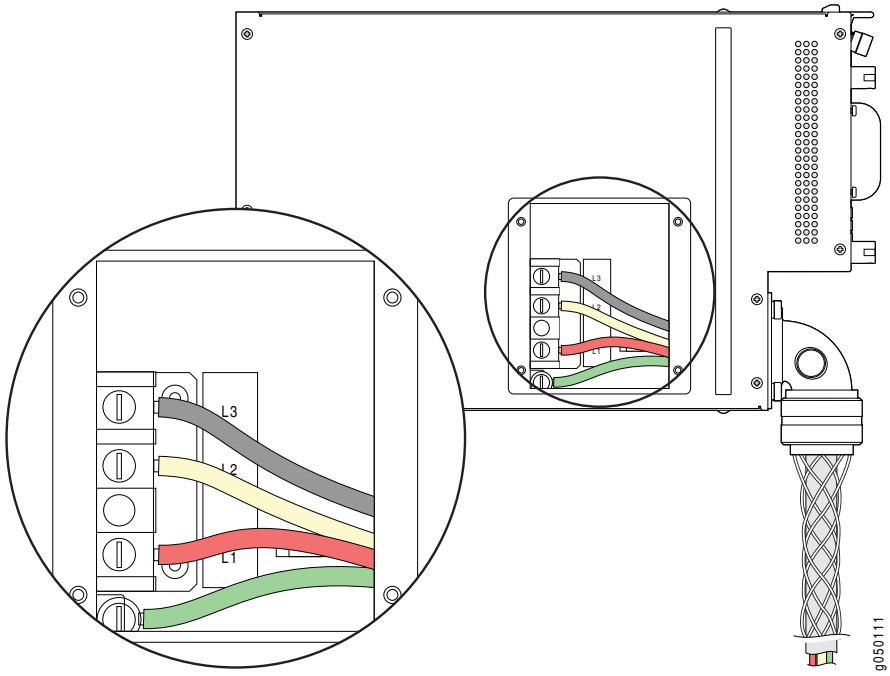

Figure 164: Installing a Three-Phase Wiring Tray with a Power Cord Installed

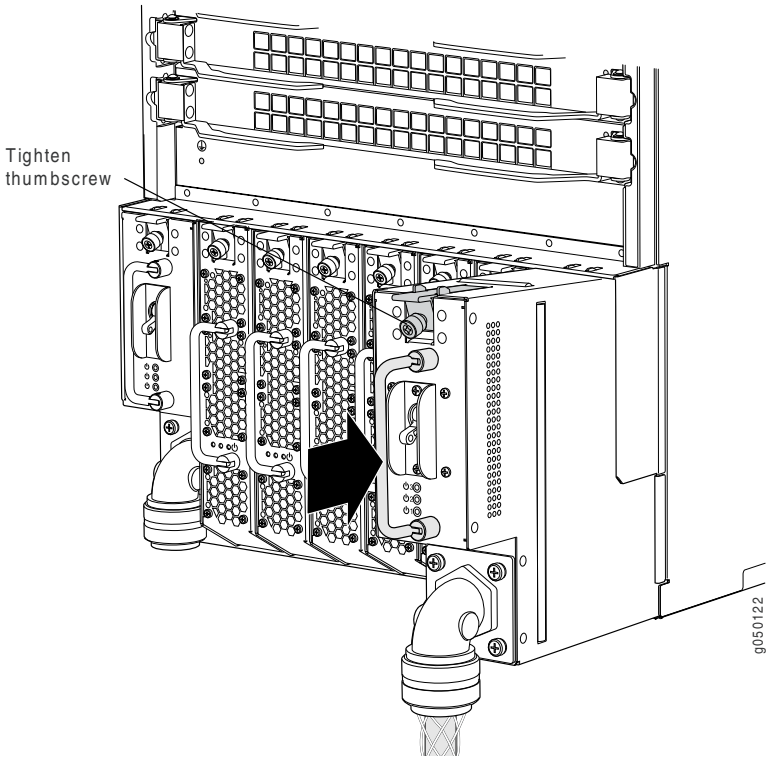

CAUTION: Mixing different types of wiring trays in the same chassis is not a supported configuration.

CAUTION: To meet safety and electromagnetic interference (EMI) requirements and to ensure proper operation, a QFX3008-I Interconnect device must be adequately grounded before it is connected to power.

For installations that require a separate grounding conductor to the chassis, use the protective earthing terminal on the QFX3008-I Interconnect device to connect to earth ground. For instructions on connecting a QFX3008-I Interconnect device to ground using a separate grounding conductor, see "Connecting Earth Ground to a QFX3008-I Interconnect Device" on page 409.

A QFX3008-I Interconnect device receives additional grounding when you plug the wiring tray in the device into a grounded AC power outlet by using the AC power cord appropriate for your geographical location. See "AC Power Cord Specifications for a QFX3008-I Interconnect Device with Three-Phase Delta Wiring Trays" on page 285 or "AC Power Cord Specifications for a QFX3008-I Interconnect Device with Three-Phase Wye Wiring Trays" on page 286.

Copyright © 2018, Juniper Networks, Inc.

NOTE: **Each wiring tray must be connected to a dedicated AC power source outlet.**

Before you begin to prepare the wiring trays for installation:

- Ensure that you understand how to prevent ESD damage. See "Prevention of Electrostatic Discharge Damage" on page 360.

Ensure that you have the following parts and tools available to prepare the wiring trays for installation:

- Electrostatic discharge (ESD) grounding strap
- Phillips (+) screwdriver, number 2
- Power cords appropriate for your wiring trays and geographical location. See "AC Power Cord Specifications for a QFX3008-I Interconnect Device with Three-Phase Delta Wiring Trays" on page 285 or "AC Power Cord Specifications for a QFX3008-I Interconnect Device with Three-Phase Wye Wiring Trays" on page 286.

WARNING: **Ensure that the power cords do not block access to device components or drape where people can trip on them.**

To prepare three-phase power cords for installation:

1. Attach the ESD grounding strap to your bare wrist, and connect the strap to the ESD point on the chassis.

2. Ensure that the power cords are not connected to power outlets. Switch off the customer site circuit breakers. Ensure that the voltage across the AC power source is 0 V and that there is no chance that the voltage might become active during installation.

3. Remove a wiring tray from the chassis. See "Removing a Wiring Tray from a QFX3008-I Interconnect Device" on page 608.

4. Flip the breaker on the wiring tray faceplate to the OFF (O) position.

5. Using a number 2 Phillips (+) screwdriver, loosen and remove the screws and washers that hold the square flat connector to the wiring tray. Keep the screws and washers.

6. Depending on how you want to dress the power cords, decide whether to use the 90° connector to attach the power cord to the wiring tray or the square flat connector that you removed in Step 5.

Copyright © 2018, Juniper Networks, Inc.

7. Insert the power cord in the wire strain relief by compressing the wire strain relief to enlarge the opening. Pull enough cord through the strain relief to allow easy wiring connections to the terminal block.

8. Remove first the plastic, then the metal retaining nuts from the wire strain relief, and place either the 90º connector or flat connector over the threaded portion of the wire strain relief as shown in Figure 160 on page 414 or Figure 161 on page 414.

9. Screw first the metal, then the plastic retaining nuts on the threaded portion of the wire strain relief to complete the assembly.

10. Route the wiring through the hole in the wiring tray, and using a number 2 Phillips (+) screwdriver, attach the connector to the wiring tray using the screws and washers you removed in Step 5.

    TIP: If you are ready to make the wiring connections to the terminal block, see "Connecting AC Power to a QFX3008-I Interconnect Device with Three-Phase Delta Wiring Trays" on page 418 or "Connecting AC Power to a QFX3008-I Interconnect Device with Three-Phase Wye Wiring Trays" on page 422.

11. Repeat Step 3 through Step 10 for the other wiring tray.

Related Documentation

- Powering On a QFX3008-I Interconnect Device on page 425
- Wiring Tray in a QFX3008-I Interconnect Device on page 58
- Wiring Tray LEDs on a QFX3008-I Interconnect Device on page 735

Connecting AC Power to a QFX3008-I Interconnect Device with Three-Phase Delta Wiring Trays

A QFX3008-I Interconnect device is configured with six AC power supplies and two wiring trays.

CAUTION: Mixing different types of wiring trays in the same chassis is not a supported configuration.

CAUTION: To meet safety and electromagnetic interference (EMI) requirements and to ensure proper operation, the QFX3008-I Interconnect device must be adequately grounded before it is connected to power.

Copyright © 2018, Juniper Networks, Inc.

For installations that require a separate grounding conductor to the chassis, use the protective earthing terminal on the QFX3008-I Interconnect device to connect to earth ground. For instructions on connecting a QFX3008-I Interconnect device to ground using a separate grounding conductor, see "Connecting Earth Ground to a QFX3008-I Interconnect Device" on page 409.

A QFX3008-I Interconnect device receives additional grounding when you plug the power supply in the device into a grounded AC power outlet by using the AC power cord appropriate for your geographical location. See "AC Power Cord Specifications for a QFX3008-I Interconnect Device with Three-Phase Delta Wiring Trays" on page 285.

NOTE: Each wiring tray must be connected to a dedicated AC power source outlet.

Before you begin to connect power to the device:

- Ensure that you understand how to prevent ESD damage. See "Prevention of Electrostatic Discharge Damage" on page 360.
- Ensure that a licensed electrician has prepared the power cords. See "Preparing Delta and Wye Three-Phase Power Cords" on page 413.

Ensure that you have the following parts and tools available to connect power to the device:

- Electrostatic discharge (ESD) grounding strap
- Phillips (+) screwdriver, number 1
- Slotted (–) screwdriver, 1/4 inch, with a torque range between 23 in-lb (2.6 Nm) and 25 in-lb (2.8 Nm)

CAUTION: You must use an appropriate torque-controlled tool to tighten the screws on the terminal block. Applying excessive torque damages the terminal block and the wiring tray. The absolute maximum torque that may be applied to this screw is 50 in-lb (5.6 Nm).

WARNING: Ensure that the power cords do not block access to device components or drape where people can trip on them.

To connect AC power to three-phase delta wiring trays:

1. Attach the ESD grounding strap to your bare wrist, and connect the strap to the ESD point on the chassis.

2. Ensure that the power cords are not connected to power outlets. Switch off the customer site circuit breakers. Ensure that the voltage across the AC power source is 0 V and that there is no chance that the voltage might become active during installation.

3. If the wiring tray is installed in the chassis, remove it. See "Removing a Wiring Tray from a QFX3008-I Interconnect Device" on page 608. The power cord must be attached to the wiring tray as described in "Preparing Delta and Wye Three-Phase Power Cords" on page 413.

4. Ensure that the power switch on the wiring tray faceplate is in the OFF (O) position.

5. Using a number 1 Phillips (+) screwdriver, loosen the four screws on the metal AC wiring compartment on the side of the wiring tray (see Figure 165 on page 421).

6. Open the metal door of the wiring tray compartment.

Copyright © 2018, Juniper Networks, Inc.

7. Connect the wires to the AC terminal block on the three-phase delta wiring tray (Figure 165 on page 421). Use a 1/4-in. slotted screwdriver to loosen the input terminal or grounding point screw, insert each wire into the grounding point or input terminal, and tighten the screw to between 23 in-lb (2.6 Nm) and 25 in-lb (2.8 Nm).

   CAUTION: **You must use an appropriate torque-controlled tool to tighten the screws on the terminal block. Applying excessive torque damages the terminal block and the wiring tray. The absolute maximum torque that may be applied to this screw is 50 in-lb (5.6 Nm).**

   a. Insert the wire labeled **GND** into the grounding point labeled **GND**.

   b. Insert the wire labeled **L1** into the **L1** input terminal.

   c. Insert the wire labeled **L2** into the **L2** input terminal.

   d. Insert the wire labeled **L3** into the **L3** input terminal.

Figure 165: Connecting Power to a Three-Phase Delta AC Power Supply

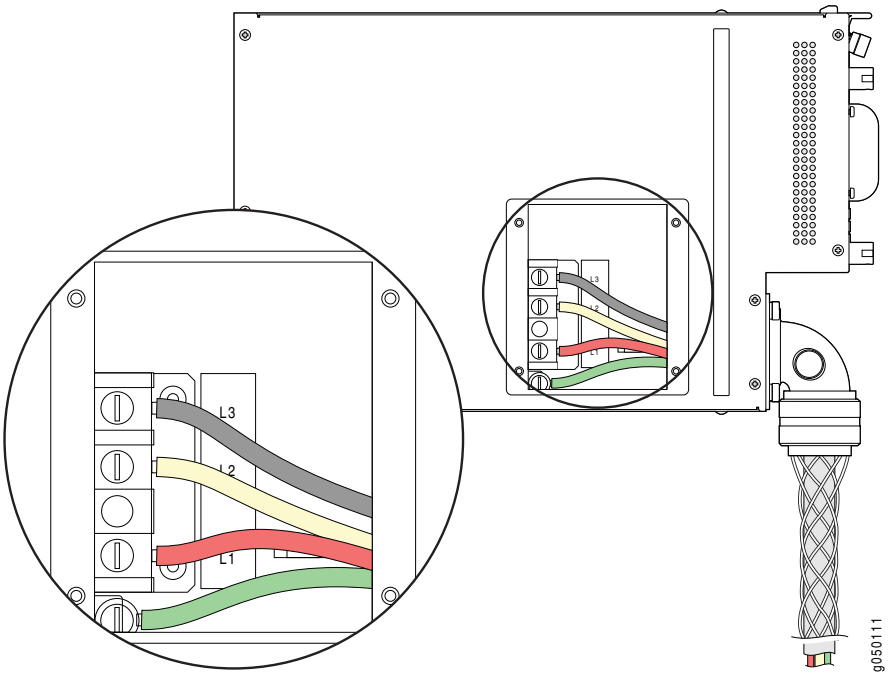

NOTE: **The color of each AC power wire might vary.**

8. Verify that the power cable connections are correct.

9. Replace the cover on the wiring compartment, and using a number 1 Phillips (+) screwdriver, tighten the four screws.

10. Repeat Step 3 through Step 9 for the other wiring tray.

Related Documentation

- Powering On a QFX3008-I Interconnect Device on page 425
- Wiring Tray in a QFX3008-I Interconnect Device on page 58
- Wiring Tray LEDs on a QFX3008-I Interconnect Device on page 735

Connecting AC Power to a QFX3008-I Interconnect Device with Three-Phase Wye Wiring Trays

A QFX3008-I Interconnect device is configured with six AC power supplies and two wiring trays.

CAUTION: Mixing different types of wiring trays in the same chassis is not a supported configuration.

CAUTION: To meet safety and electromagnetic interference (EMI) requirements and to ensure proper operation, the QFX3008-I Interconnect device must be adequately grounded before it is connected to power.

For installations that require a separate grounding conductor to the chassis, use the protective earthing terminal on the QFX3008-I Interconnect device to connect to earth ground. For instructions on connecting a QFX3008-I Interconnect device to ground using a separate grounding conductor, see "Connecting Earth Ground to a QFX3008-I Interconnect Device" on page 409.

A QFX3008-I Interconnect device receives additional grounding when you plug the power supply in the device into a grounded AC power outlet by using the AC power cord appropriate for your geographical location. See "AC Power Cord Specifications for a QFX3008-I Interconnect Device with Three-Phase Wye Wiring Trays" on page 286.

NOTE: Each wiring tray must be connected to a dedicated AC power source outlet.

Before you begin to connect power to the device:

- Ensure that you understand how to prevent ESD damage. See "Prevention of Electrostatic Discharge Damage" on page 360.

Copyright © 2018, Juniper Networks, Inc.

- Ensure that a licensed electrician has prepared the power cords. See "Preparing Delta and Wye Three-Phase Power Cords" on page 413.

Ensure that you have the following parts and tools available to connect power to the device:

- Electrostatic discharge (ESD) grounding strap
- Phillips (+) screwdriver, number 1
- Slotted (–) screwdriver, 1/4 inch, with a torque range between 23 in-lb (2.6 Nm) and 25 in-lb (2.8 Nm)

CAUTION: **You must use an appropriate torque-controlled tool to tighten the screws on the terminal block. Applying excessive torque damages the terminal block and the wiring tray. The absolute maximum torque that may be applied to this screw is 50 in-lb (5.6 Nm).**

WARNING: **Ensure that the power cords do not block access to device components or drape where people can trip on them.**

To connect AC power to three-phase wye wiring trays:

1. Attach the ESD grounding strap to your bare wrist, and connect the strap to the ESD point on the chassis.

2. Ensure that the power cords are not connected to power outlets. Switch off the customer site circuit breakers. Ensure that the voltage across the AC power source is 0 V and that there is no chance that the voltage might become active during installation.

3. If the wiring tray is installed in the chassis, remove it. See "Removing a Wiring Tray from a QFX3008-I Interconnect Device" on page 608. The power cord must be attached to the wiring tray as described in "Preparing Delta and Wye Three-Phase Power Cords" on page 413.

4. Ensure that the power switch on the wiring tray faceplate is in the OFF (O) position.

5. Using a number 1 Phillips (+) screwdriver, loosen the four screws on the metal AC wiring compartment on the side of the wiring tray (see Figure 166 on page 424).

6. Open the metal door of the wiring tray compartment.

7. Connect the wires to the AC terminal block on the three-phase wye wiring tray (Figure 166 on page 424). Use a 1/4-in. slotted screwdriver to loosen the input terminal or grounding point screw, insert each wire into the grounding point or input terminal, and tighten the screw to between 23 in-lb (2.6 Nm) and 25 in-lb (2.8 Nm).

   CAUTION: **You must use an appropriate torque-controlled tool to tighten the screws on the terminal block. Applying excessive torque damages the terminal block and the wiring tray. The absolute maximum torque that may be applied to this screw is 50 in-lb (5.6 Nm).**

   a. Insert the wire labeled **GND** into the grounding point labeled **GND**.

   b. Insert the wire labeled **L1** into the **L1** input terminal.

   c. Insert the wire labeled **L2** into the **L2** input terminal.

   d. Insert the wire labeled **L3** into the **L3** input terminal.

   e. Insert the wire labeled **N** into the **N** input terminal

Figure 166: Connecting Power to the Three-Phase Wye Wiring Tray

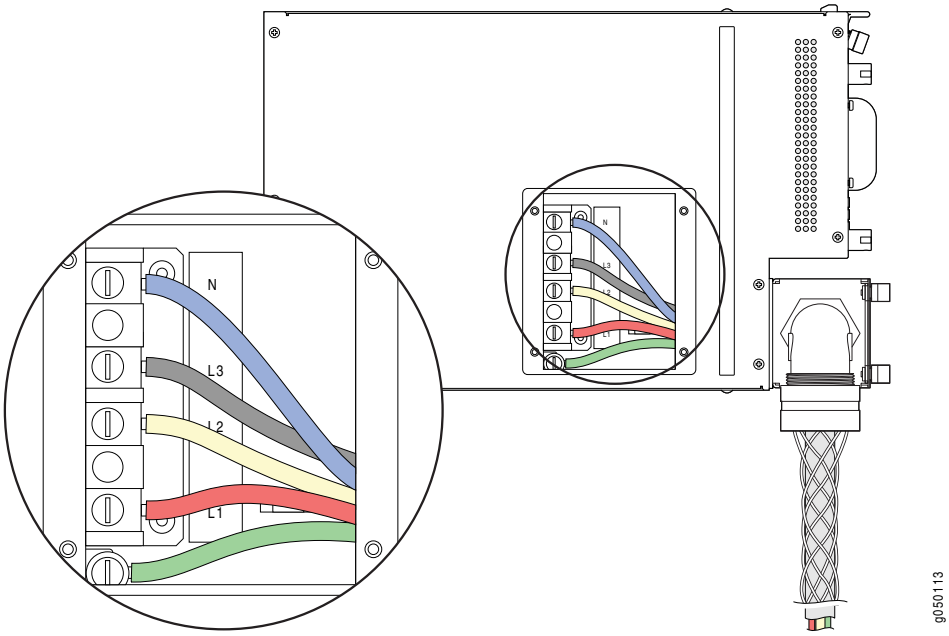

NOTE: **The color of each AC power wire might vary.**

Copyright © 2018, Juniper Networks, Inc.

8. Verify that the power cable connections are correct.

9. Replace the cover on the wiring compartment, and using a number 1 Phillips (+) screwdriver, tighten the four screws.

10. Repeat Step 3 through Step 9 for the other wiring tray.

Related Documentation

- Powering On a QFX3008-I Interconnect Device on page 425
- Wiring Tray in a QFX3008-I Interconnect Device on page 58
- Wiring Tray LEDs on a QFX3008-I Interconnect Device on page 735

Powering On a QFX3008-I Interconnect Device

Before you power on the QFX3008-I Interconnect device, ensure that:

- You understand how to protect the device from electrostatic damage. See "Prevention of Electrostatic Discharge Damage" on page 360.
- You have connected the QFX3008-I Interconnect device to the QFabric system control plane and management network. See "QFX3000-G QFabric System Installation Overview" on page 373.

Ensure that you have the following parts and tools available to power on the device:

- An electrostatic discharge (ESD) grounding strap.

To power on the device:

1. Attach the ESD grounding strap to your bare wrist and connect the strap to the ESD point on the chassis.

2. Ensure that the power supplies are fully inserted in the chassis.

3. Ensure that the source power cords are installed correctly for each wiring tray, and the wiring trays are fully inserted in the chassis.

4. Switch on the site circuit breakers.

5. Set a wiring tray's switch to the ON (|) position. Observe the power supply and wiring tray faceplate LEDs. If the wiring trays are installed correctly and functioning normally, the LEDs light green and remain constantly lit.

6. Repeat Step 5 for the second wiring tray installed in the device.

Related Documentation

- Installing an AC Power Supply in a QFX3008-I Interconnect Device on page 607
- Connecting AC Power to a QFX3008-I Interconnect Device with Single-Phase Wiring Trays on page 411
- Connecting AC Power to a QFX3008-I Interconnect Device with Three-Phase Delta Wiring Trays on page 418
- Connecting AC Power to a QFX3008-I Interconnect Device with Three-Phase Wye Wiring Trays on page 422
- Powering Off a QFX3008-I Interconnect Device on page 562

Connecting a QFX Series Device to a Management Console

The QFX Series has a console port with an RJ-45 connector. Use the console port to connect the device to a management console or to a console server.

Ensure that you have an RJ-45 to DB-9 rollover cable available. An RJ-45 cable with an RJ-45 to DB-9 adapter is provided with the device.

NOTE: **If your laptop or PC does not have a DB-9 male connector pin and you want to connect your laptop or PC directly to the QFX Series, use a combination of the RJ-45 cable and RJ-45 to DB-9 adapter supplied with the device and a USB to DB-9 male adapter. You must provide the USB to DB-9 male adapter.**

To connect the QFX Series to a management console (see Figure 151 on page 387 and Figure 152 on page 387):

1. Connect one end of the Ethernet cable to the console port (labeled **CON**).
2. Connect the other end of the Ethernet cable into the console server (see Figure 151 on page 387) or management console (see Figure 152 on page 387).

Figure 167: Connecting the QFX Series to a Management Console Through a Console Server

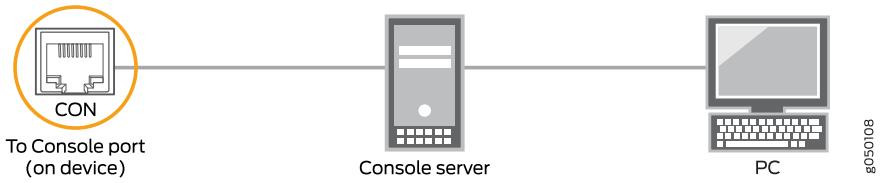

Copyright © 2018, Juniper Networks, Inc.

Figure 168: Connecting the QFX Series Directly to a Management Console

Related Documentation

- *Console Port Connector Pinouts for the QFX Series*
- *Configuring Console and Auxiliary Port Properties*

Copyright © 2018, Juniper Networks, Inc.

CHAPTER 30

Installing QFX3008-I Optional Components

- Installing the Cable Management System on a QFX3008-I Interconnect Device on page 429
- Installing the Lockable Front Doors on a QFX3008-I Interconnect Device on page 430

Installing the Cable Management System on a QFX3008-I Interconnect Device

The cable management system is located at the top front of the chassis, above the card cage. The cable management system is an optional field-replaceable unit (FRU), it is not required that you install it.

Before you begin, ensure that you have the following parts and tools available to install the cable management system on a QFX3008-I Interconnect device:

- Electrostatic discharge (ESD) grounding strap
- Phillips (+) screwdriver, number 1
- Eight mounting screws, size 6-32 x 3/8" (included with the cable management system)

To install the cable management system on a QFX3008-I Interconnect device (see Figure 169 on page 430):

1. Attach the ESD grounding strap to your bare wrist, and connect the strap to the ESD point on the chassis.

2. Place the cable management system on the chassis, aligning the holes on its faceplate with the mounting holes on the chassis.

3. Install each of the mounting screws, tightening them by turning them clockwise using the Phillips (+) screwdriver, number 1.

Copyright © 2018, Juniper Networks, Inc.

Figure 169: Installing the Cable Management System on a QFX3008-I Interconnect Device

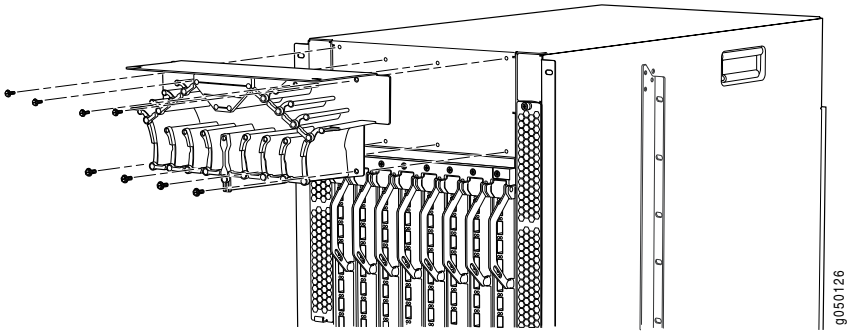

Installing the Lockable Front Doors on a QFX3008-I Interconnect Device

The lockable front doors cover the front card cage. A captive thumbscrew at the base where the doors meet secures the doors in a closed position. You can also lock these doors in the closed position to prevent cables, transceivers, or front cards from being removed. You must provide the lock. The lockable front doors are an optional field-replaceable unit (FRU), it is not required that you install them.

Before you begin, ensure that you have the following parts and tools available to install the lockable front doors on a QFX3008-I Interconnect device:

- Electrostatic discharge (ESD) grounding strap
- Phillips (+) screwdriver, number 1
- Eight mounting screws—These screws are already installed on the chassis, in each corner of the top and bottom front card cage ejector lever receptacle bars.

To install the lockable front doors on a QFX3008-I Interconnect device (see Figure 170 on page 431):

1. Attach the ESD grounding strap to your bare wrist, and connect the strap to the ESD point on the chassis.

2. Remove the two screws at each corner of the top and bottom front card cage ejector lever receptacle bars. The screws are located in the inset portion of the bar.

3. Place one of the doors on the chassis, aligning the holes on its faceplate with the mounting holes on the chassis.

4. Install the four mounting screws, tightening them by turning them clockwise using the Phillips (+) screwdriver, number 1.

5. Repeat Step 2 through Step 4 for the other door.

 Copyright © 2018, Juniper Networks, Inc.

NOTE: The doors must be in the open position to remove or install the bottom fan tray and front panel display.

Figure 170: Installing the Lockable Front Doors on a QFX3008-I Interconnect Device

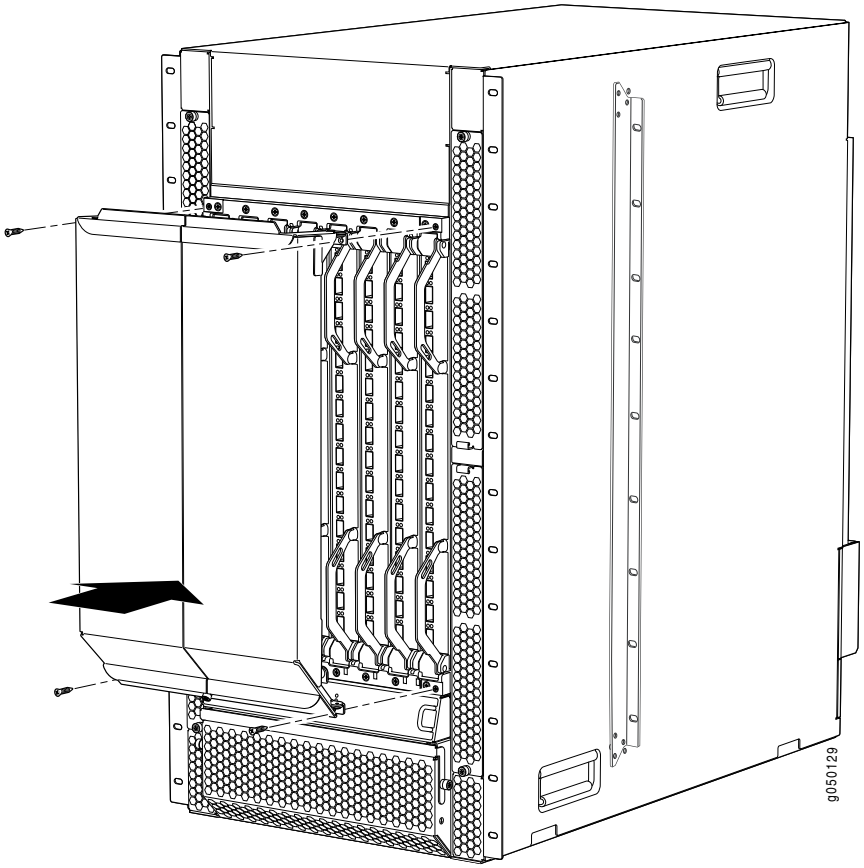

Copyright © 2018, Juniper Networks, Inc.

CHAPTER 31

Installing a QFX5100 Node Device

- Installing and Connecting a QFX5100 Device on page 433
- Unpacking a QFX5100 Device on page 434
- Mounting a QFX5100 Device in a Rack or Cabinet on page 435
- Connecting Earth Ground to a QFX5100 Device on page 442
- Connecting AC Power to a QFX5100 Device on page 443
- Connecting DC Power to a QFX5100 Device on page 446
- Connecting a QFX Series Device to a Management Console on page 450

Installing and Connecting a QFX5100 Device

You can mount a QFX5100 device:

- Flush with the front of a 19-in. four-post rack. Use the standard mounting brackets provided with the switch for this configuration.
- Recessed 2 in. (5 cm) from the front of a 19-in. four-post rack. Use the extension bracket provided in the standard mounting kit for this configuration. Recessed mounting is primarily used in enclosed cabinets.

To install and connect a QFX5100 device:

1. Follow the instructions in "Unpacking a QFX5100 Device" on page 434.

2. Determine how the device is to be mounted.

   Flush or recessed mounted in a rack or cabinet, see "Mounting a QFX5100 Device in a Rack or Cabinet" on page 435.

3. Follow the instructions in:

   a. Connecting Earth Ground to a QFX5100 Device on page 442

   b. "Connecting AC Power to a QFX5100 Device" on page 443 or Connecting DC Power to a QFX5100 Device on page 446

Copyright © 2018, Juniper Networks, Inc.

c. *Registering Products—Mandatory for Validating SLAs*

4. Depending on how you plan to use the QFX5100 device, do one of the following:
   - If you are using the QFX5100 device as a standalone switch, follow the instructions in *Configuring a QFX5100 Device*.
   - If you are using the QFX5100 device as a Node device in a QFX3000-G QFabric system, see "QFX3000-G QFabric System Installation Overview" on page 373 for information about the steps to install and configure your QFX3000-G QFabric system.
   - If you are using the QFX5100 device as a Node device in a QFX3000-M QFabric system, see *QFX3000-M QFabric System Installation Overview* for information about the steps to install and configure your QFX3000-M QFabric system.
   - If you are using a QFX5100-24Q as an Interconnect device in a QFX3000-M QFabric system, see *Connecting a QFX5100 Node Device to a QFX5100-24Q Interconnect Device*.
   - If you are using the QFX5100 device in a Virtual Chassis Fabric, see *Connecting a QFX5100 Device in a Virtual Chassis Fabric*.

Related Documentation

- Rack Requirements for a QFX5100 Device on page 232
- Cabinet Requirements for a QFX5100 Device on page 240
- Clearance Requirements for Airflow and Hardware Maintenance for a QFX5100 Device on page 248

Unpacking a QFX5100 Device

The QFX5100 switch chassis is a rigid sheet-metal structure that houses the hardware components. A QFX5100 device is shipped in a cardboard carton, secured with foam packing material. The carton also contains an accessory box and quick start instructions.

CAUTION: **QFX5100 devices are maximally protected inside the shipping carton. Do not unpack the switch until you are ready to begin installation.**

To unpack a QFX5100 device:

1. Move the shipping carton to a staging area as close to the installation site as possible, but where you have enough room to remove the system components.

2. Position the carton so that the arrows are pointing up.

3. Open the top flaps on the shipping carton.

Copyright © 2018, Juniper Networks, Inc.

4. Remove the accessory box and verify the contents against the inventory included in the box. Table 138 on page 435 lists the inventory of components supplied with a QFX5100 device.

5. Pull out the packing material holding the switch in place.

6. Verify the chassis components received:
   - Two power supplies
   - Fan modules
     - Five fan modules for 1 U devices
     - Three fan modules for 2 U devices

   NOTE: **Product SKU QFX5100-24Q: If you ordered the optional high-speed uplink modules, they are packaged as components and must be installed in the switch**

7. Save the shipping carton and packing materials in case you need to move or ship the switch later.

Table 138: Inventory of Components Supplied with a QFX5100 Device

Component	Quantity
Chassis with five fan modules and two power supplies. The QFX5100-96S has three fan modules.	1
Rear mounting blades	2
Front mounting brackets	2
Extension brackets	2
RJ-45 cable and RJ-45 to DB-9 adapter	1
Power cords (AC systems only)	2

Related Documentation

- Mounting a QFX5100 Device in a Rack or Cabinet on page 435
- Installing and Connecting a QFX5100 Device on page 433

Mounting a QFX5100 Device in a Rack or Cabinet

You can mount all QFX5100 switches on a four post 19-in. rack or cabinet using the mounting kit provided with the device.

For four post rack or cabinet installations, the mounting kit contains two front mounting rails with two matching rear mounting blades. This configuration allows either end of the switch to be mounted flush with the rack and still be adjustable for racks with different depths.

The mounting kit for the QFX5100-96S has mounting rails, blades, and brackets for the four-post configuration.

(The remainder of this topic uses “rack” to mean “rack or cabinet.”) The front and rear rack rails must be spaced between 28 in. (71.1 cm) and 36 in. (91.4 cm) front to back.

- Before You Begin Rack Installation on page 436
- Four-Post Procedure on page 437
- Two -Post Procedure on page 440

Before You Begin Rack Installation

Before you begin mounting a QFX5100 switch in the rack or cabinet:

1. Ensure that you understand how to prevent electrostatic discharge (ESD) damage. See “Prevention of Electrostatic Discharge Damage” on page 360.

2. Verify that the site meets the requirements described in “Site Preparation Checklist for a QFX5100 Device” on page 211.

3. Place the rack in its permanent location, allowing adequate clearance for airflow and maintenance, and secure it to the building structure.

4. Read “General Site Guidelines” on page 217, with particular attention to “Chassis Lifting Guidelines for a QFX5100 Device” on page 339.

5. Remove the switch from the shipping carton (see “Unpacking a QFX5100 Device” on page 434).

6. Ensure that you have the following parts and tools available to mount the switch in a rack:
   - ESD grounding strap (not provided).
   - Blades, rails, or brackets (provided).
     - For four-post installations:
       - One pair of rear mounting blades. These mounting blades support the rear of the chassis and must be installed (provided).
       - One pair of front mounting rails. The mounting blades slide into the mounting rails to support the switch (provided).
       - Screws to secure the mounting rails to the chassis (provided).
         - Twelve screws for 1 U chassis

Copyright © 2018, Juniper Networks, Inc.

    - Twenty-four screws for QFX5100-96S
  - Eight screws to secure the chassis and rear installation blades to the rack (not provided).
- For two-post installations (QFX5100-96S only):
  - One QFX5100-96S 2-post rack mount kit (separately orderable).
  - Sixteen screens for attaching the brackets to the chassis (provided).
  - Eight screws to secure the mounting brackets and chassis to the post (not provided).

- Appropriate screwdriver for the mounting screws (not provided).
- Two power cords with plugs appropriate to your geographical location (provided).
- RJ-45 cable and RJ-45 to DB-9 serial port adapter (provided).
- Management host, such as a PC laptop, with a serial port (not provided).

Optional equipment: Grounding cable kit with bracket, lug, and three nuts with integrated washers.

WARNING: **The 1 U versions of QFX5100 switches must be supported at all four corners. Mounting the chassis using only the front brackets will damage the chassis and can result in serious bodily injury.**

CAUTION: **All QFX5100 switches require two people for installation, one person to lift the switch into place and another person to attach the switch to the rack. If you are installing the QFX5100 switch above 60 in. (152.4 cm) from the floor, you can remove the power supplies and fan modules to minimize the weight before attempting to install the switch.**

CAUTION: **If you are mounting multiple switches on a rack, mount the switch in the lowest position of the rack first. Proceed to mount the rest of the switches from the bottom to the top of the rack to minimize the risk of the rack toppling.**

Four-Post Procedure

To mount the switch on four posts in a rack using the provided mounting kit:

1. Attach the ESD grounding strap to your bare wrist and to a site ESD point.

2. Decide whether the Field Replaceable Unit (FRU) end of the switch or the port end is to be placed at the front of the rack. Position the switch in such a manner that the **AIR**

IN labels on components are next to the cold aisle and **AIR OUT** labels on components are next to the hot aisle.

3. Align the holes in the mounting rail with the holes on the side of the chassis. See Figure 171 on page 438 through Figure 173 on page 438 for examples the proper alignment of 1 U and 2 U chassis systems.

Figure 171: Attaching Mounting Rails to the QFX5100-24Q

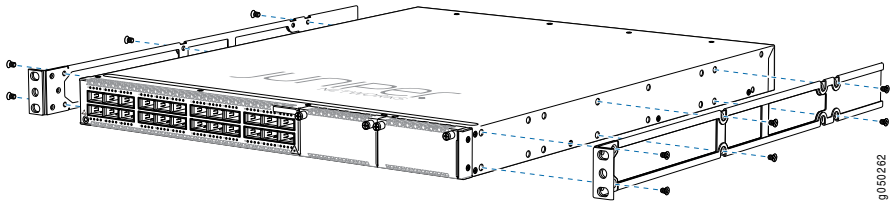

Figure 172: Attaching Mounting Rails to the QFX5100-48S

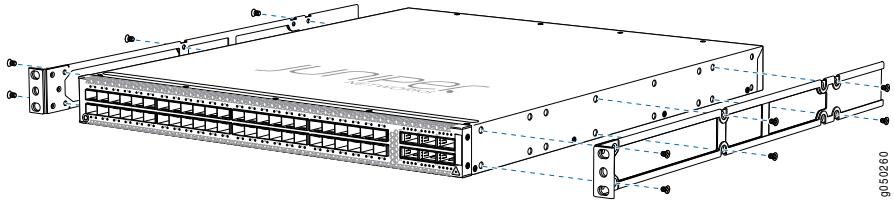

Figure 173: Attaching Mounting Rails to the QFX5100-96S

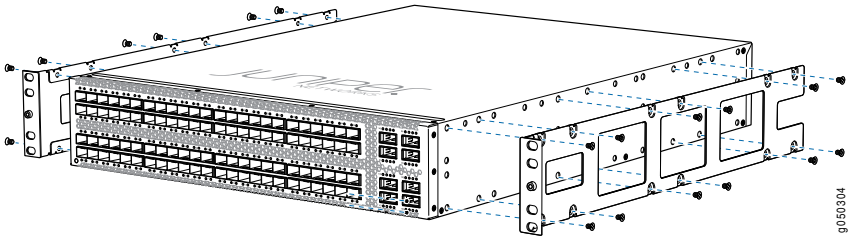

4. Attach the mounting rail to the switch using the mounting screws (and cage nuts and washers if your rack requires them). Tighten the screws.

5. Repeats steps 4 and 5 on the opposite side of the switch.

6. Have one person grasp both sides of the switch, lift it, and position it in the rack so that the front bracket is aligned with the rack holes.

7. Have a second person secure the front of the switch to the rack using four mounting screws (and cage nuts and washers if your rack requires them.) Tighten the screws. See Figure 174 on page 439 and Figure 175 on page 439 for examples of connecting the mounting rails and blades.

 Copyright © 2018, Juniper Networks, Inc.

Figure 174: Attach 1 U Switch to Rack

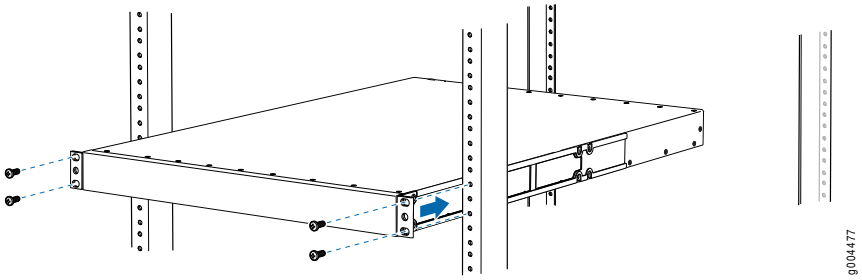

Figure 175: Slide Mounting Rail onto the QFX5100-96S Rear Mounting Blade

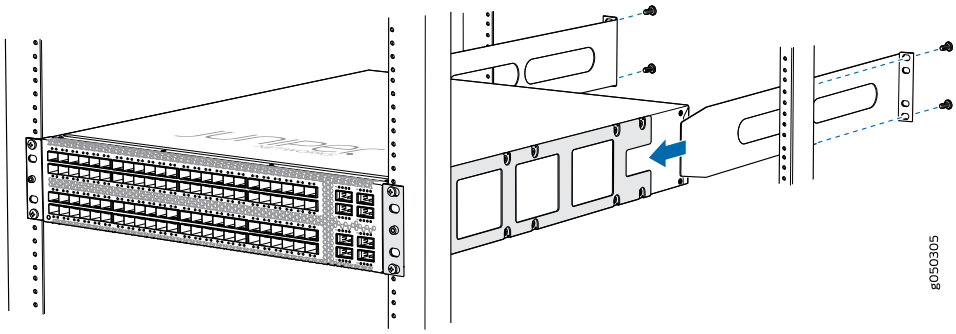

8. Continue to support the switch while sliding the rear mounting-blades into the channel of the side mounting-rails and securing the blades to the rack. Use the four mounting screws (and cage nuts and washers if your rack requires them) to attach each blade to the rack. (Use eight front-mounting screws for the QFX5100-96S.) Tighten the screws. See Figure 176 on page 439.

Figure 176: Slide Mounting Blade into 1 U Mounting Rail

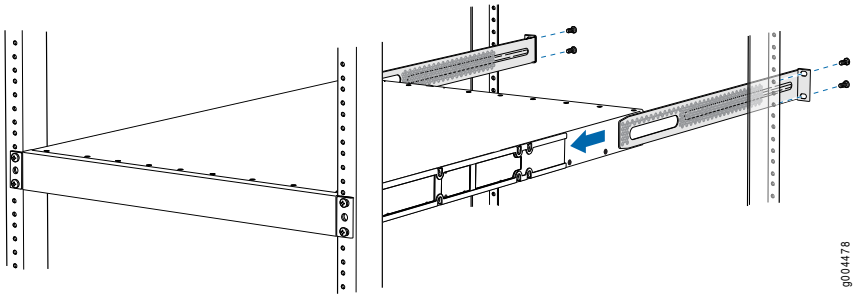

9. Ensure that the switch chassis is level by verifying that all the screws on the front of the rack are aligned with the screws at the back of the rack.

Two -Post Procedure

You can center mount a QFX5100-96S on two posts of a 19-in. rack or cabinet by using the short mounting brackets provided with the switch. Other product SKUs of the QFX5100 are not recommended for a two post installation.

To mount the switch on two posts in a rack using the provided mounting kit:

1. Attach the ESD grounding strap to your bare wrist and to a site ESD point.

2. Decide whether the Field Replaceable Unit (FRU) end of the switch or the port end is to be placed at the front of the rack. Position the switch in such a manner that the **AIR IN** labels on components are next to the cold aisle and the **AIR OUT** labels on components are next to the hot aisle.

3. Align the ten mounting holes on the short mounting bracket with one of the three sets of corresponding holes along the side of the switch chassis. See Figure 177 on page 440.

Figure 177: Attaching a Two-Post Mounting Bracket to QFX5100-96S

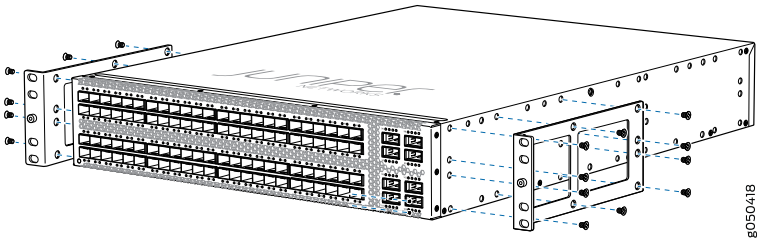

4. Attach the mounting bracket to the QFX5100-96S switch using ten mounting screws (and cage nuts and washers if your rack requires them).

5. Repeat this procedure for the mounting bracket on the opposite side of the switch. Tighten all screws.

6. Use two people to attach the brackets to the posts.

   a. Have one person grasp both sides of the switch and lift it into place.

   b. Ensure that the switch is level. See Figure 178 on page 441.

 Copyright © 2018, Juniper Networks, Inc.

Figure 178: Mounting the Switch on Two Posts in a Rack

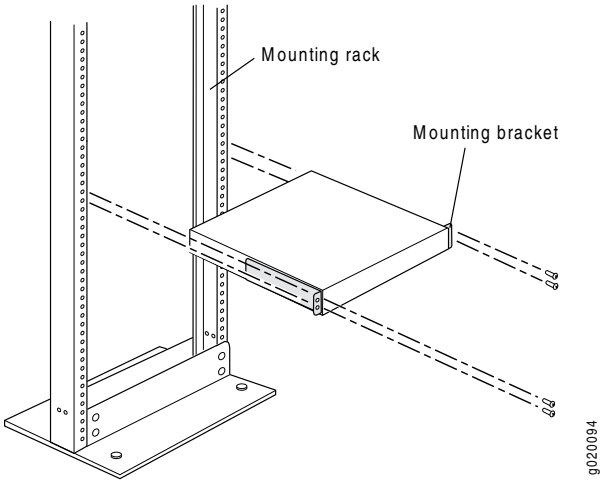

c. Have the second person use the four mounting screws (and cage nuts and washers if your rack requires them) to screw the mounting bracket to the rack.

7. Attach a ground cable to earth ground and then attach it to the chassis grounding points, as described in "Connecting Earth Ground to a QFX5100 Device" on page 442.

Related Documentation

- Rack-Mounting and Cabinet-Mounting Warnings on page 343
- Connecting AC Power to a QFX5100 Device on page 443
- Connecting Earth Ground to a QFX5100 Device on page 442

Connecting Earth Ground to a QFX5100 Device

To meet safety and electromagnetic interference (EMI) requirements and to ensure proper operation, you must connect the QFX5100 device to earth ground before you connect it to power.

For installations that require a separate grounding conductor to the chassis, you must attach a protective earthing terminal bracket on the QFX5100 device left front mounting bracket to connect to the earth ground (see Figure 179 on page 443).

Before you connect earth ground to the protective earthing terminal of a QFX5100 device, ensure that a licensed electrician has attached an appropriate grounding lug to the grounding cable.

CAUTION: **Using a grounding cable with an incorrectly attached lug can damage the switch.**

NOTE: **Mount your switch in the rack or cabinet before attaching the grounding lug to the switch. See** "Mounting a QFX5100 Device in a Rack or Cabinet" on page 435.

Ensure that you have the following parts and tools available:

- Protective earthing terminal bracket—This bracket attaches to the QFX5100 switch chassis through the left front mounting bracket, providing a protective earthing terminal for the switch.
- Grounding cable for your QFX5100 device—The grounding cable must be 14 AWG (2 mm^2), minimum 90° C wire, or as permitted by the local code.
- Grounding lug for your grounding cable—The grounding lug required is a Panduit LCD10-10A-L or equivalent.
- Two SAE 10-32 washers and screws—To attach the grounding lug to the protective earthing terminal.
- Screwdriver to attach the screws.

An AC-powered QFX5100 switch chassis gains additional grounding when you plug the power supply in the switch into a grounded AC power outlet by using an AC power cord appropriate for your geographical location. See "AC Power Cord Specifications for a QFX Series Device" on page 292.

To connect earth ground to a QFX5100 device:

1. Attach one end of the grounding cable to an appropriate earth ground site, such as the mounting rack.

 Copyright © 2018, Juniper Networks, Inc.

2. Position the grounding lug over the protective earthing terminal on the side of the chassis, which is visible through the mounting bracket.

3. Secure the grounding lug to the protective earthing terminal with the washers and screws. See Figure 179 on page 443 and Figure 180 on page 443.

Figure 179: Connecting a Grounding Cable to a 1 U QFX5100 Device

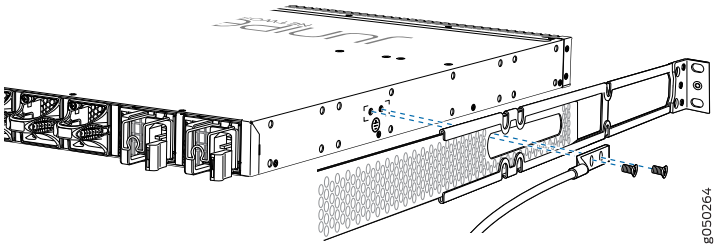

Figure 180: Connecting a Grounding Cable to the 2 U QFX5100-96S Device

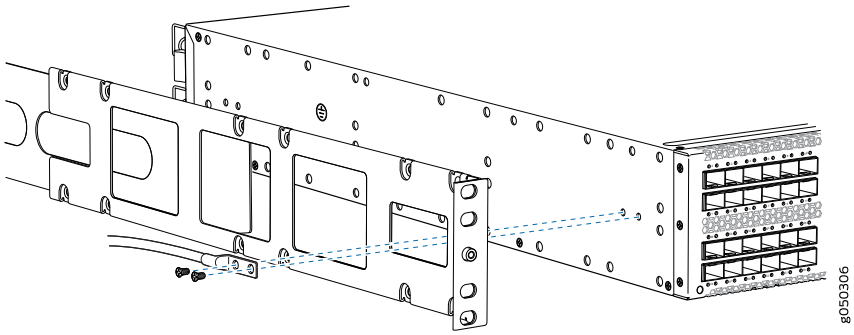

4. Dress the grounding cable and ensure that it does not touch or block access to other device components and that it does not drape where people could trip over it.

Related Documentation

- General Safety Guidelines and Warnings on page 329
- Grounded Equipment Warning on page 347
- Connecting AC Power to a QFX5100 Device on page 443
- Connecting DC Power to a QFX5100 Device on page 446

Connecting AC Power to a QFX5100 Device

The QFX5100 is shipped from the factory with two power supplies. Each power supply is a hot-removable and hot-insertable field-replaceable unit (FRU) when the second power supply is installed and running. You can install replacement power supplies in the two slots next to the fan modules without powering off the switch or disrupting the switching function.

Ensure that you have a power cord appropriate for your geographical location available to connect AC power to the switch.

Before you begin connecting AC power to the switch:

- Ensure that you have taken the necessary precautions to prevent electrostatic discharge (ESD) damage (see "Prevention of Electrostatic Discharge Damage" on page 360).
- Ensure that you have connected the switch chassis to earth ground.

CAUTION: Before you connect power to the switch, a licensed electrician must attach a cable lug to the grounding and power cables that you supply. A cable with an incorrectly attached lug can damage the switch (for example, by causing a short circuit).

To meet safety and electromagnetic interference (EMI) requirements and to ensure proper operation, you must connect the chassis to earth ground before you connect it to power. For installations that require a separate grounding conductor to the chassis, use the protective earthing terminal on the switch chassis to connect to the earth ground. For instructions on connecting earth ground, see "Connecting Earth Ground to a QFX5100 Device" on page 442. The switch gains additional grounding when you plug the power supply in the switch into a grounded AC power outlet by using the AC power cord appropriate for your geographical location (see "AC Power Supply for a QFX5100 Device" on page 94).

- Install the power supply in the chassis. For instructions on installing a power supply in a QFX5100 device, see "Installing a Power Supply in a QFX5100 Device" on page 668.

NOTE: Each power supply must be connected to a dedicated power source outlet.

To connect AC power to a QFX5100 device:

1. Attach the grounding strap to your bare wrist and to a site ESD point.

2. Ensure that the power supplies are fully inserted in the chassis and the latches are secure. If only one power supply is installed, ensure a that blank cover panel is installed over the second power supply slot.

3. Locate the power cord or cords shipped with the switch; the cords have plugs appropriate for your geographical location. See "AC Power Cord Specifications for a QFX Series Device" on page 292.

WARNING: Ensure that the power cord does not block access to device components or drape where people can trip on it.

Copyright © 2018, Juniper Networks, Inc.

4. Connect each power supply to the power sources. Insert the coupler end of the power cord into the AC power cord inlet on the AC power supply faceplate.

5. Push the power cord retainer onto the power cord (see Figure 181 on page 445 and Figure 182 on page 445).

Figure 181: Connecting an AC Power Cord to an AC Power Supply in a 1 U QFX5100 Device

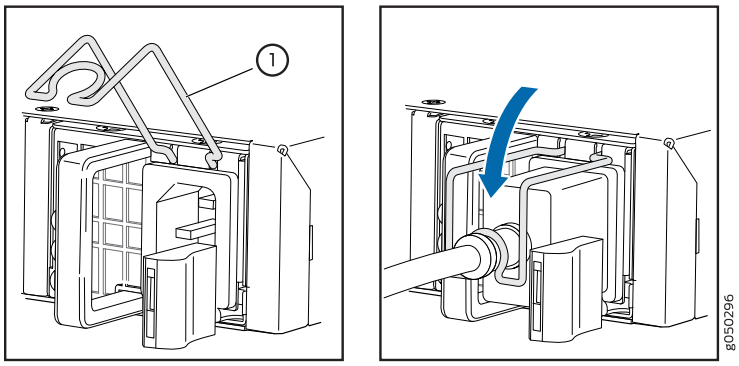

1— Power cord retainer	

Figure 182: Connecting an AC Power Cord to an AC Power Supply in a 2 U QFX5100 Device

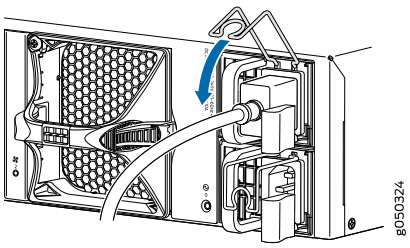

6. If the AC power source outlet has a power switch, set it to the OFF (O) position.

NOTE: **The switch powers on as soon as power is provided to the power supply. There is no power switch on the device.**

7. Insert the power cord plug into an AC power source outlet.

8. If the AC power source outlet has a power switch, set it to the ON (|) position.

9. Verify that the AC and DC LEDs on each power supply are lit green.

   If the amber fault LED is lit, remove power from the power supply, and replace the power supply (see "Removing a Power Supply from a QFX5100 Device" on page 666). Do not remove the power supply until you have a replacement power supply ready: the power supplies or a blank cover panel must be installed in the switch to ensure proper airflow.

Copyright © 2018, Juniper Networks, Inc.

CAUTION: Replace a failed power supply with a blank panel or new power supply within 1 minute of removal to prevent chassis overheating.

CAUTION: A system reboot with Routing Engine FPGA version 7.1 might not successfully boot the Junos OS software. In case of a system reboot failure, you need to power cycle the switch. To check the current FPGA version, issue the show chassis firmware command.

Related Documentation

- AC Power Supply for a QFX5100 Device on page 94
- AC Power Supply LEDs on a QFX5100 Device on page 745

Connecting DC Power to a QFX5100 Device

The QFX5100 is shipped from the factory with two power supplies. Each power supply is a hot-removable and hot-insertable field-replaceable unit (FRU) when the second power supply is installed and running. You can install replacement power supplies in the two slots next to the fan modules without powering off the switch or disrupting the switching function.

WARNING: DC-powered QFX5100 devices are intended for installation only in a restricted access location.

NOTE: The battery returns of the DC power supply must be connected as an isolated DC return (DC-I).

Before you begin connecting DC power to the switch:

- Ensure that you have taken the necessary precautions to prevent electrostatic discharge (ESD) damage (see "Prevention of Electrostatic Discharge Damage" on page 360).
- Ensure that you have connected the switch chassis to earth ground.

CAUTION: Before you connect power to the switch, a licensed electrician must attach a cable lug to the grounding and power cables that you supply. A cable with an incorrectly attached lug can damage the switch (for example, by causing a short circuit).

To meet safety and electromagnetic interference (EMI) requirements and to ensure proper operation, you must connect the chassis to earth ground before you connect it to power. For installations that require a separate grounding conductor to the chassis, use the protective earthing terminal

Copyright © 2018, Juniper Networks, Inc.

on the switch chassis to connect to the earth ground. For instructions on connecting earth ground, see "Connecting Earth Ground to a QFX5100 Device" on page 442.

- Install the power supply in the chassis. For instructions on installing a power supply in a QFX5100 device, see "Installing a Power Supply in a QFX5100 Device" on page 668.

Ensure that you have the following parts and tools available:

- DC power source cables (14–16 AWG) with ring lug (Molex 190700069 or equivalent) (not provided)
- Phillips (+) screwdriver, number 2 (not provided)
- Multimeter (not provided)

To connect DC power to a QFX5100 device:

1. Attach the grounding strap to your bare wrist and to a site ESD point.

2. Verify that the DC power cables are correctly labeled before making connections to the power supply. In a typical power distribution scheme where the return is connected to chassis ground at the battery plant, you can use a multimeter to verify the resistance of the –48V and RTN DC cables to chassis ground:
   - The cable with very low resistance (indicating a closed circuit) to chassis ground is positive (+) and will be installed on the V+ (return) DC power input terminal.
   - The cable with very high resistance (indicating an open circuit) to chassis ground is negative (–) and will be installed on the V– (input) DC power input terminal.

   CAUTION: You must ensure that power connections maintain the proper polarity. The power source cables might be labeled (+) and (–) to indicate their polarity. There is no standard color coding for DC power cables. The color coding used by the external DC power source at your site determines the color coding for the leads on the power cables that attach to the DC power input terminals on each power supply.

3. Ensure that the input circuit breaker is open so that the voltage across the DC power source cable leads is 0 V and that the cable leads do not become active while you are connecting DC power.

   NOTE: The V+ terminals are referred to as +RTN, and V– terminals are referred to as –48 V in "DC Power Wiring Sequence Warning" on page 367 and "DC Power Electrical Safety Guidelines" on page 364.

4. Ensure that the power supplies are fully inserted in the chassis.

5. Remove the terminal block cover. The terminal block cover is a piece of clear plastic that snaps into place over the terminal block (see Figure 183 on page 449).

6. Remove the screws on the terminals using the screwdriver. Save the screws.

   WARNING: **Ensure that the power cables do not block access to device components or drape where people can trip on them.**

7. Connect each power supply to the power sources. Secure power source cables to the power supplies by screwing the ring lugs attached to the cables to the appropriate terminals by using the screw from the terminals (see Figure 183 on page 449 and Figure 184 on page 449).

   The QFX5100 is designed to operate with a DC power supply that has a single, non-redundant, feed input. For source redundancy, two DC power supplies must be installed in QFX5100; connect source (A) to one power supply and connect source (B) to the second power supply. This configuration provides the commonly deployed A/B feed redundancy for the system.

   The terminal block of the power supply has four terminals labeled V+, V+, V–, and V– for connecting DC power source cables labeled positive (+) and negative (–). The V+ terminals are shunted internally together, as are the V- terminals.

   CAUTION: **The connection between each power source and power supply must include a circuit breaker.**

   Do not connect two sources to a single power supply because doing so can potentially cause circulating current in feed wires whenever there is any difference in the voltage of the two sources.

   NOTE: **For QFX5100-96S installations using battery backup, a single 15 A circuit breaker is recommended.**

   a. Secure the ring lug of the positive (+) DC power source cable to the V+ terminal on the DC power supply.

   b. Secure the ring lug of the negative (–) DC power source cable to the V– terminal on the DC power supply.

   c. Tighten the screws on the power supply terminals until snug using the screwdriver. Do not overtighten—apply between 5 in-lb (0.56 Nm) and 6 in-lb (0.68 Nm) of torque to the screws.

Copyright © 2018, Juniper Networks, Inc.

Figure 183: DC Power Supply Faceplate for a QFX5100 Device

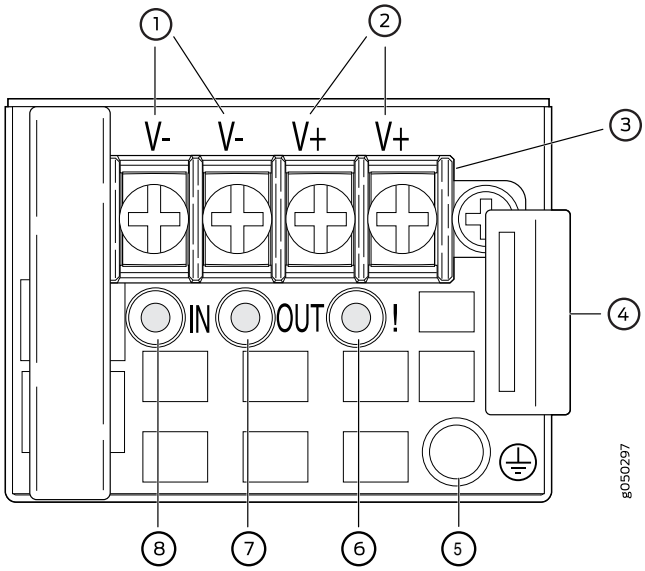

1—Shunt negative input terminals (-48V)	5—ESD grounding point
2—Shunt positive input terminals (+RTN)	6—Fault LED
3—Terminal block	7—Output LED
4—Ejector lever	8—Input LED

CAUTION: The V+ terminals are shunted internally together, as are the V- terminals. The same polarity terminal can be wired together from the same source to provide an additional current path in a higher power chassis. Do not connect the terminals to different sources.

Figure 184: Securing Ring Lugs to the Terminals on the QFX5100 DC Power Supply

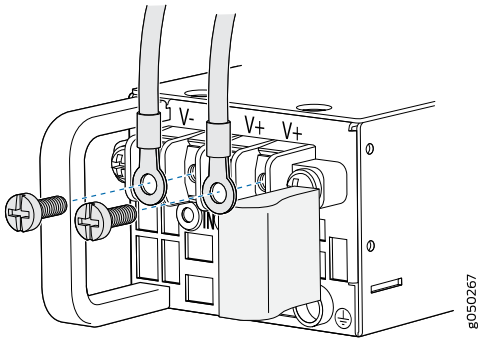

8. Replace the terminal block cover.

9. Close the input circuit breaker.

NOTE: The switch powers on as soon as power is provided to the power supply. There is no power switch on the device.

10. Verify that the **IN** and **OUT** LEDs on the power supply are lit green and are on steadily.

CAUTION: A system reboot with Routing Engine FPGA version 7.1 might not successfully boot the Junos OS software. In case of a system reboot failure, you need to power cycle the switch. To check the current FPGA version, issue the **show chassis firmware** command.

Related Documentation

- DC Power Supply in a QFX5100 Device on page 96
- DC Power Supply LEDs on a QFX5100 Device on page 746

Connecting a QFX Series Device to a Management Console

The QFX Series has a console port with an RJ-45 connector. Use the console port to connect the device to a management console or to a console server.

Ensure that you have an RJ-45 to DB-9 rollover cable available. An RJ-45 cable with an RJ-45 to DB-9 adapter is provided with the device.

NOTE: If your laptop or PC does not have a DB-9 male connector pin and you want to connect your laptop or PC directly to the QFX Series, use a combination of the RJ-45 cable and RJ-45 to DB-9 adapter supplied with the device and a USB to DB-9 male adapter. You must provide the USB to DB-9 male adapter.

To connect the QFX Series to a management console (see Figure 151 on page 387 and Figure 152 on page 387):

1. Connect one end of the Ethernet cable to the console port (labeled **CON**).

2. Connect the other end of the Ethernet cable into the console server (see Figure 151 on page 387) or management console (see Figure 152 on page 387).

Copyright © 2018, Juniper Networks, Inc.

Figure 185: Connecting the QFX Series to a Management Console Through a Console Server

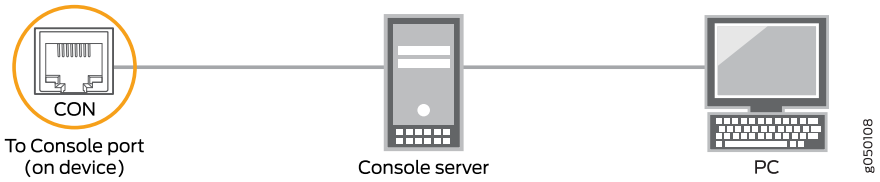

Figure 186: Connecting the QFX Series Directly to a Management Console

Related Documentation

- *Console Port Connector Pinouts for the QFX Series*
- *Configuring Console and Auxiliary Port Properties*

Copyright © 2018, Juniper Networks, Inc.

CHAPTER 32

Installing a QFX3600 Node Device

- Installing and Connecting a QFX3600 or QFX3600-I Device on page 453
- Unpacking a QFX3600 or QFX3600-I Device on page 454
- Mounting a QFX3600 or QFX3600-I Device on Two Posts in a Rack or Cabinet on page 455
- Mounting a QFX3600 or QFX3600-I Device on Four Posts in a Rack or Cabinet on page 458
- Connecting Earth Ground to QFX3600 or QFX3600-I Devices on page 462
- Connecting AC Power to a QFX3500, QFX3600, or QFX3600-I Device on page 463
- Connecting DC Power to a QFX3500, QFX3600, or QFX3600-I Device on page 466
- Connecting a QFX Series Device to a Management Console on page 470

Installing and Connecting a QFX3600 or QFX3600-I Device

To install and connect a QFX3600 or QFX3600-I device:

1. Follow the instructions in "Unpacking a QFX3600 or QFX3600-I Device" on page 454.

2. Mount the device by following the instructions appropriate for your site:
   - Mounting a QFX3600 or QFX3600-I Device on Two Posts in a Rack or Cabinet on page 455
   - Mounting a QFX3600 or QFX3600-I Device on Four Posts in a Rack or Cabinet on page 458
3. Follow the instructions in "Connecting Earth Ground to QFX3600 or QFX3600-I Devices" on page 462.

4. Follow the instructions for connecting power as appropriate for your site:
   - Connecting AC Power to a QFX3500, QFX3600, or QFX3600-I Device on page 463
   - Connecting DC Power to a QFX3500, QFX3600, or QFX3600-I Device on page 466
5. Depending on how you will be using the QFX3600 or QFX3600-I device, take one of the following actions:

Copyright © 2018, Juniper Networks, Inc.

- If you are using the QFX3600 device as a standalone switch, follow the instructions in *Configuring a QFX3600 Device as a Standalone Switch*.
- If you are using the QFX3600 device as a Node device in a QFX3000-G QFabric system, see "QFX3000-G QFabric System Installation Overview" on page 373 for information about the steps to install and configure your QFX3000-G QFabric system.
- If you are using the QFX3600 device as a Node device in a QFX3000-M QFabric system, see *QFX3000-M QFabric System Installation Overview* for information about the steps to install and configure your QFX3000-M QFabric system.
- If you are using the QFX3600-I device as an Interconnect device in a QFX3000-M QFabric system, see *QFX3000-M QFabric System Installation Overview* for information about the steps to install and configure your QFX3000-M QFabric system.

Related Documentation

- Rack Requirements for a QFX3600 or QFX3600-I Device on page 233
- Cabinet Requirements for a QFX3600 or QFX3600-I Device on page 241
- Clearance Requirements for Airflow and Hardware Maintenance for a QFX3600 or QFX3600-I Device on page 249

Unpacking a QFX3600 or QFX3600-I Device

The QFX3600 or QFX3600-I device chassis is a rigid sheet-metal structure that houses the hardware components. QFX3600 and QFX3600-I devices are shipped in a cardboard carton, secured with foam packing material. The carton also contains an accessory box and quick start instructions.

CAUTION: **QFX3600 and QFX3600-I devices are maximally protected inside the shipping carton. Do not unpack the device until you are ready to begin installation.**

To unpack a QFX3600 or QFX3600-I device:

1. Move the shipping carton to a staging area as close to the installation site as possible, but where you have enough room to remove the system components.
2. Position the carton so that the arrows are pointing up.
3. Open the top flaps on the shipping carton.
4. Remove the accessory box and verify the contents against the inventory included in the box. Table 139 on page 455 lists the inventory of components supplied with a QFX3600 or QFX3600-I device.

 Copyright © 2018, Juniper Networks, Inc.

5. Pull out the packing material holding the device in place.

6. Verify the chassis components received:
   - Three fan trays
   - Two power supplies
7. Save the shipping carton and packing materials in case you need to move or ship the device later.

Table 139: Accessory Kit Part Contents

Parts	Quantity
Chassis grounding lug	1
M5 screws to attach the chassis grounding lug to the protective earth terminal on the chassis	2
Electrostatic discharge (ESD) grounding strap NOTE: Use only clip-style ESD grounding straps with the chassis grounding lug.	1
SFP/SFP+ port dust covers	2
QSFP+ port dust covers	16
RJ-45 cable and RJ-45 to DB-9 adapter for console port connection	1
Mounting brackets for front-mounting in a four-post rack or cabinet	2
M4 flat-head screws to attach the brackets for front-mounting in a rack or cabinet	6
Rear installation blades for front-mounting in a four-post rack or cabinet	2
Mounting brackets for front-mounting in a two-post rack or cabinet	2
Mounting brackets for mid-mounting in a two-post rack or cabinet	2
M4 pan-head screws to attach the brackets for front-mounting or mid-mounting in a rack or cabinet	6

Related Documentation

- Installing and Connecting a QFX3600 or QFX3600-I Device on page 453

Mounting a QFX3600 or QFX3600-I Device on Two Posts in a Rack or Cabinet

You can mid-mount a QFX3600 or QFX3600-I device on two posts of a 19-in. rack or cabinet by using the mounting brackets provided with the device. (The remainder of this topic uses “rack” to mean “rack or cabinet.”)

You can also mount the device on four posts of a four-post rack by using the mounting brackets provided with the device. See "Mounting a QFX3600 or QFX3600-I Device on Four Posts in a Rack or Cabinet" on page 458.

The holes in the mounting brackets are placed at 1 U (1.75 in., or 4.45 cm.) apart so that the device can be mounted in any rack that provides holes spaced at that distance.

Before mounting a QFX3600 or QFX3600-I device on two posts in a rack:

- Ensure you understand how to prevent electrostatic discharge (ESD) damage. See "Prevention of Electrostatic Discharge Damage" on page 360.
- Verify that the site meets the requirements described in "Site Preparation Checklist for a QFX3600 or QFX3600-I Device" on page 212.
- Place the rack in its permanent location, allowing adequate clearance for airflow and maintenance, and secure it to the building structure.
- Read "General Safety Guidelines and Warnings" on page 329, with particular attention to "Chassis Lifting Guidelines for a QFX3600 or QFX3600-I Device" on page 340.
- Remove the device from the shipping carton (see "Unpacking a QFX3600 or QFX3600-I Device" on page 454).

Ensure that you have the following parts and tools available:

- ESD grounding strap (provided)
- One pair of mounting brackets depending on how you want to mount the device (provided)
  - Use the front/rear mounting brackets (part number 540-038579) to front-mount or rear-mount the device.
  - Use the mid-mounting brackets (part number 540-038665) to mid-mount the device.
- 6 Phillips 4x6-mm pan-head mounting screws (provided)
- Four screws to secure the chassis to the rack (not provided)
- Appropriate screwdriver for the mounting screws (not provided)

NOTE: **One person must be available to lift the device while another secures the device to the rack.**

CAUTION: **If you are mounting multiple device on a rack, mount a device in the bottom of the rack first and proceed to mount the rest of the devices from bottom to top.**

Copyright © 2018, Juniper Networks, Inc.

To mount the device on two posts in a rack:

1. Attach the ESD grounding strap to your bare wrist and to a site ESD point.

2. Place the device on a flat, stable surface.

3. Align the mid-mounting brackets (part number 540-038665) with the holes on the side panels of the device chassis, such that the mounting ears are in the center of the side panels. See Figure 187 on page 457.

4. Insert mounting screws into the aligned holes. Tighten the screws.

5. Have one person grasp both sides of the device, lift the device, and position it in the rack, aligning the mounting ear holes with the threaded holes in the rack or cabinet rail. Align the bottom mounting ear hole in both the mounting brackets with a hole in each rack rail, making sure the chassis is level. See Figure 187 on page 457.

6. Have a second person secure the device to the rack by using the appropriate screws. Tighten the screws.

7. Ensure that the device chassis is level by verifying that all screws on one side of the rack are aligned with the screws on the other side.

Figure 187: Mounting the Device on Two Posts in a Rack

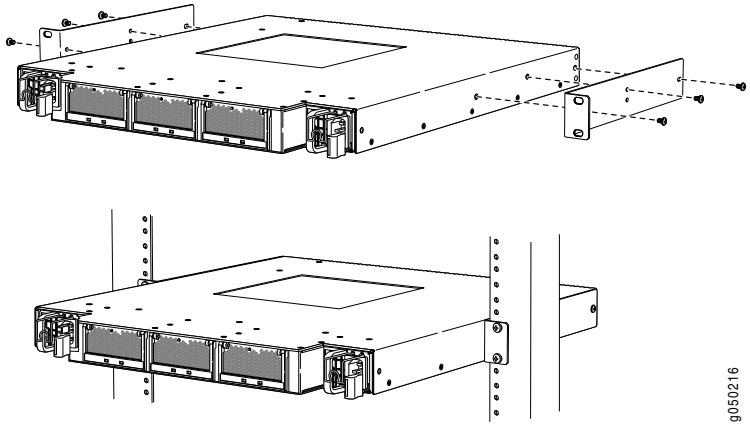

Related Documentation

- Rack-Mounting and Cabinet-Mounting Warnings on page 343
- Connecting Earth Ground to QFX3600 or QFX3600-I Devices on page 462
- Connecting AC Power to a QFX3500, QFX3600, or QFX3600-I Device on page 463
- Connecting DC Power to a QFX3500, QFX3600, or QFX3600-I Device on page 466

Copyright © 2018, Juniper Networks, Inc.

Mounting a QFX3600 or QFX3600-I Device on Four Posts in a Rack or Cabinet

You can front-mount or rear-mount a QFX3600 or QFX3600-I device on four posts in a 19-in. rack or cabinet by using the mounting brackets and installation blades provided with the device. (The remainder of this topic uses “rack” to mean “rack or cabinet.”) The front and rear rack rails must be spaced between 19.3 in. (49 cm) and 36 in. (91.4 cm) front to back.

You can also mount the device on two posts of a 19-in. rack or cabinet by using the mounting brackets provided with the device. See “Mounting a QFX3600 or QFX3600-I Device on Two Posts in a Rack or Cabinet” on page 455.

The holes in the mounting brackets and installation blades are placed at 1 U (1.75 in., or 4.45 cm.) apart so that the device can be mounted in any rack that provides holes spaced at that distance.

Before you begin mounting a QFX3600 or QFX3600-I device on the rack or cabinet:

- Ensure you understand how to prevent electrostatic discharge (ESD) damage. See “Prevention of Electrostatic Discharge Damage” on page 360.
- Verify that the site meets the requirements described in “Site Preparation Checklist for a QFX3600 or QFX3600-I Device” on page 212.
- Place the rack in its permanent location, allowing adequate clearance for airflow and maintenance, and secure it to the building structure.
- Read “General Site Guidelines” on page 217, with particular attention to “Chassis Lifting Guidelines for a QFX3600 or QFX3600-I Device” on page 340.
- Remove the device from the shipping carton (see “Unpacking a QFX3600 or QFX3600-I Device” on page 454).

Ensure that you have the following parts and tools available to mount the device on four posts in a rack:

- ESD grounding strap (provided).
- One pair of mounting brackets (part number 540-038596) (provided).
- One pair of rear installation blades (part number 540-038598). These installation blades support the rear of the chassis, and must be installed (provided).
- 6 Phillips 4x5-mm flat-head mounting screws (provided).
- Eight screws to secure the chassis and rear installation blades to the rack (not provided).
- Appropriate screwdriver for the mounting screws (not provided).

WARNING: **QFX3600 and QFX3600-I devices must be supported at all four corners. Mounting the chassis using only the front brackets damages the chassis and can result in serious bodily injury.**

Copyright © 2018, Juniper Networks, Inc.

CAUTION: If you are installing the QFX3600 or QFX3600-I device above 60 in. (152.4 cm) from the floor, you must remove the power supplies and fan trays before attempting to install the device, or ask someone to assist you during the installation.

CAUTION: If you are mounting multiple devices on a rack, mount the device in the lowest position of the rack first, and proceed to mount the rest of the devices from bottom to top.

To mount the device on four posts in a rack:

1. Attach the ESD grounding strap to your bare wrist and to a site ESD point.

2. Decide where to position the device in the rack.

3. Install the rear installation blades. See Figure 188 on page 459.

   a. With two mounting screws—and cage nuts and washers if your rack requires them—attach one of the rear installation blades to the left rear of the rack at the point where you want to mount the device. Tighten the screws.

   b. Position the second rear installation blade at the desired position in the right rear of the rack, so that it is on the same rack level as the left rear installation blade. If the right and left rear installation blades are not on the same level, the chassis will rest at an angle in the rack instead of resting flat and level.

   c. With two mounting screws—and cage nuts and washers if your rack requires them—attach the second rear installation blade to the right rear of the rack at the point where you want to mount the device. Tighten the screws.

Figure 188: Attaching the Installation Blades to the Rear of the Rack

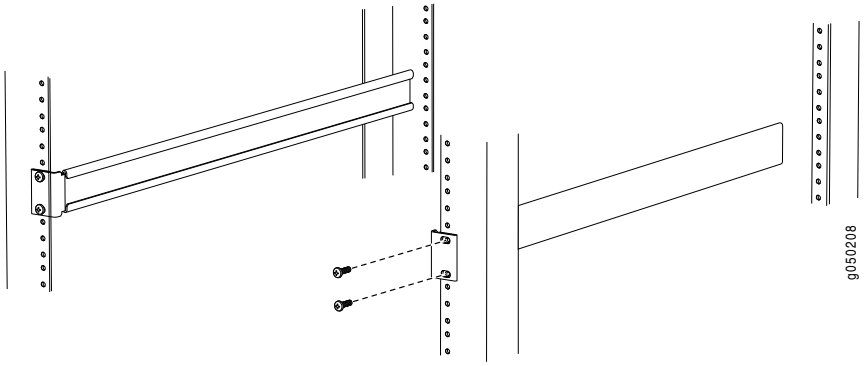

4. Prepare the device for mounting.

a. Place the device on a flat, stable surface.

b. Align the mounting brackets along the front or rear of the side panels of the device chassis depending on how you want to mount the device. For example, if you want to front-mount the device, align the brackets along the front of the side panel such that the mounting ears are in the front of the device chassis. See Figure 189 on page 461.

c. Align the holes in the mounting brackets with holes on the side panels of the device chassis.

d. Insert mounting screws into the aligned holes. Tighten the screws.

5. Mount the device.

a. Grasp both sides of the device, lift it, and position it in the rack so that the rear of the chassis slides onto the installation blade. See Figure 189 on page 461.

TIP: **If someone is assisting you, have one person stand at the rear of the rack where the installation blade is installed, to help guide the device onto the installation blade.**

b. Align the holes in the front brackets on the chassis with the holes in the rack. Ensure that the chassis is level.

c. With four mounting screws—and cage nuts and washers if your rack requires them—secure the front of the device to the rack. Tighten the screws.

d. Ensure that the device chassis is level by verifying that all screws on one side of the rack are aligned with the screws on the other side.

Copyright © 2018, Juniper Networks, Inc.

Figure 189: Mounting the Device on Four Posts

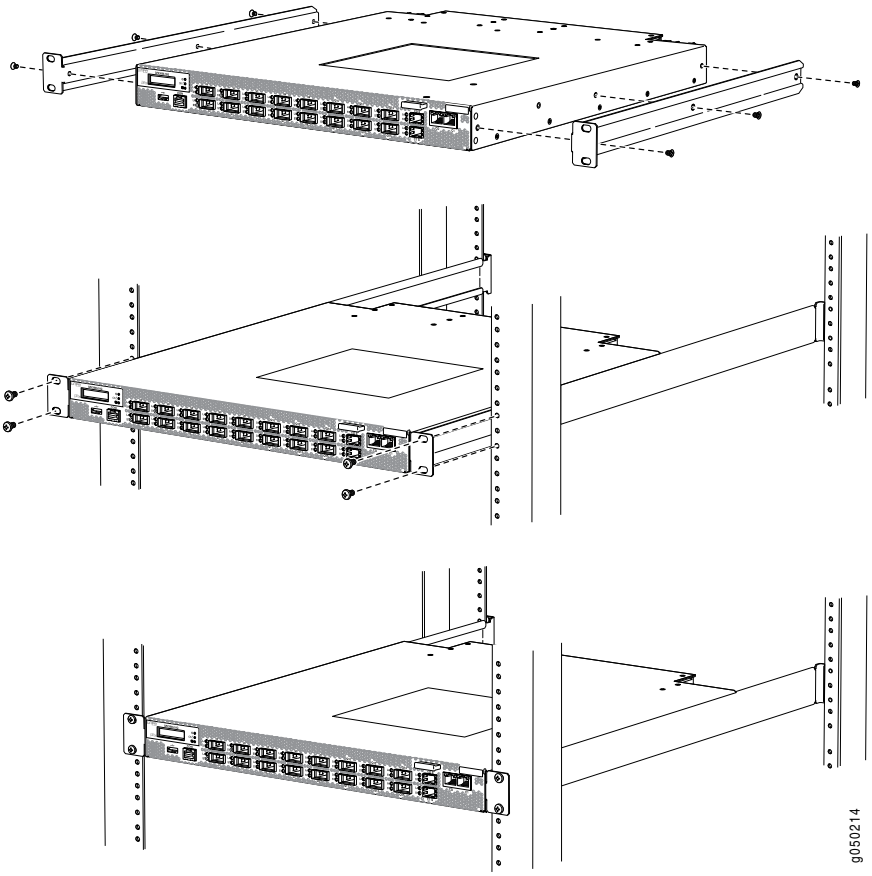

Related Documentation

- Rack-Mounting and Cabinet-Mounting Warnings on page 343
- Connecting Earth Ground to QFX3600 or QFX3600-I Devices on page 462
- Connecting AC Power to a QFX3500, QFX3600, or QFX3600-I Device on page 463
- Connecting DC Power to a QFX3500, QFX3600, or QFX3600-I Device on page 466
- *Configuring a QFX3600 Device as a Standalone Switch*

Connecting Earth Ground to QFX3600 or QFX3600-I Devices

To meet safety and electromagnetic interference (EMI) requirements and to ensure proper operation, you must connect the QFX3600 and QFX3600-I devices to earth ground before you connect it to power.

For installations that require a separate grounding conductor to the chassis, use the protective earthing terminal on the left rear of the chassis to connect to the earth ground (see Figure 190 on page 463).

Before you connect earth ground to the protective earthing terminal of a QFX3600 or QFX3600-I device, ensure that a licensed electrician has attached an appropriate grounding lug to the grounding cable.

CAUTION: **Using a grounding cable with an incorrectly attached lug can damage the switch.**

NOTE: **Mount your device in the rack or cabinet before attaching the grounding lug to the switch. See** "Mounting a QFX3600 or QFX3600-I Device on Two Posts in a Rack or Cabinet" on page 455 **and** "Mounting a QFX3600 or QFX3600-I Device on Four Posts in a Rack or Cabinet" on page 458.

Ensure that you have the following parts and tools available:

- Grounding cable for your QFX3600 or QFX3600-I device—The grounding cable must be 14 AWG (2 mm^2), minimum 90° C wire, or as permitted by the local code.
- Grounding lug for your grounding cable—The grounding lug required is a Panduit LCD10-10A-L or equivalent. This grounding lug is provided in the accessory kit.
- Two M5 screws with integrated washers—The screws are used to secure the grounding lug to the protective earthing terminal. The screws are provided in the accessory kit.
- Phillips (+) screwdriver, number 2.

An AC-powered QFX3600 or QFX3600-I device chassis gains additional grounding when you plug the power supply in the switch into a grounded AC power outlet by using an AC power cord appropriate for your geographical location. See "AC Power Cord Specifications for a QFX Series Device" on page 292.

To connect earth ground to a QFX3600 or QFX3600-I device:

1. Connect one end of the grounding cable to a proper earth ground, such as the rack in which the device is mounted.

2. Place the grounding lug attached to the grounding cable over the protective earthing terminal.

Copyright © 2018, Juniper Networks, Inc.

3. Secure the grounding lug to the protective earthing terminal with screws.

4. Dress the grounding cable and ensure that it does not touch or block access to other switch components and that it does not drape where people could trip over it.

Figure 190: Connecting a Grounding Cable to a QFX3600 or QFX3600-I Device

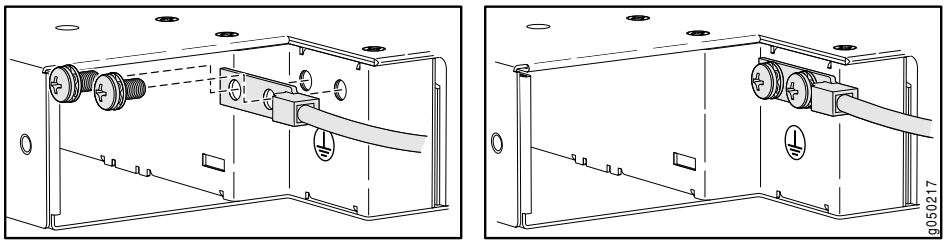

Related Documentation

- General Safety Guidelines and Warnings on page 329
- Grounded Equipment Warning on page 347
- Connecting AC Power to a QFX3500, QFX3600, or QFX3600-I Device on page 463
- Connecting DC Power to a QFX3500, QFX3600, or QFX3600-I Device on page 466

Connecting AC Power to a QFX3500, QFX3600, or QFX3600-I Device

The QFX3500, QFX3600, and QFX3600-I devices are shipped from the factory with two 650 W power supplies pre-installed. Each power supply is a hot-removable and hot-insertable field-replaceable unit (FRU) when the second power supply is installed and running. You can install replacement power supplies without powering off the device or disrupting the switching function.

Ensure that you have a power cord appropriate for your geographical location available to connect AC power to the device.

Before you begin connecting AC power to the device:

- Ensure that you have taken the necessary precautions to prevent electrostatic discharge (ESD) damage (see "Prevention of Electrostatic Discharge Damage" on page 360).
- Ensure that you have connected the device chassis to earth ground.

CAUTION: **Before you connect power to the device, a licensed electrician must attach a cable lug to the grounding and power cables that you supply. A cable with an incorrectly attached lug can damage the device (for example, by causing a short circuit).**

To meet safety and electromagnetic interference (EMI) requirements and to ensure proper operation, you must connect the chassis to earth ground before you connect it to power. For installations that require a separate grounding conductor to the chassis, use the protective earthing terminal

on the device chassis to connect to the earth ground. For instructions on connecting earth ground, see "Connecting Earth Ground to a QFX3500 Device" on page 480 or "Connecting Earth Ground to QFX3600 or QFX3600-I Devices" on page 462. The device gains additional grounding when you plug the power supply in the device into a grounded AC power outlet by using the AC power cord appropriate for your geographical location (see "AC Power Cord Specifications for a QFX Series Device" on page 292).

- Install the power supply in the chassis. For instructions on installing a power supply in a QFX3500 device, see "Installing a Power Supply in a QFX3500 Device" on page 646. For instructions on installing a power supply in a QFX3600 or QFX3600-I device, see "Installing a Power Supply in a QFX3600 or QFX3600-I Device" on page 660.

NOTE: **Each power supply must be connected to a dedicated power source outlet.**

To connect AC power to a QFX3500, QFX3600, or QFX3600-I device:

1. Attach the grounding strap to your bare wrist and to a site ESD point.

2. Ensure that the power supplies are fully inserted in the chassis and the latches are secure. If only one power supply is installed, ensure a that blank cover panel is installed over the second power supply slot.

3. Locate the power cord or cords shipped with the device; the cords have plugs appropriate for your geographical location. See "AC Power Cord Specifications for a QFX Series Device" on page 292.

   WARNING: **Ensure that the power cord does not block access to device components or drape where people can trip on it.**

4. Connect each power supply to the power sources. Insert the coupler end of the power cord into the AC power cord inlet on the AC power supply faceplate.

5. Push the power cord retainer onto the power cord (see Figure 191 on page 465 or Figure 192 on page 465).

Copyright © 2018, Juniper Networks, Inc.

Figure 191: Connecting an AC Power Cord to an AC Power Supply in a QFX3500 Device

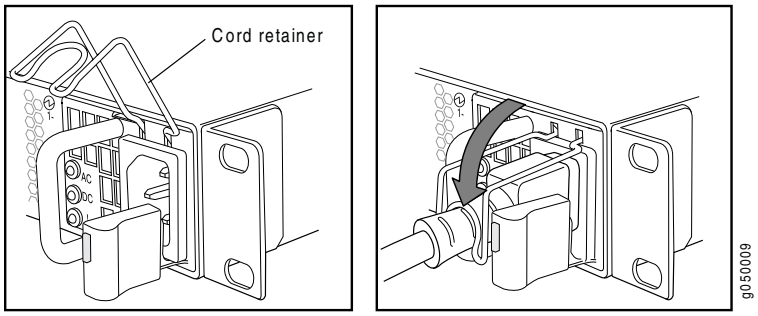

Figure 192: Connecting an AC Power Cord to an AC Power Supply in a QFX3600 or QFX3600-I Device

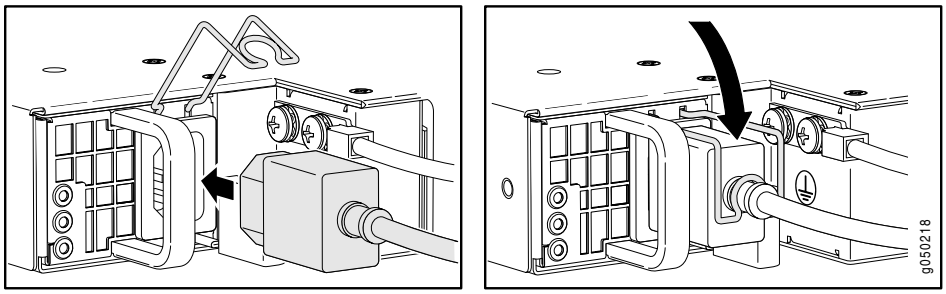

6. If the AC power source outlet has a power switch, set it to the OFF (O) position.

NOTE: **The device powers on as soon as power is provided to the power supply. There is no power switch on the device.**

7. Insert the power cord plug into an AC power source outlet.

8. If the AC power source outlet has a power switch, set it to the ON (|) position.

9. Verify that the AC and DC LEDs on each power supply are lit green.

   If the amber fault LED is lit, remove power from the power supply, and replace the power supply (see "Removing a Power Supply from a QFX3500 Device" on page 648 or "Removing a Power Supply from a QFX3600 or QFX3600-I Device" on page 658). Do not remove the power supply until you have a replacement power supply ready: the power supplies or a blank cover panel must be installed in the device to ensure proper airflow.

CAUTION: **Replace a failed power supply with a blank panel or new power supply within 1 minute of removal to prevent chassis overheating.**

Related Documentation

- AC Power Supply for a QFX3500, QFX3600, or QFX3600-I Device on page 110
- AC Power Supply LEDs on a QFX3500, QFX3600, or QFX3600-I Device on page 753

Connecting DC Power to a QFX3500, QFX3600, or QFX3600-I Device

The QFX3500, QFX3600, and QFX3600-I devices are shipped from the factory with two 650 W power supplies pre-installed. Each power supply is a hot-removable and hot-insertable field-replaceable unit (FRU) when the second power supply is installed and running. You can install replacement power supplies without powering off the device or disrupting the switching function.

WARNING: DC-powered QFX3500, QFX3600 and QFX3600-I devices are intended for installation only in a restricted access location.

NOTE: The battery returns of the DC power supply should be connected as an isolated DC return (DC-I).

Before you begin connecting DC power to the device:

- Ensure that you have taken the necessary precautions to prevent electrostatic discharge (ESD) damage (see "Prevention of Electrostatic Discharge Damage" on page 360).
- Ensure that you have connected the device chassis to earth ground.

  CAUTION: Before you connect power to the device, a licensed electrician must attach a cable lug to the grounding and power cables that you supply. A cable with an incorrectly attached lug can damage the device (for example, by causing a short circuit).

  To meet safety and electromagnetic interference (EMI) requirements and to ensure proper operation, you must connect the chassis to earth ground before you connect it to power. For installations that require a separate grounding conductor to the chassis, use the protective earthing terminal on the device chassis to connect to the earth ground. For instructions on connecting earth ground, see "Connecting Earth Ground to a QFX3500 Device" on page 480 or "Connecting Earth Ground to QFX3600 or QFX3600-I Devices" on page 462.

- Install the power supply in the chassis. For instructions on installing a power supply in a QFX3500 device, see "Installing a Power Supply in a QFX3500 Device" on page 646. For instructions on installing a power supply in a QFX3600 or QFX3600-I device, see "Installing a Power Supply in a QFX3600 or QFX3600-I Device" on page 660

Copyright © 2018, Juniper Networks, Inc.

Ensure that you have the following parts and tools available:

- DC power source cables (14–16 AWG) with ring lug (Molex 190700069 or equivalent) (not provided)
- Phillips (+) screwdriver, number 2 (not provided)
- Multimeter (not provided)

To connect DC power to a QFX3500, QFX3600 or QFX3600-I device:

1. Attach the grounding strap to your bare wrist and to a site ESD point.

2. Verify that the DC power cables are correctly labeled before making connections to the power supply. In a typical power distribution scheme where the return is connected to chassis ground at the battery plant, you can use a multimeter to verify the resistance of the –48V and RTN DC cables to chassis ground:

   - The cable with very low resistance (indicating a closed circuit) to chassis ground is positive (+) and will be installed on the V+ (return) DC power input terminal.
   - The cable with very high resistance (indicating an open circuit) to chassis ground is negative (–) and will be installed on the V– (input) DC power input terminal.

   CAUTION: **You must ensure that power connections maintain the proper polarity. The power source cables might be labeled (+) and (–) to indicate their polarity. There is no standard color coding for DC power cables. The color coding used by the external DC power source at your site determines the color coding for the leads on the power cables that attach to the DC power input terminals on each power supply.**

3. Ensure that the input circuit breaker is open so that the voltage across the DC power source cable leads is 0 V and that the cable leads do not become active while you are connecting DC power.

   NOTE: **The V+ terminals are referred to as +RTN, and V– terminals are referred to as –48 V in** "DC Power Wiring Sequence Warning" on page 367 **and** "DC Power Electrical Safety Guidelines" on page 364**.**

4. Ensure that the power supplies are fully inserted in the chassis.

5. Remove the terminal block cover. The terminal block cover is a piece of clear plastic that snaps into place over the terminal block (see Figure 193 on page 469).

6. Remove the screws on the terminals using the screwdriver. Save the screws.

WARNING: Ensure that the power cables do not block access to device components or drape where people can trip on them.

7. Connect each power supply to the power sources. Secure power source cables to the power supplies by screwing the ring lugs attached to the cables to the appropriate terminals by using the screw from the terminals (see Figure 194 on page 469 and Figure 193 on page 469).

   CAUTION: The DC power supply has four terminals labeled V+, V+, V–, and V– for connecting DC power source cables labeled positive (+) and negative (–). The V+ terminals are shunted internally together, as are the V- terminals. The same polarity terminal can be wired together from the same source to provide an additional current path in a higher power chassis. Do not connect the terminals to different sources. For example, connect –48 V from DC source feed A to the input terminals of one power supply and connect –48 V from feed B to the input terminals of the second power supply on the other side of the chassis. This configuration provides the commonly deployed A/B feed redundancy for the system.

   a. Secure the ring lug of the positive (+) DC power source cable to the V+ terminal on the DC power supply.

   b. Secure the ring lug of the negative (–) DC power source cable to the V– terminal on the DC power supply.

   c. Tighten the screws on the power supply terminals until snug using the screwdriver. Do not overtighten—apply between 5 in-lb (0.56 Nm) and 6 in-lb (0.68 Nm) of torque to the screws.

Copyright © 2018, Juniper Networks, Inc.

Figure 193: DC Power Supply Faceplate for a QFX3500, QFX3600 or QFX3600-I Device

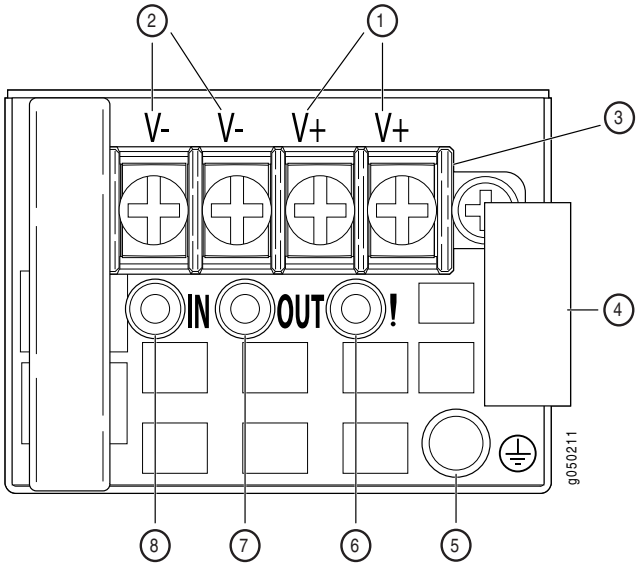

1—Shunt positive input terminals	5—ESD grounding point
2—Shunt negative input terminals	6—Fault LED
3—Terminal block	7—Output LED
4—Ejector lever	8—Input LED

CAUTION: The V+ terminals are shunted internally together, as are the V- terminals. The same polarity terminal can be wired together from the same source to provide an additional current path in a higher power chassis. Do not connect the terminals to different sources.

Figure 194: Securing Ring Lugs to the Terminals on the QFX3500, QFX3600 or QFX3600-I DC Power Supply

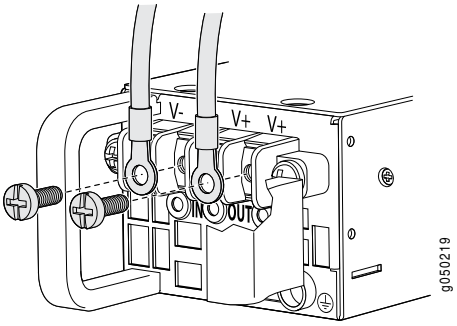

8. Replace the terminal block cover.

9. Close the input circuit breaker.

NOTE: The device powers on as soon as power is provided to the power supply. There is no power switch on the device.

10. Verify that the **IN** and **OUT** LEDs on the power supply are lit green and are on steadily.

Related Documentation

- DC Power Supply for a QFX3500, QFX3600, or QFX3600-I Device on page 112
- DC Power Supply LEDs on a QFX3500, QFX3600, or QFX3600-I Device on page 754

Connecting a QFX Series Device to a Management Console

The QFX Series has a console port with an RJ-45 connector. Use the console port to connect the device to a management console or to a console server.

Ensure that you have an RJ-45 to DB-9 rollover cable available. An RJ-45 cable with an RJ-45 to DB-9 adapter is provided with the device.

NOTE: If your laptop or PC does not have a DB-9 male connector pin and you want to connect your laptop or PC directly to the QFX Series, use a combination of the RJ-45 cable and RJ-45 to DB-9 adapter supplied with the device and a USB to DB-9 male adapter. You must provide the USB to DB-9 male adapter.

To connect the QFX Series to a management console (see Figure 151 on page 387 and Figure 152 on page 387):

1. Connect one end of the Ethernet cable to the console port (labeled **CON**).

2. Connect the other end of the Ethernet cable into the console server (see Figure 151 on page 387) or management console (see Figure 152 on page 387).

Figure 195: Connecting the QFX Series to a Management Console Through a Console Server

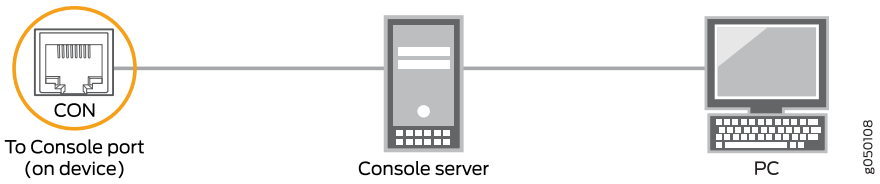

Copyright © 2018, Juniper Networks, Inc.

Figure 196: Connecting the QFX Series Directly to a Management Console

Related Documentation

- *Console Port Connector Pinouts for the QFX Series*
- *Configuring Console and Auxiliary Port Properties*

Copyright © 2018, Juniper Networks, Inc.

CHAPTER 33

Installing a QFX3500 Node Device

- Installing and Connecting a QFX3500 Device on page 473
- Unpacking a QFX3500 Device on page 474
- Mounting a QFX3500 Device in a Rack or Cabinet on page 475
- Connecting Earth Ground to a QFX3500 Device on page 480
- Connecting AC Power to a QFX3500, QFX3600, or QFX3600-I Device on page 481
- Connecting DC Power to a QFX3500, QFX3600, or QFX3600-I Device on page 484
- Connecting a QFX Series Device to a Management Console on page 488

Installing and Connecting a QFX3500 Device

To install and connect a QFX3500 device:

1. Follow the instructions in "Unpacking a QFX3500 Device" on page 474.

2. Mount the device by following the instructions in "Mounting a QFX3500 Device in a Rack or Cabinet" on page 475.

3. Follow the instructions in "Connecting Earth Ground to a QFX3500 Device" on page 480.

4. Follow the instructions in "Connecting AC Power to a QFX3500, QFX3600, or QFX3600-I Device" on page 463.

5. Depending on how you will be using the QFX3500 device, do one of the following:
   - If you are using the QFX3500 device as a standalone switch, follow the instructions in *Configuring a QFX3500 Device as a Standalone Switch*.
   - If you are using the QFX3500 device as a Node device in a QFX3000-G QFabric system, see "QFX3000-G QFabric System Installation Overview" on page 373 for information about the steps to install and configure your QFX3000-G QFabric system.
   - If you are using the QFX3500 device as a Node device in a QFX3000-M QFabric system, see *QFX3000-M QFabric System Installation Overview* for information about the steps to install and configure your QFX3000-M QFabric system.

Copyright © 2018, Juniper Networks, Inc.

Related Documentation

- Rack Requirements for a QFX3500 Device on page 235
- Cabinet Requirements for a QFX3500 Device on page 242
- Clearance Requirements for Airflow and Hardware Maintenance for a QFX3500 Device on page 250

Unpacking a QFX3500 Device

The QFX3500 device chassis is a rigid sheet-metal structure that houses the hardware components. A QFX3500 device is shipped in a cardboard carton, secured with foam packing material. The carton also contains an accessory box and quick start instructions.

CAUTION: **QFX3500 devices are maximally protected inside the shipping carton. Do not unpack the device until you are ready to begin installation.**

To unpack a QFX3500 device:

1. Move the shipping carton to a staging area as close to the installation site as possible, but where you have enough room to remove the system components.
2. Position the carton so that the arrows are pointing up.
3. Open the top flaps on the shipping carton.
4. Remove the accessory box and verify the contents against the inventory included in the box. Table 140 on page 474 lists the inventory of components supplied with a QFX3500 device.
5. Pull out the packing material holding the device in place.
6. Verify the chassis components received:
   - Management board
   - Two fan trays
   - One or two power supplies, depending on your order. If only one power supply is installed, a blank panel should be installed on the second power supply slot.
7. Save the shipping carton and packing materials in case you need to move or ship the device later.

Table 140: Inventory of Components Supplied with a QFX3500 Device

Component	Quantity
Chassis with management board, two fan trays, and one or two power supplies	1

Copyright © 2018, Juniper Networks, Inc.

Table 140: Inventory of Components Supplied with a QFX3500 Device (continued)

Component	Quantity
Rear installation blades	2
RJ-45 cable and RJ-45 to DB-9 adapter	1
SFP/SFP+ port dust covers	48
QSFP+ port dust covers	4
Electrostatic discharge (ESD) grounding strap	1

Related Documentation

- Mounting a QFX3500 Device in a Rack or Cabinet on page 475
- Installing and Connecting a QFX3500 Device on page 473

Mounting a QFX3500 Device in a Rack or Cabinet

You can mount a QFX3500 device on four posts in a 19-in. rack or cabinet by using the mounting kits provided with the device. Choose one of the following two mounting kits provided for the different QFX3500 chassis configurations.

- If your installation kit has two rails and your QFX3500 has mounting holes integrated as part of the chassis, use "Two Mounting Rails Procedure" on page 476. This configuration aligns the management end of the device flush with the rack. The adjustable rails allow for installation into racks having different depths.
- If your installation kit has four rails and the QFX3500 does not have mounting holes as part of the chassis faceplate, use "Four Mounting Rails Procedure" on page 478. This configuration allows either end of the device to be mounted flush with the rack and still be adjustable for racks with different depths.

(The remainder of this topic uses "rack" to mean "rack or cabinet.") The front and rear rack rails must be spaced between 28 in. (71.1 cm) and 36 in. (91.4 cm) front to back.

- Before You Begin Rack Installation on page 475
- Two Mounting Rails Procedure on page 476
- Four Mounting Rails Procedure on page 478

Before You Begin Rack Installation

Before you begin mounting a QFX3500 device in the rack or cabinet:

- If replacing an existing QFX3500, remove previous rack-mount hardware. The mounting bracket and mounting blade in this procedure is not compatible with other Juniper mounting kits.
- Ensure that you understand how to prevent electrostatic discharge (ESD) damage. See "Prevention of Electrostatic Discharge Damage" on page 360.

Copyright © 2018, Juniper Networks, Inc.

- Verify that the site meets the requirements described in "Site Preparation Checklist for a QFX3500 Device" on page 213.
- Place the rack in its permanent location, allowing adequate clearance for airflow and maintenance, and secure it to the building structure.
- Read "General Site Guidelines" on page 217, with particular attention to "Chassis Lifting Guidelines for a QFX3500 Device" on page 340.
- Remove the device from the shipping carton (see "Unpacking a QFX3500 Device" on page 474).

Ensure that you have the following parts and tools available to mount the device on four posts in a rack:

- ESD grounding strap (provided).
- One pair of rear installation blades. These installation blades support the rear of the chassis and must be installed (provided).
- Eight screws to secure the chassis and rear installation blades to the rack (not provided).
- Appropriate screwdriver for the mounting screws (not provided).

WARNING: **The QFX3500 device must be supported at all four corners. Mounting the chassis using only the front brackets will damage the chassis and can result in serious bodily injury.**

CAUTION: **If you are installing the QFX3500 device above 60 in. (152.4 cm) from the floor, you must remove the power supplies, fan trays, and management board before attempting to install the device, or ask someone to assist you during the installation.**

CAUTION: **If you are mounting multiple devices on a rack, mount the device in the lowest position of the rack first and proceed to mount the rest of the devices from bottom to top.**

Two Mounting Rails Procedure

To mount the device on four posts in a rack using a two-rail kit:

1. Attach the ESD grounding strap to your bare wrist and to a site ESD point.

2. With two mounting screws—and cage nuts and washers if your rack requires them—attach one of the rear installation blades to the rear of the rack at the point where you want to mount the device. Tighten the screws. The blade helps support the rear of the chassis. You install the second rear installation blade after securing both front mounting brackets. See Figure 197 on page 477.

 Copyright © 2018, Juniper Networks, Inc.

Figure 197: Installing an Installation Blade in a Rack

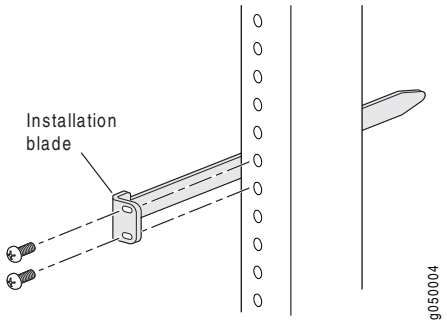

3. Grasp both sides of the device, lift it, and position it in the rack so that the blade receptacle at the rear of the chassis catches and slides onto the installation blade. See Figure 198 on page 477.

TIP: If someone is assisting you, have one person stand at the rear of the rack where the installation blade is installed, to help guide the device onto the installation blade.

Figure 198: Mounting the QFX3500 Device on Four Posts in a Rack Using a Two-Rail Kit

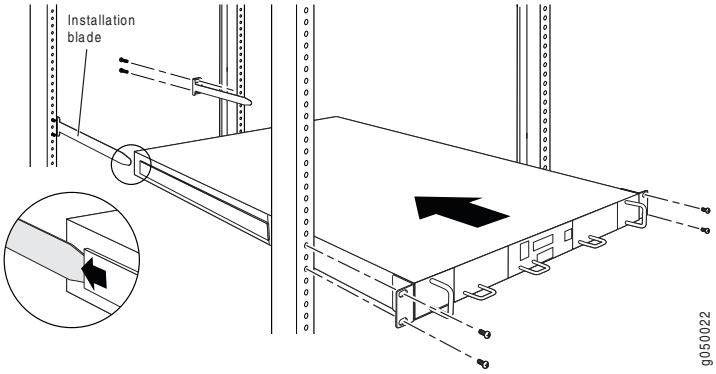

4. Align the holes in the front brackets on the chassis with the holes in the rack. Ensure that the chassis is level.

5. With four mounting screws—and cage nuts and washers if your rack requires them—secure the front of the device to the rack. Insert the first screw on the opposite corner from the rear installation blade you installed. Tighten the screws.

Copyright © 2018, Juniper Networks, Inc.

6. Ensure that the device chassis is level by verifying that all the screws on the front of the rack are aligned with the screws at the back of the rack.

7. With two mounting screws—and cage nuts and washers if your rack requires them—slide the second rear mounting blade into the blade receptacle on the chassis, and secure it to the rear of the rack by tightening the screws. You might need to loosen and adjust the first mounting blade to install the second blade.

Four Mounting Rails Procedure

To mount the device on four posts in a rack using a four -rail kit:

1. Attach the ESD grounding strap to your bare wrist and to a site ESD point.

2. Decide whether the management end of the device or the ports are to be placed at the front of the rack.

3. Align the holes in the mounting rail with the button fasteners on the side of the device and slide the holes over the fasteners to click into place. See Figure 171 on page 438 to see the proper alignment.

Figure 199: Attaching a Mounting Rail to the QFX3500

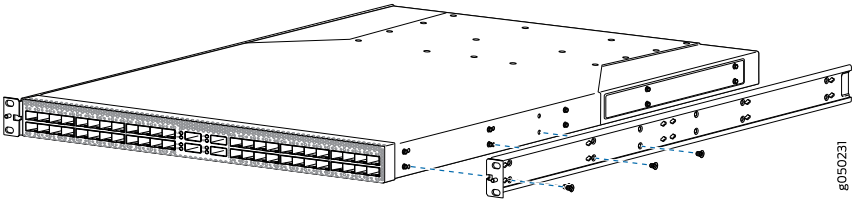

4. With three mounting screws—and cage nuts and washers if your rack requires them—attach the mounting rail to the device. Tighten the screws.

5. Repeats steps 3 and 4 on the opposite side of the device. One end of the device now has front facing mounting holes, the other end none.

6. With two mounting screws—and cage nuts and washers if your rack requires them—attach one of the rear installation blades to the rear of the rack at the point where you want to mount the device. Tighten the screws. The blade helps support the rear of the chassis. You install the second rear installation blade after securing both front mounting brackets. See Figure 197 on page 477 for detail on installing the rear blade.

7. Grasp both sides of the device, lift it, and position it in the rack so that the blade receptacle at the rear of the chassis catches and slides onto the installation blade. See Figure 174 on page 439.

Copyright © 2018, Juniper Networks, Inc.

Figure 200: Slide Mounting Rail onto the Rear Mounting Blade

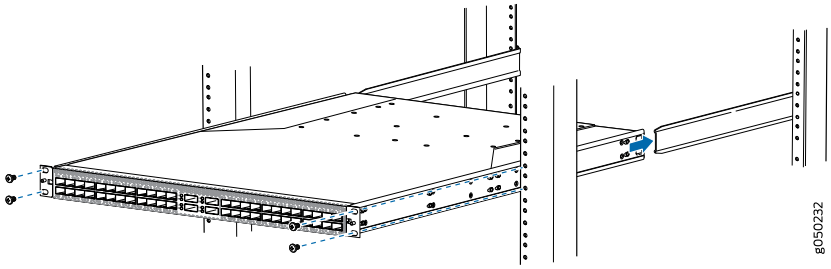

8. Align the holes in the mounting brackets with the holes in the rack. Ensure that the chassis is level.

9. With four front mounting screws–and cage nuts and washers if your rack requires them–attach the mounting bracket to the rack. Insert the first screw on the opposite corner from the mounting blade. Tighten the screws.

10. Ensure that the switch chassis is level by verifying that the screws on the front of the rack are aligned with the screws at the back of the rack.

11. With two mounting screws—and cage nuts and washers if your rack requires them—slide the second rear mounting blade into the blade receptacle on the mounting blade, and secure it to the rear of the rack by tightening the screws. You might need to loosen and adjust the other mounting blade to install the second blade.

Related Documentation

- Rack-Mounting and Cabinet-Mounting Warnings on page 343
- Connecting AC Power to a QFX3500, QFX3600, or QFX3600-I Device on page 463
- *Configuring a QFX3500 Device as a Standalone Switch*

Connecting Earth Ground to a QFX3500 Device

To meet safety and electromagnetic interference (EMI) requirements and to ensure proper operation, you must connect the QFX3500 device to earth ground before you connect it to power.

For installations that require a separate grounding conductor to the chassis, you must attach a protective earthing terminal bracket on the QFX3500 device left front mounting bracket to connect to the earth ground (see Figure 201 on page 481).

Before you connect earth ground to the protective earthing terminal of a QFX3500 device, ensure that a licensed electrician has attached an appropriate grounding lug to the grounding cable.

CAUTION: **Using a grounding cable with an incorrectly attached lug can damage the device.**

NOTE: **Mount your device in the rack or cabinet before attaching the grounding lug to the device. See** "Mounting a QFX3500 Device in a Rack or Cabinet" on page 475.

Ensure that you have the following parts and tools available:

- Protective earthing terminal bracket—This L-shaped bracket attaches to a post on the QFX3500 device left front mounting bracket, providing a protective earthing terminal for the device. This bracket is provided in the accessory kit.
- Grounding cable for your QFX3500 device—The grounding cable must be 14 AWG (2 mm^2), minimum 90° C wire, or as permitted by the local code.
- Grounding lug for your grounding cable—The grounding lug required is a Panduit LCD10-10A-L or equivalent. This grounding lug is provided in the accessory kit.
- Three M4 hex nuts with integrated washers—One nut and washer are required to secure the grounding lug bracket to the left front mounting bracket, and two nuts and washers are used to secure the grounding lug to the grounding lug bracket protective earthing terminal. Four nuts are provided in the accessory kit.
- 7-mm wrench or socket with driver to attach all three nuts.

An AC-powered QFX3500 device chassis gains additional grounding when you plug the power supply in the device into a grounded AC power outlet by using an AC power cord appropriate for your geographical location. See "AC Power Cord Specifications for a QFX Series Device" on page 292.

To connect earth ground to a QFX3500 device:

Copyright © 2018, Juniper Networks, Inc.

1. Secure the provided protective earthing terminal bracket to the threaded post on the QFX3500 device left front mounting bracket with the nut provided. The posts on the protective earthing terminal bracket should point to the left. See Figure 201 on page 481.

Figure 201: Connecting a Grounding Cable to a QFX3500 Device

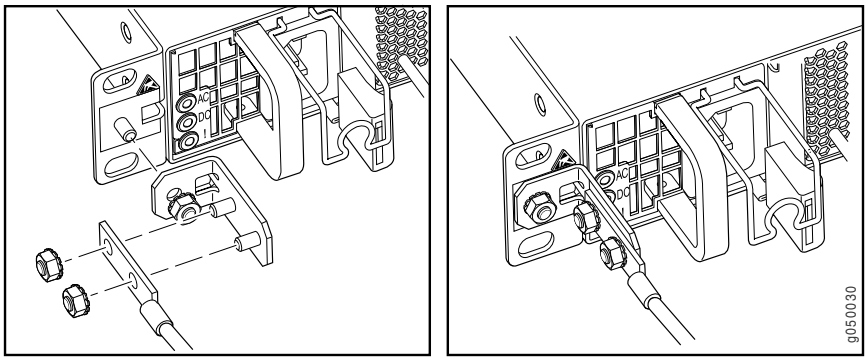

2. Connect one end of the grounding cable to a proper earth ground, such as the rack in which the device is mounted.

3. Place the grounding lug attached to the grounding cable over the protective earthing terminal on the protective earthing terminal bracket.

4. Secure the grounding lug to the protective earthing terminal with two nuts.

5. Dress the grounding cable and ensure that it does not touch or block access to other device components and that it does not drape where people could trip over it.

Related Documentation

- General Safety Guidelines and Warnings on page 329
- Grounded Equipment Warning on page 347
- Connecting AC Power to a QFX3500, QFX3600, or QFX3600-I Device on page 463
- Connecting DC Power to a QFX3500, QFX3600, or QFX3600-I Device on page 466

Connecting AC Power to a QFX3500, QFX3600, or QFX3600-I Device

The QFX3500, QFX3600, and QFX3600-I devices are shipped from the factory with two 650 W power supplies pre-installed. Each power supply is a hot-removable and hot-insertable field-replaceable unit (FRU) when the second power supply is installed and running. You can install replacement power supplies without powering off the device or disrupting the switching function.

Ensure that you have a power cord appropriate for your geographical location available to connect AC power to the device.

Before you begin connecting AC power to the device:

- Ensure that you have taken the necessary precautions to prevent electrostatic discharge (ESD) damage (see "Prevention of Electrostatic Discharge Damage" on page 360).
- Ensure that you have connected the device chassis to earth ground.

CAUTION: Before you connect power to the device, a licensed electrician must attach a cable lug to the grounding and power cables that you supply. A cable with an incorrectly attached lug can damage the device (for example, by causing a short circuit).

To meet safety and electromagnetic interference (EMI) requirements and to ensure proper operation, you must connect the chassis to earth ground before you connect it to power. For installations that require a separate grounding conductor to the chassis, use the protective earthing terminal on the device chassis to connect to the earth ground. For instructions on connecting earth ground, see "Connecting Earth Ground to a QFX3500 Device" on page 480 or "Connecting Earth Ground to QFX3600 or QFX3600-I Devices" on page 462. The device gains additional grounding when you plug the power supply in the device into a grounded AC power outlet by using the AC power cord appropriate for your geographical location (see "AC Power Cord Specifications for a QFX Series Device" on page 292).

- Install the power supply in the chassis. For instructions on installing a power supply in a QFX3500 device, see "Installing a Power Supply in a QFX3500 Device" on page 646. For instructions on installing a power supply in a QFX3600 or QFX3600-I device, see "Installing a Power Supply in a QFX3600 or QFX3600-I Device" on page 660.

NOTE: Each power supply must be connected to a dedicated power source outlet.

To connect AC power to a QFX3500, QFX3600, or QFX3600-I device:

1. Attach the grounding strap to your bare wrist and to a site ESD point.

2. Ensure that the power supplies are fully inserted in the chassis and the latches are secure. If only one power supply is installed, ensure a that blank cover panel is installed over the second power supply slot.

3. Locate the power cord or cords shipped with the device; the cords have plugs appropriate for your geographical location. See "AC Power Cord Specifications for a QFX Series Device" on page 292.

WARNING: Ensure that the power cord does not block access to device components or drape where people can trip on it.

Copyright © 2018, Juniper Networks, Inc.

4. Connect each power supply to the power sources. Insert the coupler end of the power cord into the AC power cord inlet on the AC power supply faceplate.

5. Push the power cord retainer onto the power cord (see Figure 191 on page 465 or Figure 192 on page 465).

Figure 202: Connecting an AC Power Cord to an AC Power Supply in a QFX3500 Device

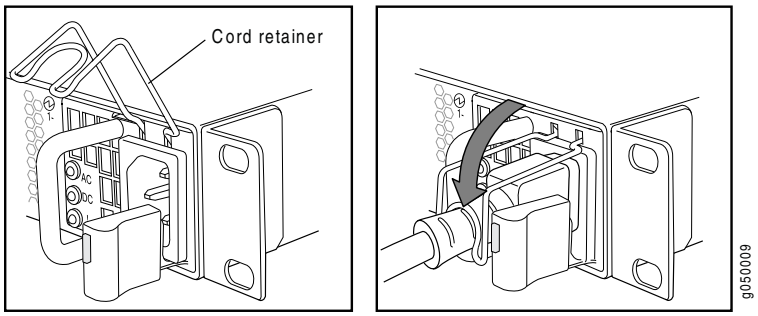

Figure 203: Connecting an AC Power Cord to an AC Power Supply in a QFX3600 or QFX3600-I Device

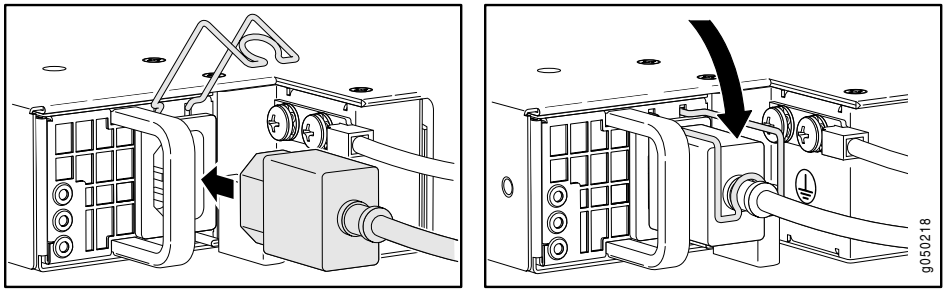

6. If the AC power source outlet has a power switch, set it to the OFF (O) position.

NOTE: **The device powers on as soon as power is provided to the power supply. There is no power switch on the device.**

7. Insert the power cord plug into an AC power source outlet.

8. If the AC power source outlet has a power switch, set it to the ON (|) position.

9. Verify that the AC and DC LEDs on each power supply are lit green.

   If the amber fault LED is lit, remove power from the power supply, and replace the power supply (see "Removing a Power Supply from a QFX3500 Device" on page 648 or "Removing a Power Supply from a QFX3600 or QFX3600-I Device" on page 658). Do not remove the power supply until you have a replacement power supply ready: the power supplies or a blank cover panel must be installed in the device to ensure proper airflow.

CAUTION: Replace a failed power supply with a blank panel or new power supply within 1 minute of removal to prevent chassis overheating.

Related Documentation

- AC Power Supply for a QFX3500, QFX3600, or QFX3600-I Device on page 110
- AC Power Supply LEDs on a QFX3500, QFX3600, or QFX3600-I Device on page 753

Connecting DC Power to a QFX3500, QFX3600, or QFX3600-I Device

The QFX3500, QFX3600, and QFX3600-I devices are shipped from the factory with two 650 W power supplies pre-installed. Each power supply is a hot-removable and hot-insertable field-replaceable unit (FRU) when the second power supply is installed and running. You can install replacement power supplies without powering off the device or disrupting the switching function.

WARNING: DC-powered QFX3500, QFX3600 and QFX3600-I devices are intended for installation only in a restricted access location.

NOTE: The battery returns of the DC power supply should be connected as an isolated DC return (DC-I).

Before you begin connecting DC power to the device:

- Ensure that you have taken the necessary precautions to prevent electrostatic discharge (ESD) damage (see "Prevention of Electrostatic Discharge Damage" on page 360).
- Ensure that you have connected the device chassis to earth ground.

CAUTION: Before you connect power to the device, a licensed electrician must attach a cable lug to the grounding and power cables that you supply. A cable with an incorrectly attached lug can damage the device (for example, by causing a short circuit).

To meet safety and electromagnetic interference (EMI) requirements and to ensure proper operation, you must connect the chassis to earth ground before you connect it to power. For installations that require a separate grounding conductor to the chassis, use the protective earthing terminal on the device chassis to connect to the earth ground. For instructions on connecting earth ground, see "Connecting Earth Ground to a QFX3500 Device" on page 480 or "Connecting Earth Ground to QFX3600 or QFX3600-I Devices" on page 462.

Copyright © 2018, Juniper Networks, Inc.

- Install the power supply in the chassis. For instructions on installing a power supply in a QFX3500 device, see "Installing a Power Supply in a QFX3500 Device" on page 646. For instructions on installing a power supply in a QFX3600 or QFX3600-I device, see "Installing a Power Supply in a QFX3600 or QFX3600-I Device" on page 660

Ensure that you have the following parts and tools available:

- DC power source cables (14–16 AWG) with ring lug (Molex 190700069 or equivalent) (not provided)
- Phillips (+) screwdriver, number 2 (not provided)
- Multimeter (not provided)

To connect DC power to a QFX3500, QFX3600 or QFX3600-I device:

1. Attach the grounding strap to your bare wrist and to a site ESD point.

2. Verify that the DC power cables are correctly labeled before making connections to the power supply. In a typical power distribution scheme where the return is connected to chassis ground at the battery plant, you can use a multimeter to verify the resistance of the –48V and RTN DC cables to chassis ground:
   - The cable with very low resistance (indicating a closed circuit) to chassis ground is positive (+) and will be installed on the V+ (return) DC power input terminal.
   - The cable with very high resistance (indicating an open circuit) to chassis ground is negative (–) and will be installed on the V– (input) DC power input terminal.

   CAUTION: **You must ensure that power connections maintain the proper polarity. The power source cables might be labeled (+) and (–) to indicate their polarity. There is no standard color coding for DC power cables. The color coding used by the external DC power source at your site determines the color coding for the leads on the power cables that attach to the DC power input terminals on each power supply.**

3. Ensure that the input circuit breaker is open so that the voltage across the DC power source cable leads is 0 V and that the cable leads do not become active while you are connecting DC power.

   NOTE: **The V+ terminals are referred to as +RTN, and V– terminals are referred to as –48 V in** "DC Power Wiring Sequence Warning" on page 367 **and** "DC Power Electrical Safety Guidelines" on page 364.

4. Ensure that the power supplies are fully inserted in the chassis.

5. Remove the terminal block cover. The terminal block cover is a piece of clear plastic that snaps into place over the terminal block (see Figure 193 on page 469).

6. Remove the screws on the terminals using the screwdriver. Save the screws.

   WARNING: **Ensure that the power cables do not block access to device components or drape where people can trip on them.**

7. Connect each power supply to the power sources. Secure power source cables to the power supplies by screwing the ring lugs attached to the cables to the appropriate terminals by using the screw from the terminals (see Figure 194 on page 469 and Figure 193 on page 469).

   CAUTION: **The DC power supply has four terminals labeled V+, V+, V–, and V– for connecting DC power source cables labeled positive (+) and negative (–). The V+ terminals are shunted internally together, as are the V- terminals. The same polarity terminal can be wired together from the same source to provide an additional current path in a higher power chassis. Do not connect the terminals to different sources. For example, connect –48 V from DC source feed A to the input terminals of one power supply and connect –48 V from feed B to the input terminals of the second power supply on the other side of the chassis. This configuration provides the commonly deployed A/B feed redundancy for the system.**

   a. Secure the ring lug of the positive (+) DC power source cable to the V+ terminal on the DC power supply.

   b. Secure the ring lug of the negative (–) DC power source cable to the V– terminal on the DC power supply.

   c. Tighten the screws on the power supply terminals until snug using the screwdriver. Do not overtighten—apply between 5 in-lb (0.56 Nm) and 6 in-lb (0.68 Nm) of torque to the screws.

Copyright © 2018, Juniper Networks, Inc.

Figure 204: DC Power Supply Faceplate for a QFX3500, QFX3600 or QFX3600-I Device

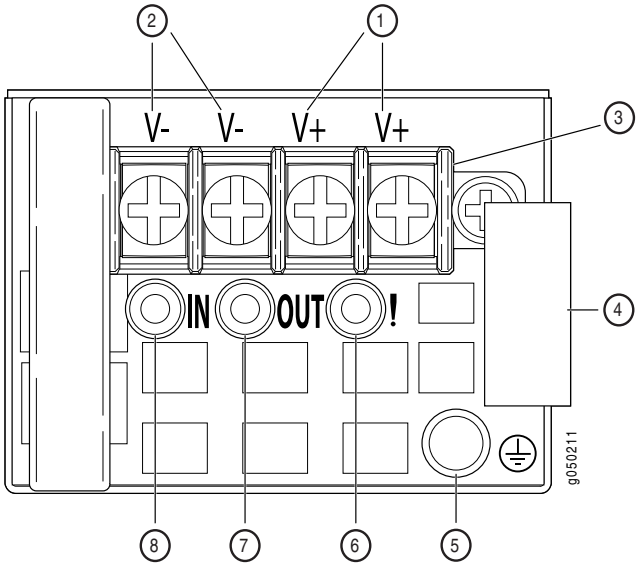

1—Shunt positive input terminals	5—ESD grounding point
2—Shunt negative input terminals	6—Fault LED
3—Terminal block	7—Output LED
4—Ejector lever	8—Input LED

CAUTION: The V+ terminals are shunted internally together, as are the V- terminals. The same polarity terminal can be wired together from the same source to provide an additional current path in a higher power chassis. Do not connect the terminals to different sources.

Figure 205: Securing Ring Lugs to the Terminals on the QFX3500, QFX3600 or QFX3600-I DC Power Supply

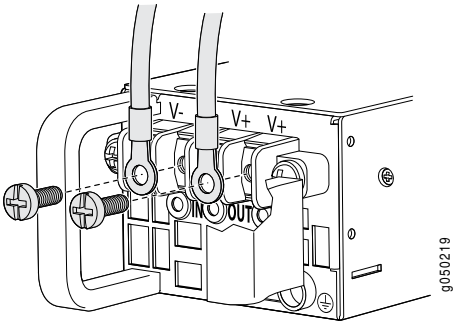

8. Replace the terminal block cover.

9. Close the input circuit breaker.

NOTE: The device powers on as soon as power is provided to the power supply. There is no power switch on the device.

10. Verify that the **IN** and **OUT** LEDs on the power supply are lit green and are on steadily.

Related Documentation

- DC Power Supply for a QFX3500, QFX3600, or QFX3600-I Device on page 112
- DC Power Supply LEDs on a QFX3500, QFX3600, or QFX3600-I Device on page 754

Connecting a QFX Series Device to a Management Console

The QFX Series has a console port with an RJ-45 connector. Use the console port to connect the device to a management console or to a console server.

Ensure that you have an RJ-45 to DB-9 rollover cable available. An RJ-45 cable with an RJ-45 to DB-9 adapter is provided with the device.

NOTE: If your laptop or PC does not have a DB-9 male connector pin and you want to connect your laptop or PC directly to the QFX Series, use a combination of the RJ-45 cable and RJ-45 to DB-9 adapter supplied with the device and a USB to DB-9 male adapter. You must provide the USB to DB-9 male adapter.

To connect the QFX Series to a management console (see Figure 151 on page 387 and Figure 152 on page 387):

1. Connect one end of the Ethernet cable to the console port (labeled **CON**).

2. Connect the other end of the Ethernet cable into the console server (see Figure 151 on page 387) or management console (see Figure 152 on page 387).

Figure 206: Connecting the QFX Series to a Management Console Through a Console Server

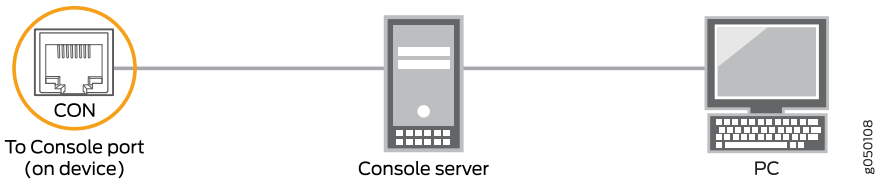

Copyright © 2018, Juniper Networks, Inc.

Figure 207: Connecting the QFX Series Directly to a Management Console

Related Documentation

- *Console Port Connector Pinouts for the QFX Series*
- *Configuring Console and Auxiliary Port Properties*

Copyright © 2018, Juniper Networks, Inc.

CHAPTER 34

Installing the Control Plane Network

- Installing and Connecting an EX4200 Switch on page 491
- Installing and Connecting an EX4300 Switch on page 492
- Cabling EX4200 or EX4300 Series Switches Virtual Chassis for a QFX3000-G QFabric System Control Plane on page 493

Installing and Connecting an EX4200 Switch

The EX4200 switch chassis is a rigid sheet-metal structure that houses the hardware components.

To install and connect an EX4200 switch:

1. Follow instructions in *Unpacking an EX4200 Switch*.
2. Install a power supply if it is not pre-installed; see "Installing a Power Supply in an EX4200 Switch" on page 697.
3. Install a fan tray if it is not pre-installed; see "Installing a Fan Tray in an EX4200 Switch" on page 705.
4. Mount the switch by following instructions appropriate for your site:
   - *Mounting an EX4200 Switch on Two Posts in a Rack or Cabinet* (using the mounting brackets provided)
   - *Mounting an EX4200 Switch on Four Posts in a Rack or Cabinet* (using the separately orderable four-post rack-mount kit)
   - *Mounting an EX4200 Switch in a Recessed Position in a Rack or Cabinet* (using the 2-in.-recess front brackets from the separately orderable four-post rack-mount kit)
   - *Mounting an EX4200 Switch on a Desk or Other Level Surface* (using the rubber feet provided)
   - *Mounting an EX4200 Switch on a Wall* (using the separately orderable wall-mount kit)
5. Follow instructions in "Connecting Earth Ground to an EX Series Switch" on page 175.

6. Follow instructions for connecting power as appropriate for your site:
   - *Connecting AC Power to an EX4200 Switch*
   - *Connecting DC Power to an EX4200 Switch*
7. Perform initial configuration of the switch by following instructions in *Connecting and Configuring an EX Series Switch (CLI Procedure)* or *Connecting and Configuring an EX Series Switch (J-Web Procedure)*.
8. Set the switch's management options by following the appropriate instructions:
   - *Connecting a Device to a Network for Out-of-Band Management*
   - *Connecting a Device to a Management Console by Using an RJ-45 Connector*

Related Documentation

- *Rack Requirements*
- *Cabinet Requirements*
- Clearance Requirements for Airflow and Hardware Maintenance for EX4200 Switches on page 254

Installing and Connecting an EX4300 Switch

To install and connect an EX4300 switch:

1. Follow instructions in *Unpacking an EX4300 Switch*.
2. Install a power supply if it is not preinstalled:
   - Installing an AC Power Supply in an EX4300 Switch on page 683
   - *Installing a DC Power Supply in an EX4300 Switch*
3. Install a fan module if it is not preinstalled; see "Installing a Fan Module in an EX4300 Switch" on page 691.
4. Mount the switch by following instructions appropriate for your site:
   - *Mounting an EX4300 Switch on Two Posts of a Rack or Cabinet* (by using the mounting brackets provided)
   - *Mounting an EX4300 Switch in a Recessed Position in a Rack or Cabinet* (by using the 2-in.-recess front brackets from the separately orderable four-post rack-mount kit)
   - *Mounting an EX4300 Switch on Four Posts of a Rack or Cabinet* (by using the separately orderable four-post rack-mount kit)
   - *Mounting an EX4300 Switch on a Wall* (by using the separately orderable wall-mount kit)
5. Follow instructions in "Connecting Earth Ground to an EX Series Switch" on page 175.

Copyright © 2018, Juniper Networks, Inc.

6. Follow instructions for connecting power as appropriate for your site:
   - *Connecting AC Power to an EX4300 Switch*
   - *Connecting DC Power to an EX4300 Switch*
7. Register your product by following instructions in *Registering Products—Mandatory for Validating SLAs*.
8. Perform initial configuration of the switch by following the instructions in *Connecting and Configuring an EX Series Switch (CLI Procedure)* or *Connecting and Configuring an EX Series Switch (J-Web Procedure)*.
9. Set the switch's management options by following the instructions in:
   - *Connecting a Device to a Network for Out-of-Band Management*
   - *Connecting a Device to a Management Console by Using an RJ-45 Connector*
   - *Connecting an EX Series Switch to a Management Console by Using the Mini-USB Type-B Console Port*

Related Documentation

- *Rack Requirements*
- *Cabinet Requirements*
- Clearance Requirements for Airflow and Hardware Maintenance for EX4300 Switches on page 251

Cabling EX4200 or EX4300 Series Switches Virtual Chassis for a QFX3000-G QFabric System Control Plane

A QFX3000-G QFabric system control plane and management network is formed by connecting the QFX Series devices in your network to two Virtual Chassis. In both a copper-based control plane and a fiber-based control plane, each Virtual Chassis is comprised of four EX4200-48T Series switches or EX4300-48P Series switches in a ring topology. You cannot mix the EX4200 with EX4300 Series switches in the same virtual chassis or in the same QFabric system.

The EX4200 has two dedicated 64-Gigabit Virtual Chassis Ports (VCP) that are used to cable the Virtual Chassis. These two ports are located on the rear, or field-replaceable unit (FRU) end of the EX4200. Likewise, the EX4300 has four 40-Gigabit Ethernet quad small form-factor pluggable plus (QSFP+) VCPs on the FRU end of the chassis.

Before you cable the four EX Series switches in a ring topology, install your EX4200 or EX4300 switches in a rack or cabinet. See "Installing and Connecting an EX4200 Switch" on page 491 or "Installing and Connecting an EX4300 Switch" on page 492.

Use Figure 208 on page 494, Figure 209 on page 494, Figure 210 on page 495, and Figure 211 on page 496 as guides for cabling a control plane Virtual Chassis.

Figure 208: Four Member EX4200 Virtual Chassis in a Ring Topology

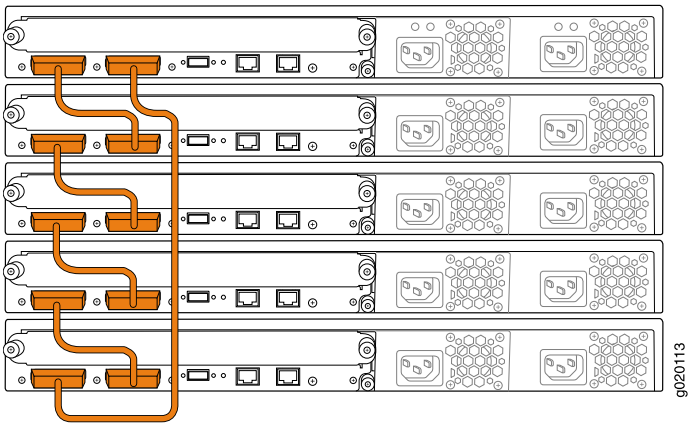

Figure 209: Four Member EX4300 Virtual Chassis in a Ring Topology Using Two QSFP+ Ports on Each Switch

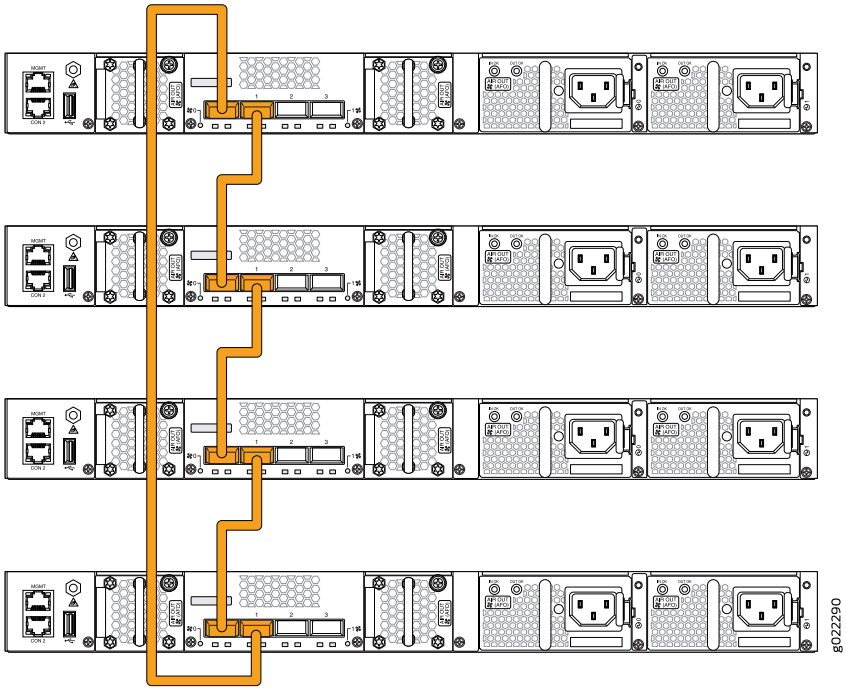

Copyright © 2018, Juniper Networks, Inc.

Figure 210: Four Member EX4300 Virtual Chassis in a Ring Topology Using Three QSFP+ Ports on Each Switch

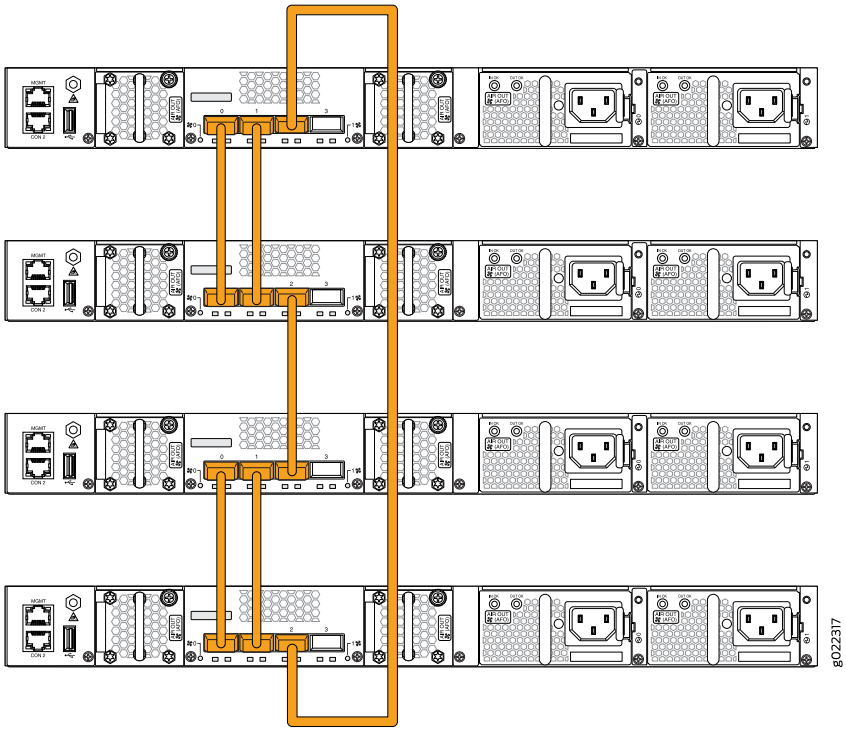

Figure 211: Four Member EX4300 Virtual Chassis in a Ring Topology Using Four QSFP+ Ports on Each Switch

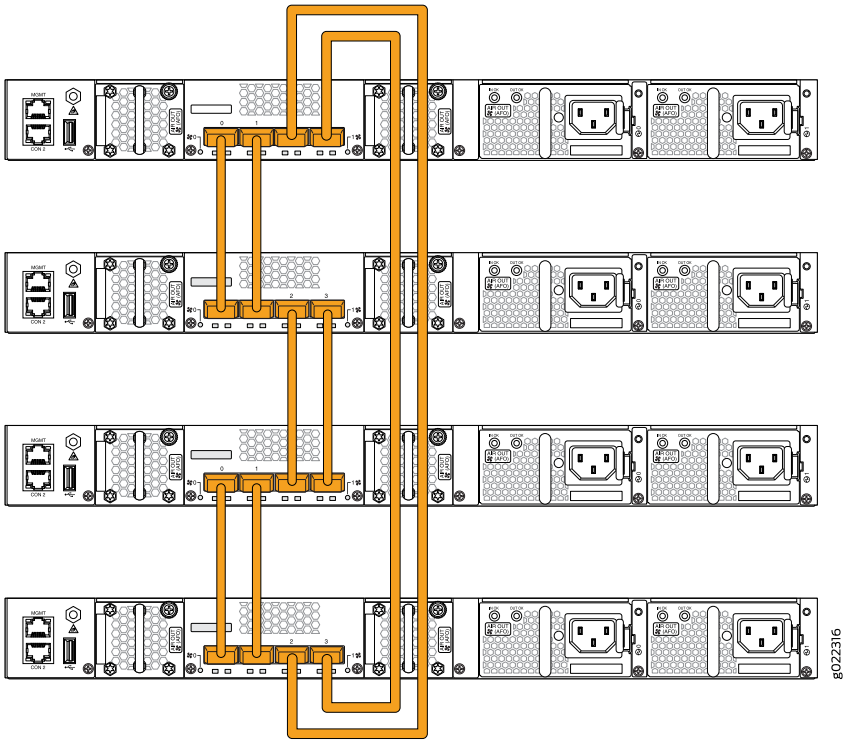

Related Documentation

- *Virtual Chassis Cabling Configuration Examples for EX4200 Switches*
- Installing and Connecting an EX4200 Switch on page 491
- Installing and Connecting an EX4300 Switch on page 492

Copyright © 2018, Juniper Networks, Inc.

CHAPTER 35

Cabling a Copper-Based Control Plane for the QFX3000-G QFabric System

- Interconnecting Two Virtual Chassis for Copper-Based QFX3000-G QFabric System Control Plane Redundancy on page 497
- Connecting QFX3100 Director Devices in a Director Group on page 500
- Connecting QFX3100 Director Devices to a Copper-Based QFX3000-G QFabric System Control Plane Network on page 502
- Connecting a QFX3100 Director Device to a Network for Out-of-Band Management on page 505
- Connecting a QFX3008-I Interconnect Device to a Copper-Based QFX3000-G QFabric System Control Plane Network on page 505
- Connecting a QFX5100 Node Device to a Copper-Based QFX3000-G QFabric System Control Plane Network on page 510
- Connecting a QFX3600 Node Device to a Copper-Based QFX3000-G QFabric System Control Plane Network on page 512
- Connecting a QFX3500 Node Device to a Copper-Based QFX3000-G QFabric System Control Plane Network on page 515

Interconnecting Two Virtual Chassis for Copper-Based QFX3000-G QFabric System Control Plane Redundancy

A QFX3000-G QFabric system control plane and management network is formed by connecting the QFX Series devices in your network to two Virtual Chassis. If you are creating a copper-based control plane network, you use four EX4200-48T or four EX4300-48P Ethernet switches in each Virtual Chassis. For redundancy and communication, you must connect the two Virtual Chassis using the 10-Gigabit Ethernet uplink module ports configured as a link aggregation group (LAG) (see Figure 212 on page 498).

Copyright © 2018, Juniper Networks, Inc.

Figure 212: QFX3000-G QFabric System Copper-Based Control Plane—Inter-Virtual Chassis LAG Connections

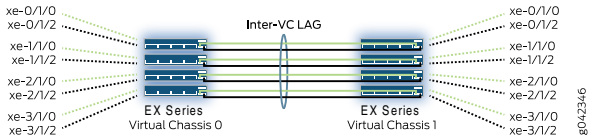

Before you begin to interconnect two Virtual Chassis for QFX3000-G QFabric system control plane redundancy:

- Install your QFabric system hardware (Director group, Interconnect devices, and Node devices). See "Installing and Connecting a QFX3100 Director Device" on page 377, "Installing and Connecting a QFX3008-I Interconnect Device" on page 389 "Installing and Connecting a QFX3600 or QFX3600-I Device" on page 453, and "Installing and Connecting a QFX3500 Device" on page 473.
- Install your EX4200 or EX4300 switches. See "Installing and Connecting an EX4200 Switch" on page 491 or "Installing and Connecting an EX4300 Switch" on page 492.
- Create two Virtual Chassis of four members each.
  - See "Cabling EX4200 or EX4300 Series Switches Virtual Chassis for a QFX3000-G QFabric System Control Plane" on page 493.
  - See *Configuring an EX4200, EX4500, or EX4550 Virtual Chassis (CLI Procedure)* or *Configuring an EX2300, EX3400, or EX4300 Virtual Chassis*.
- Ensure that you have installed a 10-Gigabit Ethernet SFP+ transceivers in ports **0** and **2** on each Virtual Chassis member uplink module (see *Installing a Transceiver*). EX4200 uplink modules only support SFP+ transceivers installed in ports **0** and **2**. EX4300 uplink modules support SFP+ transceivers installed in all uplink module ports. For a list of supported transceivers, see *Pluggable Transceivers Supported on EX4200 Switches* and *Pluggable Transceivers Supported on EX4300 Switches*.

  Instead of using optical transceivers, you can use 10-Gigabit Ethernet SFP+ direct-attach (DAC) cables. For a list of supported DAC cables, see *SFP+ Direct Attach Copper Cables for EX Series Switches*. The procedure below assumes you are using optical transceivers, but the port mappings in Table 141 on page 499 also apply to DAC cables.
- Ensure that you have appropriate fiber-optic cables (see *Pluggable Transceivers Supported on EX4200 Switches* or *Pluggable Transceivers Supported on EX4300 Switches*).
- Ensure that you have taken the necessary precautions for safe handling of lasers (see *Laser and LED Safety Guidelines and Warnings*).
- Use Table 141 on page 499 to determine the copper-based control plane Virtual Chassis-to-Virtual Chassis port mappings. Specific ports have been reserved on the Virtual Chassis to connect to each of the QFabric system device types. Such design simplifies installation and facilitates timely deployment of a QFabric system. It also permits the use of a standard Virtual Chassis configuration (see *Example: Configuring the Virtual Chassis for a Copper-Based QFX3000-G QFabric System Control Plane*.

Copyright © 2018, Juniper Networks, Inc.

Table 141: Virtual Chassis-to-Virtual Chassis Copper-Based Control Plane Port Assignments

Member 0	Member 1	Member 2	Member 3
Connect **xe-0/1/0** on EX0 to **xe-0/1/0** on EX1	Connect **xe-1/1/0** on EX0 to **xe-1/1/0** on EX1	Connect **xe-2/1/0** on EX0 to **xe-2/1/0** on EX1	Connect **xe-3/1/0** on EX0 to **xe-3/1/0** on EX1
Connect **xe-0/1/2** on EX0 to **xe-0/1/2** on EX1	Connect **xe-1/1/2** on EX0 to **xe-1/1/2** on EX1	Connect **xe-2/1/2** on EX0 to **xe-2/1/2** on EX1	Connect **xe-3/1/2** on EX0 to **xe-3/1/2** on EX1

To interconnect two Virtual Chassis for QFabric system control plane redundancy (see Figure 212 on page 498 and Table 141 on page 499):

WARNING: **Do not look directly into a fiber-optic transceiver or into the ends of fiber-optic cables. Fiber-optic transceivers and fiber-optic cables connected to transceivers emit laser light that can damage your eyes.**

1. If the fiber-optic cable connector is covered by a rubber safety cap, remove the cap. Save the cap.

2. Remove the rubber safety cap from the SFP+ optical transceiver in port **0** on member **0** of the first Virtual Chassis. Save the cap.

3. Insert the cable connector into the optical transceiver (see Figure 213 on page 499).

Figure 213: Connecting a Fiber-Optic Cable to an Optical Transceiver Installed in an EX Series Switch

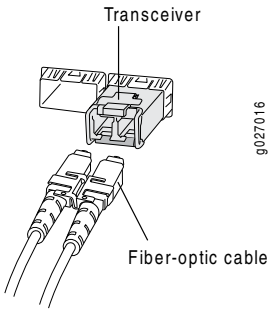

4. If the connector at the other end of the fiber-optic cable is covered by a rubber safety cap, remove the cap. Save the cap.

5. Remove the rubber safety cap from the SFP+ optical transceiver in port **0** on member **0** of the *second* Virtual Chassis. Save the cap.

6. Insert the cable connector into the optical transceiver.

Copyright © 2018, Juniper Networks, Inc.

7. Repeat Step 1 through Step 6 for each uplink module port, following the port assignments in Table 141 on page 499.

8. Secure the cables so that they are not supporting their own weight. Place excess cable out of the way in a neatly coiled loop. Placing fasteners on a loop helps cables maintain their shape.

CAUTION: Do not bend fiber-optic cables beyond their minimum bend radius. An arc smaller than a few inches in diameter can damage the cables and cause problems that are difficult to diagnose.

Do not let fiber-optic cables hang free from the connector. Do not allow fastened loops of cables to dangle, which stresses the cables at the fastening point.

Related Documentation

- Installing and Connecting a QFX3100 Director Device on page 377

Connecting QFX3100 Director Devices in a Director Group

A QFabric system requires two QFX3100 Director devices interconnected as a QFX3100 Director *group* (see Figure 214 on page 500 through Figure 216 on page 501).

Figure 214: QFX3100 Director Group Control Plane Connections for QFX3000-G QFabric System Using Copper-Based Control Plane

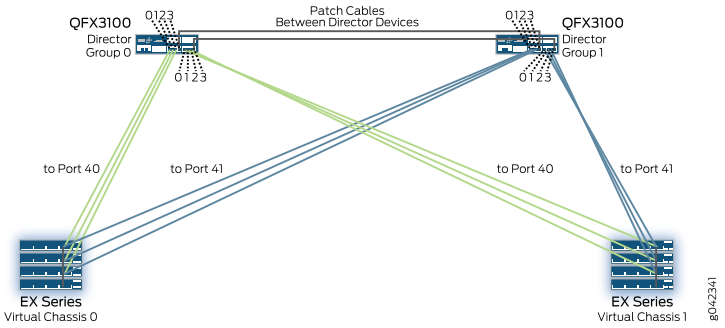

Copyright © 2018, Juniper Networks, Inc.

Figure 215: QFX3100 Director Group Control Plane Connections for QFX3000-G QFabric System Using Fiber-Based Control Plane

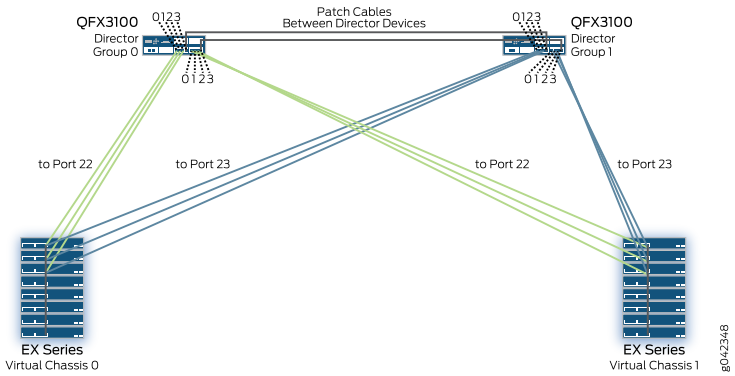

Figure 216: QFX3100 Director Group Control Plane Connections for QFX3000-M QFabric System

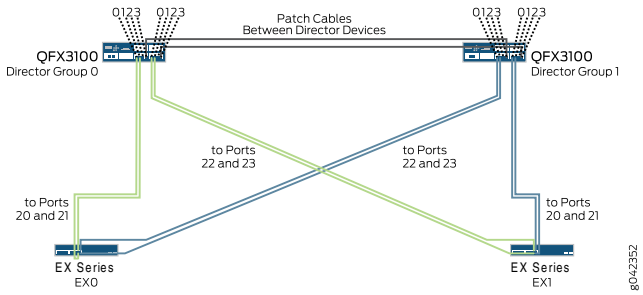

The second QFX3100 Director device provides redundancy for the control plane and management network.

Before you begin to connect QFX3100 Director devices in a Director group:

- Install your QFabric system hardware (Director group, Interconnect devices, and Node devices). For more information, see "Installing and Connecting a QFX3100 Director Device" on page 377, "Installing and Connecting a QFX3008-I Interconnect Device" on page 389, "Installing and Connecting a QFX3600 or QFX3600-I Device" on page 453, and "Installing and Connecting a QFX3500 Device" on page 473.

  NOTE: **For a copper-based QFX3000-M QFabric system control plane network, use QFX3100 Director devices with RJ-45 network modules installed. For a fiber-based control plane network, use QFX3100 Director devices with SFP network modules installed.**

- Ensure that you have appropriate transceivers and cables available. For cable specifications, see "Cable Specifications for Copper-Based Control Plane Connections

for the QFabric System" on page 265 and "Determining Transceiver Support for QFabric Systems" on page 258.

CAUTION: The redundant patch cables interconnecting the Director devices are critical links required for the operation of the Director group. The two inter-Director device links must remain connected when the Director devices are online. Although a single inter-Director device can lose a link and regain its connection, the loss of both inter-Director device links causes one of the Director devices to become isolated from the Director group. In Figure 214 on page 500 through Figure 216 on page 501, these redundant patch cables are shown in red and connect port **3** to port **3**.

To connect QFX3100 Director devices in a Director group (see Figure 214 on page 500):

WARNING: Do not look directly into a fiber-optic transceiver or into the ends of fiber-optic cables. Fiber-optic transceivers and fiber-optic cables connected to transceivers emit laser light that can damage your eyes.

1. Connect the port labeled **3** on the first network module on one of the Director devices to the corresponding port (labeled **3**) on the first network module on the second Director device.

2. Connect the port labeled **3** on the *second* network module on one of the Director devices to the corresponding port (labeled **3**) on the *second* network module on the second Director device.

Related Documentation

- Connecting QFX3100 Director Devices to a Copper-Based QFX3000-G QFabric System Control Plane Network on page 502
- Connecting QFX3100 Director Devices to a Fiber-Based QFX3000-G QFabric System Control Plane Network on page 524
- *Connecting QFX3100 Director Devices to a Copper-Based QFX3000-M QFabric System Control Plane Network*
- *Connecting QFX3100 Director Devices to a Fiber-Based QFX3000-M QFabric System Control Plane Network*
- Troubleshooting QFX3100 Director Device Isolation on page 859

Connecting QFX3100 Director Devices to a Copper-Based QFX3000-G QFabric System Control Plane Network

A QFX3000-G QFabric system control plane and management network is formed by connecting the QFX Series devices in your network to two Virtual Chassis composed of four EX4200 or four EX4300 switches. If you are creating a copper-based control plane

 Copyright © 2018, Juniper Networks, Inc.

network, you use four EX4200-48T or four EX4300-48T Ethernet switches in each Virtual Chassis. QFX3100 Director devices have two RJ-45 or SFP network modules. Use the RJ-45 network module ports to connect the QFX3100 Director group to each Virtual Chassis (see Figure 217 on page 503).

Figure 217: QFX3100 Director Group to Virtual Chassis Connections for QFX3000-G QFabric System

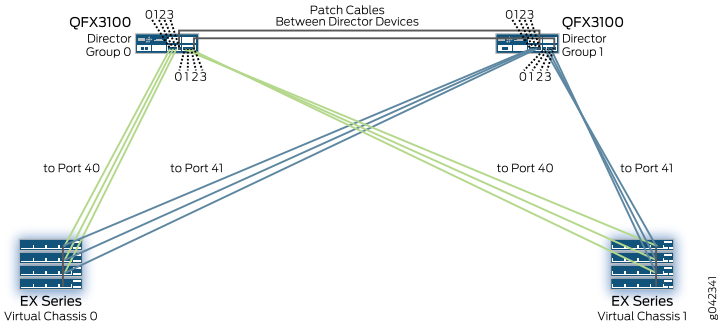

Use the following QFX3100 Director devices and EX Series switches for a copper-based QFX3000-G QFabric system control plane network:

- QFX3100 Director devices with RJ-45 network modules installed. Each RJ-45 network module provides four RJ-45 ports labeled **0** through **3**.
- Virtual Chassis EX4200-48T or EX4300-48T switches with an SFP+ uplink module installed.

Specific ports have been reserved on the Virtual Chassis to connect to each of the QFabric system device types. Such design simplifies installation and facilitates timely deployment of a QFabric system. It also permits the use of a standard Virtual Chassis configuration (see *Example: Configuring the Virtual Chassis for a Copper-Based QFX3000-G QFabric System Control Plane*).

Before you begin to connect a QFX3100 Director device to the copper-based QFX3000-G control plane network:

- Install your QFabric system hardware (Director group, Interconnect devices, and Node devices). See "Installing and Connecting a QFX3100 Director Device" on page 377, "Installing and Connecting a QFX3008-I Interconnect Device" on page 389, "Installing and Connecting a QFX3600 or QFX3600-I Device" on page 453, and "Installing and Connecting a QFX3500 Device" on page 473.
- Install your Virtual Chassis hardware (EX4200 or EX4300 switches). See "Installing and Connecting an EX4200 Switch" on page 491 or "Installing and Connecting an EX4300 Switch" on page 492.
- Create two Virtual Chassis switches of four members each.
  - See "Cabling EX4200 or EX4300 Series Switches Virtual Chassis for a QFX3000-G QFabric System Control Plane" on page 493.

  - See *Configuring an EX4200, EX4500, or EX4550 Virtual Chassis (CLI Procedure)* or *Configuring an EX2300, EX3400, or EX4300 Virtual Chassis*.

- Interconnect the two Virtual Chassis switches using the 10-Gigabit Ethernet SFP+ uplink ports. See "Interconnecting Two Virtual Chassis for Copper-Based QFX3000-G QFabric System Control Plane Redundancy" on page 497.
- Connect the two QFX3100 Director devices to create a Director group. See "Connecting QFX3100 Director Devices in a Director Group" on page 500.
- Ensure that you have enough RJ-45 patch cables available, and ensure that the cables meet the specifications described in "Cable Specifications for Copper-Based Control Plane Connections for the QFabric System" on page 265.

To connect a QFX3100 Director device to the QFX3000-G QFabric control plane network (see Figure 217 on page 503):

1. Connect both network modules on the first Director device (labeled **DG0** in Figure 217 on page 503) to the two Virtual Chassis (labeled **VC0** and **VC1** in Figure 217 on page 503). You connect the first three ports (labeled **0** through **2**) on the first network module to the first Virtual Chassis (**VC0**. You connect the first three ports on the second network module (also labeled **0** through **2**) to the second Virtual Chassis (**VC0VC1**). The ports used are the same on each Virtual Chassis.

Table 142: QFX3100 Director Device-to-Virtual Chassis Control Plane Port Assignments for DG0

Network Module Port 0	Network Module Port 1	Network Module Port 2	Network Module Port 3
Virtual Chassis port **ge-0/0/40**	Virtual Chassis port **ge-1/0/40**	Virtual Chassis port **ge-2/0/40**	Connect this port to the identical port on the other Director device. See "Connecting QFX3100 Director Devices in a Director Group" on page 500 .

2. Connect both network modules on the *second* Director device (labeled **DG1** in Figure 217 on page 503) to the two Virtual Chassis (labeled **VC0** and **VC1** in Figure 217 on page 503). You connect the first three ports on the first network module to the first Virtual Chassis (**VC0**). You connect the first three ports on the second network module to the second Virtual Chassis (**VC1**). The ports used are the same on each Virtual Chassis.

Table 143: Second QFX3100 Director Device-to-Virtual Chassis Control Plane Port Assignments for DG1

Network Module Port 0	Network Module Port 1	Network Module Port 2	Network Module Port 3
Virtual Chassis port **ge-0/0/41**	Virtual Chassis port **ge-1/0/41**	Virtual Chassis port **ge-2/0/41**	Connect this port to the identical port on the other Director device. See "Connecting QFX3100 Director Devices in a Director Group" on page 500 .

 Copyright © 2018, Juniper Networks, Inc.

Related Documentation

- Installing and Connecting a QFX3100 Director Device on page 377

Connecting a QFX3100 Director Device to a Network for Out-of-Band Management

Use the management port on your QFX3100 Director device to connect each Director device in your Director group to your out-of-band management network.

NOTE: You cannot use the management port to perform the initial configuration of the QFX3100 Director device. You must configure the management port before you can successfully connect to the QFX3100 Director device using this port. See "Performing the QFabric System Initial Setup on a QFX3100 Director Group" on page 551.

Ensure that you have an RJ-45 patch cable available.

To connect a QFX3100 Director device to a network for out-of-band management:

1. Connect one end of the Ethernet cable to the management port (labeled **MGMT** on the Director device front panel).
2. Connect the other end of the Ethernet cable to your management device or management network.
3. Repeat these steps for the second Director device.

Related Documentation

- Management Port Connector Pinouts for the QFX Series on page 260
- Cable Specifications for Console and Management Connections for the QFX Series on page 268
- Connecting QFX3100 Director Devices to a Copper-Based QFX3000-G QFabric System Control Plane Network on page 502
- *Connecting QFX3100 Director Devices to a Copper-Based QFX3000-M QFabric System Control Plane Network*
- *Connecting QFX3100 Director Devices to a Fiber-Based QFX3000-M QFabric System Control Plane Network*
- Connecting a QFX Series Device to a Management Console on page 386

Connecting a QFX3008-I Interconnect Device to a Copper-Based QFX3000-G QFabric System Control Plane Network

A QFX3000-G QFabric system control plane and management network is formed by connecting the QFabric system devices in your network to two Virtual Chassis composed of four EX4200 switches or four EX4300 each. QFX3008-I Interconnect Devices have

four small form factor pluggable plus (SFP+) management ports on each Control Board. Use the SFP+ management ports to connect the QFX3008-I Interconnect Devices to each Virtual Chassis (see Figure 218 on page 506.

Figure 218: QFX3008-I Interconnect Device Control Plane Connections

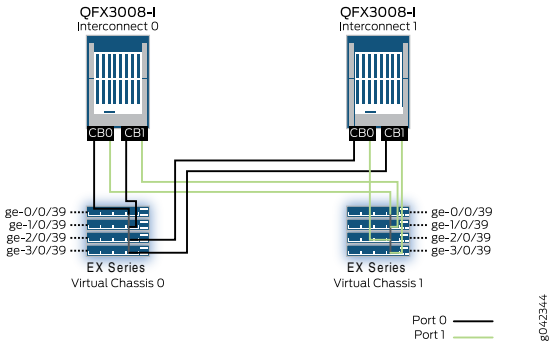

Specific ports have been reserved on the Virtual Chassis to connect to the Interconnect devices, Node devices, and QFX3100 Director devices in your QFabric system. Such design simplifies installation and facilitates timely deployment of a QFabric system. It also enables the use of a standard Virtual Chassis configuration (see *Example: Configuring the Virtual Chassis for a Copper-Based QFX3000-G QFabric System Control Plane*).

Before you begin to connect a QFX3008-I Interconnect Device to the copper-based QFX3000-G QFabric system control plane network:

- Install your QFabric system hardware (Director group, Interconnect devices, and Node devices). For more information, see "Installing and Connecting a QFX3100 Director Device" on page 377, "Installing and Connecting a QFX3008-I Interconnect Device" on page 389, "Installing and Connecting a QFX3600 or QFX3600-I Device" on page 453, and "Installing and Connecting a QFX3500 Device" on page 473.
- Install your Virtual Chassis hardware. For more information, see "Installing and Connecting an EX4200 Switch" on page 491 or "Installing and Connecting an EX4300 Switch" on page 492.
- Create two Virtual Chassis switches of four members each.
  - See "Cabling EX4200 or EX4300 Series Switches Virtual Chassis for a QFX3000-G QFabric System Control Plane" on page 493.
  - See *Configuring an EX4200, EX4500, or EX4550 Virtual Chassis (CLI Procedure)* or *Configuring an EX2300, EX3400, or EX4300 Virtual Chassis*.
- Interconnect the two Virtual Chassis switches using the 10-Gigabit Ethernet SFP+ uplink ports. For more information, see "Interconnecting Two Virtual Chassis for Copper-Based QFX3000-G QFabric System Control Plane Redundancy" on page 497.
- Ensure that 1000BASE-T SFP transceivers are installed in port **0** and port **1** on both Control Boards for each QFX3008-I Interconnect device (see "Installing a Transceiver in a QFX Series Device" on page 709). For a list of supported transceivers and required cables, see The Hardware Compatibility Tool.

Copyright © 2018, Juniper Networks, Inc.

- Ensure that you have installed 1-Gigabit Ethernet SFP transceivers in the ports you are using on each EX4200 or EX4300 switch (see *Installing a Transceiver*). For a list of supported transceivers, see The Hardware Compatibility Tool.
- Ensure that you have four RJ-45 patch cables available for each Interconnect device. For cable specifications, see "Cable Specifications for Copper-Based Control Plane Connections for the QFabric System" on page 265.
- Use Table 144 on page 507 to determine the QFX3008-I Interconnect device-to-Virtual Chassis port mappings. Specific ports have been reserved on the Virtual Chassis to connect to each of the QFX Series device types. Such design simplifies installation and facilitates timely deployment of a QFabric system.

NOTE: The two Control Boards in each Interconnect device are labeled **CB0** and **CB1** in Figure 218 on page 506 and Table 144 on page 507. Interconnect devices IC2 and IC3 are not shown in Figure 218 on page 506 and describe the port mappings for the optional third and fourth Interconnect devices

Table 144: Interconnect Device Port Mappings

Interconnect Device	Virtual Chassis VC0	Virtual Chassis VC1
IC0	• **CB0, port 0** to **ge-0/0/39** • **CB1, port 0** to **ge-1/0/39**	• **CB0, port 1** to **ge-0/0/39** • **CB1, port 1** to **ge-1/0/39**
IC1	• **CB0, port 0** to **ge-2/0/39** • **CB1, port 0** to **ge-3/0/39**	• **CB0, port 1** to **ge-2/0/39** • **CB1, port 1** to **ge-3/0/39**
IC2	• **CB0, port 0** to **ge-0/0/38** • **CB1, port 0** to **ge-1/0/38**	• **CB0, port 1** to **ge-0/0/38** • **CB1, port 1** to **ge-1/0/38**
IC3	• **CB0, port 0** to **ge-2/0/38** • **CB1, port 0** to **ge-3/0/38**	• **CB0, port 1** to **ge-2/0/38** • **CB1, port 1** to **ge-3/0/38**

Copyright © 2018, Juniper Networks, Inc.

To connect each QFX3008-I Interconnect Device to the QFX3000-G QFabric system control plane network (see Figure 218 on page 506:

1. Connect the first Interconnect device.

   a. Connect one end of the first RJ-45 patch cable to the first SFP management port (labeled **0**) on the first Control Board (labeled **CB 0**).

   b. Connect the other end of that cable to port **ge-0/0/39** on the first Virtual Chassis.

   c. Connect one end of the second RJ-45 patch cable to the second SFP management port (labeled **1**) on the first Control Board (labeled **CB 0**).

   d. Connect the other end of that cable to port **ge-0/0/39** on the *second* Virtual Chassis.

   e. Connect one end of the third RJ-45 patch cable to the first SFP management port (labeled **0**) on the second Control Board (labeled **CB 1**).

   f. Connect the other end of that cable to port **ge-1/0/39** on the first Virtual Chassis.

   g. Connect one end of the fourth RJ-45 patch cable to the second SFP management port (labeled **1**) on the second Control Board (labeled **CB 1**).

   h. Connect the other end of that cable to port **ge-1/0/39** on the *second* Virtual Chassis.

2. Connect the second Interconnect device.

   a. Connect one end of the first RJ-45 patch cable to the first SFP management port (labeled **0**) on the first Control Board (labeled **CB 0**).

   b. Connect the other end of that cable to port **ge-2/0/39** on the first Virtual Chassis.

   c. Connect one end of the second RJ-45 patch cable to the second SFP management port (labeled **1**) on the first Control Board (labeled **CB 0**).

   d. Connect the other end of that cable to port **ge-2/0/39** on the *second* Virtual Chassis.

   e. Connect one end of the third RJ-45 patch cable to the first SFP management port (labeled **0**) on the second Control Board (labeled **CB 1**).

   f. Connect the other end of that cable to port **ge-3/0/39** on the first Virtual Chassis.

   g. Connect one end of the fourth RJ-45 patch cable to the second SFP management port (labeled**1**) on the second Control Board (labeled **CB 1**).

 Copyright © 2018, Juniper Networks, Inc.

h. Connect the other end of that cable to port **ge-3/0/39** on the *second* Virtual Chassis.

3. (Optional) Connect the third Interconnect device.

   a. Connect one end of the first RJ-45 patch cable to the first SFP management port (labeled **0**) on the first Control Board (labeled **CB 0**).

   b. Connect the other end of that cable to port **ge-0/0/38** on the first Virtual Chassis.

   c. Connect one end of the second RJ-45 patch cable to the second SFP management port (labeled **1**) on the first Control Board (labeled **CB 0**).

   d. Connect the other end of that cable to port **ge-0/0/38** on the *second* Virtual Chassis.

   e. Connect one end of the third RJ-45 patch cable to the first SFP management port (labeled **0**) on the second Control Board (labeled **CB 1**).

   f. Connect the other end of that cable to port **ge-1/0/38** on the first Virtual Chassis.

   g. Connect one end of the fourth RJ-45 patch cable to the second SFP management port (labeled **1**) on the second Control Board (labeled **CB 1**).

   h. Connect the other end of that cable to port **ge-1/0/38** on the *second* Virtual Chassis.

4. (Optional) Connect the fourth Interconnect device.

   a. Connect one end of the first RJ-45 patch cable to the first SFP management port (labeled **0**) on the first Control Board (labeled **CB 0**).

   b. Connect the other end of that cable to port **ge-2/0/38** on the first Virtual Chassis.

   c. Connect one end of the second RJ-45 patch cable to the second SFP management port (labeled **1**) on the first Control Board (labeled **CB 0**).

   d. Connect the other end of that cable to port **ge-2/0/38** on the *second* Virtual Chassis.

   e. Connect one end of the third RJ-45 patch cable to the first SFP management port (labeled **0**) on the second Control Board (labeled **CB 1**).

   f. Connect the other end of that cable to port **ge-3/0/38** on the first Virtual Chassis.

   g. Connect one end of the fourth RJ-45 patch cable to the second SFP management port (labeled **1**) on the second Control Board (labeled **CB 1**).

h. Connect the other end of that cable to port **ge-3/0/38** on the *second* Virtual Chassis.

Related Documentation

- Connecting a QFX3500 Node Device to a Copper-Based QFX3000-G QFabric System Control Plane Network on page 515
- Connecting a QFX3500 Node Device to a QFX3008-I Interconnect Device on page 548
- Connecting QFX3100 Director Devices to a Copper-Based QFX3000-G QFabric System Control Plane Network on page 502
- Connecting QFX3100 Director Devices in a Director Group on page 500

Connecting a QFX5100 Node Device to a Copper-Based QFX3000-G QFabric System Control Plane Network

A QFX3000-G QFabric system control plane and management network is formed by connecting the QFX series devices in your network to two Virtual Chassis composed of four EX4200 or four EX4300 switches. If you are creating a copper-based control plane network, you use the four EX Series Ethernet switches in each Virtual Chassis. QFX5100-48S Node devices have an RJ-45 **C0** located under the **CON** port, and an SFP cage **C1** that can be used as a copper management port. Use the RJ-45 management port (labeled **C0** and the SFP management port **C1**) to connect the QFX5100 Node device to each Virtual Chassis. See Figure 219 on page 510 for a cabling example.

Figure 219: QFX5100 Node Device Control Plane Connections

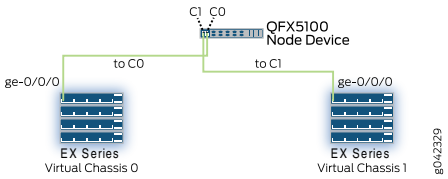

Use the following QFX5100 Node devices and EX4200 switches for a copper-based QFX3000-M QFabric system control plane network:

- QFX5100 Node devices with:
  - em0—RJ-45 (1000BASE-T) management Ethernet port (**C0**)
  - em1—SFP management Ethernet port (**C1**) cage (socket for 1 GbE copper SFP)
- Virtual Chassis of EX4200-48T or EX4300-48T switches with SFP+ uplink modules installed.

Before you begin to connect a QFX5100 Node device to the QFX3000-G QFabric system control plane network:

 Copyright © 2018, Juniper Networks, Inc.

- Install your QFabric system hardware (Director group, Interconnect devices, and Node devices). For more information, see "Installing and Connecting a QFX3100 Director Device" on page 377, "Installing and Connecting a QFX3008-I Interconnect Device" on page 389, "Installing and Connecting a QFX3600 or QFX3600-I Device" on page 453, "Installing and Connecting a QFX3500 Device" on page 473, and "Installing and Connecting a QFX5100 Device" on page 433.
- Install your Virtual Chassis hardware (EX4200 or EX4300 switches). For more information, see "Installing and Connecting an EX4200 Switch" on page 491or "Installing and Connecting an EX4300 Switch" on page 492.
- Create two Virtual Chassis of four members each.
  - See "Cabling EX4200 or EX4300 Series Switches Virtual Chassis for a QFX3000-G QFabric System Control Plane" on page 493.
  - See *Configuring an EX4200, EX4500, or EX4550 Virtual Chassis (CLI Procedure)* or *Configuring an EX2300, EX3400, or EX4300 Virtual Chassis*.
- Interconnect the two Virtual Chassis switches using the 10-Gigabit Ethernet SFP+ uplink ports. For more information, see "Interconnecting Two Virtual Chassis for Copper-Based QFX3000-G QFabric System Control Plane Redundancy" on page 497.
- Ensure that you have two RJ-45 patch cables available. For cable specifications, see "Cable Specifications for Copper-Based Control Plane Connections for the QFabric System" on page 265.
- Use Table 145 on page 511 to determine the QFX5100-48S Node device-to-Virtual Chassis port mappings. Specific ports have been reserved on the Virtual Chassis to connect to each of the QFabric system device types. Such design simplifies installation and facilitates timely deployment of a QFabric system. It also permits the use of a standard Virtual Chassis configuration (see *Example: Configuring the Virtual Chassis for a Copper-Based QFX3000-G QFabric System Control Plane*).

NOTE: **The numerical identifiers for each Node device below are not preassigned to the Node devices that are shipped to you. They represent the order in which you connect the Node devices. For example, the first Node device port (Node 0) is connected to port ge-0/0/0 on each Virtual Chassis.**

Table 145: QFX5100-48S Node Device-to-Virtual Chassis Copper-Based Control Plane Port Assignments

Member 0	Member 1	Member 2	Member 3
Node 0: ge-0/0/0	Node 32: ge-1/0/0	Node 64: ge-2/0/0	Node 96: ge-3/0/0
Node 1: ge-0/0/1	Node 33: ge-1/0/1	Node 65: ge-2/0/1	Node 97: ge-3/0/1
...	...	...	...
Node 30: ge-0/0/30	Node 62: ge-1/0/30	Node 94: ge-2/0/30	Node 126: ge-3/0/30

Copyright © 2018, Juniper Networks, Inc.

Table 145: QFX5100-48S Node Device-to-Virtual Chassis Copper-Based Control Plane Port Assignments (continued)

Member 0	Member 1	Member 2	Member 3
Node 31: ge-0/0/31	Node 63: ge-1/0/31	Node 95: ge-2/0/31	Node 127: ge-3/0/31

To connect a QFX5100 Node device to the QFX3000-G QFabric system control plane network):

1. Connect one end of the first RJ-45 patch cable to the management port (labeled **C0**) on the Node device management board.

2. Connect the other end of that cable to the appropriate member and port on the Virtual Chassis. See Table 145 on page 511.

3. Connect one end of the second RJ-45 patch cable to the second management port (labeled **C1**) on the Node device management board.

4. Connect the other end of that cable to the appropriate member and port on the *second* Virtual Chassis. This should be the same member number and port number that you connected to in Step 2. For example, if you connected the first cable to ge-0/0/0 on the first Virtual Chassis, you connect the second cable to ge-0/0/0 on the second Virtual Chassis.

5. Repeat this procedure for each Node device.

Related Documentation

- Connecting a QFX5100 Node Device to a QFX3008-I Interconnect Device on page 545
- Connecting a QFX3600 Node Device to a Copper-Based QFX3000-G QFabric System Control Plane Network on page 512

Connecting a QFX3600 Node Device to a Copper-Based QFX3000-G QFabric System Control Plane Network

A QFX3000-G QFabric system control plane and management network is formed by connecting the QFX series devices in your network to two Virtual Chassis composed of four EX4200 or four EX4300 switches each. QFX3600 Node devices have two management ports with RJ-45 connectors. Use the management ports to connect the QFX3600 Node device to each Virtual Chassis (see Figure 220 on page 513).

Copyright © 2018, Juniper Networks, Inc.

Figure 220: QFX3600 Node Device Control Plane Connections

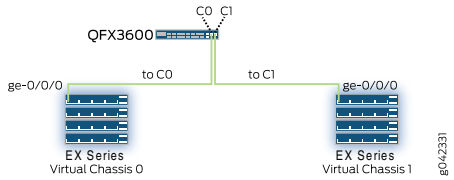

Before you begin to cable the QFX3000-G QFabric system control plane and management network:

- Install your QFabric system hardware (Director group, Interconnect devices, and Node devices). For more information, see "Installing and Connecting a QFX3100 Director Device" on page 377, "Installing and Connecting a QFX3008-I Interconnect Device" on page 389, "Installing and Connecting a QFX3600 or QFX3600-I Device" on page 453, and "Installing and Connecting a QFX3500 Device" on page 473.
- Install your Virtual Chassis hardware (EX4200 or EX4300 switches). For more information, see "Installing and Connecting an EX4200 Switch" on page 491or "Installing and Connecting an EX4300 Switch" on page 492.
- Create two Virtual Chassis of four members each.
  - See "Cabling EX4200 or EX4300 Series Switches Virtual Chassis for a QFX3000-G QFabric System Control Plane" on page 493.
  - See *Configuring an EX4200, EX4500, or EX4550 Virtual Chassis (CLI Procedure)* or *Configuring an EX2300, EX3400, or EX4300 Virtual Chassis*.
- Interconnect the two Virtual Chassis switches using the 10-Gigabit Ethernet SFP+ uplink ports. For more information, see "Interconnecting Two Virtual Chassis for Copper-Based QFX3000-G QFabric System Control Plane Redundancy" on page 497.
- Ensure that you have two RJ-45 patch cables available. For cable specifications, see "Cable Specifications for Copper-Based Control Plane Connections for the QFabric System" on page 265.
- Use Table 146 on page 514 to determine the QFX3600 Node device-to-Virtual Chassis port mappings. Specific ports have been reserved on the Virtual Chassis to connect to each of the QFabric system device types. Such design simplifies installation and facilitates timely deployment of a QFabric system. It also permits the use of a standard Virtual Chassis configuration (see *Example: Configuring the Virtual Chassis for a Copper-Based QFX3000-G QFabric System Control Plane*).

NOTE: **The numerical identifiers for each Node device below are not preassigned to the Node devices that are shipped to you. They represent the order in which you connect the Node devices. For example, the first Node device port you connect (Node 0) will be connected to port ge-0/0/0 on Virtual Chassis member 0.**

Table 146: QFX3600 Node Device-to-Virtual Chassis Control Plane Port Assignments

Member 0	Member 1	Member 2	Member 3
Node 0: **ge-0/0/0**	Node 32: **ge-1/0/0**	Node 64: **ge-2/0/0**	Node 96: **ge-3/0/0**
Node 1: **ge-0/0/1**	Node 33: **ge-1/0/1**	Node 65: **ge-2/0/1**	Node 97: **ge-3/0/1**
...	...	...	...
Node 30: **ge-0/0/30**	Node 62: **ge-1/0/30**	Node 94: **ge-2/0/30**	Node 126: **ge-3/0/30**
Node 31: **ge-0/0/31**	Node 63: **ge-1/0/31**	Node 95: **ge-2/0/31**	Node 127: **ge-3/0/31**

To connect a QFX3600 Node device to the QFX3000-G QFabric system control plane network (see Figure 220 on page 513):

1. Connect one end of the first RJ-45 patch cable to the first management port (labeled **0**) on the Node device front panel.

2. Connect the other end of that cable to the appropriate member and port on the Virtual Chassis. See Table 146 on page 514.

3. Connect one end of the second RJ-45 patch cable to the second management port (labeled **C1**) on the Node device front panel.

4. Connect the other end of that cable to the appropriate member and port on the *second* Virtual Chassis. This should be the same member number and port number that you connected to in Step 2. For example, if you connected the first cable to **ge-0/0/0** on Member **0** on the first Virtual Chassis, you connect the second cable to **ge-0/0/0** on Member **0** on the second Virtual Chassis.

5. Repeat this procedure for each Node device.

Related Documentation

- Connecting QFX3100 Director Devices to a Copper-Based QFX3000-G QFabric System Control Plane Network on page 502
- Connecting QFX3100 Director Devices in a Director Group on page 500
- Connecting a QFX3008-I Interconnect Device to a Copper-Based QFX3000-G QFabric System Control Plane Network on page 505
- Connecting a QFX3600 Node Device to a QFX3008-I Interconnect Device on page 547
- Connecting a QFX3500 Node Device to a Copper-Based QFX3000-G QFabric System Control Plane Network on page 515
- Connecting a QFX3500 Node Device to a QFX3008-I Interconnect Device on page 548

Copyright © 2018, Juniper Networks, Inc.

Connecting a QFX3500 Node Device to a Copper-Based QFX3000-G QFabric System Control Plane Network

A QFX3000-G QFabric system control plane and management network is formed by connecting the QFX series devices in your network to two Virtual Chassis composed of EX4200 or EX4300 switches. If you are creating a copper-based control plane network, you use four EX Series Ethernet switches in each Virtual Chassis. QFX3500 Node devices have an RJ-45 or SFP management board. Use the RJ-45 management ports (labeled **C0** and **C1**) to connect the QFX3500 Node device to each Virtual Chassis (see Figure 221 on page 515).

Figure 221: QFX3500 Node Device Control Plane Connections

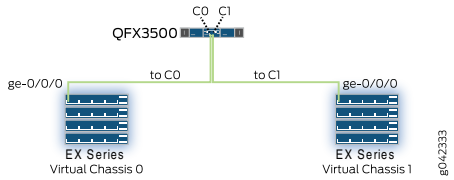

Use the following QFX3500 Node devices and EX4200 or EX4300 switches for a copper-based QFX3000-M QFabric system control plane network:

- QFX3500 Node devices with an RJ-45 management board installed. The RJ-45 management board provides two RJ-45 1-Gbps management ports labeled **C0** and **C1**.
- Virtual Chassis EX4200-48T or EX4300-48T switch members with an SFP+ uplink module installed.

Before you begin to connect a QFX3500 Node device to the QFX3000-G QFabric system control plane network:

- Install your QFabric system hardware (Director group, Interconnect devices, and Node devices). For more information, see "Installing and Connecting a QFX3100 Director Device" on page 377, "Installing and Connecting a QFX3008-I Interconnect Device" on page 389, "Installing and Connecting a QFX3600 or QFX3600-I Device" on page 453, and "Installing and Connecting a QFX3500 Device" on page 473.
- Install your Virtual Chassis hardware (EX4200 or EX4300 switches). For more information, see "Installing and Connecting an EX4200 Switch" on page 491 or "Installing and Connecting an EX4300 Switch" on page 492.
- Create two Virtual Chassis of four members each.
  - See "Cabling EX4200 or EX4300 Series Switches Virtual Chassis for a QFX3000-G QFabric System Control Plane" on page 493.
  - See *Configuring an EX4200, EX4500, or EX4550 Virtual Chassis (CLI Procedure)* or *Configuring an EX2300, EX3400, or EX4300 Virtual Chassis*.

- Interconnect the two Virtual Chassis switches using the 10-Gigabit Ethernet SFP+ uplink ports. For more information, see "Interconnecting Two Virtual Chassis for Copper-Based QFX3000-G QFabric System Control Plane Redundancy" on page 497.
- Ensure that you have two RJ-45 patch cables available. For cable specifications, see "Cable Specifications for Copper-Based Control Plane Connections for the QFabric System" on page 265.
- Use Table 147 on page 516 to determine the QFX3500 Node device-to-Virtual Chassis port mappings. Specific ports have been reserved on the Virtual Chassis to connect to each of the QFabric system device types. Such design simplifies installation and facilitates timely deployment of a QFabric system. It also permits the use of a standard Virtual Chassis configuration (see *Example: Configuring the Virtual Chassis for a Copper-Based QFX3000-G QFabric System Control Plane*).

NOTE: The numerical identifiers for each Node device below are not preassigned to the Node devices that are shipped to you. They represent the order in which you connect the Node devices. For example, the first Node device port (Node 0) is connected to port **ge-0/0/0** on each Virtual Chassis.

Table 147: QFX3500 Node Device-to-Virtual Chassis Copper-Based Control Plane Port Assignments

Member 0	Member 1	Member 2	Member 3
Node 0: **ge-0/0/0**	Node 32: **ge-1/0/0**	Node 64: **ge-2/0/0**	Node 96: **ge-3/0/0**
Node 1: **ge-0/0/1**	Node 33: **ge-1/0/1**	Node 65: **ge-2/0/1**	Node 97: **ge-3/0/1**
...	...	...	...
Node 30: **ge-0/0/30**	Node 62: **ge-1/0/30**	Node 94: **ge-2/0/30**	Node 126: **ge-3/0/30**
Node 31: **ge-0/0/31**	Node 63: **ge-1/0/31**	Node 95: **ge-2/0/31**	Node 127: **ge-3/0/31**

To connect a QFX3500 Node device to the QFX3000-G QFabric system control plane network (see Figure 221 on page 515):

1. Connect one end of the first RJ-45 patch cable to the first management port (labeled **C0**) on the Node device management board.
2. Connect the other end of that cable to the appropriate member and port on the Virtual Chassis. See Table 147 on page 516.
3. Connect one end of the second RJ-45 patch cable to the second management port (labeled **C1**) on the Node device management board.

Copyright © 2018, Juniper Networks, Inc.

4. Connect the other end of that cable to the appropriate member and port on the *second* Virtual Chassis. This should be the same member number and port number that you connected to in Step 2. For example, if you connected the first cable to **ge-0/0/0** on the first Virtual Chassis, you connect the second cable to **ge-0/0/0** on the second Virtual Chassis.

5. Repeat this procedure for each Node device.

Related Documentation

- Connecting a QFX3500 Node Device to a QFX3008-I Interconnect Device on page 548
- Connecting a QFX3600 Node Device to a Copper-Based QFX3000-G QFabric System Control Plane Network on page 512

Copyright © 2018, Juniper Networks, Inc.

CHAPTER 36

Cabling a Fiber-Based Control Plane for the QFX3000-G QFabric System

- Interconnecting Two Virtual Chassis for Fiber-Based QFX3000-G QFabric System Control Plane Redundancy on page 519
- Connecting QFX3100 Director Devices in a Director Group on page 522
- Connecting QFX3100 Director Devices to a Fiber-Based QFX3000-G QFabric System Control Plane Network on page 524
- Connecting a QFX3100 Director Device to a Network for Out-of-Band Management on page 527
- Connecting a QFX3008-I Interconnect Device to a Fiber-Based QFX3000-G QFabric System Control Plane Network on page 528
- Connecting a QFX5100 Node Device to a Fiber-Based QFX3000-G QFabric System Control Plane Network on page 533
- Connecting a QFX3600 Node Device to a Fiber-Based QFX3000-G QFabric System Control Plane Network on page 537
- Connecting a QFX3500 Node Device to a Fiber-Based QFX3000-G QFabric System Control Plane Network on page 540

Interconnecting Two Virtual Chassis for Fiber-Based QFX3000-G QFabric System Control Plane Redundancy

A QFX3000-G QFabric system control plane and management network is formed by connecting the QFX Series devices in your network to two Virtual Chassis. If you are creating a fiber-based control plane network, you use eight EX4200-24F or four EX4300-48P Ethernet switches in each Virtual Chassis. For redundancy and communication, you must connect the two Virtual Chassis using the 10-Gigabit Ethernet uplink module ports configured as a link aggregation group (LAG) (see Figure 222 on page 520).

Figure 222: QFX3000-G QFabric System Fiber-Based Control Plane—Inter-Virtual Chassis LAG Connections

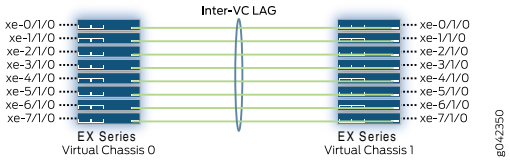

Before you begin to interconnect two Virtual Chassis for QFX3000-G QFabric system control plane redundancy:

- Install your QFabric system hardware (Director group, Interconnect devices, and Node devices). See "Installing and Connecting a QFX3100 Director Device" on page 377, "Installing and Connecting a QFX3008-I Interconnect Device" on page 389 "Installing and Connecting a QFX3600 or QFX3600-I Device" on page 453, and "Installing and Connecting a QFX3500 Device" on page 473.
- Install your Virtual Chassis hardware (EX4200 or EX4300 switches). For more information, see "Installing and Connecting an EX4200 Switch" on page 491 or "Installing and Connecting an EX4300 Switch" on page 492.
- Create two Virtual Chassis of eight EX4200-24F switch members or four EX4300-48P switch members.
  - See "Cabling EX4200 or EX4300 Series Switches Virtual Chassis for a QFX3000-G QFabric System Control Plane" on page 493.
  - See *Configuring an EX4200, EX4500, or EX4550 Virtual Chassis (CLI Procedure)* or *Configuring an EX2300, EX3400, or EX4300 Virtual Chassis*.
- Ensure that you have installed a 10-Gigabit Ethernet SFP+ transceivers in port **0** on each Virtual Chassis member uplink module (see *Installing a Transceiver*). EX4200 uplink modules only support SFP+ transceivers installed in ports **0** and **2**. For a list of supported transceivers, see *Pluggable Transceivers Supported on EX4200 Switches* and *Pluggable Transceivers Supported on EX4300 Switches*.

  Instead of using optical transceivers, you can use 10-Gigabit Ethernet SFP+ direct-attach (DAC) cables. For a list of supported DAC cables, see *SFP+ Direct Attach Copper Cables for EX Series Switches*. The procedure below assumes you are using optical transceivers, but the port mappings in Table 148 on page 521 and Table 149 on page 521 also apply to DAC cables.
- Ensure that you have appropriate fiber-optic cables (see *Pluggable Transceivers Supported on EX4200 Switches* or *Pluggable Transceivers Supported on EX4300 Switches*).
- Ensure that you have taken the necessary precautions for safe handling of lasers (see *Laser and LED Safety Guidelines and Warnings*).
- Use Table 148 on page 521 and Table 149 on page 521 to determine the fiber-based control plane Virtual Chassis-to-Virtual Chassis port mappings. Specific ports have been reserved on the Virtual Chassis to connect to each of the QFabric system device types. Such design simplifies installation and facilitates timely deployment of a QFabric

 Copyright © 2018, Juniper Networks, Inc.

system. It also permits the use of a standard Virtual Chassis configuration (see *Example: Configuring a Fiber-Based Control Plane for the QFX3000-G QFabric System*.

Table 148: Virtual Chassis-to-Virtual Chassis Fiber-Based Control Plane Port Assignments for EX 4200

Member 0	Member 1	Member 2	Member 3	Member 4	Member 5	Member 6	Member 7
xe-0/1/0 on EX0 to **xe-0/1/0** on EX1	**xe-1/1/0** on EX0 to **xe-1/1/0** on EX1	**xe-2/1/0** on EX0 to **xe-2/1/0** on EX1	**xe-3/1/0** on EX0 to **xe-3/1/0** on EX1	**xe-4/1/0** on EX0 to **xe-4/1/0** on EX1	**xe-5/1/0** on EX0 to **xe-5/1/0** on EX1	**xe-6/1/0** on EX0 to **xe-6/1/0** on EX1	**xe-7/1/0** on EX0 to **xe-7/1/0** on EX1

Table 149: Virtual Chassis-to-Virtual Chassis Fiber-Based Control Plane Port Assignments for EX4300

Member 0	Member 1	Member 2	Member 3
xe-0/1/0 on EX0 to **xe-0/1/0** on EX1	**xe-1/1/0** on EX0 to **xe-1/1/0** on EX1	**xe-2/1/0** on EX0 to **xe-2/1/0** on EX1	**xe-3/1/0** on EX0 to **xe-3/1/0** on EX1

To interconnect two Virtual Chassis for QFabric system control plane redundancy (see Figure 222 on page 520):

WARNING: **Do not look directly into a fiber-optic transceiver or into the ends of fiber-optic cables. Fiber-optic transceivers and fiber-optic cables connected to transceivers emit laser light that can damage your eyes.**

1. If the fiber-optic cable connector is covered by a rubber safety cap, remove the cap. Save the cap.

2. Remove the rubber safety cap from the SFP+ optical transceiver in port **0** on member **0** of the first Virtual Chassis. Save the cap.

3. Insert the cable connector into the optical transceiver (see Figure 213 on page 499).

Figure 223: Connecting a Fiber-Optic Cable to an Optical Transceiver Installed in an EX Series Switch

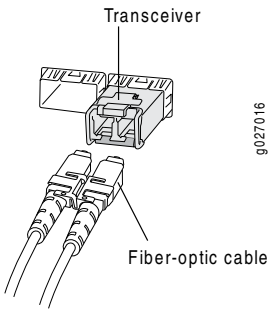

4. If the connector at the other end of the fiber-optic cable is covered by a rubber safety cap, remove the cap. Save the cap.

5. Remove the rubber safety cap from the SFP+ optical transceiver in port **0** on member **0** of the *second* Virtual Chassis. Save the cap.

6. Insert the cable connector into the optical transceiver.

7. Repeat Step 1 through Step 6 for each uplink module port, following the port assignments in Table 148 on page 521 and Table 149 on page 521.

8. Secure the cables so that they are not supporting their own weight. Place excess cable out of the way in a neatly coiled loop. Placing fasteners on a loop helps cables maintain their shape.

CAUTION: Do not bend fiber-optic cables beyond their minimum bend radius. An arc smaller than a few inches in diameter can damage the cables and cause problems that are difficult to diagnose.

Do not let fiber-optic cables hang free from the connector. Do not allow fastened loops of cables to dangle, which stresses the cables at the fastening point.

Related Documentation

- Installing and Connecting a QFX3100 Director Device on page 377

Connecting QFX3100 Director Devices in a Director Group

A QFabric system requires two QFX3100 Director devices interconnected as a QFX3100 Director *group* (see Figure 214 on page 500 through Figure 216 on page 501).

Figure 224: QFX3100 Director Group Control Plane Connections for QFX3000-G QFabric System Using Copper-Based Control Plane

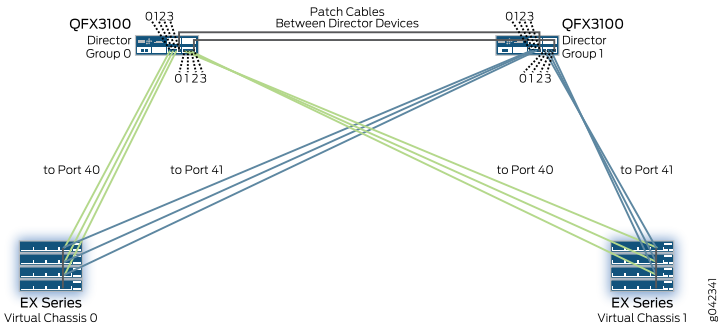

Copyright © 2018, Juniper Networks, Inc.

Figure 225: QFX3100 Director Group Control Plane Connections for QFX3000-G QFabric System Using Fiber-Based Control Plane

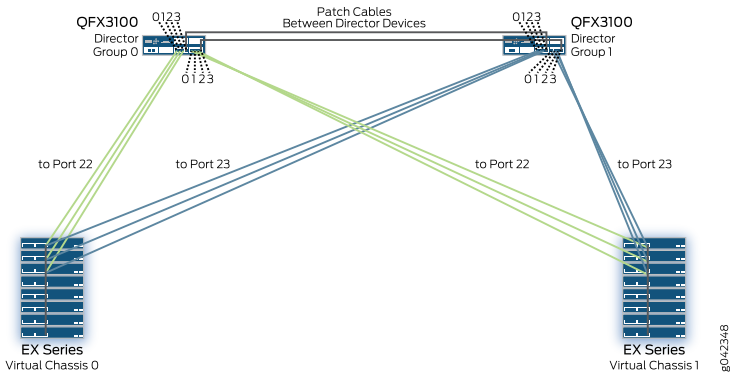

Figure 226: QFX3100 Director Group Control Plane Connections for QFX3000-M QFabric System

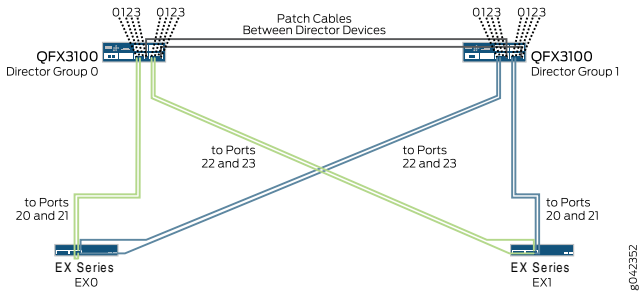

The second QFX3100 Director device provides redundancy for the control plane and management network.

Before you begin to connect QFX3100 Director devices in a Director group:

- Install your QFabric system hardware (Director group, Interconnect devices, and Node devices). For more information, see "Installing and Connecting a QFX3100 Director Device" on page 377, "Installing and Connecting a QFX3008-I Interconnect Device" on page 389, "Installing and Connecting a QFX3600 or QFX3600-I Device" on page 453, and "Installing and Connecting a QFX3500 Device" on page 473.

  NOTE: **For a copper-based QFX3000-M QFabric system control plane network, use QFX3100 Director devices with RJ-45 network modules installed. For a fiber-based control plane network, use QFX3100 Director devices with SFP network modules installed.**

- Ensure that you have appropriate transceivers and cables available. For cable specifications, see "Cable Specifications for Copper-Based Control Plane Connections

for the QFabric System" on page 265 and "Determining Transceiver Support for QFabric Systems" on page 258.

CAUTION: The redundant patch cables interconnecting the Director devices are critical links required for the operation of the Director group. The two inter-Director device links must remain connected when the Director devices are online. Although a single inter-Director device can lose a link and regain its connection, the loss of both inter-Director device links causes one of the Director devices to become isolated from the Director group. In Figure 214 on page 500 through Figure 216 on page 501, these redundant patch cables are shown in red and connect port 3 to port 3.

To connect QFX3100 Director devices in a Director group (see Figure 214 on page 500):

WARNING: Do not look directly into a fiber-optic transceiver or into the ends of fiber-optic cables. Fiber-optic transceivers and fiber-optic cables connected to transceivers emit laser light that can damage your eyes.

1. Connect the port labeled **3** on the first network module on one of the Director devices to the corresponding port (labeled **3**) on the first network module on the second Director device.

2. Connect the port labeled **3** on the *second* network module on one of the Director devices to the corresponding port (labeled **3**) on the *second* network module on the second Director device.

Related Documentation

- Connecting QFX3100 Director Devices to a Copper-Based QFX3000-G QFabric System Control Plane Network on page 502
- Connecting QFX3100 Director Devices to a Fiber-Based QFX3000-G QFabric System Control Plane Network on page 524
- *Connecting QFX3100 Director Devices to a Copper-Based QFX3000-M QFabric System Control Plane Network*
- *Connecting QFX3100 Director Devices to a Fiber-Based QFX3000-M QFabric System Control Plane Network*
- Troubleshooting QFX3100 Director Device Isolation on page 859

Connecting QFX3100 Director Devices to a Fiber-Based QFX3000-G QFabric System Control Plane Network

A QFX3000-G QFabric system control plane and management network is formed by connecting the QFX Series devices in your network to two Virtual Chassis composed of EX4200 or EX4300 switches. If you are creating a fiber-based control plane network,

Copyright © 2018, Juniper Networks, Inc.

you use eight EX4200-24F four EX4300-48P Ethernet switches in each Virtual Chassis. QFX3100 Director devices have two RJ-45 or SFP network modules network modules. Use the SFP network module ports to connect the QFX3100 Director group to each Virtual Chassis (see Figure 227 on page 525).

Figure 227: QFX3100 Director Group to Virtual Chassis Connections for QFX3000-G QFabric System

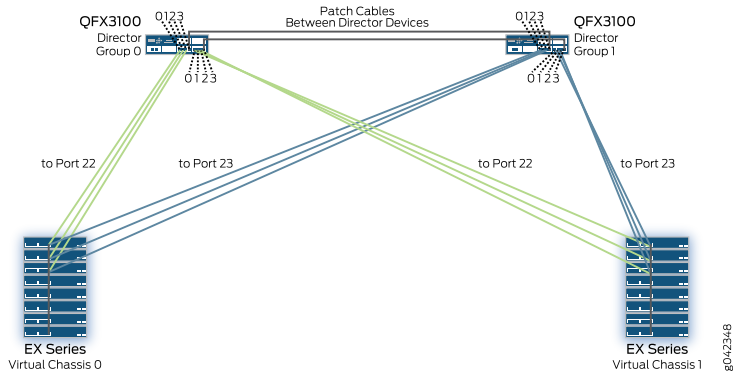

Use the following QFX3100 Director devices and EX Series switches for a fiber-based QFX3000-M QFabric system control plane network:

- QFX3100 Director devices with SFP network modules installed. Each SFP network module provides four SFP ports labeled **0** through **3**.
- Virtual Chassis EX4200-24F or EX4300-48P switches members with an SFP+ uplink module installed.

Specific ports have been reserved on the Virtual Chassis to connect to each of the QFX Series device types. Such design simplifies installation and facilitates timely deployment of a QFabric system. It also permits the use of a standard Virtual Chassis configuration (see *Example: Configuring a Fiber-Based Control Plane for the QFX3000-G QFabric System*).

Before you begin to connect a QFX3100 Director device to the fiber-based QFX3000-G QFabric system control plane network:

- Install your QFabric system hardware (Director group, Interconnect devices, and Node devices). See "Installing and Connecting a QFX3100 Director Device" on page 377, "Installing and Connecting a QFX3008-I Interconnect Device" on page 389, "Installing and Connecting a QFX3600 or QFX3600-I Device" on page 453, and "Installing and Connecting a QFX3500 Device" on page 473.
- Install your Virtual Chassis hardware (EX4200 or EX4300 switches). See "Installing and Connecting an EX4200 Switch" on page 491 or "Installing and Connecting an EX4300 Switch" on page 492.
- Create two Virtual Chassis of eight EX4200-24F switch members or four EX4300-48P switch members.

  - See "Cabling EX4200 or EX4300 Series Switches Virtual Chassis for a QFX3000-G QFabric System Control Plane" on page 493.
  - See *Configuring an EX4200, EX4500, or EX4550 Virtual Chassis (CLI Procedure)* or *Configuring an EX2300, EX3400, or EX4300 Virtual Chassis*.

- Interconnect the two Virtual Chassis switches using the 10-Gigabit Ethernet SFP+ uplink ports. See "Interconnecting Two Virtual Chassis for Copper-Based QFX3000-G QFabric System Control Plane Redundancy" on page 497.
- Connect the two QFX3100 Director devices to create a Director group. See "Connecting QFX3100 Director Devices in a Director Group" on page 500.
- Ensure that you have installed 1-Gigabit Ethernet SFP transceivers in the ports labeled **0** and **1** on both the network modules on each QFX3100 Director device (see "Installing a Transceiver in a QFX Series Device" on page 709). For a list of supported transceivers and required cables, see The Hardware Compatibility Tool.
- Ensure that you have installed 1-Gigabit Ethernet SFP transceivers in the ports labeled **22** and **23** on member **0**, **1**, and **2** (see *Installing a Transceiver*). For a list of supported transceivers and required cables, see *Pluggable Transceivers Supported on EX4200 Switches* and *Pluggable Transceivers Supported on EX4300 Switches*.
- Ensure that you have installed 1-Gigabit Ethernet SFP transceivers in the ports you are using on each EX4200 switch (see *Installing a Transceiver*). For a list of supported transceivers, see The Hardware Compatibility Tool.
- Ensure that you have appropriate fiber-optic cables.
- Ensure that you have taken the necessary precautions for safe handling of lasers (see "Laser and LED Safety Guidelines and Warnings for the QFX Series" on page 350).

To connect a QFX3100 Director device to the fiber-based QFX3000-G QFabric control plane network (see Figure 227 on page 525):

WARNING: **Do not look directly into a fiber-optic transceiver or into the ends of fiber-optic cables. Fiber-optic transceivers and fiber-optic cables connected to transceivers emit laser light that can damage your eyes.**

1. Connect both network modules on the first Director device (labeled **DG0** in Figure 227 on page 525) to the two Virtual Chassis (labeled **VC0** and **VC1** in Figure 227 on page 525). You connect the first three ports (labeled **0** through **2**) on the first network module to the first Virtual Chassis (**VC0**). You connect the first two ports on the second network module (also labeled **0** through **2**) to the second Virtual Chassis (**VC1**). The ports used are the same on each Virtual Chassis.

Copyright © 2018, Juniper Networks, Inc.

Table 150: QFX3100 Director Device-to-VIrtual Chassis Control Plane Port Assignments for DG0

Network Module Port 0	Network Module Port 1	Network Module Port 2	Network Module Port 3
Virtual Chassis port **ge-0/0/22**	Virtual Chassis port **ge-1/0/22**	Virtual Chassis port **ge-2/0/22**	Connect this port to the identical port on the other Director device. See "Connecting QFX3100 Director Devices in a Director Group" on page 500.

2. Connect both network modules on the *second* Director device (labeled **DG1** in Figure 227 on page 525) to the two Virtual Chassis (labeled **VC0** and **VC1** in Figure 227 on page 525). You connect the first three ports on the first network module to the first Virtual Chassis (**VC0**). You connect the first three ports on the second network module to the second Virtual Chassis (**VC1**). The ports used are the same on each Virtual Chassis.

Table 151: Second QFX3100 Director Device-to-Virtual Chassis Control Plane Port Assignments for DG1

Network Module Port 0	Network Module Port 1	Network Module Port 2	Network Module Port 3
Virtual Chassis port **ge-0/0/23**	Virtual Chassis port **ge-1/0/23**	Virtual Chassis port **ge-2/0/23**	Connect this port to the identical port on the other Director device. See "Connecting QFX3100 Director Devices in a Director Group" on page 500.

Related Documentation

- Installing and Connecting a QFX3100 Director Device on page 377

Connecting a QFX3100 Director Device to a Network for Out-of-Band Management

Use the management port on your QFX3100 Director device to connect each Director device in your Director group to your out-of-band management network.

NOTE: You cannot use the management port to perform the initial configuration of the QFX3100 Director device. You must configure the management port before you can successfully connect to the QFX3100 Director device using this port. See "Performing the QFabric System Initial Setup on a QFX3100 Director Group" on page 551.

Ensure that you have an RJ-45 patch cable available.

To connect a QFX3100 Director device to a network for out-of-band management:

1. Connect one end of the Ethernet cable to the management port (labeled **MGMT** on the Director device front panel).

2. Connect the other end of the Ethernet cable to your management device or management network.

3. Repeat these steps for the second Director device.

Related Documentation

- Management Port Connector Pinouts for the QFX Series on page 260
- Cable Specifications for Console and Management Connections for the QFX Series on page 268
- Connecting QFX3100 Director Devices to a Copper-Based QFX3000-G QFabric System Control Plane Network on page 502
- *Connecting QFX3100 Director Devices to a Copper-Based QFX3000-M QFabric System Control Plane Network*
- *Connecting QFX3100 Director Devices to a Fiber-Based QFX3000-M QFabric System Control Plane Network*
- Connecting a QFX Series Device to a Management Console on page 386

Connecting a QFX3008-I Interconnect Device to a Fiber-Based QFX3000-G QFabric System Control Plane Network

A QFX3000-G QFabric system control plane and management network is formed by connecting the QFX Series devices in your network to two Virtual Chassis composed of EX4200 or EX4300 switches. If you are creating a fiber-based control plane network, you use eight EX4200-24F or four EX4300-48P Ethernet switches in each Virtual Chassis. QFX3008-I Interconnect Devices have four small form factor pluggable plus (SFP+) management ports on each Control Board (**CB0** and **CB1**). Use the SFP+ management ports to connect the QFX3008-I Interconnect Devices to each Virtual Chassis (see Figure 228 on page 528).

Figure 228: QFX3000-G QFabric System Fiber-Based Control Plane—Interconnect Device to Virtual Chassis Connections

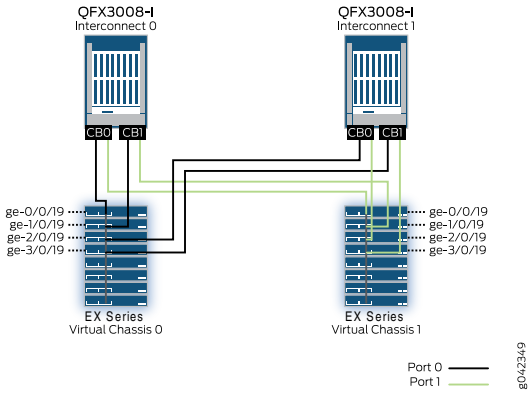

Copyright © 2018, Juniper Networks, Inc.

Specific ports have been reserved on the Virtual Chassis to connect to the Interconnect devices, Node devices, and QFX3100 Director devices in your QFabric system. Such design simplifies installation and facilitates timely deployment of a QFabric system. It also enables the use of a standard Virtual Chassis configuration (see *Example: Configuring a Fiber-Based Control Plane for the QFX3000-G QFabric System*).

Before you begin to connect a QFX3008-I Interconnect Device to the fiber-based QFX3000-G QFabric system control plane network:

- Install your QFabric system hardware (Director group, Interconnect devices, and Node devices). For more information, see "Installing and Connecting a QFX3100 Director Device" on page 377, "Installing and Connecting a QFX3008-I Interconnect Device" on page 389, "Installing and Connecting a QFX3600 or QFX3600-I Device" on page 453, and "Installing and Connecting a QFX3500 Device" on page 473.
- Install your Virtual Chassis hardware. For more information, see "Installing and Connecting an EX4200 Switch" on page 491 or "Installing and Connecting an EX4300 Switch" on page 492.
- Create two Virtual Chassis of eight EX4200-24F switch members or four EX4300-48P switch members.
  - See "Cabling EX4200 or EX4300 Series Switches Virtual Chassis for a QFX3000-G QFabric System Control Plane" on page 493.
  - See *Configuring an EX4200, EX4500, or EX4550 Virtual Chassis (CLI Procedure)* or *Configuring an EX2300, EX3400, or EX4300 Virtual Chassis*.
- Interconnect the two Virtual Chassis switches using the 10-Gigabit Ethernet SFP+ uplink ports. For more information, see "Interconnecting Two Virtual Chassis for Fiber-Based QFX3000-G QFabric System Control Plane Redundancy" on page 519.
- Ensure that 1-Gigabit Ethernet SFP transceivers are installed in port **0** and port **1** on both Control Boards for each QFX3008-I Interconnect device (see "Installing a Transceiver in a QFX Series Device" on page 709). For a list of supported transceivers and required cables, see The Hardware Compatibility Tool.
- Ensure that you have installed 1-Gigabit Ethernet SFP transceivers in the ports you are using on each EX Series switch (see *Installing a Transceiver*). For a list of supported transceivers, see The Hardware Compatibility Tool.
- Ensure that you have appropriate fiber-optic cables.
- Ensure that you have taken the necessary precautions for safe handling of lasers (see "Laser and LED Safety Guidelines and Warnings for the QFX Series" on page 350).
- Use Table 152 on page 530 to determine the QFX3008-I Interconnect device-to-Virtual Chassis port mappings. Specific ports have been reserved on the Virtual Chassis to connect to each of the QFX Series device types. Such design simplifies installation and facilitates timely deployment of a QFabric system.

NOTE: The two Control Boards in each Interconnect device are labeled CB0 and CB1 in Figure 228 on page 528 and Table 152 on page 530. Interconnect devices IC2 and IC3 are not shown in Figure 228 on page 528 and describe the port mappings for the optional third and fourth Interconnect devices

Table 152: Interconnect Device Port Mappings

Interconnect Device	Virtual Chassis VC0	Virtual Chassis VC1
IC0	• CB0, port 0 to ge-0/0/19 • CB1, port 0 to ge-1/0/19	• CB0, port 1 to ge-0/0/19 • CB1, port 1 to ge-1/0/19
IC1	• CB0, port 0 to ge-2/0/19 • CB1, port 0 to ge-3/0/19	• CB0, port 1 to ge-2/0/19 • CB1, port 1 to ge-3/0/19
IC2	• CB0, port 0 to ge-0/0/18 • CB1, port 0 to ge-1/0/18	• CB0, port 1 to ge-0/0/18 • CB1, port 1 to ge-1/0/18
IC3	• CB0, port 0 to ge-2/0/18 • CB1, port 0 to ge-3/0/18	• CB0, port 1 to ge-2/0/18 • CB1, port 1 to ge-3/0/18

Copyright © 2018, Juniper Networks, Inc.

To connect each QFX3600-I Interconnect device to the fiber-based control plane network:

WARNING: Do not look directly into a fiber-optic transceiver or into the ends of fiber-optic cables. Fiber-optic transceivers and fiber-optic cables connected to transceivers emit laser light that can damage your eyes.

NOTE: Before you connect each cable to a device, if the fiber-optic cable connector is covered by a rubber safety cap, remove the cap. If the transceiver is covered with a rubber safety cap, remove the cap. Save the caps for future use.

1. Connect the first QFX3008-I Interconnect device.

   a. Connect one end of the first fiber optic cable to the SFP optical transceiver in the first management port labeled (labeled **0**) on the first Control Board (labeled **CB 0**).

   b. Connect the other end of that cable to port **ge-0/0/19** on the first Virtual Chassis.

   c. Connect one end of the second fiber optic cable to the SFP optical transceiver in the second management port (labeled **1**) on **CB0**.

   d. Connect the other end of that cable to port **ge-0/0/19** on the *second* Virtual Chassis.

   e. Connect one end of the third fiber optic cable to the SFP optical transceiver in the first management port labeled (labeled **0**) on the *second* Control Board (labeled **CB 1**).

   f. Connect the other end of that cable to port **ge-1/0/19** on the first Virtual Chassis.

   g. Connect one end of the fourth fiber optic cable to the SFP optical transceiver in the second management port (labeled **1**) on **CB1**.

   h. Connect the other end of that cable to port **ge-1/0/19** on the *second* Virtual Chassis.

2. Connect the second QFX3008-I Interconnect device.

   a. Connect one end of the first fiber optic cable to the SFP optical transceiver in the first management port labeled (labeled **0**) on the first Control Board (labeled **CB 0**).

   b. Connect the other end of that cable to port **ge-2/0/19** on the first Virtual Chassis.

c. Connect one end of the second fiber optic cable to the SFP optical transceiver in the second management port (labeled **1**) on **CB0**.

d. Connect the other end of that cable to port **ge-2/0/19** on the *second* Virtual Chassis.

e. Connect one end of the third fiber optic cable to the SFP optical transceiver in the first management port labeled (labeled **0**) on the *second* Control Board (labeled **CB 1**).

f. Connect the other end of that cable to port **ge-3/0/19** on the first Virtual Chassis.

g. Connect one end of the fourth fiber optic cable to the SFP optical transceiver in the second management port (labeled **1**) on **CB1**.

h. Connect the other end of that cable to port **ge-3/0/19** on the *second* Virtual Chassis.

3. (Optional) Connect the third QFX3008-I Interconnect device.

   a. Connect one end of the first fiber optic cable to the SFP optical transceiver in the first management port labeled (labeled **0**) on the first Control Board (labeled **CB 0**).

   b. Connect the other end of that cable to port **ge-0/0/18** on the first Virtual Chassis.

   c. Connect one end of the second fiber optic cable to the SFP optical transceiver in the second management port (labeled **1**) on **CB0**.

   d. Connect the other end of that cable to port **ge-0/0/18** on the *second* Virtual Chassis.

   e. Connect one end of the third fiber optic cable to the SFP optical transceiver in the first management port labeled (labeled **0**) on the *second* Control Board (labeled **CB 1**).

   f. Connect the other end of that cable to port **ge-1/0/18** on the first Virtual Chassis.

   g. Connect one end of the fourth fiber optic cable to the SFP optical transceiver in the second management port (labeled **1**) on **CB1**.

   h. Connect the other end of that cable to port **ge-1/0/18** on the *second* Virtual Chassis.

4. Connect the fourth QFX3008-I Interconnect device.

 Copyright © 2018, Juniper Networks, Inc.

a. Connect one end of the first fiber optic cable to the SFP optical transceiver in the first management port labeled (labeled **0**) on the first Control Board (labeled **CB 0**).

b. Connect the other end of that cable to port **ge-2/0/18** on the first Virtual Chassis.

c. Connect one end of the second fiber optic cable to the SFP optical transceiver in the second management port (labeled **1**) on **CB0**.

d. Connect the other end of that cable to port **ge-2/0/18** on the *second* Virtual Chassis.

e. Connect one end of the third fiber optic cable to the SFP optical transceiver in the first management port labeled (labeled **0**) on the *second* Control Board (labeled **CB 1**).

f. Connect the other end of that cable to port **ge-3/0/18** on the first Virtual Chassis.

g. Connect one end of the fourth fiber optic cable to the SFP optical transceiver in the second management port (labeled **1**) on **CB1**.

h. Connect the other end of that cable to port **ge-3/0/18** on the *second* Virtual Chassis.

Related Documentation

- Connecting a QFX3600 Node Device to a QFX3008-I Interconnect Device on page 547
- Connecting a QFX3500 Node Device to a QFX3008-I Interconnect Device on page 548

Connecting a QFX5100 Node Device to a Fiber-Based QFX3000-G QFabric System Control Plane Network

A QFX3000-G QFabric system control plane and management network is formed by connecting the QFX Series devices in your network to two Virtual Chassis composed of EX4200 or EX4300 switches. If you are creating a fiber-based control plane network, you use eight EX4200-24F or four EX4300-48P Ethernet switches in each Virtual Chassis. QFX5100 Node devices have an RJ-45 management port and one or two small form-factor pluggable (SFP) cages for copper or fiber SFP modules. For an all-fiber connection, place an 1 Gbps fiber SFP in the **C0** and **C1** management ports to connect the QFX5100 Node device to each Virtual Chassis, (see Figure 229 on page 534.)

Figure 229: QFX5100 Node Device Fiber-Based Control Plane Connections for QFX3000-G QFabric System

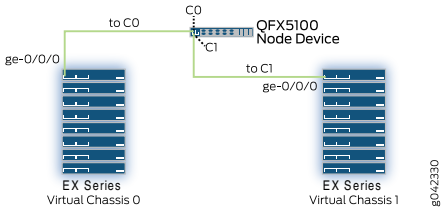

Use the following QFX5100 Node devices and EX Series switches for a fiber-based QFX3000-G QFabric system control plane network:

- QFX5100 Node devices with two 1-Gbps SFP modules installed in the management ports labeled **C0** and **C1**.
- Virtual Chassis EX4200-24F or EX4300-48P switch members with an SFP+ uplink module installed.

Before you begin to connect a QFX5100 Node device to the fiber-based QFX3000-M QFabric system control plane network:

- Install your QFabric system hardware (Director group, Interconnect devices, and Node devices). For more information, see "Installing and Connecting a QFX3100 Director Device" on page 377, "Installing and Connecting a QFX3008-I Interconnect Device" on page 389, "Installing and Connecting a QFX3600 or QFX3600-I Device" on page 453, "Installing and Connecting a QFX3500 Device" on page 473 and "Installing and Connecting a QFX5100 Device" on page 433.
- Install your Virtual Chassis hardware (EX4200 or EX4300 switches). For more information, see "Installing and Connecting an EX4200 Switch" on page 491or "Installing and Connecting an EX4300 Switch" on page 492.
- Create two Virtual Chassis of eight EX4200-24F switch members or four EX4300-48P switch members.
  - See "Cabling EX4200 or EX4300 Series Switches Virtual Chassis for a QFX3000-G QFabric System Control Plane" on page 493.
  - See *Configuring an EX4200, EX4500, or EX4550 Virtual Chassis (CLI Procedure)* or *Configuring an EX2300, EX3400, or EX4300 Virtual Chassis*.
- Interconnect the two Virtual Chassis switches using the 10-Gigabit Ethernet SFP+ uplink ports. See "Interconnecting Two Virtual Chassis for Copper-Based QFX3000-G QFabric System Control Plane Redundancy" on page 497.
- Ensure that you have installed 1-Gigabit Ethernet SFP transceivers in both management ports labeled **C0** on each QFX5100 Node device (see "Installing a Transceiver in a QFX Series Device" on page 709). For a list of supported transceivers and required cables, see The Hardware Compatibility Tool.
- Ensure that you have installed 1-Gigabit Ethernet SFP transceivers in the ports you are using on each EX Series switch (see *Installing a Transceiver*). For a list of supported transceivers, see The Hardware Compatibility Tool.

Copyright © 2018, Juniper Networks, Inc.

- Ensure that you have appropriate fiber-optic cables.
- Ensure that you have taken the necessary precautions for safe handling of lasers (see "Laser and LED Safety Guidelines and Warnings for the QFX Series" on page 350).
- Use Table 153 on page 535 or Table 154 on page 535to determine the QFX5100 Node device-to-Virtual Chassis port mappings. Specific ports have been reserved on the Virtual Chassis to connect to each of the QFX Series device types. Such design simplifies installation and facilitates timely deployment of a QFabric system. It also permits the use of a standard Virtual Chassis configuration (see *Example: Configuring a Fiber-Based Control Plane for the QFX3000-G QFabric System*).

NOTE: The numerical identifiers for each Node device below are not preassigned to the Node devices that are shipped to you. They represent the order in which you connect the Node devices. For example, the first Node device (Node 0) is connected to port ge-0/0/0 on each Virtual Chassis.

Table 153: QFX5100 Node Device-to-EX4200 Virtual Chassis Fiber-Based Control Plane Port Assignments

Member 0	Member 1	Member 2	Member 3	Member 4	Member 5	Member 6	Member 7
Node: 0 ge-0/0/0	Node: 16 ge-1/0/0	Node: 32 ge-2/0/0	Node: 48 ge-3/0/0	Node: 64 ge-4/0/0	Node: 80 ge-5/0/0	Node: 96 ge-6/0/0	Node: 112 ge-7/0/0
Node: 1 ge-0/0/1	Node: 17 ge-1/0/1	Node: 33 ge-2/0/1	Node: 49 ge-3/0/1	Node: 65 ge-4/0/1	Node: 81 ge-5/0/1	Node: 97 ge-6/0/1	Node: 113 ge-7/0/1
...	...	...	...	...	...	...	...
Node: 14 ge-0/0/14	Node: 30 ge-1/0/14	Node: 46 ge-2/0/14	Node: 62 ge-3/0/14	Node: 78 ge-4/0/14	Node: 94 ge-5/0/14	Node: 110 ge-6/0/14	Node: 126 ge-7/0/14
Node: 15 ge-0/0/15	Node: 31 ge-1/0/15	Node: 47 ge-2/0/15	Node: 63 ge-3/0/15	Node: 79 ge-4/0/15	Node: 95 ge-5/0/15	Node: 111 ge-6/0/15	Node: 127 ge-7/0/15

Table 154: QFX5100-48S Node Device-to-EX4300 Virtual Chassis Copper-Based Control Plane Port Assignments

Member 0	Member 1	Member 2	Member 3
Node 0: ge-0/0/0	Node 32: ge-1/0/0	Node 64: ge-2/0/0	Node 96: ge-3/0/0
Node 1: ge-0/0/1	Node 33: ge-1/0/1	Node 65: ge-2/0/1	Node 97: ge-3/0/1
...	...	...	...
Node 30: ge-0/0/30	Node 62: ge-1/0/30	Node 94: ge-2/0/30	Node 126: ge-3/0/30

Copyright © 2018, Juniper Networks, Inc.

Table 154: QFX5100-48S Node Device-to-EX4300 Virtual Chassis Copper-Based Control Plane Port Assignments (continued)

Member 0	Member 1	Member 2	Member 3
Node 31: ge-0/0/31	Node 63: ge-1/0/31	Node 95: ge-2/0/31	Node 127: ge-3/0/31

To connect a QFX5100 Node device to the fiber-based QFX3000-G QFabric system control plane network:

WARNING: **Do not look directly into a fiber-optic transceiver or into the ends of fiber-optic cables. Fiber-optic transceivers and fiber-optic cables connected to transceivers emit laser light that can damage your eyes.**

1. If the fiber-optic cable connector is covered by a rubber safety cap, remove the cap. Save the cap.

2. Remove the rubber safety cap from the SFP optical transceiver in the first management port (labeled **C0**) on the Node device management panel. Save the cap.

3. Insert the cable connector into the optical transceiver.

4. Connect the other end of that cable to the appropriate port on the first Virtual Chassis. See Table 153 on page 535.

5. Remove the rubber safety cap from the SFP optical transceiver in the second management port (labeled **C1**) on the Node device management panel. Save the cap.

6. Insert the cable connector into the optical transceiver.

7. Connect the other end of that cable to the appropriate port on the *second* Virtual Chassis. This should be the same port number that you connected to in Step 4. For example, if you connected the first cable to ge-0/0/0 on the first Virtual Chassis, you connect the second cable to ge-0/0/0 on the second Virtual Chassis.

8. Repeat this procedure for each QFX5100 Node device.

9. Secure the cables so that they are not supporting their own weight. Place excess cable out of the way in a neatly coiled loop. Placing fasteners on a loop helps cables maintain their shape.

CAUTION: **Do not bend fiber-optic cables beyond their minimum bend radius. An arc smaller than a few inches in diameter can damage the cables and cause problems that are difficult to diagnose.**

Copyright © 2018, Juniper Networks, Inc.

Do not let fiber-optic cables hang free from the connector. Do not allow fastened loops of cables to dangle, which stresses the cables at the fastening point.

Related Documentation

- Connecting a QFX5100 Node Device to a QFX3008-I Interconnect Device on page 545
- Connecting a QFX3600 Node Device to a Fiber-Based QFX3000-G QFabric System Control Plane Network on page 537

Connecting a QFX3600 Node Device to a Fiber-Based QFX3000-G QFabric System Control Plane Network

A QFX3000-G QFabric system control plane and management network is formed by connecting the QFX Series devices in your network to two Virtual Chassis composed of EX4200 or EX4300 switches. If you are creating a fiber-based control plane network, you use eight EX4200-24F or four EX4300-48P Ethernet switches in each Virtual Chassis. QFX3600 Node devices have RJ-45 and SFP management ports. Use the SFP management ports (labeled **C0S** and **C1S**) to connect the QFX3500 Node device to each Virtual Chassis (see Figure 230 on page 537).

Figure 230: QFX3600 Node Device Fiber-Based Control Plane Connections for QFX3000-M QFabric System

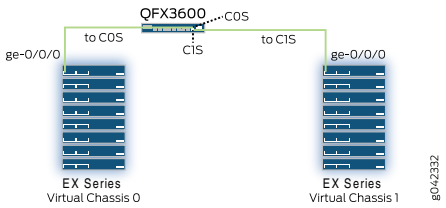

Use the following QFX3600 Node devices and EX Series switches for a fiber-based QFX3000-G QFabric system control plane network:

- QFX3600 Node devices.
- Virtual Chassis EX4200-24F or EX4300-48P switch members with an SFP+ uplink module installed.

Before you begin to connect a QFX3600 Node device to the fiber-based QFX3000-G QFabric system control plane network:

- Install your QFabric system hardware (Director group, Interconnect devices, and Node devices). For more information, see "Installing and Connecting a QFX3100 Director Device" on page 377, "Installing and Connecting a QFX3008-I Interconnect Device" on page 389, "Installing and Connecting a QFX3600 or QFX3600-I Device" on page 453, and "Installing and Connecting a QFX3500 Device" on page 473.
- Install your Virtual Chassis hardware (EX4200 or EX4300 switches). For more information, see "Installing and Connecting an EX4200 Switch" on page 491or "Installing and Connecting an EX4300 Switch" on page 492.
- Create two Virtual Chassis of eight EX4200-24F switch members or four EX4300-48P switch members.
  - See "Cabling EX4200 or EX4300 Series Switches Virtual Chassis for a QFX3000-G QFabric System Control Plane" on page 493.
  - See *Configuring an EX4200, EX4500, or EX4550 Virtual Chassis (CLI Procedure)* or *Configuring an EX2300, EX3400, or EX4300 Virtual Chassis*.
- Interconnect the two Virtual Chassis switches using the 10-Gigabit Ethernet SFP+ uplink ports. See "Interconnecting Two Virtual Chassis for Copper-Based QFX3000-G QFabric System Control Plane Redundancy" on page 497.
- Ensure that you have installed 1-Gigabit Ethernet SFP transceivers in management ports **C0S** and **C1S** on each QFX3600 Node device (see "Installing a Transceiver in a QFX Series Device" on page 709). For a list of supported transceivers and required cables, see The Hardware Compatibility Tool.
- Ensure that you have installed 1-Gigabit Ethernet SFP transceivers in the ports you are using on each EX Series switch (see *Installing a Transceiver*). For a list of supported transceivers, see The Hardware Compatibility Tool.
- Ensure that you have appropriate fiber-optic cables.
- Ensure that you have taken the necessary precautions for safe handling of lasers (see "Laser and LED Safety Guidelines and Warnings for the QFX Series" on page 350).
- Use Table 155 on page 539 or Table 156 on page 539 to determine the QFX3600 Node device-to-Virtual Chassis port mappings. Specific ports have been reserved on the Virtual Chassis to connect to each of the QFX Series device types. Such design simplifies installation and facilitates timely deployment of a QFabric system. It also permits the use of a standard Virtual Chassis configuration (see *Example: Configuring a Fiber-Based Control Plane for the QFX3000-G QFabric System*).

NOTE: **The numerical identifiers for each Node device below are not preassigned to the Node devices that are shipped to you. They represent the order in which you connect the Node devices. For example, the first Node device (Node 0) is connected to port ge-0/0/0 on each Virtual Chassis.**

Copyright © 2018, Juniper Networks, Inc.

Table 155: QFX3600 Node Device-to-Virtual Chassis Fiber-Based Control Plane Port Assignments

Member 0	Member 1	Member 2	Member 3	Member 4	Member 5	Member 6	Member 7
Node: 0 **ge-0/0/0**	Node: 16 **ge-1/0/0**	Node: 32 **ge-2/0/0**	Node: 48 **ge-3/0/0**	Node: 64 **ge-4/0/0**	Node: 80 **ge-5/0/0**	Node: 96 **ge-6/0/0**	Node: 112 **ge-7/0/0**
Node: 1 **ge-0/0/1**	Node: 17 **ge-1/0/1**	Node: 33 **ge-2/0/1**	Node: 49 **ge-3/0/1**	Node: 65 **ge-4/0/1**	Node: 81 **ge-5/0/1**	Node: 97 **ge-6/0/1**	Node: 113 **ge-7/0/1**
...	...	...	...	...	...	...	...
Node: 14 **ge-0/0/14**	Node: 30 **ge-1/0/14**	Node: 46 **ge-2/0/14**	Node: 62 **ge-3/0/14**	Node: 78 **ge-4/0/14**	Node: 94 **ge-5/0/14**	Node: 110 **ge-6/0/14**	Node: 126 **ge-7/0/14**
Node: 15 **ge-0/0/15**	Node: 31 **ge-1/0/15**	Node: 47 **ge-2/0/15**	Node: 63 **ge-3/0/15**	Node: 79 **ge-4/0/15**	Node: 95 **ge-5/0/15**	Node: 111 **ge-6/0/15**	Node: 127 **ge-7/0/15**

Table 156: QFX3600 Node Device-to-EX4300 Virtual Chassis Copper-Based Control Plane Port Assignments

Member 0	Member 1	Member 2	Member 3
Node 0: ge-0/0/0	Node 32: ge-1/0/0	Node 64: ge-2/0/0	Node 96: ge-3/0/0
Node 1: ge-0/0/1	Node 33: ge-1/0/1	Node 65: ge-2/0/1	Node 97: ge-3/0/1
...	...	...	...
Node 30: ge-0/0/30	Node 62: ge-1/0/30	Node 94: ge-2/0/30	Node 126: ge-3/0/30
Node 31: ge-0/0/31	Node 63: ge-1/0/31	Node 95: ge-2/0/31	Node 127: ge-3/0/31

To connect a QFX3600 Node device to the fiber-based QFX3000-G QFabric system control plane network (see Figure 230 on page 537):

WARNING: **Do not look directly into a fiber-optic transceiver or into the ends of fiber-optic cables. Fiber-optic transceivers and fiber-optic cables connected to transceivers emit laser light that can damage your eyes.**

1. If the fiber-optic cable connector is covered by a rubber safety cap, remove the cap. Save the cap.

2. Remove the rubber safety cap from the SFP optical transceiver in the first SFP management port (labeled **COS**) on the Node device front panel. Save the cap.

3. Insert the cable connector into the optical transceiver.

4. Connect the other end of that cable to the appropriate port on the first Virtual Chassis. See Table 155 on page 539.

5. Remove the rubber safety cap from the SFP optical transceiver in the second SFP management port (labeled **C1S**) on the Node device front panel. Save the cap.

6. Insert the cable connector into the optical transceiver.

7. Connect the other end of that cable to the appropriate port on the *second* EX Series switch. This should be the same port number that you connected to in Step 4. For example, if you connected the first cable to **ge-0/0/0** on the first Virtual Chassis, you connect the second cable to **ge-0/0/0** on the second Virtual Chassis.

8. Repeat this procedure for each QFX3600 Node device.

9. Secure the cables so that they are not supporting their own weight. Place excess cable out of the way in a neatly coiled loop. Placing fasteners on a loop helps cables maintain their shape.

CAUTION: **Do not bend fiber-optic cables beyond their minimum bend radius. An arc smaller than a few inches in diameter can damage the cables and cause problems that are difficult to diagnose.**

Do not let fiber-optic cables hang free from the connector. Do not allow fastened loops of cables to dangle, which stresses the cables at the fastening point.

Related Documentation

- *Connecting a QFX3600-I Interconnect Device to a Fiber-Based QFX3000-M QFabric System Control Plane Network*
- *Connecting a QFX3600 Node Device to a QFX3600-I Interconnect Device*
- *Connecting QFX3100 Director Devices to a Fiber-Based QFX3000-M QFabric System Control Plane Network*
- Connecting QFX3100 Director Devices in a Director Group on page 500

Connecting a QFX3500 Node Device to a Fiber-Based QFX3000-G QFabric System Control Plane Network

A QFX3000-G QFabric system control plane and management network is formed by connecting the QFX Series devices in your network to two Virtual Chassis composed of EX Series switches. If you are creating a fiber-based control plane network, you use eight

 Copyright © 2018, Juniper Networks, Inc.

EX4200-24F or four EX4300-48P Ethernet switches in each Virtual Chassis. QFX3500 Node devices have an RJ-45 or SFP management board. Use the SFP management ports (labeled **C0** and **C1**) to connect the QFX3500 Node device to each Virtual Chassis (see Figure 231 on page 541).

Figure 231: QFX3500 Node Device Fiber-Based Control Plane Connections for QFX3000-G QFabric System

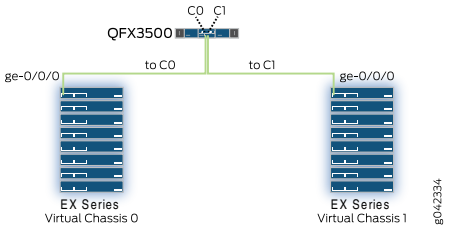

Use the following QFX3500 Node devices and EX Series switches for a fiber-based QFX3000-G QFabric system control plane network:

- QFX3500 Node devices with an SFP management board installed. The SFP management board provides two small form-factor pluggable (SFP) 1-Gbps management ports labeled **C0** and **C1**.
- Virtual Chassis EX4200-24F or EX4300-48P switch members with an SFP+ uplink module installed.

Before you begin to connect a QFX3500 Node device to the fiber-based QFX3000-M QFabric system control plane network:

- Install your QFabric system hardware (Director group, Interconnect devices, and Node devices). For more information, see "Installing and Connecting a QFX3100 Director Device" on page 377, "Installing and Connecting a QFX3008-I Interconnect Device" on page 389, "Installing and Connecting a QFX3600 or QFX3600-I Device" on page 453, and "Installing and Connecting a QFX3500 Device" on page 473.
- Create two Virtual Chassis of eight EX4200-24F switch members or four EX4300-48P switch members.
  - See "Cabling EX4200 or EX4300 Series Switches Virtual Chassis for a QFX3000-G QFabric System Control Plane" on page 493.
  - See *Configuring an EX4200, EX4500, or EX4550 Virtual Chassis (CLI Procedure)* or *Configuring an EX2300, EX3400, or EX4300 Virtual Chassis*.
- Interconnect the two Virtual Chassis switches using the 10-Gigabit Ethernet SFP+ uplink ports. See "Interconnecting Two Virtual Chassis for Copper-Based QFX3000-G QFabric System Control Plane Redundancy" on page 497.
- Ensure that you have installed 1-Gigabit Ethernet SFP transceivers in management ports **C0** and **C1** on each QFX3500 Node device (see "Installing a Transceiver in a QFX Series Device" on page 709). For a list of supported transceivers and required cables, see The Hardware Compatibility Tool.

- Ensure that you have installed 1-Gigabit Ethernet SFP transceivers in the ports you are using on each EX Series switch (see *Installing a Transceiver*). For a list of supported transceivers, see The Hardware Compatibility Tool.
- Ensure that you have appropriate fiber-optic cables.
- Ensure that you have taken the necessary precautions for safe handling of lasers (see "Laser and LED Safety Guidelines and Warnings for the QFX Series" on page 350).
- Use Table 157 on page 542 and Table 158 on page 542 to determine the QFX3500 Node device-to-Virtual Chassis port mappings. Specific ports have been reserved on the Virtual Chassis to connect to each of the QFX Series device types. Such design simplifies installation and facilitates timely deployment of a QFabric system. It also permits the use of a standard Virtual Chassis configuration (see *Example: Configuring a Fiber-Based Control Plane for the QFX3000-G QFabric System*).

NOTE: The numerical identifiers for each Node device below are not preassigned to the Node devices that are shipped to you. They represent the order in which you connect the Node devices. For example, the first Node device (Node 0) is connected to port ge-0/0/0 on each Virtual Chassis.

Table 157: QFX3500 Node Device-to-Virtual Chassis Fiber-Based Control Plane Port Assignments

Member 0	Member 1	Member 2	Member 3	Member 4	Member 5	Member 6	Member 7
Node: 0 **ge-0/0/0**	Node: 16 **ge-1/0/0**	Node: 32 **ge-2/0/0**	Node: 48 **ge-3/0/0**	Node: 64 **ge-4/0/0**	Node: 80 **ge-5/0/0**	Node: 96 **ge-6/0/0**	Node: 112 **ge-7/0/0**
Node: 1 **ge-0/0/1**	Node: 17 **ge-1/0/1**	Node: 33 **ge-2/0/1**	Node: 49 **ge-3/0/1**	Node: 65 **ge-4/0/1**	Node: 81 **ge-5/0/1**	Node: 97 **ge-6/0/1**	Node: 113 **ge-7/0/1**
...	...	...	...	...	...	...	...
Node: 14 **ge-0/0/14**	Node: 30 **ge-1/0/14**	Node: 46 **ge-2/0/14**	Node: 62 **ge-3/0/14**	Node: 78 **ge-4/0/14**	Node: 94 **ge-5/0/14**	Node: 110 **ge-6/0/14**	Node: 126 **ge-7/0/14**
Node: 15 **ge-0/0/15**	Node: 31 **ge-1/0/15**	Node: 47 **ge-2/0/15**	Node: 63 **ge-3/0/15**	Node: 79 **ge-4/0/15**	Node: 95 **ge-5/0/15**	Node: 111 **ge-6/0/15**	Node: 127 **ge-7/0/15**

Table 158: QFX3500 Node Device-to-EX4300 Virtual Chassis Copper-Based Control Plane Port Assignments

Member 0	Member 1	Member 2	Member 3
Node 0: ge-0/0/0	Node 32: ge-1/0/0	Node 64: ge-2/0/0	Node 96: ge-3/0/0
Node 1: ge-0/0/1	Node 33: ge-1/0/1	Node 65: ge-2/0/1	Node 97: ge-3/0/1

Copyright © 2018, Juniper Networks, Inc.

Table 158: QFX3500 Node Device-to-EX4300 Virtual Chassis Copper-Based Control Plane Port Assignments (continued)

Member 0	Member 1	Member 2	Member 3
...	...	...	...
Node 30: ge-0/0/30	Node 62: ge-1/0/30	Node 94: ge-2/0/30	Node 126: ge-3/0/30
Node 31: ge-0/0/31	Node 63: ge-1/0/31	Node 95: ge-2/0/31	Node 127: ge-3/0/31

To connect a QFX3500 Node device to the fiber-based QFX3000-G QFabric system control plane network (see Figure 231 on page 541):

WARNING: **Do not look directly into a fiber-optic transceiver or into the ends of fiber-optic cables. Fiber-optic transceivers and fiber-optic cables connected to transceivers emit laser light that can damage your eyes.**

1. If the fiber-optic cable connector is covered by a rubber safety cap, remove the cap. Save the cap.
2. Remove the rubber safety cap from the SFP optical transceiver in the first management port (labeled **C0**) on the Node device management board. Save the cap.
3. Insert the cable connector into the optical transceiver.
4. Connect the other end of that cable to the appropriate port on the first Virtual Chassis. See Table 157 on page 542.
5. Remove the rubber safety cap from the SFP optical transceiver in the second management port (labeled **C1**) on the Node device management board. Save the cap.
6. Insert the cable connector into the optical transceiver.
7. Connect the other end of that cable to the appropriate port on the *second* Virtual Chassis. This should be the same port number that you connected to in Step 4. For example, if you connected the first cable to **ge-0/0/0** on the first Virtual Chassis, you connect the second cable to **ge-0/0/0** on the second Virtual Chassis.
8. Repeat this procedure for each QFX3500 Node device.
9. Secure the cables so that they are not supporting their own weight. Place excess cable out of the way in a neatly coiled loop. Placing fasteners on a loop helps cables maintain their shape.

CAUTION: Do not bend fiber-optic cables beyond their minimum bend radius. An arc smaller than a few inches in diameter can damage the cables and cause problems that are difficult to diagnose.

Do not let fiber-optic cables hang free from the connector. Do not allow fastened loops of cables to dangle, which stresses the cables at the fastening point.

Related Documentation

- Connecting a QFX3500 Node Device to a QFX3008-I Interconnect Device on page 548
- Connecting a QFX3600 Node Device to a Fiber-Based QFX3000-G QFabric System Control Plane Network on page 537

Copyright © 2018, Juniper Networks, Inc.

CHAPTER 37

Cabling the Data Plane for the QFX3000-G QFabric System

- Connecting a QFX5100 Node Device to a QFX3008-I Interconnect Device on page 545
- Connecting a QFX3600 Node Device to a QFX3008-I Interconnect Device on page 547
- Connecting a QFX3500 Node Device to a QFX3008-I Interconnect Device on page 548

Connecting a QFX5100 Node Device to a QFX3008-I Interconnect Device

To form the data plane in a QFX3000-G QFabric system, you connect the QSFP+ uplink ports (labeled **48** through **51**) on the QFX5100 Node device to the QSFP+ ports on the 16-port QSFP+ front cards in a QFX3008-I Interconnect device.

The number of uplink connections from your Node device to your Interconnect devices determines the oversubscription ratio on the Node device (see *Understanding Port Oversubscription on Node Devices*).

CAUTION: For redundancy, each QFX5100 Node device must be connected to *each* QFX3008-I Interconnect device. For example, if you have two QFX3008-I Interconnect devices, then at least one uplink port on each QFX5100 Node device must be connected to each QFX3008-I Interconnect device. If you have four QFX3008-I Interconnect devices, then each uplink port should be connected to a different QFX3008-I Interconnect device. If you are connecting four uplink ports to two QFX3008-I Interconnect devices, we recommend connecting two uplink ports to each Interconnect device, each to a different front card.

Before you begin to cable the QFX3000-G QFabric system data plane:

- Review The Hardware Compatibility Tool for information about the optical interface characteristics.
- Ensure that you have taken the necessary precautions for safe handling of lasers (see "Laser and LED Safety Guidelines and Warnings for the QFX Series" on page 350).

- Ensure you have installed QSFP+ transceivers in each port you are using. See "Installing a Transceiver in a QFX Series Device" on page 709.
- Ensure that you have appropriate fiber-optic cables (see The Hardware Compatibility Tool).

To connect a QFX5100 Node device to a QFX3008-I Interconnect device:

WARNING: **Do not look directly into a fiber-optic transceiver or into the ends of fiber-optic cables. Fiber-optic transceivers and fiber-optic cables connected to transceivers emit laser light that can damage your eyes.**

1. If the fiber-optic cable connector is covered by a rubber safety cap, remove the cap. Save the cap.
2. Insert the cable connector into the optical transceiver.
3. If the connector at the other end of the fiber-optic cable is covered by a rubber safety cap, remove the cap. Save the cap.
4. Remove the rubber safety cap from the QSFP+ optical transceiver on the 16-port QSFP+ front card on the QFX3008-I Interconnect device. Save the cap.
5. Insert the cable connector into the optical transceiver.
6. Secure the cables so that they are not supporting their own weight. Place excess cable out of the way in a neatly coiled loop. Placing fasteners on a loop helps cables maintain their shape.

CAUTION: **Do not bend fiber-optic cables beyond their minimum bend radius. Bending the cables beyond their minimum bend radius can damage the cables and cause problems that are difficult to diagnose.**

Do not let fiber-optic cables hang free from the connector. Do not allow fastened loops of cables to dangle, which stresses the cables at the fastening point.

Related Documentation

- Determining Transceiver Support for QFabric Systems on page 258

Copyright © 2018, Juniper Networks, Inc.

Connecting a QFX3600 Node Device to a QFX3008-I Interconnect Device

To form the data plane in a QFX3000-G QFabric system, you connect the QSFP+ uplink ports (labeled **Q0** through **Q7**) on the QFX3600 Node device to the QSFP+ ports on the 16-port QSFP+ front cards in a QFX3008-I Interconnect device.

NOTE: By default, four ports (labeled **Q0** through **Q3**) are configured for 40-Gbps uplink connections between your QFX3600 Node device and your Interconnect device. Optionally, you can choose to configure the first eight ports (labeled **Q0** through **Q7**) for the uplink connections (see "Configuring the Port Type on QFX3600 Node Devices" on page 714).

CAUTION: For redundancy, each QFX3600 Node device must be connected to each QFX3008-I Interconnect device. For example, if you have two QFX3008-I Interconnect devices, then at least one uplink port on each QFX3600 Node device must be connected to each QFX3008-I Interconnect device. If you are connecting four uplink ports to two QFX3008-I Interconnect devices, we recommend connecting two uplink ports to each Interconnect device, each to a different front card. If you are connecting eight uplink ports to two QFX3008-I Interconnect devices, we recommend connecting four uplink ports to each Interconnect device, each to a different front card.

Before you begin to cable the QFX3000-G QFabric system data plane:

- Review The Hardware Compatibility Tool for information about the optical interface characteristics.
- Ensure that you have taken the necessary precautions for safe handling of lasers (see "Laser and LED Safety Guidelines and Warnings for the QFX Series" on page 350).
- Ensure you have installed QSFP+ transceivers in each port you are using. See "Installing a Transceiver in a QFX Series Device" on page 709.
- Ensure that you have appropriate fiber-optic cables (see The Hardware Compatibility Tool).

To connect a QFX3600 Node device to a QFX3008-I Interconnect device:

WARNING: **Do not look directly into a fiber-optic transceiver or into the ends of fiber-optic cables. Fiber-optic transceivers and fiber-optic cables connected to transceivers emit laser light that can damage your eyes.**

1. If the fiber-optic cable connector is covered by a rubber safety cap, remove the cap. Save the cap.
2. Remove the rubber safety cap from the QSFP+ optical transceiver on the QFX3600 Node device. Save the cap.
3. Insert the cable connector into the optical transceiver.
4. If the connector at the other end of the fiber-optic cable is covered by a rubber safety cap, remove the cap. Save the cap.
5. Remove the rubber safety cap from the QSFP+ optical transceiver on the 16-port QSFP+ front card on the QFX3008-I Interconnect device. Save the cap.
6. Insert the cable connector into the optical transceiver.
7. Secure the cables so that they are not supporting their own weight. Place excess cable out of the way in a neatly coiled loop. Placing fasteners on a loop helps cables maintain their shape.

   CAUTION: **Do not bend fiber-optic cables beyond their minimum bend radius. Bending the cables beyond their minimum bend radius can damage the cables and cause problems that are difficult to diagnose.**

   Do not let fiber-optic cables hang free from the connector. Do not allow fastened loops of cables to dangle, which stresses the cables at the fastening point.

Related Documentation

- Configuring the Port Type on QFX3600 Node Devices on page 714
- Determining Transceiver Support for QFabric Systems on page 258

Connecting a QFX3500 Node Device to a QFX3008-I Interconnect Device

To form the data plane in a QFX3000-G QFabric system, you connect the QSFP+ uplink ports (labeled **Q0** through **Q3**) on the QFX3500 Node device to the QSFP+ ports on the 16-port QSFP+ front cards in a QFX3008-I Interconnect device.

Copyright © 2018, Juniper Networks, Inc.

The number of uplink connections from your Node device to your Interconnect devices determines the oversubscription ratio on the Node device.

CAUTION: **For redundancy, each QFX3500 Node device must be connected to *each* QFX3008-I Interconnect device. For example, if you have two QFX3008-I Interconnect devices, then at least one uplink port on each QFX3500 Node device must be connected to each QFX3008-I Interconnect device. If you have four QFX3008-I Interconnect devices, then each uplink port should be connected to a different QFX3008-I Interconnect device. If you are connecting all four uplink ports to two QFX3008-I Interconnect devices, we recommend connecting two uplink ports to each Interconnect device, each to a different front card.**

Before you begin to cable the QFX3000-G QFabric system data plane:

- Review The Hardware Compatibility Tool for information about the optical interface characteristics.
- Ensure that you have taken the necessary precautions for safe handling of lasers (see "Laser and LED Safety Guidelines and Warnings for the QFX Series" on page 350).
- Ensure you have installed QSFP+ transceivers in each port you are using. See "Installing a Transceiver in a QFX Series Device" on page 709.
- Ensure that you have appropriate fiber-optic cables (see The Hardware Compatibility Tool).

To connect a QFX3500 Node device to a QFX3008-I Interconnect device:

WARNING: **Do not look directly into a fiber-optic transceiver or into the ends of fiber-optic cables. Fiber-optic transceivers and fiber-optic cables connected to transceivers emit laser light that can damage your eyes.**

1. If the fiber-optic cable connector is covered by a rubber safety cap, remove the cap. Save the cap.
2. Remove the rubber safety cap from the QSFP+ optical transceiver on the QFX3500 Node device. Save the cap.
3. Insert the cable connector into the optical transceiver.
4. If the connector at the other end of the fiber-optic cable is covered by a rubber safety cap, remove the cap. Save the cap.
5. Remove the rubber safety cap from the QSFP+ optical transceiver on the 16-port QSFP+ front card on the QFX3008-I Interconnect device. Save the cap.

Copyright © 2018, Juniper Networks, Inc.

6. Insert the cable connector into the optical transceiver.

7. Secure the cables so that they are not supporting their own weight. Place excess cable out of the way in a neatly coiled loop. Placing fasteners on a loop helps cables maintain their shape.

CAUTION: Do not bend fiber-optic cables beyond their minimum bend radius. Bending the cables beyond their minimum bend radius can damage the cables and cause problems that are difficult to diagnose.

Do not let fiber-optic cables hang free from the connector. Do not allow fastened loops of cables to dangle, which stresses the cables at the fastening point.

Related Documentation

- Determining Transceiver Support for QFabric Systems on page 258

Copyright © 2018, Juniper Networks, Inc.

CHAPTER 38

Performing the Initial Configuration

- Performing the QFabric System Initial Setup on a QFX3100 Director Group on page 551

Performing the QFabric System Initial Setup on a QFX3100 Director Group

You must perform the initial setup of the QFX3100 Director group through the console port. (Before configuring the QFX3100 Director group, see "Installing and Connecting a QFX3100 Director Device" on page 377.)

Before you begin connecting and configuring a QFX3100 Director group, set the following parameter values on the console server or PC:

- Baud Rate—9600
- Flow Control—None
- Data—8
- Parity—None
- Stop Bits—1
- DCD State—Disregard

NOTE: **When you use the SecureCRT client to connect to a Director device for the initial setup of a QFabric system, the backspace key does not work. As a workaround, use the Shift+Delete key combination in SecureCRT as a backspace key equivalent or use a different UNIX client to support the backspace key natively.**

The initial setup requires that you specify certain values for your QFabric system. These include:

- Software serial number for your QFabric system (found in the e-mail containing the software serial number that you received from Juniper Networks when you purchased your QFabric system)
- IP addresses and a default gateway IP address for your QFabric system default partition
- IP addresses for your Director group device management ports

Copyright © 2018, Juniper Networks, Inc.

- Range of reserved MAC addresses for your QFabric system (see *Generating the MAC Address Range for a QFabric System* or Activate Your QFabric System for this information)
- Root password for your Director group
- Root password for the QFabric system components such as the Node devices, Interconnect devices, and infrastructure

- Performing an Initial Setup on page 552
- Restoring a Backup Configuration on page 555

Performing an Initial Setup

The initial setup can be performed either manually or by using a previously saved backup configuration.

To connect and configure the QFX3100 Director group manually from the console:

1. Connect the console port of one of the Director devices to a laptop or PC using an RJ-45 to DB-9 rollover cable. An RJ-45 to DB-9 rollover cable is supplied with each QFX3100 Director device. The console (**CONSOLE**) port is located on the front panel of the device.

2. Log in as **root**. If the software booted before you connected to the console port, you might need to press the Enter key for the prompt to appear.

   ```
   dg0 login: root
   ```

   NOTE: The prompt is either dg0 login or dg1 login depending on the Director device to which you connected your cable.

3. For manual configuration or for initial installation, enter **no** when prompted to specify the backup file. The current Director device configuration is displayed.

   ```
   Initial Configuration
   Before you can access the QFabric system, you must complete the initial setup
   of the Director group by using the steps that follow. If the initial setup
   procedure does not complete successfully, log out of the Director device and
   then log back in to restart this setup menu.
   Continue? [y/n]: y
   You may enter the configuration manually or restore from a backup.
   Specify a backup file? [y/n]: n
   Existing local configuration:
   ```

4. Enter the IP addresses and prefixes for both Director devices.

   NOTE: The Director group devices and QFabric system default partition IP addresses must be on the same subnet as your management network.

Copyright © 2018, Juniper Networks, Inc.

```
Please enter the Director Group 0 IP address and prefix: ip address/prefix

Please enter the Director Group 1 IP address and prefix: ip address/prefix

Please enter the Director Group Subnet Mask: subnet mask
```

5. Enter the gateway IP address for the Director group.

```
Please enter the Director Group gateway IP address: gateway ip address
```

6. Enter the default partition IP address. (You will use this address to log in to the QFabric system on subsequent connections.)

```
Please enter the QFabric default partition IP address: ip address
```

7. (Optional) Enter the IPv6 addresses for both Director devices and the gateway IPv6 address for the Director group.

```
Would you like to input IPv6 addresses for Director Group nodes? (y/n): y
Please enter the Director Group 0 IPv6 address or 'y' to use /0: IPv6 address
Please enter the Director Group 1 IPv6 address or 'y' to use /0: IPv6 address
Please enter the Director Group gateway IPv6 address or 'y' to use /0 : IPv6
address
```

8. Enter the MAC address information.

```
Please enter the starting MAC address: mac address

Please enter the number of MAC addresses: number of mac addresses
```

NOTE: The minimum number of MAC addresses accepted is 4000.

9. Enter the QFabric system software serial number.

```
Please enter the QFabric serial ID: serial id
```

10. Create the Director device root password.

```
Please enter a Director device root password: director-device-password
Please re-enter password: director-device password
```

11. Create a password for the QFabric system components.

NOTE: If you need to change the component password after the QFabric system is operational, issue the **device-authentication** statement at the **[edit system]** hierarchy level in the QFabric default partition CLI.

```
Please enter a password for QFabric components (Node devices, Interconnect
devices, and infrastructure): component-password
Please re-enter password: component-password
```

```
Note: please record your passwords for recovery purposes.
```

CAUTION: Carefully save your passwords for future reference, because some cannot be recovered on a QFabric system.

12. Enter the QFabric system platform type.

```
Supported platform types:
1. QFX3000-G
2. QFX3000-M
Please select product type: number corresponding to platform type
```

13. Confirm the initial configuration. Ensure that the information is accurate before proceeding.

```
Does the following configuration appear correct?
    Director Group 0 IPv4/Prefix            [10.94.200.9/24]
    Director Group 1 IPv4/Prefix            [10.94.200.10/24]
    Director Group IPv4 Gateway             [10.94.200.250]
    Director Group 0 IPv6/Prefix            [2000:1:2:3::a5e:c809/64]
    Director Group 1 IPv6/Prefix            [2000:1:2:3::a5e:c80a/64]
    Director Group IPv6 Gateway
[2000:0001:0002:0003:0226:88ff:fe7b:e880]
    QFabric Default Partition (IPv6 address) [2000:1:2:3::0a5e:c802/64]
    QFabric Serial ID                       [qfsn-0123456789]
    Director Device Password                [********]
```

NOTE: Only addresses of the IP version(s) you entered will appear in the configuration.

14. Confirm the initial setup.

```
[y/n]: y
```

CAUTION: Resetting this initial configuration requires assistance from Juniper Networks customer support or "Performing a QFabric System Recovery Installation on the Director Group" on page 841. As a result, make sure you are certain the values you entered are correct before you enter yes.

15. The director device displays the configuration.

```
Saving temporary configuration...
Configuring peer...
Configuring local interfaces...
Configuring interface eth0 with [10.49.214.74/24:10.49.214.254]
Configured interface eth0 with [10.49.214.74/24:10.49.214.254]
```


Copyright © 2018, Juniper Networks, Inc.

```
Configuring QFabric software with an initial pool of 4000 MAC addresses
[00:11:00:00:00:00 - 00:11:00:00:0f:3b]
Configuring QFabric address [10.49.214.150]
Reconfiguring QFabric software static configuration
Applying the new Director device password
Applying the QFabric component password
First install initial configuration, generating and sharing SSH keys.
First install initial configuration, generating SSH keys.
Configuration complete. Director Group services will auto start within 30
seconds.
```

Restoring a Backup Configuration

Before you restore a backup configuration for the Director group:

- You must have a backup configuration file. You create the backup file with the **request system software configuration-backup** command and save it on an external USB flash drive.
- If you need to reinstall the system software, perform that operation first (see "Performing a QFabric System Recovery Installation on the Director Group" on page 841).

To connect and configure the Director group with a backup configuration:

1. Log in as **root**. If the software booted before you connected to the console port, you might need to press the Enter key for the prompt to appear.

   ```
   dg0 login: root
   ```

   NOTE: The prompt is either dg0 login or dg1 login depending on the Director device to which you connected your cable.

2. To use a previously saved backup configuration, enter **yes** when prompted to specify the backup file and then enter the path and filename of the backup configuration.

   ```
   Specify a back up file? [y/n]: y
   ```

   ```
   Please specify the full path of the configuration backup file: path/filename
   ```

3. Confirm the restoration of the configuration from the backup. Ensure that the information is accurate before proceeding.

   ```
   Does the following configuration appear correct?

       Director Group 0 IP/Prefix              [10.49.214.74/24]
       Director Group 1 IP/Prefix              [10.49.214.75/24]
       Director Group Gateway                  [10.49.214.254]
       Starting MAC address                    [00:11:00:00:00:00]
       Number of MAC addresses                 [4000]
       QFabric Default Partition IP            [10.49.214.150]
       QFabric serial ID                       [qfsn-123456789]
       Director Device Password                [********]
   ```

```
QFabric component Password              [********]
Product Type:                           [QFX3000-G]
```

4. Confirm the backup restoration.

```
[y/n]: y
```

The Director device displays the configuration.

```
Saving temporary configuration...
Configuring peer...
Configuring local interfaces...
Configuring interface eth0 with [10.49.214.74/24:10.49.214.254]
Configured interface eth0 with [10.49.214.74/24:10.49.214.254]
Configuring QFabric software with an initial pool of 4000 MAC addresses
[00:11:00:00:00:00 - 00:11:00:00:0f:3b]
Configuring QFabric address [10.49.214.150]
Reconfiguring QFabric software static configuration
Applying the new Director device password
Applying the QFabric component password
Configuration complete. Director Group services will auto start within 30
seconds.
```

Related Documentation

- *Generating the MAC Address Range for a QFabric System*
- *Gaining Access to the QFabric System Through the Default Partition*
- *QFabric System Initial and Default Configuration Information*
- Installing and Connecting a QFX3100 Director Device on page 377
- Performing a QFabric System Recovery Installation on the Director Group on page 841
- *request system software configuration-backup*
- *device-authentication*

Copyright © 2018, Juniper Networks, Inc.

PART 5

Maintenance

- Removing or Replacing a Device on page 559
- Replacing QFX3100 Components on page 587
- Replacing QFX3008-I Components on page 603
- Replacing QFX3500 Components on page 645
- Replacing QFX3600 Components on page 657
- Replacing QFX5100 Components on page 665
- Replacing EX4300 Components on page 681
- Replacing EX4200 Components on page 695
- Replacing Transceivers and Fiber-Optic Cables on page 707
- Routine Maintenance on page 719
- Viewing QFX3100 System Information on page 721
- Viewing QFX3008-I System Information on page 727
- Viewing QFX5100 System Information on page 737
- Viewing QFX3600 System Information on page 749
- Viewing QFX3500 System Information on page 757
- Viewing EX4300 System Information on page 765
- Viewing EX4200 System Information on page 801

Copyright © 2018, Juniper Networks, Inc.

Copyright © 2018, Juniper Networks, Inc.

CHAPTER 39

Removing or Replacing a Device

- Powering Off a QFX3100 Director Device on page 559
- Powering Off an Existing QFabric Node Device on page 560
- Powering Off a QFX3008-I Interconnect Device on page 562
- Adding or Replacing a QFX3100 Director Device in a QFabric System on page 565
- Removing a QFX3100 Director Device from a Rack or Cabinet on page 570
- Adding or Replacing a QFX3008-I Interconnect Device in a QFX3000-G QFabric System on page 571
- Removing a QFX3008-I Interconnect Device from a Rack or Cabinet on page 576
- Adding or Replacing a Node Device in a QFabric Node Group on page 578
- Removing a QFX5100 Device from a Rack or Cabinet on page 583
- Removing a QFX3600 or QFX3600-I Device from a Rack or Cabinet on page 584
- Removing a QFX3500 Device from a Rack or Cabinet on page 585

Powering Off a QFX3100 Director Device

Power off a QFX3100 Director device when:

- The QFX3100 Director needs to be removed from a rack or cabinet
- The device is not active and you want to save power
- You want to isolate the QFX3100 Director

Before you power off the QFX3100 Director device:

- Ensure that you understand how to prevent electrostatic discharge damage. See "Prevention of Electrostatic Discharge Damage" on page 360.

Ensure that you have the following parts and tools available:

- An external management device such as a PC connected to the management network.

To power off a QFX3100 Director device:

1. Log in to the default partition of your QFabric system. See *Gaining Access to the QFabric System Through the Default Partition*.

Copyright © 2018, Juniper Networks, Inc.

2. Shut down the Director device by issuing the **request system halt director-device *director-device-name*** operational mode CLI command. This command shuts down the device gracefully and preserves system state information. A message appears on the console, confirming that the operating system has halted.

3. Observe the power supply faceplate LEDs. The AC power supply LED should turn off.

Related Documentation

- Powering On a QFX3100 Director Device on page 385
- Connecting AC Power to a QFX3100 Director Device on page 383

Powering Off an Existing QFabric Node Device

Use this procedure to gracefully shut down an existing device in a server Node group, redundant server Node group, or network Node group. This orderly process reduces traffic loss on server Node devices and prevents traffic loss on redundant server Node devices and network member devices.

CAUTION: **Do not use the request system halt command to shut down an existing Node device or traffic loss can occur.**

1. Log into the QFabric default partition on the Director device and start the CLI.

```
[root@dg0] # cli
```

2. Discover the device connection status and the alias name (identifier) by issuing the **show fabric administration inventory** command.

```
user@qfabric> show fabric administration inventory
Item                    Identifier              Connection      Configuration
Node group
  NW-NG-0                                       Connected       Configured
  P5502-C                                       Disconnected
    P5502-C                                     Disconnected
  P8189-C                                       Connected       Configured
    P8189-C                                     Connected
  TA3713470056                                  Disconnected
    TA3713470056                                Disconnected
  TR0214080017                                  Disconnected
    TR0214080017                                Disconnected
Interconnect device
  IC-TB3713490033                               Connected       Configured
    TB3713490033/RE0                            Connected
  IC-TB3714010454                               Connected       Configured
    TB3714010454/RE0                            Connected
Fabric manager
  FM-0                                          Connected       Configured
Fabric control
  FC-0                                          Connected       Configured
  FC-1                                          Connected       Configured
Diagnostic routing engine
  DRE-0                                         Connected       Configured
```

 Copyright © 2018, Juniper Networks, Inc.

```
Director group
  0281022011000011                                Connected
  0281032012000018                                Connected
```

The Node device must show as **connected** and **configured** to have an orderly shutdown.

3. Start the orderly shutdown of the Node device by issuing the **request fabric power-off node-device** operational mode command from the QFabric default partition CLI. This command systematically takes the node offline and gracefully shuts down the device while preserving system state information. A message appears on the console or console log, confirming that the operating system has stopped on the device.

   You see the following output after entering the command:

```
root@qfabric> request fabric administration power-off node-device ED1491

STEP 1 of 8 (Acquiring lock):
Acquiring lock to perform this operation
Acquired lock to perform this operation
STEP 2 of 8 (Performing pre-checks):
node-device ED1491 is online
STEP 3 of 8 (Mastership switch-over):
node-device ED1491 is Server Node-group
STEP 4 of 8 (Gracefully offlining the node-device):
node-device is being offlined
node-device is successfully offlined
STEP 5 of 8 (Waiting for convergence):
Waiting for convergence(this will take few minutes)
Convergence complete
STEP 6 of 8 (Powering-off the node-device):
Now, powering-off the node-device
Powered-off the node-device
STEP 7 of 8 (Updating inventory):
Removing the node-device - ED1491 from inventory
node-device - ED1491 is removed from inventory
STEP 8 of 8 (Releasing lock):
Releasing the lock

root@qfabric>
```

   CAUTION: **The final output of the request fabric power-off node-device command is the following message: The device is shutting down and can be removed when the LCDs are off.** Wait at least 3 to 4 minutes after first seeing this message before following the instructions in Step 5 and Step 6 to disconnect the switch.

4. Attach the grounding strap to your bare wrist and to a site ESD point.

5. Disconnect power to the switch by performing one of the following tasks:
   - AC power supply—If the AC power source outlet has a power switch, set it to the OFF (O) position. If the AC power source outlet does not have a power switch, gently pull out the male end of the power cord connected to the power source outlet.
   - DC power supply—Switch the circuit breaker on the panel board that services the DC circuit to the OFF position.
6. Remove the power source cable from the power supply faceplate:
   - AC power supply—Remove the power cord from the power supply faceplate by detaching the power cord retainer and gently pulling out the female end of the power cord connected to the power supply faceplate.
   - DC power supply—Remove the screws securing the ring lugs attached to the power source cables to the power supply using the screwdriver, and remove the power source cables from the power supply. Replace the screws on the terminals and tighten them.

Related Documentation

- Removing a QFX5100 Device from a Rack or Cabinet on page 583
- Removing a QFX3600 or QFX3600-I Device from a Rack or Cabinet on page 584
- Removing a QFX3500 Device from a Rack or Cabinet on page 585

Powering Off a QFX3008-I Interconnect Device

To gracefully shut down a QFX3008-I Interconnect device on a QFX3000-G QFabric system:

1. Log into the QFabric default partion on the Director device and start the CLI.

```
[root@dg0] # cli
```

2. Discover the device connection status and the alias name (identifier) by issuing the **show fabric administration inventory** command.

```
user@qfabric> show fabric administration inventory
Item                    Identifier              Connection      Configuration
Ungrouped Node device
  Node6                 BBAK8979                Disconnected
Node group
  P3359-C                                       Connected       Configured

    P3359-C                                     Connected

  P3865-C                                       Connected       Configured

    P3865-C                                     Connected

  RSNG-1                                        Connected       Configured

    Node-3              BBAK8276                Connected
    Node-4              BBAK8273                Connected
```


Copyright © 2018, Juniper Networks, Inc.

```
  NW-NG-0                                         Connected       Configured

    Node-0              BBAK8309                  Connected
    Node-1              BBAK8283                  Connected
Interconnect device
  IC-F1032                                        Connected       Configured

    F1032/RE0                                     Connected

    F1032/RE1                                     Connected

  IC-F1092                                        Connected       Configured

    F1092/RE0                                     Connected

    F1092/RE1                                     Connected

Fabric manager
  FM-0                                            Connected       Configured

Fabric control
  FC-0                                            Connected       Configured

  FC-1                                            Connected       Configured
Diagnostic routing engine
  DRE-0                                           Connected       Configured
Director group
  0281112011000023                                Connected

  0281112011000082                                Connected
```

The Interconnect device must show as **connected** and **configured** in order to have an orderly shutdown.

3. Start the orderly shutdown of the QFX3008-I Interconnect device by issuing the **request fabric power-off interconnect-device** ***serial-id*** **|** ***alias-name*** operational mode command from the QFabric default partition CLI. This command systematically takes the interconnect offline and gracefully shuts down the device while preserving system state information. A message appears on the console or console log, confirming that the operating system has stopped on the device.

   You see output similar to the following after entering the command:

```
user@qfabric> show fabric administration inventory
Item                    Identifier              Connection      Configuration
Ungrouped Node device
  Node6                 BBAK8979                Disconnected
Node group
  P3359-C                                         Connected       Configured

    P3359-C                                       Connected

  P3865-C                                         Connected       Configured

    P3865-C                                       Connected

  RSNG-1                                          Connected       Configured
```

```
    Node-3              BBAK8276                Connected
    Node-4              BBAK8273                Connected
  NW-NG-0                                       Connected       Configured

    Node-0              BBAK8309                Connected
    Node-1              BBAK8283                Connected
Interconnect device
  IC-F1032                                      Connected       Configured

    F1032/RE0                                   Connected

    F1032/RE1                                   Connected

  IC-F1072                                      Connected
    F1072/RE0                                   Connected

    F1072/RE1                                   Connected

Fabric manager
  FM-0                                          Connected       Configured

Fabric control
  FC-0                                          Connected       Configured

  FC-1                                          Connected       Configured
Diagnostic routing engine
  DRE-0                                         Connected       Configured
Director group
  0281112011000023                              Connected

  0281112011000082                              Connected
```

CAUTION: The final output of the **request fabric administration power-off interconnect-device** command is the following message: **The device is shutting down and can be removed when the LCDs are off.** Wait at least 3 to 4 minutes after first seeing this message before following the instructions in Step 5 to power off the device.

4. Attach the ESD grounding strap to your bare wrist, and connect the strap to the ESD point on the chassis.

5. Set the wiring tray switch to the OFF (O) position. Observe the wiring tray LEDs. The power supply LEDs should turn off (appear unlit). Repeat this step for the second wiring tray.

NOTE: After you power off a wiring tray, wait for at least 60 seconds before you turn it back on. After you power on a wiring tray, wait for at least 60 seconds before you turn it back off.

Copyright © 2018, Juniper Networks, Inc.

NOTE: The power supplies in a QFX3008-I Interconnect device continue to use a small amount of power when the C19 wiring tray power switch is in the off position. The status LEDs on each power supply blink amber because the power supply fans are not operating. This is expected behavior.

Related Documentation

- Connecting AC Power to a QFX3008-I Interconnect Device with Single-Phase Wiring Trays on page 411
- Connecting AC Power to a QFX3008-I Interconnect Device with Three-Phase Delta Wiring Trays on page 418
- Connecting AC Power to a QFX3008-I Interconnect Device with Three-Phase Wye Wiring Trays on page 422

Adding or Replacing a QFX3100 Director Device in a QFabric System

The Director group in a QFabric system automatically recognizes when devices are added or replaced in the QFabric system. The Director group sends each device its own portion of the Junos OS configuration and adds them to the QFabric system inventory.

Before you replace a QFX3100 Director device in a QFabric system:

- Ensure that you have taken the necessary precautions to prevent electrostatic discharge (ESD) damage. See "Prevention of Electrostatic Discharge Damage" on page 360.
- If possible, install the replacement QFX3100 Director device and connect it to power to minimize the amount of time it takes to replace the device.

Ensure that you have the following parts and tools available to replace the device:

- An ESD grounding strap
- An external management device such as a PC
- An RJ-45 to DB-9 rollover cable to connect the external management device to the console port
- A 4-gigabyte (GB) USB flash drive

- Powering Off and Removing the Old QFX3100 Director Device on page 566
- Update the New QFX3100 Director Device Software on page 566
- Adding the New QFX3100 Director Device to the QFabric System on page 567

Powering Off and Removing the Old QFX3100 Director Device

If you are replacing a device, power off the QFX3100 Director device that you will remove from the QFabric system:

1. Log in to the default partition of your QFabric system. See *Gaining Access to the QFabric System Through the Default Partition*.

2. Shut down the Director device by issuing the **request system halt director-device *director-device-name*** operational mode CLI command. This command shuts down the device gracefully and preserves system state information. A message appears on the console, confirming that the operating system has halted.

3. Observe the power supply faceplate LEDs. The AC power supply LED should turn off.

4. Uncable the old QFX3100 Director device. Label each cable as you remove it, so that you can easily connect the replacement Director device.

Update the New QFX3100 Director Device Software

To update the new QFX3100 Director device software:

1. Perform a recovery installation to upgrade the software to the same version that is on the existing Director device. See "Performing a QFabric System Recovery Installation on the Director Group" on page 841.

   NOTE: **You do not need to complete the steps to restore the backup configuration file. The Director device will receive the correct configuration from the other QFX3100 Director device.**

2. Shut down the Director device by issuing the **request system halt director-device *director-device-name*** operational mode CLI command. This command shuts down the device gracefully and preserves system state information. A message appears on the console, confirming that the operating system has halted.

3. Observe the power supply faceplate LEDs. The AC power supply LED should turn off.

Copyright © 2018, Juniper Networks, Inc.

Adding the New QFX3100 Director Device to the QFabric System

To add a new QFX3100 Director device to the QFabric system:

1. Install the new device and connect the QFX3100 Director device to power. See "Installing and Connecting a QFX3100 Director Device" on page 377 for more information about mounting the device in a rack and connecting the device to power.

2. Interconnect the two QFX3100 Director devices for control plane redundancy. See "Connecting QFX3100 Director Devices in a Director Group" on page 500.

3. Connect the QFX3100 Director device to the control plane network. See "Connecting QFX3100 Director Devices to a Copper-Based QFX3000-G QFabric System Control Plane Network" on page 502, "Connecting QFX3100 Director Devices to a Fiber-Based QFX3000-G QFabric System Control Plane Network" on page 524, *Connecting QFX3100 Director Devices to a Copper-Based QFX3000-M QFabric System Control Plane Network*, or *Connecting QFX3100 Director Devices to a Fiber-Based QFX3000-M QFabric System Control Plane Network*.

4. Power on the new Director device. The new Director device will synchronize its database with the existing Director device. See "Powering On a QFX3100 Director Device" on page 385 for more information about powering on the Director device.

5. Verify that the QFX3100 Director device has been added to the QFabric system using the *show fabric administration inventory director-group status* operational-mode CLI command from the QFabric default partition CLI.

   You see the following output (or something similar) after entering the command:

```
Director Group Status Thu Aug  2 17:36:34 UTC 2012

 Member Status Role     Mgmt Address    CPU Free Memory VMs Up Time
 ------ ------ -------- --------------- --- ----------- --- -------------
 dg0    online master   10.94.215.38    8%  15191684k   4   6 days, 06:24 hrs

 dg1    online backup   10.94.215.39    7%  17733160k   3   6 days, 06:24 hrs


 Member Device Id/Alias  Status  Role
 ------ ---------------- ------- ---------
 dg0    0281052011000001 online  master

  Master Services
  ---------------
  Database Server                online
  Load Balancer Director         online
  QFabric Partition Address      online

  Director Group Managed Services
  -------------------------------
  Shared File System             online
  Network File System            online
  Virtual Machine Server         online
```

```
 Load Balancer/DHCP             online

 Hard Drive Status
 ----------------
 Physical ID:0                  online
 Physical ID:1                  online


 Size  Used Avail Used% Mounted on
 ----  ---- ----- ----- ----------
 423G 9.4G 391G  3%   /
 99M  16M  79M   17%  /boot
 93G  11G  83G   12%  /pbdata

 Director Group Processes
 ------------------------
 Director Group Manager         online
 Partition Manager              online
 Software Mirroring             online
 Shared File System master      online
 Secure Shell Process           online
 Network File System            online
 DHCP Server master             online     master

 FTP Server                     online
 Syslog                         online
 Distributed Management         online
 SNMP Trap Forwarder            online
 SNMP Process                   online
 Platform Management            online

 Interface Link Status
 ---------------------
 Management Interface           up
 Control Plane Bridge           up
 Control Plane LAG              up
 CP Link [0/2]                  up
 CP Link [0/1]                  up
 CP Link [0/0]                  up
 CP Link [1/2]                  down
 CP Link [1/1]                  down
 CP Link [1/0]                  down
 Crossover LAG                  up
 CP Link [0/3]                  up
 CP Link [1/3]                  up

Member Device Id/Alias  Status  Role
------ ---------------- ------- ---------
dg1    0281052011000032 online  backup

 Director Group Managed Services
 -------------------------------
 Shared File System             online
 Network File System            online
 Virtual Machine Server         online
 Load Balancer/DHCP             online

 Hard Drive Status
 ----------------
 Physical ID:0                  online
 Physical ID:1                  online
```


Copyright © 2018, Juniper Networks, Inc.

```
Size  Used Avail Used% Mounted on
----  ---- ----- ----- ----------
423G 9.8G 391G  3%   /
99M  16M  79M   17%  /boot
93G  11G  83G   12%  /pbdata

Director Group Processes
------------------------
Director Group Manager         online
Partition Manager              online
Software Mirroring             online
Shared File System master      online
Secure Shell Process           online
Network File System            online
DHCP Server master             online     backup

FTP Server                     online
Syslog                         online
Distributed Management         online
SNMP Trap Forwarder            online
SNMP Process                   online
Platform Management            online

Interface Link Status
---------------------
Management Interface           up
Control Plane Bridge           up
Control Plane LAG              up
CP Link [0/2]                  up
CP Link [0/1]                  up
CP Link [0/0]                  up
CP Link [1/2]                  down
CP Link [1/1]                  down
CP Link [1/0]                  down
Crossover LAG                  up
CP Link [0/3]                  up
CP Link [1/3]                  up
```

6. Verify that the Routing Engine services are running on the QFX3100 Director device using the *show fabric administration inventory infrastructure* operational-mode CLI command from the QFabric default partition CLI.

   You see the following output (or something similar) after entering the command:

```
dg0:
Routing Engine Type     Hostname                      PID      CPU-Use(%)
---------------------------------------------------------------------------
Fabric manager          FM-0                          9832      1.0
Network Node group      QFabric_default_NW-NG-1_RE1   24633     4.2
Fabric control          QFabric_default_FC-1_RE0      25374     1.8
Diagnostic              QFabric_DRE                   6789      1.3

dg1:
Routing Engine Type     Hostname                      PID      CPU-Use(%)
---------------------------------------------------------------------------
Fabric manager          FM-1                          572       1.6
Network Node group      QFabric_default_NW-NG-0_RE0   19217     7.8
Fabric control          QFabric_default_FC-0_RE0      20071     1.9
```

Related Documentation

- *Example: Configuring the Virtual Chassis for a Copper-Based QFX3000-G QFabric System Control Plane*
- *Example: Configuring EX Series Switches for the QFX3000-M QFabric System Control Plane*
- Removing a QFX3100 Director Device from a Rack or Cabinet on page 570

Removing a QFX3100 Director Device from a Rack or Cabinet

If you need to relocate an installed QFX3100 Director device, use the procedure described in this topic. (The remainder of this topic uses “rack” to mean “rack or cabinet.”)

NOTE: **When you remove multiple devices from a rack, remove the device in the top of the rack first and proceed to remove the rest of the devices from top to bottom.**

Before removing a QFX3100 Director device from a rack:

- Ensure that the rack is stable and secured to the building.
- Ensure that there is enough space to place the removed QFX3100 Director device in its new location and along the path to the new location.
- Read “General Safety Guidelines and Warnings” on page 329.
- Ensure that the QFX3100 Director device has been safely powered off (see “Powering Off a QFX3100 Director Device” on page 559) and that you have unplugged (disconnected) the power cords.
- Ensure that you have disconnected any cables or wires attached to the QFX3100 Director device ports.

Ensure that you have the following parts and tools available:

- A Phillips (+) screwdriver, number 2 or number 3, depending on the size of your rack mounting screws, for mounting the QFX3100 Director device on the rack.

To remove a QFX3100 Director device from a rack or cabinet:

1. Use the screwdriver to remove the mounting screws that attach the chassis front-mounting brackets to the rack or cabinet.
2. Place the removed screws in a labeled bag. You will need them when you reinstall the chassis.
3. Lift the QFX3100 Director device from the rack or cabinet and transport it to your desired new location.

Copyright © 2018, Juniper Networks, Inc.

Related Documentation

- Mounting a QFX3100 Director Device on Two Posts in a Rack or Cabinet on page 380
- Mounting a QFX3100 Director Device on Four Posts in a Rack or Cabinet on page 381

Adding or Replacing a QFX3008-I Interconnect Device in a QFX3000-G QFabric System

The Director group in a QFX3000-G QFabric system automatically recognizes when devices are added or replaced in the QFabric system. The Director group sends each device its own portion of the Junos OS configuration and adds them to the QFabric system inventory. You can install up to four QFX3008-I Interconnect devices in a QFX3000-G QFabric system.

- Before You Begin on page 571
- Powering Off a QFX3008-I Interconnect Device on page 571
- Adding a New QFX3008-I Interconnect Device to the QFabric System on page 574

Before You Begin

Before you add or replace a QFX3008-I Interconnect device in a QFX3000-G QFabric system:

- Ensure that you have taken the necessary precautions to prevent electrostatic discharge (ESD) damage. See "Prevention of Electrostatic Discharge Damage" on page 360.
- If possible, install the replacement QFX3008-I Interconnect device and connect it to power to minimize the amount of time it will take to replace the device.

Ensure that you have the following parts and tools available to power off the device:

- An ESD grounding strap
- An external management device such as a PC

Powering Off a QFX3008-I Interconnect Device

To gracefully shut down a QFX3008-I Interconnect device on a QFX3000-G QFabric system:

1. Log into the QFabric default partion on the Director device and start the CLI.

```
[root@dg0] # cli
```

2. Discover the device connection status and the alias name (identifier) by issuing the **show fabric administration inventory** command.

```
user@qfabric> show fabric administration inventory
Item                    Identifier              Connection      Configuration
Ungrouped Node device
  Node6                 BBAK8979                Disconnected
Node group
  P3359-C                                       Connected       Configured

    P3359-C                                     Connected
```

```
  P3865-C                                       Connected       Configured

    P3865-C                                     Connected

  RSNG-1                                        Connected       Configured

    Node-3              BBAK8276                Connected
    Node-4              BBAK8273                Connected
  NW-NG-0                                       Connected       Configured

    Node-0              BBAK8309                Connected
    Node-1              BBAK8283                Connected
Interconnect device
  IC-F1032                                      Connected       Configured

    F1032/RE0                                   Connected

    F1032/RE1                                   Connected

  IC-F1092                                      Connected       Configured

    F1092/RE0                                   Connected

    F1092/RE1                                   Connected

Fabric manager
  FM-0                                          Connected       Configured

Fabric control
  FC-0                                          Connected       Configured

  FC-1                                          Connected       Configured
Diagnostic routing engine
  DRE-0                                         Connected       Configured
Director group
  0281112011000023                              Connected

  0281112011000082                              Connected
```

The Interconnect device must show as **connected** and **configured** in order to have an orderly shutdown.

3. Start the orderly shutdown of the QFX3008-I Interconnect device by issuing the **request fabric power-off interconnect-device** ***serial-id*** **|** ***alias-name*** operational mode command from the QFabric default partition CLI. This command systematically takes the interconnect offline and gracefully shuts down the device while preserving system state information. A message appears on the console or console log, confirming that the operating system has stopped on the device.

   You see output similar to the following after entering the command:

```
user@qfabric> show fabric administration inventory
Item                    Identifier              Connection      Configuration
Ungrouped Node device
  Node6                 BBAK8979                Disconnected
Node group
  P3359-C                                       Connected       Configured
```

 Copyright © 2018, Juniper Networks, Inc.

```
    P3359-C                                     Connected

  P3865-C                                       Connected       Configured

    P3865-C                                     Connected

  RSNG-1                                        Connected       Configured

    Node-3              BBAK8276                Connected
    Node-4              BBAK8273                Connected
  NW-NG-0                                       Connected       Configured

    Node-0              BBAK8309                Connected
    Node-1              BBAK8283                Connected
Interconnect device
  IC-F1032                                      Connected       Configured

    F1032/RE0                                   Connected

    F1032/RE1                                   Connected

  IC-F1072                                      Connected
    F1072/RE0                                   Connected

    F1072/RE1                                   Connected

Fabric manager
  FM-0                                          Connected       Configured

Fabric control
  FC-0                                          Connected       Configured

  FC-1                                          Connected       Configured
Diagnostic routing engine
  DRE-0                                         Connected       Configured
Director group
  0281112011000023                              Connected

  0281112011000082                              Connected
```

CAUTION: The final output of the **request fabric administration power-off interconnect-device** command is the following message: **The device is shutting down and can be removed when the LCDs are off.** Wait at least 3 to 4 minutes after first seeing this message before following the instructions in Step 5 to power off the device.

4. Attach the ESD grounding strap to your bare wrist, and connect the strap to the ESD point on the chassis.

5. Set the wiring tray switch to the OFF (O) position. Observe the wiring tray LEDs. The power supply LEDs should turn off (appear unlit). Repeat this step for the second wiring tray.

NOTE: After you power off a wiring tray, wait for at least 60 seconds before you turn it back on. After you power on a wiring tray, wait for at least 60 seconds before you turn it back off.

NOTE: The power supplies in a QFX3008-I Interconnect device continue to use a small amount of power when the C19 wiring tray power switch is in the off position. The status LEDs on each power supply blink amber because the power supply fans are not operating. This is expected behavior.

See Also

- Connecting AC Power to a QFX3008-I Interconnect Device with Single-Phase Wiring Trays on page 411
- Connecting AC Power to a QFX3008-I Interconnect Device with Three-Phase Delta Wiring Trays on page 418
- Connecting AC Power to a QFX3008-I Interconnect Device with Three-Phase Wye Wiring Trays on page 422

Adding a New QFX3008-I Interconnect Device to the QFabric System

To add a new QFX3008-I Interconnect device to the QFabric system:

1. Install the new device and connect the QFX3008-I Interconnect device to power. See "Installing and Connecting a QFX3008-I Interconnect Device" on page 389 for more information about mounting the device in a rack and connecting the device to power.

2. Connect the new QFX3008-I Interconnect device to the QFX3000-G QFabric system control plane network. See "Connecting a QFX3008-I Interconnect Device to a Copper-Based QFX3000-G QFabric System Control Plane Network" on page 505 or "Connecting a QFX3008-I Interconnect Device to a Fiber-Based QFX3000-G QFabric System Control Plane Network" on page 528.

Copyright © 2018, Juniper Networks, Inc.

3. Power on the new QFX3008-I Interconnect device:

   a. Attach the ESD grounding strap to your bare wrist and connect the strap to the ESD point on the chassis.

   b. Ensure that the power supplies are fully inserted in the chassis.

   c. Ensure that the source power cords are installed correctly for each wiring tray, and the wiring trays are fully inserted in the chassis.

   d. Switch on the site circuit breakers.

   e. Set a wiring tray's switch to the ON (|) position. Observe the power supply and wiring tray faceplate LEDs. If the wiring trays are installed correctly and functioning normally, the LEDs light green and remain constantly lit.

   f. Repeat Step 5 for the second wiring tray installed in the device.

4. The QFabric system upgrades the QFX3008-I Interconnect device to the version of software installed on the QFX3100 Director devices. Verify that the QFX3008-I Interconnect device has been upgraded to the correct version of software using the **show version component all** operational mode command from the QFabric default partition CLI.

   NOTE: **It takes some time for the software upgrade to occur. Do not proceed to the next step until the show version component all command verifies that the software has been upgraded.**

5. Verify that the QFX3008-I Interconnect device has been added to the QFX3000-G QFabric system using the *show fabric administration inventory interconnect-devices* operational mode command from the QFabric default partition CLI.

6. Write down the serial number of the new device from the output of the *show fabric administration inventory interconnect-devices* command.

7. From the QFabric director, enter the following configuration mode CLI commands to remove the previous Interconnect device from the inventory of QFabric system components and associate the serial number of the new device with the alias of the previous device.

```
root@fabric# delete fabric aliases interconnect-device
old-serial-numberalias-name
root@fabric# set fabric aliases interconnect-device new-serial-numberalias-name
```

8. Commit the changes using the **commit** command, which sends the configuration of the old device to the new device.

9. Connect the QFX3008-I Interconnect device to each Node device for data plane interconnection. See "Connecting a QFX3600 Node Device to a QFX3008-I Interconnect Device" on page 547 or "Connecting a QFX3500 Node Device to a QFX3008-I Interconnect Device" on page 548.

10. Verify the data plane interconnection using the *show chassis fabric connectivity* operational mode command from the QFabric default partition CLI. Repeat this command if necessary until the new device is shown in the output.

11. Remove the previous QFX3008-I Interconnect device from the inventory of QFabric system components using the **request fabric administration remove interconnect-device *device-name*** operational mode command from the QFabric default partition CLI.

Related Documentation

- *Example: Configuring the Virtual Chassis for a Copper-Based QFX3000-G QFabric System Control Plane*
- Removing a QFX3008-I Interconnect Device from a Rack or Cabinet on page 576

Removing a QFX3008-I Interconnect Device from a Rack or Cabinet

If you want to move an installed QFX3008-I Interconnect device to another location, you need to remove it from the rack or cabinet in which it is installed. An installed device rests on the mounting shelf. In a four-post rack, the front-mounting brackets ("ears") attached to the chassis are bolted to the rack. In a two-post rack, the mid-mounting brackets ("ears") attached to the chassis are bolted to the rack.

NOTE: **When you remove multiple devices from a rack or cabinet, remove the device in the top of the rack or cabinet first and proceed to remove the rest of the switches from top to bottom.**

Before removing a QFX3008-I Interconnect device from a rack or a cabinet:

- Ensure that the rack or cabinet is stable and secured to the building.
- Ensure that there is enough space to place the removed device in its new location and along the path to the new location.
- Read "General Safety Guidelines and Warnings" on page 329, with particular attention to "Chassis Lifting Guidelines for a QFX3008-I Interconnect Device" on page 338.
- Ensure that the device has been safely powered off (see "Powering Off a QFX3008-I Interconnect Device" on page 562) and that you have unplugged (disconnected) the power cords. Remove three-phase wiring trays from the chassis and move them

 Copyright © 2018, Juniper Networks, Inc.

separately, leaving the power cords attached to the wiring trays (see "Removing a Wiring Tray from a QFX3008-I Interconnect Device" on page 608).

- Ensure that you have disconnected any cables or wires attached to the device.

Ensure that you have the following parts and tools available to remove the switch:

- A Phillips (+) screwdriver, number 2. You might also need a number 3 Phillips (+) screwdriver, depending on the size of your rack mounting screws.
- A mechanical lift rated for at least 750 lb (340.2 kg). If you do not have a lift rated for 750 lb (341 kg), you must remove all components from the chassis and use a lift rated for at least 250 lb (114 kg). The weight of an empty QFX3008-I Interconnect device and midplane is approximately 205 lb (93 kg).

WARNING: **Because of the QFX3008-I Interconnect device size and weight, we require the use of a mechanical lift to install the QFX3008-I Interconnect device in a rack or cabinet or to move the device from one location to another.**

CAUTION: **The handles on the QFX3008-I Interconnect device are designed to help maneuver the chassis from the mechanical lift to the mounting shelves in the rack. Do not attempt to lift the chassis using the handles.**

To remove a QFX3008-I Interconnect device from a rack or cabinet:

1. Use the appropriate Phillips (+) screwdriver to remove the mounting screws that attach the chassis front-mounting brackets to the rack or cabinet.
2. Place the removed screws in a labeled bag. You will need them when you reinstall the chassis.
3. Move the lift to the rack and position it so that its platform is centered about 0.5 in. (1.27 cm) below the bottom of the device chassis and as close to it as possible.
4. Carefully slide the device from the mounting shelves attached to the rack onto the lift.
5. Use the number 2 Phillips (+) screwdriver to remove the mounting hardware from the rack.
6. Use the lift to transport the device to its new location.

Related Documentation

- Installing and Connecting a QFX3008-I Interconnect Device on page 389

Adding or Replacing a Node Device in a QFabric Node Group

Use this set of procedures to add or replace a node device in a:

- Network Node group
- Server Node group
- Redundant server Node group

The Director group in a QFabric system automatically recognizes when devices are added or replaced in the QFabric system. The Director group sends each device its own portion of the Junos OS configuration and adds the device to the QFabric system inventory.

Eligible devices in a Node group are QFX5100-48S, QFX5100-48T, QFX5100-24Q, QFX3600, and QFX3500. When replacing a Node device, it is not necessary to replace the existing device with the same switch model.

CAUTION: **The QFabric system might experience data loss when replacing a device in a server Node group during this procedure. Devices in redundant server Node groups and Network Node groups should not experience data loss.**

- Before You Begin on page 578
- Powering Off an Existing QFabric Node Device on page 579
- Adding a New Node Device to a Node Group in a QFabric System on page 581

Before You Begin

Before adding a new device or replacing an existing node device, review the following checklist:

- If the switch you plan to install as a Node device was previously used as a standalone switch and had advanced feature licenses installed, you can transfer those licenses to a new device. Contact your Juniper Networks sales representative for more information.
- Ensure interfaces are grouped into a LAG interface for rerouting of traffic when a device is unavailable.
- Ensure all devices have an alias name configured before starting the replacement process. See *Gaining Access to the QFabric System Through the Default Partition* and *Configuring Aliases for the QFabric System*.

TIP: **By default the Node devices are identified using their hardware serial number. Aliases take the place of the hardware serial numbers and help to simplify configuration tasks. The chassis serial number ID label is located in different locations depending upon the QFX switch model. See the hardware guide for your QFX switch model.**

Copyright © 2018, Juniper Networks, Inc.

- Follow all standard installation safety guidelines.
  - Ensure that you have taken the necessary precautions to prevent electrostatic discharge (ESD) damage. See "Prevention of Electrostatic Discharge Damage" on page 360.
  - Ensure that you do not need to forward traffic through the device.
  - If possible, rack mount and install the new or replacement Node device to minimize the amount of time it takes to replace the device.
- Ensure that you have the following parts and tools available:
  - An ESD grounding strap
  - An external management device such as a PC
  - An RJ-45 to DB-9 rollover cable to connect the external management device to the console port

Powering Off an Existing QFabric Node Device

Use this procedure to gracefully shut down an existing device in a server Node group, redundant server Node group, or network Node group. This orderly process reduces traffic loss on server Node devices and prevents traffic loss on redundant server Node devices and network member devices.

CAUTION: **Do not use the request system halt command to shut down an existing Node device or traffic loss can occur.**

1. Log into the QFabric default partition on the Director device and start the CLI.

```
[root@dg0] # cli
```

2. Discover the device connection status and the alias name (identifier) by issuing the **show fabric administration inventory** command.

```
user@qfabric> show fabric administration inventory
Item                    Identifier              Connection      Configuration
Node group
  NW-NG-0                                       Connected       Configured
  P5502-C                                       Disconnected
    P5502-C                                     Disconnected
  P8189-C                                       Connected       Configured
    P8189-C                                     Connected
  TA3713470056                                  Disconnected
    TA3713470056                                Disconnected
  TR0214080017                                  Disconnected
    TR0214080017                                Disconnected
Interconnect device
  IC-TB3713490033                               Connected       Configured
    TB3713490033/RE0                            Connected
  IC-TB3714010454                               Connected       Configured
    TB3714010454/RE0                            Connected
Fabric manager
```

```
  FM-0                                          Connected       Configured
Fabric control
  FC-0                                          Connected       Configured
  FC-1                                          Connected       Configured
Diagnostic routing engine
  DRE-0                                         Connected       Configured
Director group
  0281022011000011                              Connected
  0281032012000018                              Connected
```

The Node device must show as **connected** and **configured** to have an orderly shutdown.

3. Start the orderly shutdown of the Node device by issuing the **request fabric power-off node-device** operational mode command from the QFabric default partition CLI. This command systematically takes the node offline and gracefully shuts down the device while preserving system state information. A message appears on the console or console log, confirming that the operating system has stopped on the device.

   You see the following output after entering the command:

```
root@qfabric> request fabric administration power-off node-device ED1491

STEP 1 of 8 (Acquiring lock):
Acquiring lock to perform this operation
Acquired lock to perform this operation
STEP 2 of 8 (Performing pre-checks):
node-device ED1491 is online
STEP 3 of 8 (Mastership switch-over):
node-device ED1491 is Server Node-group
STEP 4 of 8 (Gracefully offlining the node-device):
node-device is being offlined
node-device is successfully offlined
STEP 5 of 8 (Waiting for convergence):
Waiting for convergence(this will take few minutes)
Convergence complete
STEP 6 of 8 (Powering-off the node-device):
Now, powering-off the node-device
Powered-off the node-device
STEP 7 of 8 (Updating inventory):
Removing the node-device - ED1491 from inventory
node-device - ED1491 is removed from inventory
STEP 8 of 8 (Releasing lock):
Releasing the lock

root@qfabric>
```

   CAUTION: **The final output of the request fabric power-off node-device command is the following message: The device is shutting down and can be removed when the LCDs are off.** Wait at least 3 to 4 minutes after first seeing this message before following the instructions in Step 5 and Step 6 to disconnect the switch.

4. Attach the grounding strap to your bare wrist and to a site ESD point.

Copyright © 2018, Juniper Networks, Inc.

5. Disconnect power to the switch by performing one of the following tasks:
   - AC power supply—If the AC power source outlet has a power switch, set it to the OFF (O) position. If the AC power source outlet does not have a power switch, gently pull out the male end of the power cord connected to the power source outlet.
   - DC power supply—Switch the circuit breaker on the panel board that services the DC circuit to the OFF position.
6. Remove the power source cable from the power supply faceplate:
   - AC power supply—Remove the power cord from the power supply faceplate by detaching the power cord retainer and gently pulling out the female end of the power cord connected to the power supply faceplate.
   - DC power supply—Remove the screws securing the ring lugs attached to the power source cables to the power supply using the screwdriver, and remove the power source cables from the power supply. Replace the screws on the terminals and tighten them.

See Also

- Removing a QFX5100 Device from a Rack or Cabinet on page 583
- Removing a QFX3600 or QFX3600-I Device from a Rack or Cabinet on page 584
- Removing a QFX3500 Device from a Rack or Cabinet on page 585

Adding a New Node Device to a Node Group in a QFabric System

To add a new device to a server Node group, redundant server Node group, or network Node group in a QFabric system:

1. Ensure that each Node device is set to Node device mode. By default, the QFX5100, QFX3500, and QFX3600 devices are configured in standalone mode. You perform this step using the console (**CON**) port on the new Node device. Leave the preexisting Node devices powered on. See *Converting the Device Mode for a QFabric System Component*.
2. Shut down the new or replacement Node device using the **request fabric administration power-off node-device** command.

   ```
   user@host> request fabric administration power-off node-device
   ```

3. Disconnect the power on the new Node device.
4. Connect the new Node device to the QFabric system control plane network. See:
   - Connecting a QFX5100 Node Device to a Copper-Based QFX3000-G QFabric System Control Plane Network on page 510
   - Connecting a QFX5100 Node Device to a Fiber-Based QFX3000-G QFabric System Control Plane Network on page 533

- Connecting a QFX3600 Node Device to a Copper-Based QFX3000-G QFabric System Control Plane Network on page 512
- Connecting a QFX3600 Node Device to a Fiber-Based QFX3000-G QFabric System Control Plane Network on page 537
- Connecting a QFX3500 Node Device to a Copper-Based QFX3000-G QFabric System Control Plane Network on page 515
- Connecting a QFX3500 Node Device to a Fiber-Based QFX3000-G QFabric System Control Plane Network on page 540

5. Connect power to the new device to connect to the fabric. For information on connecting power for your QFX switch model, see the appropriate QFX hardware guide.

   The QFabric system begins to upgrade the new device or to the version of software installed on the QFX3100 Director devices.

6. Verify that the new device has been upgraded to the correct version of software using the **show version component all** operational mode command from the QFabric default partition CLI.

   NOTE: It takes some time for the software upgrade to occur. Do not proceed to the next step until the show version component all command verifies that the software has been upgraded.

7. Verify that the new device is inserted into the fabric using the **show fabric administration inventory node-devices** operational mode command from the QFabric default partition CLI.

```
user@qfabric> show fabric administration inventory
Item                    Identifier              Connection      Configuration
Node group
  NW-NG-0                                       Connected       Configured
  P5502-C                                       Disconnected
    P5502-C                                     Disconnected
  P8207-C                                       Connected       Configured
    P8207-C                                     Connected
  TA3713470056                                  Disconnected
    TA3713470056                                Disconnected
  TR0214080017                                  Disconnected
    TR0214080017                                Disconnected
Interconnect device
  IC-TB3713490033                               Connected       Configured
    TB3713490033/RE0                            Connected
  IC-TB3714010454                               Connected       Configured
    TB3714010454/RE0                            Connected
Fabric manager
  FM-0                                          Connected       Configured
Fabric control
  FC-0                                          Connected       Configured
  FC-1                                          Connected       Configured
Diagnostic routing engine
```

 Copyright © 2018, Juniper Networks, Inc.

```
  DRE-0                                          Connected       Configured
Director group
  0281022011000011                               Connected
  0281032012000018                               Connected
```

8. Connect the new Node device to each Interconnect device for data plane interconnection.

9. Verify the data plane interconnection using the *show chassis fabric connectivity* operational mode command from the QFabric default partition CLI. Repeat this command if necessary until the new device is shown in the output.

10. From the QFabric director, enter the following configuration mode CLI commands to remove the previous Node device from the inventory of QFabric system components and associate the serial number of the new device with the alias of the previous device.

    ```
    root@fabric# delete fabric aliases node-device old-serial-numberalias-name
    root@fabric# set fabric aliases node-device new-serial-numberalias-name
    ```

11. Add the interface configuration of the new Node device and ensure the interfaces are grouped into a link aggregation group (LAG) for the rerouting of traffic.

12. Commit the changes using the **commit** command, which sends the configuration of the old device to the new device.

Related Documentation

- *Configuring Aliases for the QFabric System*
- *Converting the Device Mode for a QFabric System Component*
- *show chassis fabric connectivity*

Removing a QFX5100 Device from a Rack or Cabinet

If you need to relocate an installed QFX5100 device, use the procedure described in this topic. (The remainder of this topic uses “rack” to mean “rack or cabinet.”)

NOTE: **When you remove multiple devices from a rack, remove the device in the top of the rack first and proceed to remove the rest of the devices from top to bottom.**

Before removing a QFX5100 device from a rack:

- Ensure that the rack is stable and secured to the building.
- Ensure that there is enough space to place the removed QFX5100 device in its new location and along the path to the new location.
- Read “General Safety Guidelines and Warnings” on page 329.

- Use the appropriate power off sequence for your configuration to safely powered off the device.
  - If the QFX5100 device is being used as a standalone switch, a member in a QFX Virtual Chassis, or either a spine device or a leaf device in a Virtual Chassis Fabric (VCF), see *Powering Off a QFX5100 Device*.
  - If the QFX5100 device is configured as either a Node device or as a Interconnect device in a QFabric system, see "Adding or Replacing a Node Device in a QFabric Node Group" on page 578.
- Disconnect the power cords.
- Ensure that you have disconnected any cables or wires attached to the QFX5100 switch ports.

Ensure that you have the following parts and tools available:

- A Phillips (+) screwdriver, number 2 or number 3, depending on the size of your rack mounting screws, for mounting the QFX5100 device on the rack.

To remove a QFX5100 device from a rack or cabinet:

1. Have one person support the weight of the switch while another person uses the screwdriver to remove the front mounting screws that attach the chassis mounting brackets to the rack or cabinet.
2. Remove the QFX5100 device from the rack or cabinet.
3. Use the screwdriver to remove the mounting screws that attach the mounting blades attached to the rear of the rack or cabinet.
4. Place the removed screws and mounting blades in a labeled bag. You will need them when you reinstall the chassis.
5. Transport the QFX5100 device to your desired new location.

Related Documentation

- Mounting a QFX5100 Device in a Rack or Cabinet on page 435

Removing a QFX3600 or QFX3600-I Device from a Rack or Cabinet

If you need to relocate an installed QFX3600 or QFX3600-I device, use the procedure described in this topic. (The remainder of this topic uses "rack" to mean "rack or cabinet.")

NOTE: **When you remove multiple devices from a rack, remove the device in the top of the rack first and proceed to remove the rest of the devices from top to bottom.**

 Copyright © 2018, Juniper Networks, Inc.

Before removing a QFX3600 or QFX3600-I device from a rack:

- Ensure that the rack is stable and secured to the building.
- Ensure that there is enough space to place the removed QFX3600 or QFX3600-I device in its new location and along the path to the new location.
- Read "General Safety Guidelines and Warnings" on page 329.
- Ensure that the QFX3600 or QFX3600-I device has been safely powered off (see *Powering Off a QFX3600 Device*) and that you have unplugged (disconnected) the power cords.
- Ensure that you have disconnected any cables or wires attached to the QFX3600 or QFX3600-I device ports.

Ensure that you have the following parts and tools available:

- A Phillips (+) screwdriver, number 2 or number 3, depending on the size of your rack mounting screws, for mounting the QFX3600 or QFX3600-I device on the rack.

To remove a QFX3600 or QFX3600-I device from a rack or cabinet:

1. Have one person support the weight of the device while another person uses the screwdriver to remove the mounting screws that attach the chassis front-mounting or mid-mounting brackets to the rack or cabinet.
2. Remove the QFX3600 or QFX3600-I device from the rack or cabinet.
3. If you installed the chassis on a four-post rack using the installation blades, use the screwdriver to remove the mounting screws that attach the installation blades to the rear of the rack.
4. Save the removed screws and installation blades. You will need them when you reinstall the chassis.
5. Transport the QFX3600 or QFX3600-I device to your desired new location.

Related Documentation

- Mounting a QFX3600 or QFX3600-I Device on Two Posts in a Rack or Cabinet on page 455
- Mounting a QFX3600 or QFX3600-I Device on Four Posts in a Rack or Cabinet on page 458

Removing a QFX3500 Device from a Rack or Cabinet

If you need to relocate an installed QFX3500 device, use the procedure described in this topic. (The remainder of this topic uses "rack" to mean "rack or cabinet.")

NOTE: When you remove multiple devices from a rack, remove the device in the top of the rack first and proceed to remove the rest of the devices from top to bottom.

Before removing a QFX3500 device from a rack:

- Ensure that the rack is stable and secured to the building.
- Ensure that there is enough space to place the removed QFX3500 device in its new location and along the path to the new location.
- Read "General Safety Guidelines and Warnings" on page 329.
- Ensure that the QFX3500 device has been safely powered off (see *Powering Off a QFX3500 Device*) and that you have unplugged (disconnected) the power cords.
- Ensure that you have disconnected any cables or wires attached to the QFX3500 device ports.

Ensure that you have the following parts and tools available:

- A Phillips (+) screwdriver, number 2 or number 3, depending on the size of your rack mounting screws, for mounting the QFX3500 device on the rack.

To remove a QFX3500 device from a rack or cabinet:

1. Have one person support the weight of the device while another person uses the screwdriver to remove the mounting screws that attach the chassis front-mounting brackets to the rack or cabinet.
2. Remove the QFX3500 device from the rack or cabinet.
3. Use the screwdriver to remove the mounting screws that attach the mounting blades attached to the rear of the rack or cabinet.
4. Place the removed screws and mounting blades in a labeled bag. You will need them when you reinstall the chassis.
5. Transport the QFX3500 device to your desired new location.

Related Documentation

- Mounting a QFX3500 Device in a Rack or Cabinet on page 475

Copyright © 2018, Juniper Networks, Inc.

CHAPTER 40

Replacing QFX3100 Components

- Installing and Removing QFX3100 Director Device Hardware Components on page 587
- Removing a Power Supply from a QFX3100 Director Device (includes video) on page 588
- Installing a Power Supply in a QFX3100 Director Device (includes video) on page 589
- Removing a Fan Module from a QFX3100 Director Device on page 590
- Installing a Fan Module in a QFX3100 Director Device on page 592
- Removing a Network Module from a QFX3100 Director Device on page 593
- Installing a Network Module in a QFX3100 Director Device on page 596
- Removing an HDD Module from a QFX3100 Director Device on page 599
- Installing an HDD Module in a QFX3100 Director Device on page 601

Installing and Removing QFX3100 Director Device Hardware Components

The field-replaceable units (FRUs) in a QFX3100 Director device are:

- Power supply
- Fan modules
- Hard disk drive (HDD) modules
- Network modules

The AC power supply and fan modules are hot-removable and hot-swappable. You can remove and replace them without powering off the Director device or disrupting device functions.

HDD modules are hot-removable and hot-swappable. You can remove and replace them without powering off the Director device or disrupting device functions. Do not remove both HDD modules at the same time, however.

The network module is not hot-removable or hot-swappable. You should power off the Director device if you need to remove or insert a network module.

See these topics for instructions for installing and removing components:

- Installing a Power Supply in a QFX3100 Director Device (includes video) on page 589
- Removing a Power Supply from a QFX3100 Director Device (includes video) on page 588

- Installing a Fan Module in a QFX3100 Director Device on page 592
- Removing a Fan Module from a QFX3100 Director Device on page 590
- Installing an HDD Module in a QFX3100 Director Device on page 601
- Removing an HDD Module from a QFX3100 Director Device on page 599
- Installing a Network Module in a QFX3100 Director Device on page 596
- Removing a Network Module from a QFX3100 Director Device on page 593

Related Documentation

- Cooling System and Airflow in a QFX3100 Director Device on page 31
- AC Power Supply in a QFX3100 Director Device on page 34
- Network Modules in a QFX3100 Director Device on page 32
- HDD Modules in a QFX3100 Director Device on page 33

Removing a Power Supply from a QFX3100 Director Device (includes video)

The AC power supply in a QFX3100 Director device is a hot-removable and hot-insertable field-replaceable unit (FRU) located on the far right side of the rear panel. Two AC power supplies can be installed in a QFX3100 Director device. You can remove and replace a single AC power supply without powering off the QFX3100 Director device or disrupting QFX3100 Director device functions.

Before you remove an AC power supply from the QFX3100 Director device:

- Ensure that you understand how to prevent electrostatic discharge (ESD) damage. See "Prevention of Electrostatic Discharge Damage" on page 360.

Ensure that you have the following parts and tools available to remove an AC power supply from a QFX3100 Director device:

- ESD grounding strap
- Antistatic bag or antistatic mat
- Replacement power supply for the power supply slot

To remove an AC power supply from a QFX3100 Director device (see Figure 232 on page 589):

1. Attach the ESD grounding strap to your bare wrist, and connect the strap to a site ESD point.
2. Remove the power cord from the AC appliance inlet on the AC power supply faceplate.
3. Push the power supply faceplate ejector lever to the right while pulling the power supply away from the QFX3100 Director device to release the latch. Stop pulling the power supply once the lever is released.

Copyright © 2018, Juniper Networks, Inc.

4. Taking care not to touch power supply components, pins, leads, or solder connections, place one hand under the power supply to support it. Grasp the power supply handle with your other hand and pull the power supply completely out of the chassis.

5. Place the power supply in the antistatic bag or on the antistatic mat.

Figure 232: Removing a Power Supply from a QFX3100 Director Device

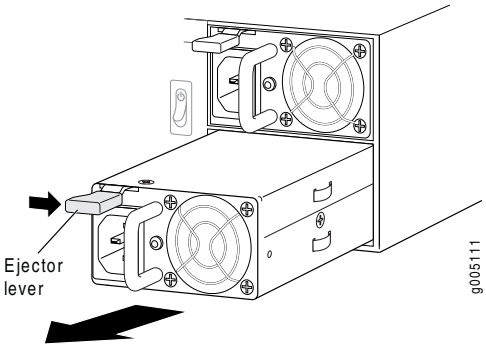

Video: Removing a Power Supply from a QFX3100 Director Device

Related Documentation

- Installing a Power Supply in a QFX3100 Director Device (includes video) on page 589
- AC Power Supply in a QFX3100 Director Device on page 34

Installing a Power Supply in a QFX3100 Director Device (includes video)

The AC power supply in a QFX3100 Director device is a hot-removable and hot-insertable field-replaceable unit (FRU) located on the far right side of the rear panel. Two AC power supplies are installed in a QFX3100 Director device. You can remove and replace a single AC power supply without powering off the QFX3100 Director device or disrupting QFX3100 Director device functions.

Before you install an AC power supply in the QFX3100 Director device:

- Ensure that you understand how to prevent electrostatic discharge (ESD) damage. See "Prevention of Electrostatic Discharge Damage" on page 360.

Ensure that you have the following parts and tools available to install an AC power supply:

- ESD grounding strap

NOTE: **Each AC power supply must be connected to a dedicated AC power source outlet.**

To install an AC power supply in the QFX3100 Director device (see Figure 233 on page 590):

1. Attach the ESD grounding strap to your bare wrist, and connect the strap to a site ESD point.

2. If the power supply slot has a power supply in it that needs to be removed, remove the power supply. See "Removing a Power Supply from a QFX3100 Director Device (includes video)" on page 588.

3. Taking care not to touch power supply components, pins, leads, or solder connections, remove the power supply from its bag.

4. Using one hand on the faceplate handle and the other hand on the bottom of the power supply to support its weight, gently slide the power supply straight into the power supply slot until the power supply reaches a point where backpressure prevents the power supply from pushing forward; do not force the power supply fully into the slot at this point of the procedure.

5. Use your thumb to move the ejector lever at the top of the power supply faceplate to the right, and push the power supply flush into the back of the chassis. Release the latch.

Figure 233: Installing a Power Supply in a QFX3100 Director Device

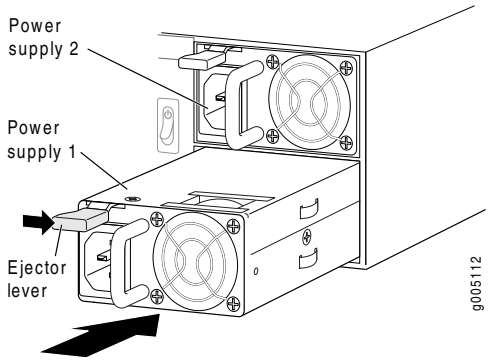

Video: Installing a Power Supply in a QFX3100 Director Device

Related Documentation

- AC Power Supply in a QFX3100 Director Device on page 34
- AC Power Cord Specifications for a QFX3100 Director Device on page 277
- Rear Panel of a QFX3100 Director Device on page 30

Removing a Fan Module from a QFX3100 Director Device

QFX3100 Director devices have three fan modules on the rear panel. The fan modules are hot-removable and hot-insertable field-replaceable units (FRUs). You can remove

Copyright © 2018, Juniper Networks, Inc.

and replace a fan module without powering off the QFX3100 Director device or disrupting QFX3100 Director device functions.

Before you begin removing a fan module from a QFX3100 Director device:

- Ensure that you understand how to prevent electrostatic discharge (ESD) damage. See "Prevention of Electrostatic Discharge Damage" on page 360.

Ensure that you have the following parts and tools available:

- ESD grounding strap
- Antistatic bag or antistatic mat
- A Phillips (+) screwdriver, number 2
- Replacement fan module for the fan module slot

To remove a fan module from a QFX3100 Director device (see Figure 234 on page 592):

1. Attach the ESD grounding strap to your bare wrist, and connect the strap to a site ESD point.

2. Place the antistatic bag or the antistatic mat on a flat, stable surface.

3. Unscrew both captive screws counterclockwise using your fingers. If you are unable to easily unscrew the captive screws with your fingers, use the screwdriver.

   WARNING: **To avoid injury, do not touch the fan with your hands or any tools as you slide the fan module out of the chassis—the fan might still be running.**

4. When the fan stops spinning, grasp the fan module tightly to avoid dropping it and remove the fan module from the fan module slot.

5. Place the fan module in the antistatic bag or on the antistatic mat.

Figure 234: Removing a Fan Module from a QFX3100 Director Device

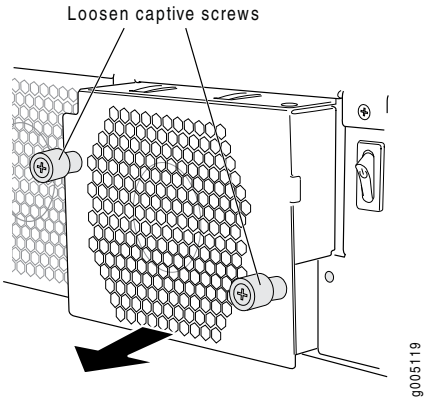

Related Documentation

- Installing a Fan Module in a QFX3100 Director Device on page 592
- Fan Modules in a QFX3100 Director Device on page 33

Installing a Fan Module in a QFX3100 Director Device

QFX3100 Director devices have three field-replaceable unit (FRU) fan modules on the back panel. The fans are hot-removable and hot-insertable FRUs: You can remove and replace them without powering off the QFX3100 Director device or disrupting QFX3100 Director device functions.

Before you begin installing a fan module in a QFX3100 Director device:

- Ensure that you understand how to prevent electrostatic discharge (ESD) damage. See "Prevention of Electrostatic Discharge Damage" on page 360.

Ensure that you have the following parts and tools available:

- ESD grounding strap

To install a fan module in a QFX3100 Director device (see Figure 235 on page 593):

1. Attach the ESD grounding strap to your bare wrist, and connect the strap to a site ESD point.

2. Remove the fan module from its bag.

3. Ensure that the fan module is properly aligned with the fan module slot.

WARNING: To avoid injury, do not touch the fan with your hands or any tools as you slide the fan module into the chassis—the fan may start running.

Copyright © 2018, Juniper Networks, Inc.

4. Insert the fan module into the fan module slot, and gently push the module all the way into the slot until the module is seated flush in the fan module slot.

5. Tighten both screws on the fan module using your fingers.

Figure 235: Installing a Fan Module in a QFX3100 Director Device

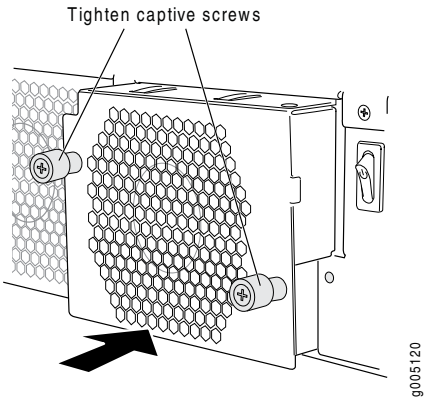

Related Documentation

- Removing a Fan Module from a QFX3100 Director Device on page 590
- Rear Panel of a QFX3100 Director Device on page 30

Removing a Network Module from a QFX3100 Director Device

QFX3100 Director devices support up to two network modules on the front panel. The network modules are field-replaceable units (FRUs) but may not be hot-swapped. You must power off the system and configure the system for the new module before installing a new network module.

- Before you Power Off the Director Device on page 593
- Removing a Network Module from a Director Device on page 595

Before you Power Off the Director Device

If you power off the QFX3100 Director device before configuring the new interfaces, the new interfaces will stay down or be removed from the control plane when the Director device is brought back up. If you are removing network module 1, you need to edit:

- ifcfg-eth2
- ifcfg-eth3
- ifcfg-eth4
- ifcfg-eth5

If you are removing network module 2, you need to edit:

- ifcfg-eth6
- ifcfg-eth7
- ifcfg-eth8
- ifcfg-eth9

Use the following procedure to edit the four ifcfg-eth*n* files.

1. From root, use the vi editor to delete the **HWADDR=** line in each of the four files.

   For example, to configure ifcfg-eth1 for Director device 1:

   ```
   [root@qfabric ~]# ll /etc/sysconfig/network-scripts/ifcfg-eth1
   -rw-r--r-- 1 root root 219 Jun 17 07:14
   /etc/sysconfig/network-scripts/ifcfg-eth0
   -rw-r--r-- 1 root root 153 Jun 17 07:14
   /etc/sysconfig/network-scripts/ifcfg-eth1
   -rw-r--r-- 1 root root 134 Jun 17 07:14
   /etc/sysconfig/network-scripts/ifcfg-eth2
   -rw-r--r-- 1 root root 135 Jun 17 07:15
   /etc/sysconfig/network-scripts/ifcfg-eth3
   -rw-r--r-- 1 root root 135 Jun 17 07:15
   /etc/sysconfig/network-scripts/ifcfg-eth4
   -rw-r--r-- 1 root root 135 Jun 17 07:15
   /etc/sysconfig/network-scripts/ifcfg-eth5
   -rw-r--r-- 1 root root 134 Jun 17 07:14
   /etc/sysconfig/network-scripts/ifcfg-eth6
   -rw-r--r-- 1 root root 121 Jun 17 07:14
   /etc/sysconfig/network-scripts/ifcfg-eth7
   -rw-r--r-- 1 root root 121 Jun 17 07:14
   /etc/sysconfig/network-scripts/ifcfg-eth8
   -rw-r--r-- 1 root root 121 Jun 17 07:14
   /etc/sysconfig/network-scripts/ifcfg-eth9
   [root@dg1 ~]#
   [root@dg1 ~]# cat /etc/sysconfig/network-scripts/ifcfg-eth2
   ```

   HWADDR=00:18:7D:31:19:C2 << **Delete the entire line.**

   ```
   DEVICE=eth2
   USERCTL=no
   SLAVE=yes
   MASTER=bond0
   ONBOOT=yes
   BOOTPROTO=static
   PEERDNS=no
   NOZEROCONF=yes
   MTU=9000
   [root@qfabric ~]#
   ```

2. Save the file and repeat the process with the remaining 3 files for the Director device.

3. Locate and delete the following file:

   [root@qfabric ~]# rm /etc/udev/rules.d/61-persistent-net.rules

4. Power off the QFX3100. See "Powering Off a QFX3100 Director Device" on page 559

Copyright © 2018, Juniper Networks, Inc.

Removing a Network Module from a Director Device

QFX3100 Director devices support up to two network modules on the front panel. The network modules are field-replaceable units (FRUs).

NOTE: **The Director device requires powering off before installation or removal of the network module.**

Before you begin removing a network module from a QFX3100 Director device:

- Ensure that you understand how to prevent electrostatic discharge (ESD) damage. See "Prevention of Electrostatic Discharge Damage" on page 360.

Ensure that you have the following parts and tools available:

- ESD grounding strap
- Phillips (+) screwdriver, number 2
- Antistatic bag or antistatic mat

To remove a network module from a QFX3100 Director device (see Figure 236 on page 596):

1. Attach the ESD grounding strap to your bare wrist, and connect the strap to a site ESD point.
2. Place the antistatic bag or the antistatic mat on a flat, stable surface.
3. Power off the Director device.
4. Unscrew both captive screws counterclockwise using your fingers. If you are unable to easily unscrew the captive screws with your fingers, use the screwdriver.
5. Gently pull the network module toward you and out of the network module slot, being careful to keep one hand underneath the module to support it when it is removed from the chassis.
6. Place the network module in the antistatic bag or on the antistatic mat.

Copyright © 2018, Juniper Networks, Inc.

Figure 236: Removing a Network Module from a QFX3100 Director Device

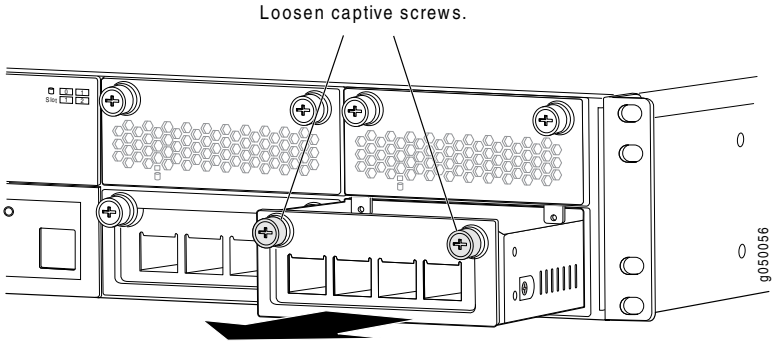

Related Documentation

- Installing a Network Module in a QFX3100 Director Device on page 596
- Network Modules in a QFX3100 Director Device on page 32

Installing a Network Module in a QFX3100 Director Device

QFX3100 Director devices support up to two network modules on the front panel. The network modules are field-replaceable units (FRUs) but may not be hot-swapped. You must power off the system and configure the system for the new module before installing a new network module. If you are replacing an existing network module and have already edited the configuration files, you may proceed to "Installing a Network Module in a Director Device" on page 597.

- Before you Power Off the Director Device on page 596
- Installing a Network Module in a Director Device on page 597

Before you Power Off the Director Device

If you power off the QFX3100 Director device before configuring the new interfaces, the new interfaces will stay down or be removed from the control plane when the Director device is brought back up. If you are removing network module 1, you need to edit:

- ifcfg-eth2
- ifcfg-eth3
- ifcfg-eth4
- ifcfg-eth5

If you are removing network module 2, you need to edit:

- ifcfg-eth6
- ifcfg-eth7
- ifcfg-eth8
- ifcfg-eth9

Copyright © 2018, Juniper Networks, Inc.

Use the following procedure to edit the four ifcfg-eth*n* files.

1. From root, use the vi editor to delete the **HWADDR=** line in each of the four files.

   For example, to configure ifcfg-eth1 for Director device 1:

   ```
   [root@qfabric ~]# ll /etc/sysconfig/network-scripts/ifcfg-eth1
   -rw-r--r-- 1 root root 219 Jun 17 07:14
   /etc/sysconfig/network-scripts/ifcfg-eth0
   -rw-r--r-- 1 root root 153 Jun 17 07:14
   /etc/sysconfig/network-scripts/ifcfg-eth1
   -rw-r--r-- 1 root root 134 Jun 17 07:14
   /etc/sysconfig/network-scripts/ifcfg-eth2
   -rw-r--r-- 1 root root 135 Jun 17 07:15
   /etc/sysconfig/network-scripts/ifcfg-eth3
   -rw-r--r-- 1 root root 135 Jun 17 07:15
   /etc/sysconfig/network-scripts/ifcfg-eth4
   -rw-r--r-- 1 root root 135 Jun 17 07:15
   /etc/sysconfig/network-scripts/ifcfg-eth5
   -rw-r--r-- 1 root root 134 Jun 17 07:14
   /etc/sysconfig/network-scripts/ifcfg-eth6
   -rw-r--r-- 1 root root 121 Jun 17 07:14
   /etc/sysconfig/network-scripts/ifcfg-eth7
   -rw-r--r-- 1 root root 121 Jun 17 07:14
   /etc/sysconfig/network-scripts/ifcfg-eth8
   -rw-r--r-- 1 root root 121 Jun 17 07:14
   /etc/sysconfig/network-scripts/ifcfg-eth9
   [root@dg1 ~]#
   [root@dg1 ~]# cat /etc/sysconfig/network-scripts/ifcfg-eth2
   ```

   HWADDR=00:18:7D:31:19:C2 << **Delete the entire line.**

   ```
   DEVICE=eth2
   USERCTL=no
   SLAVE=yes
   MASTER=bond0
   ONBOOT=yes
   BOOTPROTO=static
   PEERDNS=no
   NOZEROCONF=yes
   MTU=9000
   [root@qfabric ~]#
   ```

2. Save the file and repeat the process with the remaining 3 files for the Director device.

3. Locate and delete the following file:

   [root@qfabric ~]# rm /etc/udev/rules.d/61-persistent-net.rules

4. Power off the QFX3100. See "Powering Off a QFX3100 Director Device" on page 559

Installing a Network Module in a Director Device

Before you begin installing a network module in a QFX3100 Director device:

- Ensure that you understand how to prevent electrostatic discharge (ESD) damage. See "Prevention of Electrostatic Discharge Damage" on page 360.

- Ensure the Director device is configured for the new network module and powered down. See "Removing a Power Supply from a QFX3100 Director Device (includes video)" on page 588.

Ensure that you have the following parts and tools available:

- ESD grounding strap

To install a network module in a QFX3100 Director device (see Figure 237 on page 599):

1. Attach the ESD grounding strap to your bare wrist, and connect the strap to a site ESD point.

2. Taking care not to touch network module components, pins, leads, or solder connections, remove the network module from its bag.

3. Ensure that the network module is properly aligned with the network module slot. The network module faceplate should be aligned so the ports are numbered 0 through 3 from left to right.

4. Insert the network module into the network module slot, and gently push the module all the way into the slot until the module is seated flush in the network module slot.

   CAUTION: **Do not use too much force to seat the network module flush into the network module slot. If backpressure is preventing the network module from seating flush in the network module slot, remove the network module from the slot and retry the procedure, taking care to ensure that the network module is properly aligned with the network module slot.**

5. Tighten both screws on the network module, using your fingers.

6. Power on the QFX3100 Director device. See "Powering On a QFX3100 Director Device" on page 385.

After system bootup, CentOS rescans the network module for MAC addresses and includes the new interfaces in the aggregated Ethernet (AE) bundle.

Copyright © 2018, Juniper Networks, Inc.

Figure 237: Installing an HDD Module in a QFX3100 Director Device

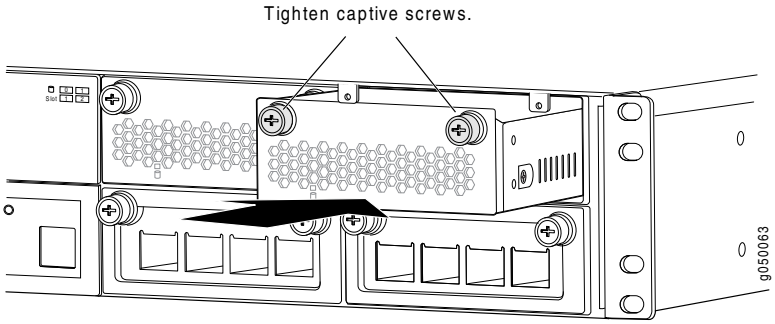

Related Documentation

- Network Modules in a QFX3100 Director Device on page 32
- Rear Panel of a QFX3100 Director Device on page 30

Removing an HDD Module from a QFX3100 Director Device

QFX3100 Director devices have two 2-terabyte (TB) hard disk drive (HDD) module slots on the front panel. HDD modules are field-replaceable units (FRUs) and hot-swappable. At least one HDD module should always be installed in a QFX3100 Director device and the array volume should have the status of *Optimal*.

BEST PRACTICE: **Athough the HDD is hot-swappable, isolate the QFX3100 Director device from the network before replacing the HDD to ensure the integrity of the remaining Director device.**

Before you begin removing an HDD module from a QFX3100 Director device:

- Ensure that you understand how to prevent electrostatic discharge (ESD) damage. See "Prevention of Electrostatic Discharge Damage" on page 360.

Ensure that you have the following parts and tools available:

- ESD grounding strap
- Phillips (+) screwdriver, number 2
- Antistatic bag or antistatic mat
- Replacement HDD module for the HDD module slot

To remove an HDD module from a QFX3100 Director device (see Figure 238 on page 600):

BEST PRACTICE: **Although HDD modules are hot-swappable, to ensure the maximum system integrity, the remaining module must be operational and the array volume optimal. After replacing a module, do not remove either HDD module until both array volumes are full-synchronized and optimal. Otherwise, data corruption could occur causing the drive not be recognized as part of the RAID.**

1. Attach the ESD grounding strap to your bare wrist, and connect the strap to a site ESD point.
2. Place the antistatic bag or the antistatic mat on a flat, stable surface.
3. Unscrew both captive screws counterclockwise using your fingers. If you are unable to unscrew the captive screws using your fingers, use the screwdriver.
4. Gently pull the HDD module toward you and out of the HDD module slot, being careful to keep one hand underneath the module to support it when it is removed from the chassis.

   NOTE: **If the Director device is powered on, at least one HDD module must be installed at all times. This step should only be performed when an HDD module in the other HDD slot is installed and optimal.**

5. Place the HDD module in the antistatic bag or on the antistatic mat.

Figure 238: Removing an HDD Module from a QFX3100 Director Device

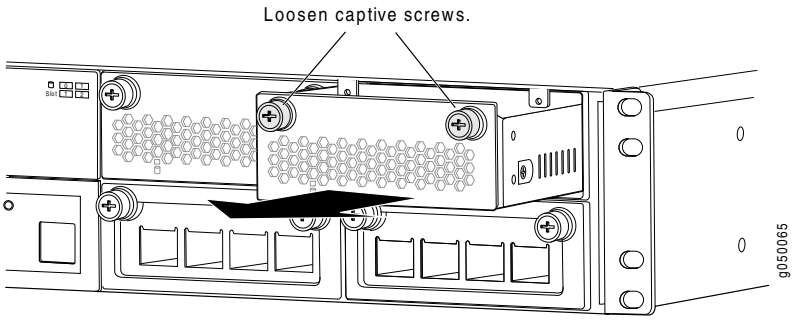

Related Documentation

- Installing an HDD Module in a QFX3100 Director Device on page 601
- HDD Modules in a QFX3100 Director Device on page 33

Copyright © 2018, Juniper Networks, Inc.

- Troubleshooting HDD Module Failures in a RAID Volume on page 849

Installing an HDD Module in a QFX3100 Director Device

QFX3100 Director devices have two 2-terabyte (TB) hard disk drive (HDD) module slots on the front panel. HDD modules are field-replaceable units (FRUs) and hot-swappable. At least one HDD module should always be installed in a QFX3100 Director device and the array volume should have the status of *Optimal*.

BEST PRACTICE: **Athough the HDD is hot-swappable, to ensure memory is not corrupted, isolate the QFX3100 Director device from the network before replacing the HDD.**

NOTE: **When you install an HDD module in a QFX3100 Director device that is powered on, the HDD module partitions are created and the file system is automatically synchronized with the second HDD module in the QFX3100 Director device, and the other QFX3100 Director device in the QFX3100 Director group.**

Before you begin installing an HDD module in a QFX3100 Director device:

- Ensure that you understand how to prevent electrostatic discharge (ESD) damage. See "Prevention of Electrostatic Discharge Damage" on page 360.

Ensure that you have the following parts and tools available:

- ESD grounding strap

To install an HDD module in a QFX3100 Director device (see Figure 239 on page 602):

1. Attach the ESD grounding strap to your bare wrist, and connect the strap to a site ESD point.

2. Taking care not to touch HDD module components, pins, leads, or solder connections, remove the HDD module from its bag.

3. If the Director device is powered on, at least one HDD module must be installed at all times. You should only perform this step when an HDD module in the other HDD slot is installed and operational.

   If an HDD module in the HDD module slot needs to be removed, remove the HDD module. See "Removing an HDD Module from a QFX3100 Director Device" on page 599

4. Ensure that the HDD module is properly aligned with the HDD module slot. The HDD module faceplate should be aligned so the screws are aligned with the top of the HDD module slot.

5. Insert the HDD module into the HDD module slot, and gently push the module all the way into the slot until the module is seated flush in the HDD module slot.

   CAUTION: **If backpressure prevents the HDD module from seating flush in the HDD module slot, remove the HDD module from the slot and retry the procedure, taking care to ensure that the HDD module is properly aligned with the HDD module slot.**

6. Tighten both screws on the HDD module, using your fingers.

Figure 239: Installing an HDD Module in a QFX3100 Director Device

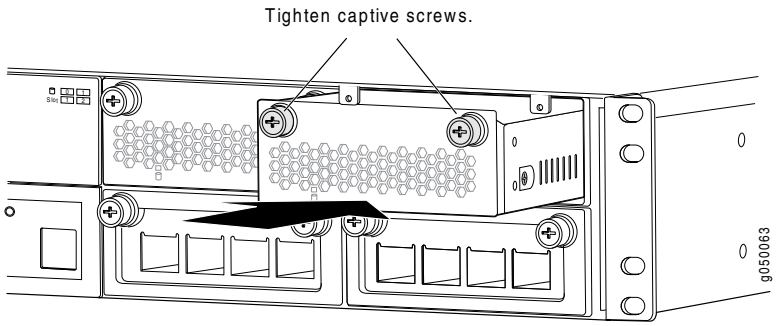

Related Documentation

- HDD Modules in a QFX3100 Director Device on page 33
- Rear Panel of a QFX3100 Director Device on page 30
- Troubleshooting HDD Module Failures in a RAID Volume on page 849

Copyright © 2018, Juniper Networks, Inc.

CHAPTER 41

Replacing QFX3008-I Components

- Installing and Removing QFX3008-I Interconnect Device Hardware Components on page 604
- Removing an AC Power Supply from a QFX3008-I Interconnect Device on page 605
- Installing an AC Power Supply in a QFX3008-I Interconnect Device on page 607
- Removing a Wiring Tray from a QFX3008-I Interconnect Device on page 608
- Installing a Wiring Tray in a QFX3008-I Interconnect Device on page 610
- Removing a Bottom Fan Tray and Front Panel Display from a QFX3008-I Interconnect Device on page 611
- Installing a Bottom Fan Tray and Front Panel Display in a QFX3008-I Interconnect Device on page 613
- Removing a Side Fan Tray from a QFX3008-I Interconnect Device on page 614
- Installing a Side Fan Tray in a QFX3008-I Interconnect Device on page 616
- Removing a Top Fan Tray from a QFX3008-I Interconnect Device on page 618
- Installing a Top Fan Tray in a QFX3008-I Interconnect Device on page 619
- Removing a Bottom Air Filter from a QFX3008-I Interconnect Device on page 620
- Installing a Bottom Air Filter in a QFX3008-I Interconnect Device on page 622
- Removing a Side Air Filter from a QFX3008-I Interconnect Device on page 623
- Installing a Side Air Filter in a QFX3008-I Interconnect Device on page 625
- Taking a Control Board Offline in a QFX3008-I Interconnect Device on page 627
- Removing a Control Board from a QFX3008-I Interconnect Device on page 629
- Installing a Control Board in a QFX3008-I Interconnect Device on page 631
- Taking a 16-Port QSFP+ Front Card Offline in a QFX3008-I Interconnect Device on page 633
- Removing a 16-Port QSFP+ Front Card from a QFX3008-I Interconnect Device on page 634
- Installing a 16-Port QSFP+ Front Card in a QFX3008-I Interconnect Device on page 636
- Taking the Rear Card Offline in a QFX3008-I Interconnect Device on page 638
- Removing a Rear Card from a QFX3008-I Interconnect Device on page 640
- Installing a Rear Card in a QFX3008-I Interconnect Device on page 641

Copyright © 2018, Juniper Networks, Inc.

Installing and Removing QFX3008-I Interconnect Device Hardware Components

The field-replaceable units (FRUs) in a QFX3008-I Interconnect device are:

- Control Boards
- Fan trays
- Air filters
- 16-port QSFP+ front cards
- Rear cards
- QSFP+ and SFP+ transceivers
- Power supplies
- Wiring trays

The FRUs in a QFX3008-I Interconnect device are hot-insertable and hot-removable: you can remove and replace these components while the device is functioning without turning off power to the device or disrupting the device function. However, we recommend that you take the 16-port QSFP+ front cards and the rear cards offline and power them off before you remove them. You must take Control Boards offline before you remove them. See "Field-Replaceable Units in a QFX3008-I Interconnect Device" on page 42 for details.

To install a Control Board in a QFX3008-I Interconnect device, follow the instructions in "Installing a Control Board in a QFX3008-I Interconnect Device" on page 631. To remove a Control Board from a QFX3008-I Interconnect device, follow the instructions in "Removing a Control Board from a QFX3008-I Interconnect Device" on page 629.

To install a fan tray in a QFX3008-I Interconnect device, follow the instructions in "Installing a Bottom Fan Tray and Front Panel Display in a QFX3008-I Interconnect Device" on page 613, "Installing a Side Fan Tray in a QFX3008-I Interconnect Device" on page 616, and "Installing a Top Fan Tray in a QFX3008-I Interconnect Device" on page 619. To remove a fan tray from a QFX3008-I Interconnect device, follow the instructions in "Removing a Bottom Fan Tray and Front Panel Display from a QFX3008-I Interconnect Device" on page 611, "Removing a Side Fan Tray from a QFX3008-I Interconnect Device" on page 614, and "Removing a Top Fan Tray from a QFX3008-I Interconnect Device" on page 618.

To install an air filter in a QFX3008-I Interconnect device, follow the instructions in "Installing a Bottom Air Filter in a QFX3008-I Interconnect Device" on page 622 and "Installing a Side Air Filter in a QFX3008-I Interconnect Device" on page 625. To remove an air filter from a QFX3008-I Interconnect device, follow the instructions in "Removing a Bottom Air Filter from a QFX3008-I Interconnect Device" on page 620 and "Removing a Side Air Filter from a QFX3008-I Interconnect Device" on page 623.

To install a 16-port QSFP+ front card in a QFX3008-I Interconnect device, follow the instructions in "Installing a 16-Port QSFP+ Front Card in a QFX3008-I Interconnect Device" on page 636. To remove a 16-port QSFP+ front card from a QFX3008-I Interconnect device,

 Copyright © 2018, Juniper Networks, Inc.

follow the instructions in "Removing a 16-Port QSFP+ Front Card from a QFX3008-I Interconnect Device" on page 634.

To install a rear card in a QFX3008-I Interconnect device, follow the instructions in "Installing a Rear Card in a QFX3008-I Interconnect Device" on page 641. To remove a rear card from a QFX3008-I Interconnect device, follow the instructions in "Removing a Rear Card from a QFX3008-I Interconnect Device" on page 640.

To install a transceiver in a QFX3008-I Interconnect device, follow the instructions in "Installing a Transceiver in a QFX Series Device" on page 709. To remove a transceiver from a QFX3008-I Interconnect device, follow the instructions in "Removing a Transceiver from a QFX Series Device" on page 707.

To install a power supply in a QFX3008-I Interconnect device, follow the instructions in "Installing an AC Power Supply in a QFX3008-I Interconnect Device" on page 607. To remove a power supply from a QFX3008-I Interconnect device, follow the instructions in "Removing an AC Power Supply from a QFX3008-I Interconnect Device" on page 605.

To install a wiring tray in a QFX3008-I Interconnect device, follow the instructions in "Installing a Wiring Tray in a QFX3008-I Interconnect Device" on page 610. To remove a wiring tray from a QFX3008-I Interconnect device, follow the instructions in "Removing a Wiring Tray from a QFX3008-I Interconnect Device" on page 608.

Related Documentation

- QFX3008-I Interconnect Device Overview on page 37

Removing an AC Power Supply from a QFX3008-I Interconnect Device

The AC power supply in a QFX3008-I Interconnect device is a hot-insertable and hot-removable field-replaceable unit (FRU). Six AC power supplies are installed in the chassis. All power supplies install in the rear of the chassis in the slots provided at the bottom. See "Slot Numbering for a QFX3008-I Interconnect Device" on page 44.

Before you remove an AC power supply from the device, ensure that you understand how to prevent ESD damage. See "Prevention of Electrostatic Discharge Damage" on page 360.

Ensure that you have the following parts and tools available to remove an AC power supply from a QFX3008-I Interconnect device:

- Electrostatic discharge (ESD) grounding strap
- Phillips (+) screwdriver, number 1
- Replacement power supply

CAUTION: **Do not leave the power supply slot empty while the device is operational. Replace the power supply promptly.**

To remove an AC power supply from a QFX3008-I Interconnect device (see Figure 240 on page 606):

1. Attach the ESD grounding strap to your bare wrist, and connect the strap to the ESD point on the chassis.

2. Unscrew the captive screw, located at the top of each power supply, counter-clockwise using your fingers. If you cannot easily unscrew the captive screw with your fingers, use the screwdriver.

3. Pull the captive screw away from the faceplate of the power supply to release the latch.

4. Pull the handle away from the faceplate of the power supply until it is perpendicular to the faceplate.

5. Taking care not to touch power supply components, pins, leads, or solder connections, place one hand under the power supply to support it. Grasp the power supply handle with your other hand and pull the power supply completely out of the chassis.

Figure 240: Removing an AC Power Supply from a QFX3008-I Interconnect Device

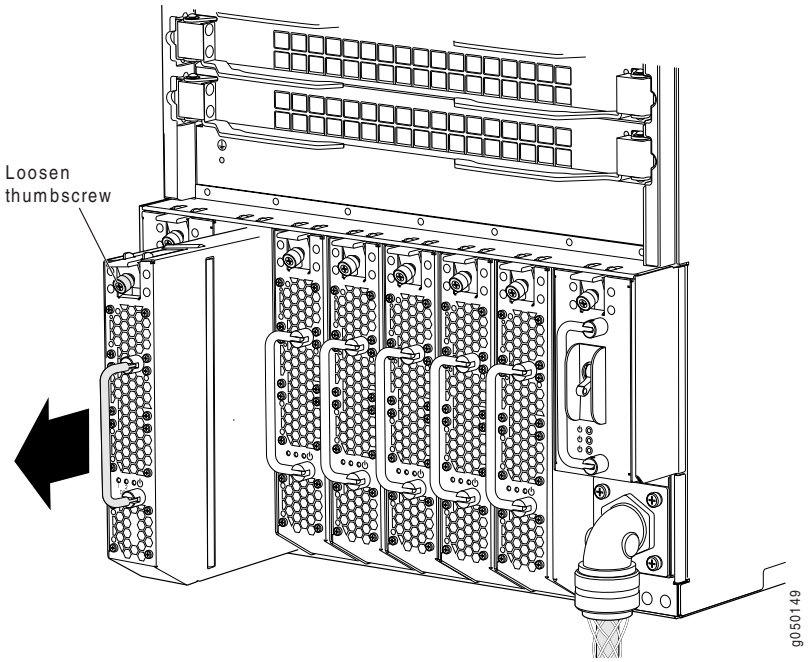

Related Documentation

- AC Power Supply in a QFX3008-I Interconnect Device on page 56
- Installing an AC Power Supply in a QFX3008-I Interconnect Device on page 607

Copyright © 2018, Juniper Networks, Inc.

Installing an AC Power Supply in a QFX3008-I Interconnect Device

The AC power supply in a QFX3008-I Interconnect device is a hot-insertable and hot-removable field-replaceable unit (FRU). Six AC power supplies are installed in the chassis. All power supplies install in the rear of the chassis in the slots provided at the bottom. See "Slot Numbering for a QFX3008-I Interconnect Device" on page 44.

Before you install an AC power supply in the device, ensure that you understand how to prevent ESD damage. See "Prevention of Electrostatic Discharge Damage" on page 360.

Ensure that you have the following parts and tools available to install an AC power supply in a QFX3008-I Interconnect device:

- Electrostatic discharge (ESD) grounding strap
- Phillips (+) screwdriver, number 1

To install an AC power supply in a QFX3008-I Interconnect device (see Figure 241 on page 608):

1. Attach the ESD grounding strap to your bare wrist, and connect the strap to the ESD point on the chassis.
2. Taking care not to touch power supply components, pins, leads, or solder connections, remove the power supply from its bag.
3. Unscrew the captive screw, located at the top of each power supply, counterclockwise using your fingers. If you cannot easily unscrew the captive screw with your fingers, use the screwdriver.
4. Pull the handle away from the faceplate of the power supply until it is perpendicular to the faceplate.
5. Using both hands, place the power supply in the power supply slot on the rear of the device. Slide the power supply straight into the chassis until the power supply is fully seated in the slot. Ensure that the power supply faceplate is flush with any adjacent power supply faceplates.
6. Push the captive screw into the power supply faceplate. Ensure that the screw is seated inside the corresponding hole on the faceplate.
7. Tighten the captive screw using your fingers. When the screw is completely tight, the latch locks into the device chassis.

Copyright © 2018, Juniper Networks, Inc.

Figure 241: Installing an AC Power Supply in a QFX3008-I Interconnect Device

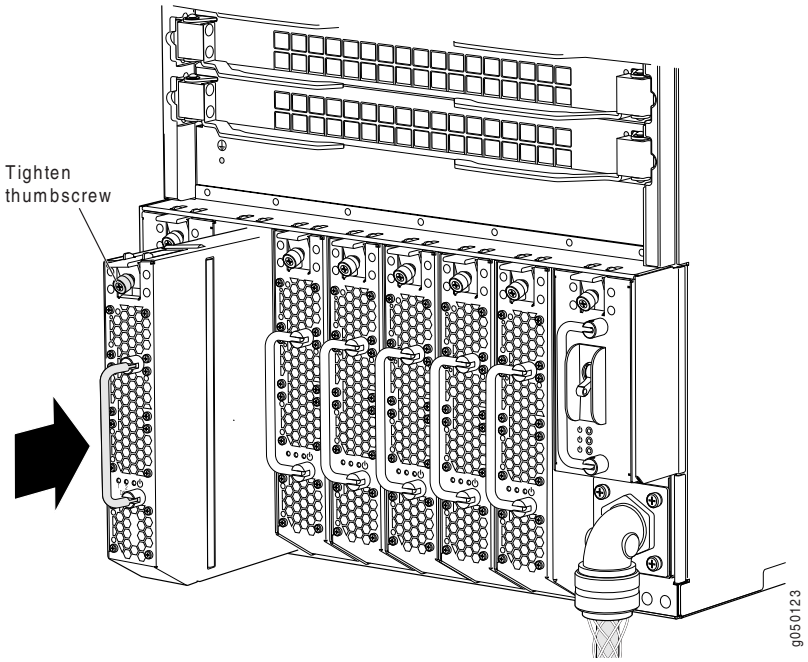

Related Documentation

- AC Power Supply in a QFX3008-I Interconnect Device on page 56
- Removing an AC Power Supply from a QFX3008-I Interconnect Device on page 605

Removing a Wiring Tray from a QFX3008-I Interconnect Device

The wiring tray in a QFX3008-I Interconnect device is a hot-insertable and hot-removable field-replaceable unit (FRU). Two wiring trays are installed in the rear of the chassis.

Before you remove a wiring tray from the device, ensure that you understand how to prevent ESD damage. See "Prevention of Electrostatic Discharge Damage" on page 360.

Ensure that you have the following parts and tools available to remove a wiring tray from a QFX3008-I Interconnect device:

- Electrostatic discharge (ESD) grounding strap
- Phillips (+) screwdriver, number 1
- Replacement wiring tray

CAUTION: **Do not leave the wiring tray slot empty while the device is operational. Replace the wiring tray promptly.**

Copyright © 2018, Juniper Networks, Inc.

To remove a wiring tray from a QFX3008-I Interconnect device (see Figure 242 on page 609):

1. Set the wiring tray power switch to the OFF (O) position.

2. If the AC power source has a power switch, set it to the OFF (O) position, and unplug the power cord or cords from the AC power source.

3. Attach the ESD grounding strap to your bare wrist, and connect the strap to the ESD point on the chassis.

4. Unscrew the captive screw, located at the top of each wiring tray, counterclockwise using your fingers. If you cannot easily unscrew the captive screw with your fingers, use the screwdriver.

5. Taking care not to touch wiring tray components, pins, leads, or solder connections, place one hand under the wiring tray to support it. Grasp the wiring tray handle with your other hand, depress the tab at the top of the wiring tray, and pull the wiring tray completely out of the chassis.

Figure 242: Removing a Wiring Tray from a QFX3008-I Interconnect Device

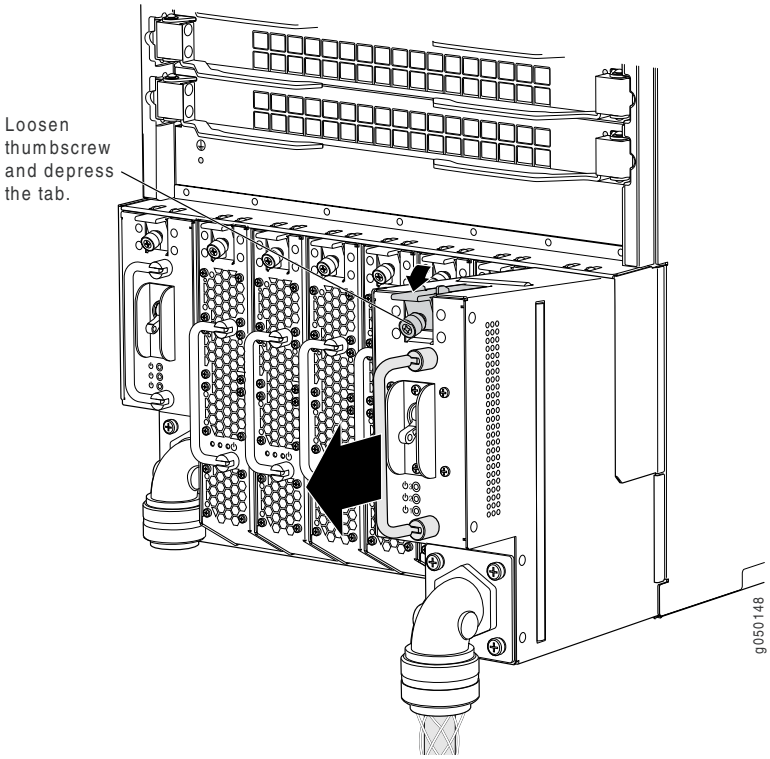

Related Documentation

- Wiring Tray in a QFX3008-I Interconnect Device on page 58
- Installing a Wiring Tray in a QFX3008-I Interconnect Device on page 610

Installing a Wiring Tray in a QFX3008-I Interconnect Device

The wiring tray in a QFX3008-I Interconnect device is a hot-insertable and hot-removable field-replaceable unit (FRU). Two wiring trays are installed in the rear of the chassis.

Before you install a wiring tray in the device, ensure that you understand how to prevent ESD damage. See "Prevention of Electrostatic Discharge Damage" on page 360.

NOTE: **AC power cords must be connected to three-phase delta and wye wiring trays before they are installed in the chassis. See** "Connecting AC Power to a QFX3008-I Interconnect Device with Three-Phase Delta Wiring Trays" on page 418 **and** "Connecting AC Power to a QFX3008-I Interconnect Device with Three-Phase Wye Wiring Trays" on page 422.

Ensure that you have the following parts and tools available to install a wiring tray in a QFX3008-I Interconnect device:

- Electrostatic discharge (ESD) grounding strap
- Phillips (+) screwdriver, number 1

To install a wiring tray in a QFX3008-I Interconnect device (see Figure 243 on page 611):

1. Attach the ESD grounding strap to your bare wrist, and connect the strap to the ESD point on the chassis.
2. Set the wiring tray power switch to the OFF (O) position.
3. Unscrew the captive screw, located at the top of each wiring tray, counterclockwise using your fingers. If you cannot easily unscrew the captive screw with your fingers, use the screwdriver.
4. Using both hands, place the wiring tray in the wiring tray slot on the rear of the device. Slide the wiring tray straight into the chassis until the wiring tray is fully seated in the slot.
5. Push the captive screw into the wiring tray faceplate. Ensure that the screw is seated inside the corresponding hole on the faceplate.
6. Tighten the captive screw using your fingers. When the screw is completely tight, the latch locks into the device chassis.

Copyright © 2018, Juniper Networks, Inc.

Figure 243: Installing a Wiring Tray in a QFX3008-I Interconnect Device

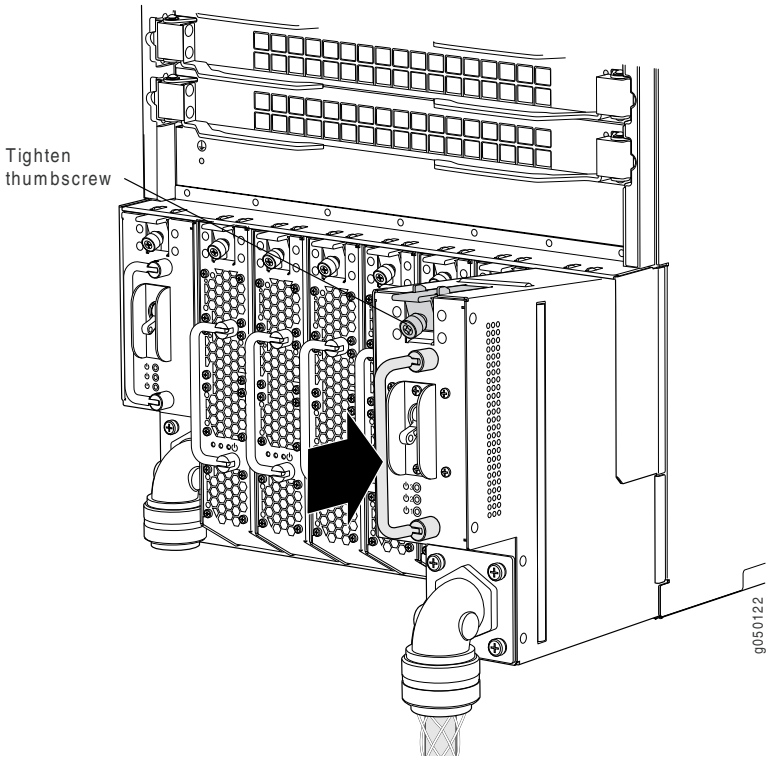

Related Documentation

- Wiring Tray in a QFX3008-I Interconnect Device on page 58
- Removing a Wiring Tray from a QFX3008-I Interconnect Device on page 608

Removing a Bottom Fan Tray and Front Panel Display from a QFX3008-I Interconnect Device

A QFX3008-I Interconnect device bottom fan tray and front panel display is field-replaceable and is hot-removable and hot-insertable; you can remove and replace the fan tray while the device is running without turning off power to the device or disrupting device functions. The rest of this topic uses bottom fan tray to mean bottom fan tray and front panel display.

CAUTION: Do not remove a fan tray unless you have a replacement fan tray available.

The bottom fan tray installs horizontally as part of the panel display located directly below the front card cage. A handle on the panel display faceplate facilitates handling of the fan tray. There is a captive screw at the top of the panel display to secure the fan tray in the chassis.

Before you remove a bottom fan tray, ensure that you understand how to prevent ESD damage. See "Prevention of Electrostatic Discharge Damage" on page 360.

Ensure that you have the following parts and tools available to remove a fan tray from a QFX3008-I Interconnect device:

- Electrostatic discharge (ESD) grounding strap
- Replacement fan tray
- Phillips (+) screwdriver, number 2

CAUTION: **The fan trays can be removed and replaced while the QFX3008-I Interconnect device is operating. However, you must replace the fan tray within 2 minutes of removing the fan tray to prevent overheating of the chassis.**

To remove a bottom fan tray from a QFX3008-I Interconnect device (see Figure 244 on page 613):

1. Attach the ESD grounding strap to your bare wrist, and connect the strap to the ESD point on the chassis.
2. Unscrew the captive screw counterclockwise using your fingers. If you cannot easily unscrew the captive screw with your fingers, use the screwdriver.
3. Grasp the handle on the right side of the panel display and gently pull the fan tray toward you about 5 in. (13 cm) out of the chassis.

   WARNING: **There is no fan guard on the fans. Be careful to keep your fingers clear of the moving fan blades when you are removing the fan tray. To avoid injury, do not touch the fans with your hands or any tools as you slide the fan tray out of the chassis—the fans might still be spinning.**

4. Wait for approximately 15 seconds to allow all the fans to stop spinning.
5. Slide the fan tray completely out of the chassis.

Copyright © 2018, Juniper Networks, Inc.

Figure 244: Removing a Bottom Front Fan Tray from a QFX3008-I Interconnect Device

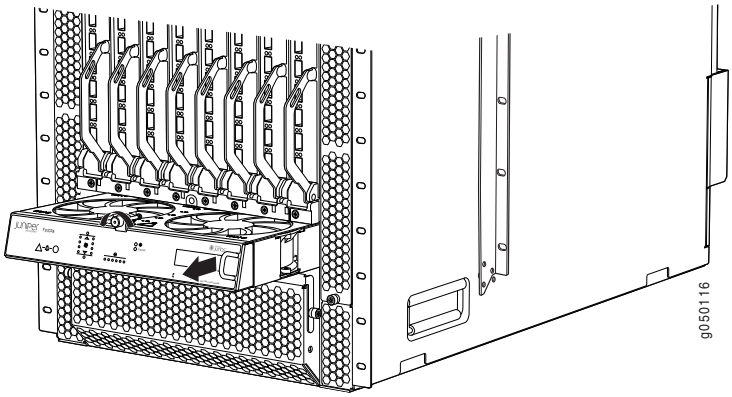

Related Documentation

- Installing a Bottom Fan Tray and Front Panel Display in a QFX3008-I Interconnect Device on page 613
- Cooling System and Airflow in a QFX3008-I Interconnect Device on page 48
- Field-Replaceable Units in a QFX3008-I Interconnect Device on page 42

Installing a Bottom Fan Tray and Front Panel Display in a QFX3008-I Interconnect Device

A QFX3008-I Interconnect device bottom fan tray and front panel display is field-replaceable and is hot-removable and hot-insertable; you can remove and replace the fan tray while the device is running without turning off power to the device or disrupting device functions. The rest of this topic uses bottom fan tray to mean bottom fan tray and front panel display.

The bottom fan tray installs horizontally as part of the front panel display located directly below the front card cage. A handle on the bottom fan tray faceplate facilitates handling of the fan tray. There is a captive screw at the top of the bottom fan tray to secure the fan tray in the chassis.

Before you install a bottom fan tray, ensure that you understand how to prevent ESD damage. See "Prevention of Electrostatic Discharge Damage" on page 360.

Ensure that you have the following parts and tools available to install a bottom fan tray in a QFX3008-I Interconnect device:

- Electrostatic discharge (ESD) grounding strap

CAUTION: **The fan trays can be removed and replaced while the QFX3008-I Interconnect device is operating. However, you must replace the fan tray**

within 2 minutes of removing the fan tray to prevent overheating of the chassis.

To install a fan tray in a QFX3008-I Interconnect device (see Figure 245 on page 614):

1. Attach the ESD grounding strap to your bare wrist, and connect the strap to the ESD point on the chassis.
2. Hold the handle of the fan tray with one hand and support the weight of the tray with the other hand. Align the tray with the fan tray guides on the fan tray slot. Slide in the fan tray until it is fully seated in the chassis.
3. Tighten the captive screw on the panel display using your fingers.

Figure 245: Installing a Bottom Fan Tray in a QFX3008-I Interconnect Device

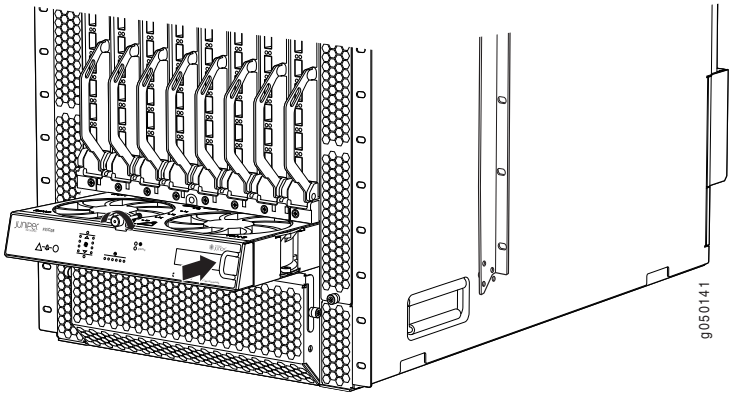

Related Documentation

- Removing a Bottom Fan Tray and Front Panel Display from a QFX3008-I Interconnect Device on page 611
- Cooling System and Airflow in a QFX3008-I Interconnect Device on page 48

Removing a Side Fan Tray from a QFX3008-I Interconnect Device

A QFX3008-I Interconnect device has eight field-replaceable side fan trays. All eight side fan trays are hot-removable and hot-insertable field-replaceable units (FRUs); you can remove and replace the fan tray while the device is running without turning off power to the device or disrupting device functions.

CAUTION: Do not remove a fan tray unless you have a replacement fan tray available.

 Copyright © 2018, Juniper Networks, Inc.

Four fan trays install vertically on the left front of the chassis and four on the right front of the chassis. Handles and captive screws on the two cover panels on each side of the chassis facilitate handling and securing of the fan trays in the chassis.

Before you remove a fan tray, ensure that you understand how to prevent ESD damage. See "Prevention of Electrostatic Discharge Damage" on page 360.

Ensure that you have the following parts and tools available to remove a fan tray from a QFX3008-I Interconnect device:

- Electrostatic discharge (ESD) grounding strap
- Replacement fan tray
- Phillips (+) screwdriver, number 2

CAUTION: **The fan trays can be removed and replaced while the QFX3008-I Interconnect device is operating. However, you must replace the fan tray within 2 minutes of removing the fan tray to prevent overheating of the chassis.**

To remove a fan tray from a QFX3008-I Interconnect device (see Figure 246 on page 616):

1. Attach the ESD grounding strap to your bare wrist, and connect the strap to the ESD point on the chassis.
2. Unscrew the captive screw, located at the top of each cover panel, counterclockwise using your fingers. If you cannot easily unscrew the captive screw with your fingers, use the screwdriver.
3. Hold the screw on the cover panel with one hand while holding the handle with the other. Pull firmly on the screw to detach the cover panel.
4. Pull on the small handle to slide the fan tray out about 5 in. (13 cm) out of the chassis.

   WARNING: **There is no fan guard on the fans. Be careful to keep your fingers clear of the moving fan blades when you are removing the fan tray. To avoid injury, do not touch the fans with your hands or any tools as you slide the fan tray out of the chassis—the fans might still be spinning.**

   CAUTION: **Do not attempt to pull the fan tray out by the air filter tab, located in the center of the module. You can damage the air filter.**

5. Wait for approximately 15 seconds to allow all the fans to stop spinning.
6. Slide the fan tray completely out of the chassis, being careful to use your other hand to support the weight.

Copyright © 2018, Juniper Networks, Inc.

Figure 246: Removing a Side Fan Tray from a QFX3008-I Interconnect Device

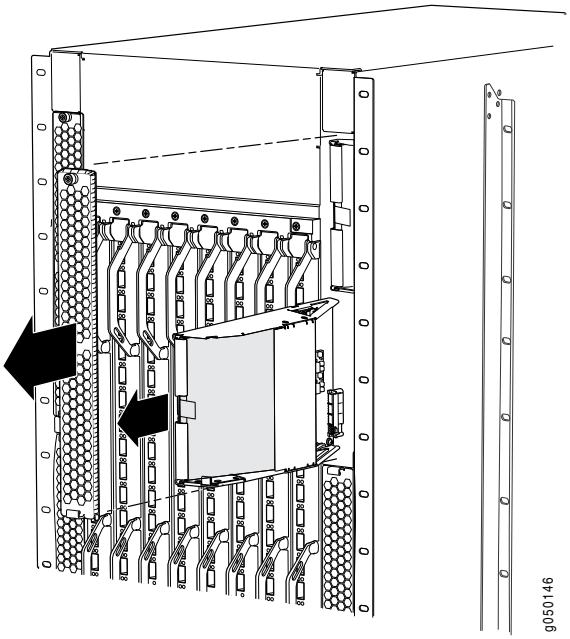

Related Documentation

- Installing a Side Fan Tray in a QFX3008-I Interconnect Device on page 616
- Cooling System and Airflow in a QFX3008-I Interconnect Device on page 48
- Field-Replaceable Units in a QFX3008-I Interconnect Device on page 42

Installing a Side Fan Tray in a QFX3008-I Interconnect Device

A QFX3008-I Interconnect device has eight field-replaceable side fan trays. All eight side fan trays are hot-removable and hot-insertable field-replaceable units (FRUs); you can remove and replace the fan tray while the device is running without turning off power to the device or disrupting device functions.

Four fan trays install vertically on the left front of the chassis and four on the right front of the chassis. Handles and captive screws on the two cover panels on each side of the chassis facilitate handling and securing of the fan trays in the chassis.

Before you begin to install a fan tray, ensure that you understand how to prevent ESD damage. See "Prevention of Electrostatic Discharge Damage" on page 360.

Ensure that you have the following parts and tools available to install a fan tray in a QFX3008-I Interconnect device:

- Electrostatic discharge (ESD) grounding strap
- Replacement fan tray

 Copyright © 2018, Juniper Networks, Inc.

CAUTION: The fan trays can be removed and replaced while the QFX3008-I Interconnect device is operating. However, you must replace the fan tray within 2 minutes of removing the fan tray to prevent overheating of the chassis.

To install a fan tray in a QFX3008-I Interconnect device (see Figure 247 on page 617):

1. Attach the ESD grounding strap to your bare wrist, and connect the strap to the ESD point on the chassis.
2. Hold the handle of the fan tray with one hand and support the weight of the tray with the other hand. Align the tray with the fan tray guides on the fan tray slot. Slide in the fan tray until it is fully seated in the chassis.
3. Hold the handle and the screw of the cover panel and align the cover panel at a slight angle to attach the handle end in to the slot.
4. Push the screw end of the cover panel in to the chassis.
5. Tighten the captive screw on the cover panel using your fingers.

Figure 247: Installing a Side Fan Tray in a QFX3008-I Interconnect Device

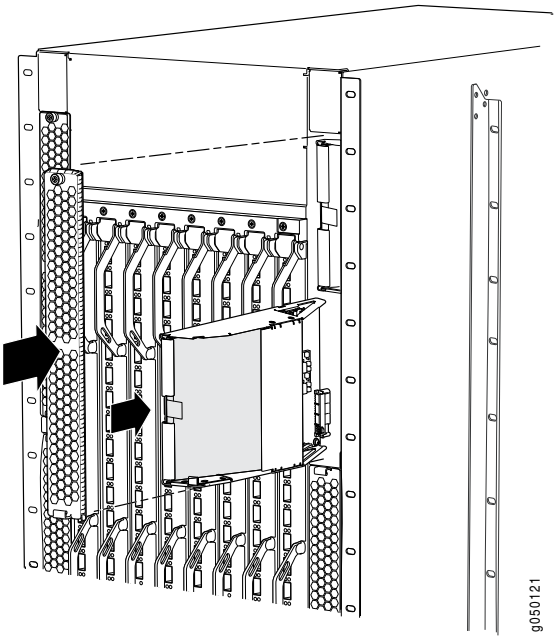

Related Documentation

- Cooling System and Airflow in a QFX3008-I Interconnect Device on page 48
- Removing a Side Fan Tray from a QFX3008-I Interconnect Device on page 614

Removing a Top Fan Tray from a QFX3008-I Interconnect Device

A QFX3008-I Interconnect device top fan tray is field-replaceable. and is hot-removable and hot-insertable; you can remove and replace the fan tray while the device is running without turning off power to the device or disrupting switching functions.

CAUTION: **Do not remove a fan tray unless you have a replacement fan tray available.**

The top fan tray installs horizontally at the top on the back of the chassis, behind a cover door. There are two captive screws at the top of the cover door to secure the cover door to the chassis.

Before you remove a top fan tray, ensure that you understand how to prevent ESD damage. See "Prevention of Electrostatic Discharge Damage" on page 360.

Ensure that you have the following parts and tools available to remove a top fan tray from a QFX3008-I Interconnect device:

- Electrostatic discharge (ESD) grounding strap
- Replacement top fan tray
- Phillips (+) screwdriver, number 2

CAUTION: **The fan trays can be removed and replaced while the QFX3008-I Interconnect device is operating. However, you must replace the fan tray within 2 minutes of removing the fan tray to prevent overheating of the chassis.**

To remove a fan tray from a QFX3008-I Interconnect device (see Figure 248 on page 619):

1. Attach the electrostatic discharge (ESD) grounding strap to your bare wrist, and connect the strap to the ESD point on the chassis.
2. Unscrew the captive screws on the cover door counterclockwise using your fingers. If you cannot easily unscrew the captive screws with your fingers, use the screwdriver.
3. Open the door, being careful to lower it gently, until it stops.
4. Turn the latch, located in the center of the fan tray, counterclockwise to release the tray.
5. Pull firmly on the latch to slide the fan tray about 5 in. (13 cm) out of the chassis.

WARNING: **There is no fan guard on the fans. Be careful to keep your fingers clear of the moving fan blades when you are removing the fan tray.**

Copyright © 2018, Juniper Networks, Inc.

To avoid injury, do not touch the fans with your hands or any tools as you slide the fan tray out of the chassis—the fans might still be spinning.

6. Wait for approximately 15 seconds to allow all the fans to stop spinning.
7. Slide the fan tray completely out of the chassis.

Figure 248: Removing a Top Fan Tray from a QFX3008-I Interconnect Device

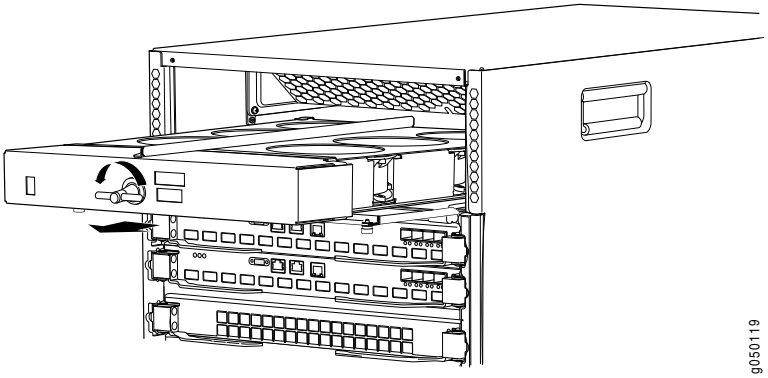

Related Documentation

- Installing a Top Fan Tray in a QFX3008-I Interconnect Device on page 619
- Cooling System and Airflow in a QFX3008-I Interconnect Device on page 48
- Field-Replaceable Units in a QFX3008-I Interconnect Device on page 42

Installing a Top Fan Tray in a QFX3008-I Interconnect Device

A QFX3008-I Interconnect device top fan tray is field-replaceable. and is hot-removable and hot-insertable; you can remove and replace the fan tray while the device is running without turning off power to the device or disrupting switching functions.

The top fan tray installs horizontally at the top on the back of the chassis, behind a cover door. There are two captive screws at the top of the cover door to secure the cover door to the chassis.

Before you begin to install a fan tray, ensure that you understand how to prevent ESD damage. See "Prevention of Electrostatic Discharge Damage" on page 360.

Ensure that you have the following parts and tools available to install a fan tray in a QFX3008-I Interconnect device:

- Electrostatic discharge (ESD) grounding strap
- Replacement fan tray

CAUTION: The fan trays can be removed and replaced while the QFX3008-I Interconnect device is operating. However, you must replace the fan tray within 2 minutes of removing the fan tray to prevent overheating of the chassis.

To install a fan tray in a QFX3008-I Interconnect device (see Figure 249 on page 620):

1. Attach the ESD grounding strap to your bare wrist, and connect the strap to the ESD point on the chassis
2. Align the tray with the fan tray guide on the top of the tray. Slide in the fan tray until it is fully seated in the chassis.
3. Turn the latch, located in the middle of the fan tray, clockwise to lock the fan tray in the chassis.
4. Close the cover door and tighten the captive screws on the faceplate using your fingers.

Figure 249: Installing a Top Fan Tray in a QFX3008-I Interconnect Device

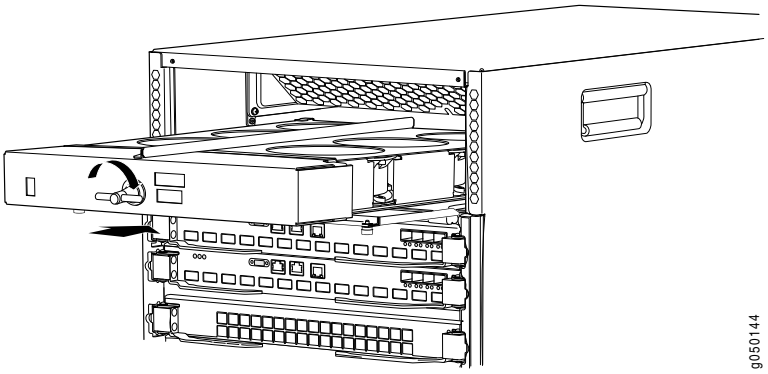

Related Documentation

- Removing a Top Fan Tray from a QFX3008-I Interconnect Device on page 618
- Cooling System and Airflow in a QFX3008-I Interconnect Device on page 48

Removing a Bottom Air Filter from a QFX3008-I Interconnect Device

A QFX3008-I Interconnect device bottom air filter is located beneath the bottom fan tray and front panel display. There are two captive screws on either side of the air filter door that secure the air filter in the chassis.

CAUTION: Do not run the device for more than 2 minutes without the air filter in place.

Copyright © 2018, Juniper Networks, Inc.

CAUTION: Always keep the air filter in place while the device is operating, except during replacement. Because the fans are very powerful, they could pull small bits of wire or other materials into the device through the unfiltered air intake. This could damage the device components.

Before you remove an air filter, ensure that you understand how to prevent ESD damage. See "Prevention of Electrostatic Discharge Damage" on page 360.

Ensure that you have the following parts and tools available to remove a bottom air filter from a QFX3008-I Interconnect device:

- Electrostatic discharge (ESD) grounding strap
- Replacement air filter
- Phillips (+) screwdriver, number 2

To remove a bottom air filter from a QFX3008-I Interconnect device (see Figure 250 on page 621):

1. Attach the ESD grounding strap to your bare wrist, and connect the strap to the ESD point on the chassis
2. Unscrew the captive screws counterclockwise using your fingers. If you cannot easily unscrew the captive screws with your fingers, use the screwdriver.
3. Open the door, being careful to lower it gently, until it stops.
4. Pull on the air filter tab, located in the center of the filter, and slide the air filter straight out.

Figure 250: Removing a Bottom Air Filter from a QFX3008-I Interconnect Device

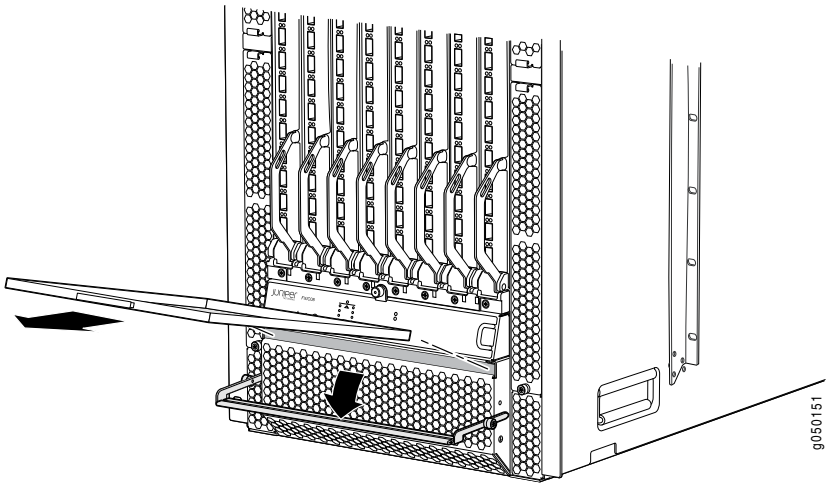

Related Documentation

- Installing a Bottom Air Filter in a QFX3008-I Interconnect Device on page 622

- Cooling System and Airflow in a QFX3008-I Interconnect Device on page 48
- Field-Replaceable Units in a QFX3008-I Interconnect Device on page 42

Installing a Bottom Air Filter in a QFX3008-I Interconnect Device

A QFX3008-I Interconnect device bottom air filter is located beneath the bottom fan tray and front panel display. Two captive screws on either side of the air filter door secure the air filter in the chassis.

CAUTION: **Do not run the device for more than 2 minutes without the air filter in place.**

CAUTION: **Always keep the air filter in place while the device is operating, except during replacement. Because the fans are very powerful, they could pull small bits of wire or other materials into the device through the unfiltered air intake. This could damage device components.**

Before you install a bottom air filter, ensure that you understand how to prevent ESD damage. See "Prevention of Electrostatic Discharge Damage" on page 360.

Ensure that you have the following parts and tools available to install a bottom air filter in a QFX3008-I Interconnect device:

- Electrostatic discharge (ESD) grounding strap

To install the air filter (see Figure 251 on page 623):

1. Attach an electrostatic discharge (ESD) grounding strap to your bare wrist, and connect the strap to one of the ESD points on the chassis.
2. If the air filter door is closed, unscrew the captive screws on each side of the air filter door, and pull the door open.
3. Slide the air filter into the chassis. The air filter has a label indicating which side should be facing up.
4. Close the air filter door, and tighten the captive screws on each side of the air filter door.

 Copyright © 2018, Juniper Networks, Inc.

Figure 251: Installing a Bottom Air Filter in a QFX3008-I Interconnect Device

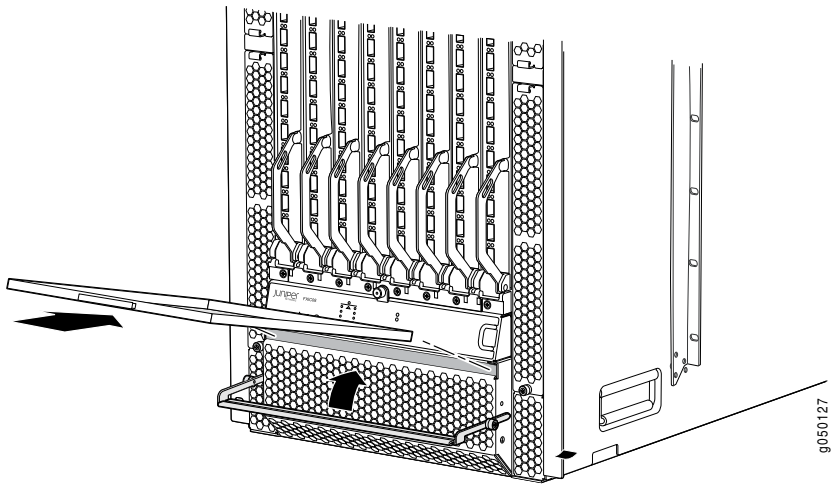

Related Documentation

- Cooling System and Airflow in a QFX3008-I Interconnect Device on page 48
- Removing a Bottom Air Filter from a QFX3008-I Interconnect Device on page 620
- Maintaining the Air Filters in a QFX3008-I Interconnect Device on page 719

Removing a Side Air Filter from a QFX3008-I Interconnect Device

The QFX3008-I Interconnect device has eight side air filters located in each of eight side fan tray modules. A tab on the air filter facilitates the removal and installation of the air filter.

CAUTION: Do not run the device for more than 2 minutes without the air filter in place.

CAUTION: Always keep the air filter in place while the device is operating, except during replacement. Because the fans are very powerful, they could pull small bits of wire or other materials into the device through the unfiltered air intake. This could damage device components.

Before you remove a side air filter, ensure that you understand how to prevent ESD damage. See "Prevention of Electrostatic Discharge Damage" on page 360.

Ensure that you have the following parts and tools available to remove a side air filter from a QFX3008-I Interconnect device:

- Electrostatic discharge (ESD) grounding strap
- Replacement air filter

- Phillips (+) screwdriver, number 2

To remove an air filter from a QFX3008-I Interconnect device (see Figure 252 on page 624 and Figure 253 on page 625):

1. Attach the ESD grounding strap to your bare wrist, and connect the strap to the ESD point on the chassis.
2. Unscrew the captive screw, located on each cover panel, counterclockwise using your fingers. If you cannot easily unscrew the captive screw with your fingers, use the screwdriver.
3. Hold the screw on the cover panel with one hand while holding the handle with the other. Pull firmly on the screw to detach the cover panel.
4. Pull the air filter tab to the side and slide the filter out of the fan tray module.

Figure 252: Removing a Side Fan Tray from a QFX3008-I Interconnect Device

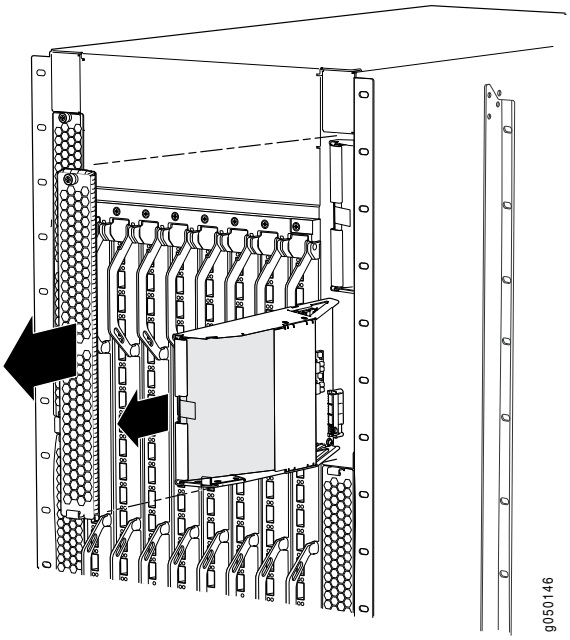

 Copyright © 2018, Juniper Networks, Inc.

Figure 253: Removing a Side Air Filter from a QFX3008-I Interconnect Device Side Fan Tray

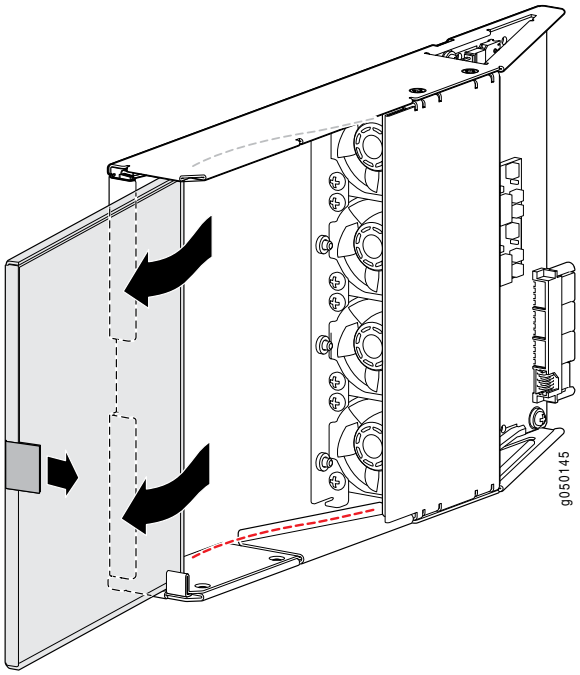

Related Documentation

- Installing a Side Air Filter in a QFX3008-I Interconnect Device on page 625
- Cooling System and Airflow in a QFX3008-I Interconnect Device on page 48
- Field-Replaceable Units in a QFX3008-I Interconnect Device on page 42

Installing a Side Air Filter in a QFX3008-I Interconnect Device

The QFX3008-I Interconnect device has eight side air filters located in each of eight side fan tray modules. A tab on the air filter facilitates the removal and installation of the air filter.

CAUTION: Do not run the device for more than 2 minutes without the air filter in place.

CAUTION: Always keep the air filter in place while the device is operating, except during replacement. Because the fans are very powerful, they could pull small bits of wire or other materials into the device through the unfiltered air intake. This could damage device components.

Before you remove an air filter, ensure that you understand how to prevent ESD damage. See "Prevention of Electrostatic Discharge Damage" on page 360.

Ensure that you have the following parts and tools available to remove a bottom air filter from a QFX3008-I Interconnect device:

- Electrostatic discharge (ESD) grounding strap

To install an air filter (see Figure 254 on page 626 and Figure 255 on page 627):

1. Attach an electrostatic discharge (ESD) grounding strap to your bare wrist, and connect the strap to one of the ESD points on the chassis.
2. Align the filter with the fan tray module so that it slides into the chassis at a slant.
3. Slide the air filter all the way into the slot.
4. Hold the handle and the screw of the cover panel and align the cover panel at a slight angle to attach the handle end to the slot.
5. Push the screw end of the cover panel into the chassis.
6. Tighten the captive screw on the cover panel using your fingers.

Figure 254: Installing a Side Air Filter in a QFX3008-I Interconnect Device Side Fan Tray

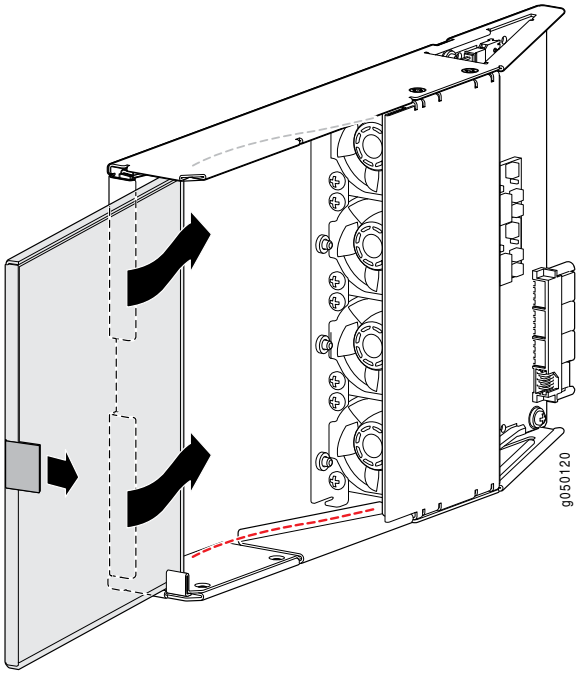

 Copyright © 2018, Juniper Networks, Inc.

Figure 255: Installing a Side Fan Tray in a QFX3008-I Interconnect Device

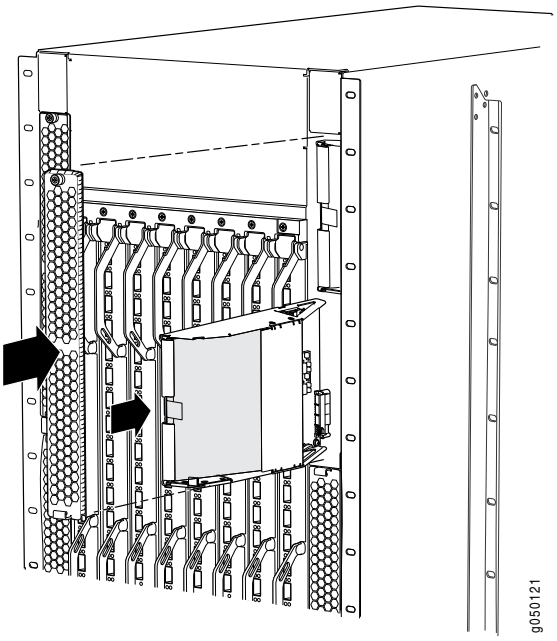

Related Documentation

- Removing a Side Air Filter from a QFX3008-I Interconnect Device on page 623
- Maintaining the Air Filters in a QFX3008-I Interconnect Device on page 719
- Cooling System and Airflow in a QFX3008-I Interconnect Device on page 48

Taking a Control Board Offline in a QFX3008-I Interconnect Device

If you are going to remove a Control Board from a QFX3008-I Interconnect device, take the Control Board offline before you remove it to preserve its configuration.

The Control Board performs Routing Engine functions in a QFX3008-I Interconnect device. There are two Control Boards installed in a QFX3008-I Interconnect device.

CAUTION: When you switch Control Board mastership, or when a master Control Board fails, no data traffic is forwarded over the QFX3008-I Interconnect device. Data traffic over other QFX3008-I Interconnect devices in your QFX3000 QFabric system is not disrupted.

NOTE: We recommend that you take the backup Control Board offline before removing it.

Before you offline a Control Board:

- Ensure that you have taken the necessary precautions to prevent electrostatic discharge (ESD) damage. See "Prevention of Electrostatic Discharge Damage" on page 360.
- Ensure that you do not need to forward traffic through the device.
- Determine whether the Control Board is the master or backup using one of these methods:
  - Check the **MASTER** LED on the Control Board faceplate. If the **MASTER** LED is lit steady green, the Control Board is the master.
  - Issue the **show chassis routing-engine** CLI command.

Ensure that you have the following parts and tools available to power off the device:

- An ESD grounding strap
- An external management device such as a PC
- An RJ-45 to DB-9 rollover cable to connect the external management device to the console (**CON**) port

To take the Control Board offline in a QFX3008-I Interconnect device, perform the tasks appropriate for your device:

1. Taking a Master Control Board Offline on page 628
2. Taking a Backup Control Board Offline on page 629

Taking a Master Control Board Offline

To take a master Control Board offline in a QFX3008-I Interconnect device:

1. Connect a management device to the console (**CONSOLE**) port on the master Control Board in the QFX3008-I Interconnect device. For instructions about connecting a management device to the console (**CONSOLE**) port, see "Connecting a QFX Series Device to a Management Console" on page 386.

2. Make the master Control Board the backup Control Board by using the **request chassis routing-engine master switch** CLI command.

   The current backup Control Board becomes the master Control Board after this command is issued.

   CAUTION: **Until the backup Control Board assumes mastership, no data traffic is forwarded over the QFX3008-I Interconnect device. Data traffic over other QFX3008-I Interconnect devices in your QFX3000 QFabric system is not disrupted.**

3. Use the **show chassis routing-engine** command to confirm that mastership has changed.

Copyright © 2018, Juniper Networks, Inc.

4. Connect the management device to the console (**CONSOLE**) port on the new master Control Board in the QFX3008-I Interconnect device.

5. Take the backup Control Board offline using the **request chassis cb offline interconnect-device *nameslot-number*** CLI command.

6. Use the **show chassis routing-engine** command to confirm that the Control Board is offline. When the state field in the command output shows that the card is offline, it is safe to remove the Control Board. See "Removing a Control Board from a QFX3008-I Interconnect Device" on page 629.

Taking a Backup Control Board Offline

To take the backup Control Board offline:

1. Connect a management device to the console (**CONSOLE**) port on the master Control Board in the QFX3008-I Interconnect device. For instructions about connecting a management device to the console (**CONSOLE**) port, see "Connecting a QFX Series Device to a Management Console" on page 386.

2. Take the backup Control Board offline using the **request system halt other-routing-engine** CLI command.

3. Use the **show chassis routing-engine** command to confirm that the Control Board is offline. When the state field in the command output shows that the card is offline, it is safe to remove the Control Board. See "Removing a Control Board from a QFX3008-I Interconnect Device" on page 629.

Related Documentation

- Installing a Control Board in a QFX3008-I Interconnect Device on page 631
- Control Board in a QFX3008-I Interconnect Device on page 53
- Control Board LEDs on a QFX3008-I Interconnect Device on page 729

Removing a Control Board from a QFX3008-I Interconnect Device

There are two Control Boards in a QFX3008-I Interconnect device. The Control Boards install horizontally in the rear of the chassis in the slots labeled **CB 0** and **CB 1**. See "Slot Numbering for a QFX3008-I Interconnect Device" on page 44.

CAUTION: Before you remove a Control Board, we recommend that you first take it offline. It is important to know whether you are removing the master or the backup Control Board.

See "Taking a Control Board Offline in a QFX3008-I Interconnect Device" on page 627 for more information.

CAUTION: When you switch Control Board mastership, or when a master Control Board fails, traffic is not forwarded over the QFX3008-I Interconnect device until the backup Control Board assumes mastership.

CAUTION: Do not lift modules by holding the ejector levers. The levers cannot support the weight of the module. Lifting the module by the levers might bend the levers, and the bent levers prevent the board from being properly seated in the chassis.

Before you begin to remove a Control Board:

- Ensure that you understand how to prevent ESD damage. See "Prevention of Electrostatic Discharge Damage" on page 360.
- (Recommended) Take the Control Board offline. See "Taking a Control Board Offline in a QFX3008-I Interconnect Device" on page 627.

Ensure that you have the following parts and tools available to remove a Control Board from a QFX3008-I Interconnect device:

- Electrostatic discharge (ESD) grounding strap
- Antistatic bag or antistatic mat
- Replacement Control Board

To remove a Control Board from a QFX3008-I Interconnect device (see Figure 256 on page 631):

1. Attach the ESD grounding strap to your bare wrist, and connect the strap to the ESD point on the chassis.
2. Place the antistatic bag or antistatic mat on a flat, stable surface.
3. Pull both the ejector levers outward simultaneously, away from the faceplate of the Control Board, until they go no further. This action causes the Control Board to slide out of the chassis slightly.
4. Grasp the ejector levers and pull the Control Board out about halfway.
5. Taking care not to touch the leads, pins, or solder connections, place one hand underneath the Control Board to support it, and slide it completely out of the chassis.
6. Place the Control Board in the antistatic bag or on the antistatic mat.

Copyright © 2018, Juniper Networks, Inc.

Figure 256: Removing a Control Board from a QFX3008-I Interconnect Device

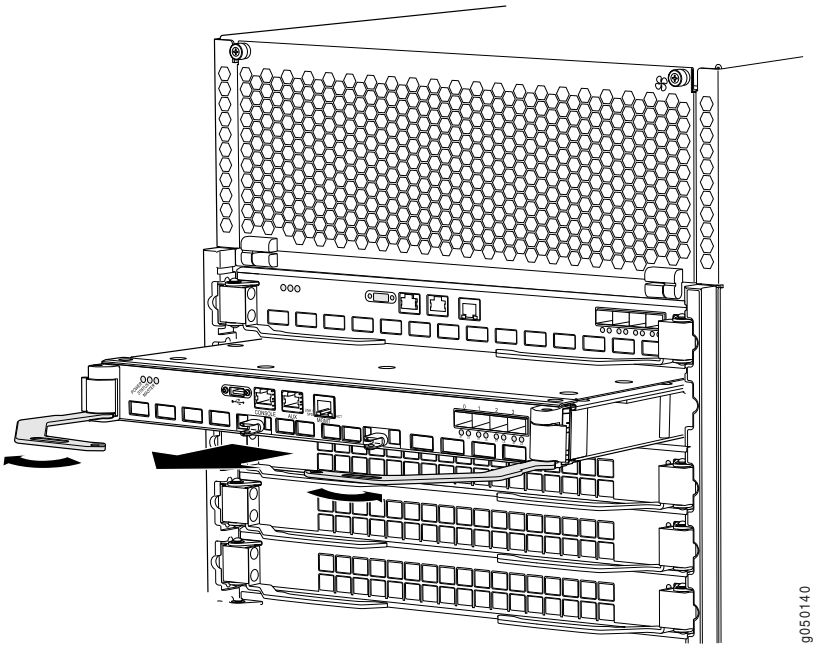

Related Documentation

- Installing a Control Board in a QFX3008-I Interconnect Device on page 631
- Control Board in a QFX3008-I Interconnect Device on page 53
- Control Board LEDs on a QFX3008-I Interconnect Device on page 729

Installing a Control Board in a QFX3008-I Interconnect Device

There are two Control Boards in a QFX3008-I Interconnect device. The Control Boards install horizontally in the rear of the chassis in the slots labeled **CB 0** and **CB 1**. See "Slot Numbering for a QFX3008-I Interconnect Device" on page 44.

CAUTION: Do not lift modules by holding the ejector levers. The levers cannot support the weight of the module. Lifting the module by the levers might bend the levers, and the bent levers prevent the board from being properly seated in the chassis.

NOTE: When you install a new Control Board in the QFX3008-I Interconnect device, the Junos OS is updated to the same version that is running on the QFX3100 Director group.

Before you begin installing a Control Board in a QFX3008-I Interconnect device, ensure that you understand how to prevent ESD damage. See "Prevention of Electrostatic Discharge Damage" on page 360.

Ensure that you have the following parts and tools available to install a Control Board:

- Electrostatic discharge (ESD) grounding strap
- Replacement Control Board

To install a Control Board in a QFX3008-I Interconnect device (see Figure 257 on page 633):

1. Attach the ESD grounding strap to your bare wrist, and connect the strap to the ESD point on the chassis.

2. Taking care not to touch the leads, pins, or solder connections, pull the Control Board out from the bag.

3. Pull both the ejector levers outward simultaneously, away from the faceplate of the Control Board, until they go no further.

4. Carefully align the sides of the Control Board with the guides inside the chassis.

5. Ensuring that the Control Board is correctly aligned, carefully slide it into the chassis until you feel resistance.

6. Push both the ejector levers simultaneously toward the faceplate of the Control Board until the levers are flush against the faceplate and are fully engaged.

   CAUTION: **Ensure that you push the ejector levers evenly and that both ejector levers are completely engaged. It is possible for the board to receive power if only one of the levers is fully closed, causing a device malfunction.**

7. Verify that the Control Board is installed correctly and functioning normally by checking the LEDs on the faceplate of the Control Board. The **POWER** LED and **STATUS** LED should be lit steady green a few minutes after the Control Board is installed.

Copyright © 2018, Juniper Networks, Inc.

Figure 257: Installing a Control Board in a QFX3008-I Interconnect Device

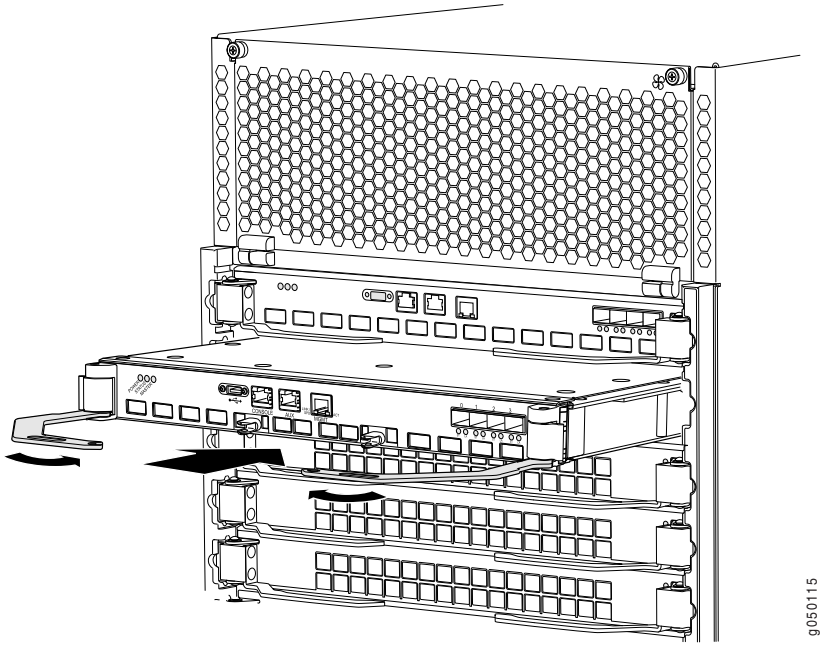

Related Documentation

- Control Board in a QFX3008-I Interconnect Device on page 53
- Control Board LEDs on a QFX3008-I Interconnect Device on page 729

Taking a 16-Port QSFP+ Front Card Offline in a QFX3008-I Interconnect Device

To prevent data loss, we recommend that you take a 16-port QSFP+ front card offline before removing it from a QFX3008-I Interconnect device.

To take the front card offline in a QFX3008-I Interconnect device:

1. Use the **request chassis fpc interconnect-device *name* slot *slot-number* offline** CLI command. Enter the name of the device in which the front card you want to remove is installed, and the number of the slot from which you are removing the front card; the slots are numbered from **0** through **7**. See "Slot Numbering for a QFX3008-I Interconnect Device" on page 44.

2. Use the **show chassis fpc** CLI command to verify that the front card is offline. When the state field in the command output shows that the card is offline, it is safe to remove the front card. See "Removing a 16-Port QSFP+ Front Card from a QFX3008-I Interconnect Device" on page 634.

Related Documentation

- Installing a 16-Port QSFP+ Front Card in a QFX3008-I Interconnect Device on page 636
- 16-Port QSFP+ Front Cards in a QFX3008-I Interconnect Device on page 52

- 16-Port QSFP+ Front Card LEDs on a QFX3008-I Interconnect Device on page 731

Removing a 16-Port QSFP+ Front Card from a QFX3008-I Interconnect Device

You can install up to eight 16-port QSFP+ front cards in a QFX3008-I Interconnect device. The front cards are installed vertically in the front of the chassis in the slots labeled **0** through **7**. See "Slot Numbering for a QFX3008-I Interconnect Device" on page 44.

CAUTION: **Before you remove a front card, we recommend that you take it offline to prevent the loss of data packets. See "Taking a 16-Port QSFP+ Front Card Offline in a QFX3008-I Interconnect Device" on page 633.**

CAUTION: **Do not lift modules by holding the ejector levers. The levers cannot support the weight of the module. Lifting the module by the levers might bend the levers, and the bent levers prevent the board from being properly seated in the chassis.**

Before you begin to remove a front card:

- Ensure that you understand how to prevent ESD damage. See "Prevention of Electrostatic Discharge Damage" on page 360.
- (Recommended) Take the front card offline. See "Taking a 16-Port QSFP+ Front Card Offline in a QFX3008-I Interconnect Device" on page 633.

Ensure that you have the following parts and tools available to remove a front card from a QFX3008-I Interconnect device:

- Electrostatic discharge (ESD) grounding strap
- Antistatic bag or antistatic mat
- Replacement front card or front card cover panel

To remove a front card (see Figure 258 on page 635):

1. Attach the ESD grounding strap to your bare wrist, and connect the strap to the ESD point on the chassis.
2. Place the antistatic bag or antistatic mat on a flat, stable surface.
3. Pull both the ejector levers outward simultaneously, away from the faceplate of the front card, until they go no further. This action causes the card to slide out of the chassis slightly.
4. Grasp the handle on the faceplate of the front card with one hand, and pull the card about halfway out.

 Copyright © 2018, Juniper Networks, Inc.

5. Taking care not to touch the leads, pins, or solder connections, place the other hand on the base of the front card to support its weight and slide it out of the chassis completely.

6. Place the front card in the antistatic bag or on the antistatic mat.

7. If you are not replacing the front card, install the cover panel over the empty slot by rotating the knob on the top and bottom of the cover panel to the closed position.

Figure 258: Removing a 16-Port Front Card from a QFX3008-I Interconnect Device

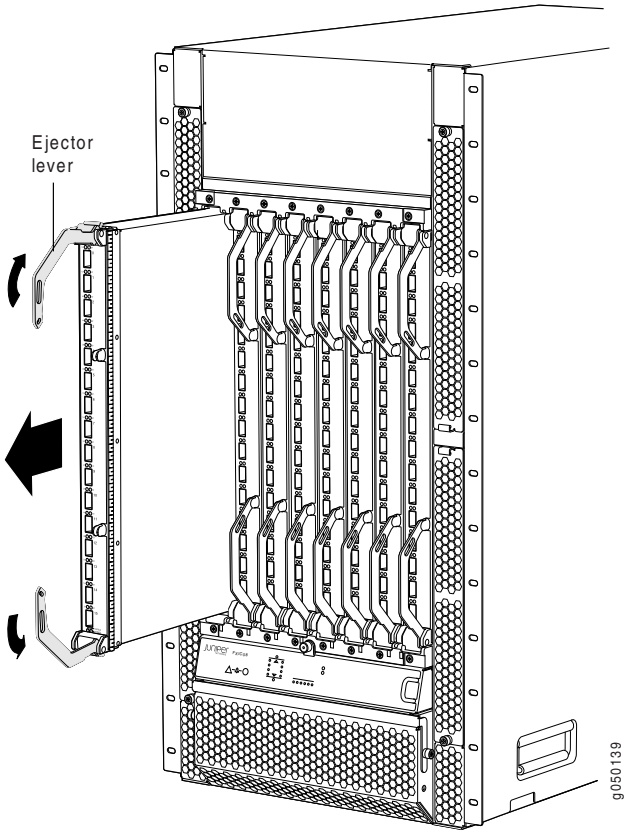

Related Documentation

- Installing a 16-Port QSFP+ Front Card in a QFX3008-I Interconnect Device on page 636
- 16-Port QSFP+ Front Cards in a QFX3008-I Interconnect Device on page 52
- 16-Port QSFP+ Front Card LEDs on a QFX3008-I Interconnect Device on page 731

Installing a 16-Port QSFP+ Front Card in a QFX3008-I Interconnect Device

You can install up to eight 16-port QSFP+ front cards in a QFX3008-I Interconnect device. The front cards are installed vertically in the front of the chassis in the slots labeled **0** through **7**. See "Slot Numbering for a QFX3008-I Interconnect Device" on page 44.

CAUTION: **Do not lift modules by holding the ejector levers. The levers cannot support the weight of the module. Lifting the module by the levers might bend the levers, and the bent levers prevent the board from being properly seated in the chassis.**

NOTE: **You can install front cards in any slot. You do not have to install the front cards in serial order.**

Before you begin installing a front card in a QFX3008-I Interconnect device, ensure that you understand how to prevent ESD damage. See "Prevention of Electrostatic Discharge Damage" on page 360.

Ensure that you have the following parts and tools available to install a front card:

- Electrostatic discharge (ESD) grounding strap
- Replacement front card

To install a front card in a QFX3008-I Interconnect device (see Figure 259 on page 638):

1. Attach the ESD grounding strap to your bare wrist, and connect the strap to the ESD point on the chassis.
2. If the slot has a cover panel on it, rotate the knob on each side of the cover panel to the open position and remove the panel. Save the cover panel for later use.
3. Taking care not to touch the leads, pins, or solder connections, pull the front card out from the bag.
4. Pull both the ejector levers outward simultaneously, away from the faceplate of the front card, until they go no further.
5. Turn the front card so that you can insert it in one of the vertical slots. Then hold the handle with one hand and support the base of the front card with the other hand as you align the front card with the guides inside the chassis.
6. Ensuring that the card remains correctly aligned, slide the front card into the chassis until you feel resistance.

Copyright © 2018, Juniper Networks, Inc.

Ensure that the ejector levers are engaged in the horizontal ejector rail. If the levers are not engaged, push the card's faceplate just inside the hinges of the levers until the ejectors are engaged in the ejector rail.

7. Push both the ejector levers simultaneously toward the faceplate of the front card until the levers are flush against the faceplate and are fully engaged.

   CAUTION: **Ensure that you push the ejector levers evenly and that both ejector levers are completely engaged. It is possible for the board to receive power if only one of the levers is fully closed, causing a device malfunction.**

8. Verify that the front card is installed correctly and functioning normally by checking the LEDs on the faceplate of the front card. The **STATUS** LED and **POWER** LED should be lit steady green a few minutes after the front card is installed.

9. Verify that the new device is inserted into the fabric using the **show fabric administration inventory interconnect-devices** operational mode command from the QFabric default partition CLI.

```
root@qfabric> show fabric administration inventory interconnect-devices
Item                    Identifier              Connection      Configuration
Interconnect device
  IC-QFX3713490033                               Connected       Configured
    QFX3713490033/RE0                            Connected
  IC-QFXB3714010454                              Connected       Configured
    QFX3714010454/RE0                            Connected

root@qfabric>
```

10. From the QFabric director, enter the following configuration mode CLI commands to remove the previous rear card from the inventory of QFabric system components and associate the serial number of the new rear card with the alias of the previous card.

```
root@fabric# delete fabric aliases interconnect-devices
old-serial-numberalias-name
root@fabric# set fabric aliases interconnect-devices new-serial-numberalias-name
```

11. Commit the changes using the **commit** command, which sends the configuration of the old device to the new device.

Figure 259: Installing 16-Port QSFP+ Front Card in a QFX3008-I Interconnect Device

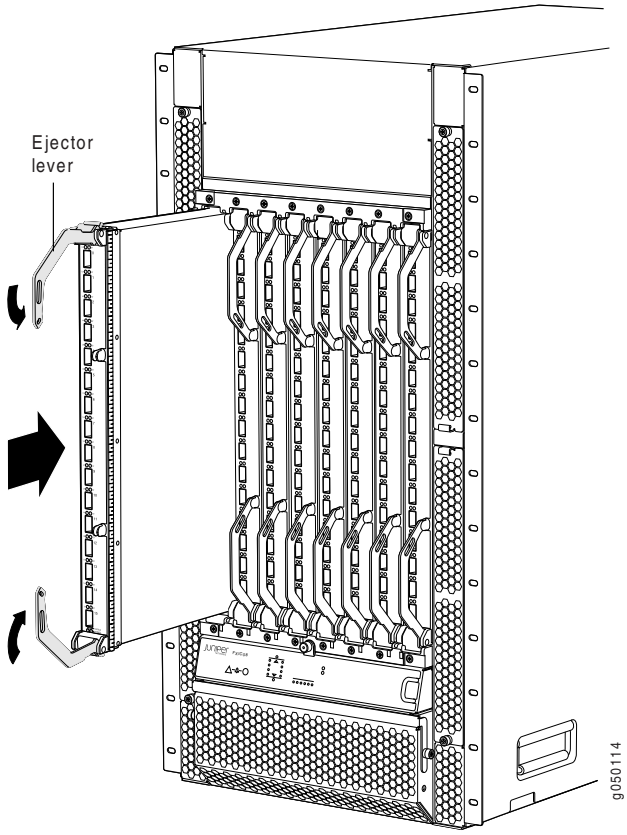

Related Documentation

- 16-Port QSFP+ Front Cards in a QFX3008-I Interconnect Device on page 52
- 16-Port QSFP+ Front Card LEDs on a QFX3008-I Interconnect Device on page 731

Taking the Rear Card Offline in a QFX3008-I Interconnect Device

To prevent data loss, we recommend that you take a rear card offline and power it off before removing it from a QFX3008-I Interconnect device.

The rear cards provide switching functionality for a QFX3000-G QFabric system. We recommend that you install all eight rear cards in each QFX3008-I Interconnect device for normal device operation. When you take a rear card offline, the switching capacity of the QFX3000-G QFabric system will be reduced until the rear card is replaced.

To take the rear card offline in a QFX3008-I Interconnect device:

1. Log into the QFabric default partion on the Director device and start the CLI.

```
[root@dg0] # cli
```

 Copyright © 2018, Juniper Networks, Inc.

2. Discover the device connection status and the alias name (identifier) by issuing the **show fabric administration inventory interconnect-devices** command.

```
root@qfabric> show fabric administration inventory interconnect-devices
Item                    Identifier              Connection      Configuration
Interconnect device
  IC-QFX3713490033                               Connected       Configured
    QFX3713490033/RE0                            Connected
  IC-QFXB3714010454                              Connected       Configured
    QFX3714010454/RE0                            Connected

root@qfabric>
```

   The card must show as **connected** and **configured** in order to have an orderly shutdown.

3. Issue the **request fabric administration power-off interconnect-device** ***serial-id |alias-name*** **fpc** ***slot*** operational mode command from the QFabric default partition CLI. This command systematically takes the node offline and gracefully shuts down the device while preserving system state information. Use the name of the Interconnect device in which the rear card you want to remove is installed, and the number of the slot from which you are removing the rear card; the slots are numbered from **8** through **15**. See "Slot Numbering for a QFX3008-I Interconnect Device" on page 44.

   You see output similar to the following after entering the command:

```
root@qfabric> request fabric administration power-off interconnect-device
IC-A0004 fpc 13
STEP 1 of 6 (Acquiring lock):
Acquiring lock to perform this operation
Acquired lock to perform this operation
STEP 2 of 6 (Performing pre-checks):
interconnect-device IC-A0004 is online
STEP 3 of 6 (Gracefully offlining the interconnect linecard):
Gracefully offlining the fpc
fpc is successfully offlined
STEP 4 of 6 (Waiting for convergence):
Waiting for convergence(this will take few minutes)
request fabric administration power-off interconnect-device IC-A0004
Convergence complete
STEP 5 of 6 (Powering-off the interconnect linecard):
Now, powering-off the fpc on the interconnect-device
Powered-off the fpc on the interconnect-device
STEP 6 of 6 (Releasing lock):
Releasing the lock

root@qfabric>
```

CAUTION: The final output of the **request fabric administration power-off interconnect-devices** ***serial-id |alias-name*** **fpc** ***slot*** CLI command is the following message: **The device is shutting down and can be removed when the LCDs are off**. Wait at least 3 to 4 minutes after first seeing this message before following the instructions in "Removing a Rear Card from a QFX3008-I Interconnect Device" on page 640.

Related Documentation

- Installing a Rear Card in a QFX3008-I Interconnect Device on page 641
- Rear Cards in a QFX3008-I Interconnect Device on page 55
- Rear Card LEDs on a QFX3008-I Interconnect Device on page 733

Removing a Rear Card from a QFX3008-I Interconnect Device

There are eight rear cards in a QFX3008-I Interconnect device. The rear cards are installed horizontally in the rear of the chassis in the slots labeled **0** through **7**. See "Slot Numbering for a QFX3008-I Interconnect Device" on page 44.

CAUTION: **Before you remove a rear card, we recommend that you take it offline. See "Taking the Rear Card Offline in a QFX3008-I Interconnect Device" on page 638 for more information.**

CAUTION: **Do not lift modules by holding the ejector levers. The levers cannot support the weight of the module. Lifting the module by the levers might bend the levers, and the bent levers prevent the board from being properly seated in the chassis.**

Before you begin to remove a rear card:

- Ensure that you understand how to prevent ESD damage. See "Prevention of Electrostatic Discharge Damage" on page 360.
- (Recommended) Take the rear card offline. See "Taking the Rear Card Offline in a QFX3008-I Interconnect Device" on page 638.

Ensure that you have the following parts and tools available to remove a rear card from a QFX3008-I Interconnect device:

- Electrostatic discharge (ESD) grounding strap
- Antistatic bag or antistatic mat
- Replacement rear card

To remove a rear card (see Figure 260 on page 641):

1. Attach the ESD grounding strap to your bare wrist, and connect the strap to the ESD point on the chassis.
2. Place the antistatic bag or antistatic mat on a flat, stable surface.
3. Pull both the ejector levers outward simultaneously, away from the faceplate of the rear card, until they go no further. This action causes the rear card to slide out of the chassis slightly.

Copyright © 2018, Juniper Networks, Inc.

4. Grasping the ejector levers, pull the rear card about halfway out.

5. Taking care not to touch the leads, pins, or solder connections, place one hand underneath the rear card to support it, and slide it out of the chassis completely.

6. Place the rear card in the antistatic bag or on the antistatic mat.

Figure 260: Removing a Rear Card from a QFX3008-I Interconnect Device

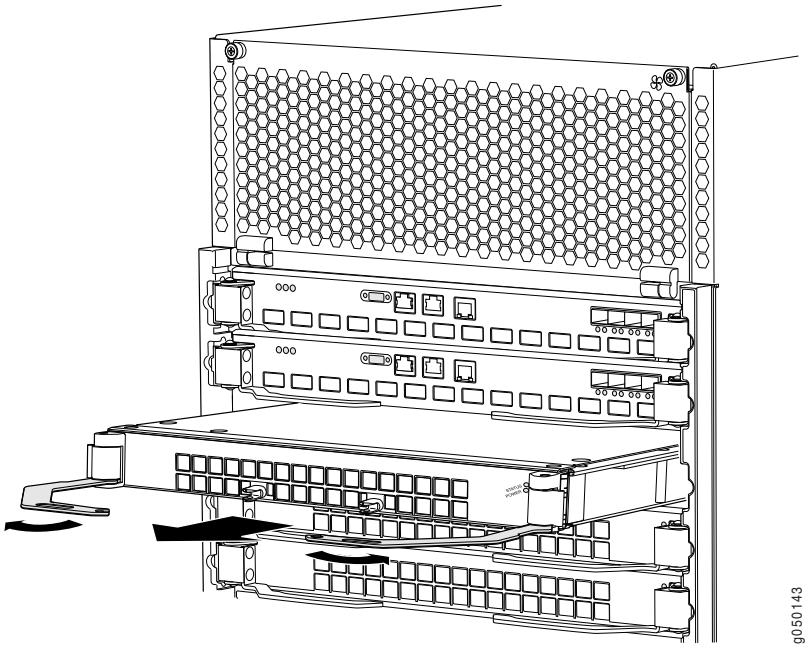

Related Documentation

- Rear Cards in a QFX3008-I Interconnect Device on page 55
- Rear Card LEDs on a QFX3008-I Interconnect Device on page 733
- Installing a Rear Card in a QFX3008-I Interconnect Device on page 641

Installing a Rear Card in a QFX3008-I Interconnect Device

There are eight rear cards in a QFX3008-I Interconnect device. The rear cards are installed horizontally in the rear of the chassis in the slots labeled **0** through **7**. See "Slot Numbering for a QFX3008-I Interconnect Device" on page 44.

CAUTION: Do not lift modules by holding the ejector levers. The levers cannot support the weight of the module. Lifting the module by the levers might bend the levers, and the bent levers prevent the board from being properly seated in the chassis.

Before you begin installing a rear card in a QFX3008-I Interconnect device, ensure that you understand how to prevent ESD damage. See "Prevention of Electrostatic Discharge Damage" on page 360.

Ensure that you have the following parts and tools available to install a rear card:

- Electrostatic discharge (ESD) grounding strap
- Replacement rear card

To install a rear card in a QFX3008-I Interconnect device (see Figure 261 on page 643):

1. Attach the ESD grounding strap to your bare wrist, and connect the strap to the ESD point on the chassis.

2. Taking care not to touch the leads, pins, or solder connections, pull the rear card out from the bag.

3. Pull both the ejector levers outward simultaneously, away from the faceplate of the rear card, until they go no further.

4. Carefully align the sides of the rear card with the guides inside the chassis.

5. Ensuring that the rear card is correctly aligned, carefully slide it into the chassis until you feel resistance.

6. Push both the ejector levers toward the faceplate of the rear card until the levers are flush against the faceplate and are fully engaged.

   CAUTION: **Ensure that you push the ejector levers evenly and both ejector levers are completely engaged. It is possible for the board to receive power if only one of the levers is fully closed, causing a device malfunction.**

7. Verify that the rear card is installed correctly and functioning normally by checking the LEDs on the faceplate of the rear card. The **STATUS** LED and **POWER** LED should be lit steady green a few minutes after the rear card is installed.

8. Verify that the new device is inserted into the fabric using the **show fabric administration inventory interconnect-devices** operational mode command from the QFabric default partition CLI.

```
root@qfabric> show fabric administration inventory interconnect-devices
Item                    Identifier              Connection      Configuration
Interconnect device
  IC-QFX3713490033                               Connected       Configured
    QFX3713490033/RE0                            Connected
  IC-QFXB3714010454                              Connected       Configured
    QFX3714010454/RE0                            Connected
```

 Copyright © 2018, Juniper Networks, Inc.

```
root@qfabric>
```

9. From the QFabric director, enter the following configuration mode CLI commands to remove the previous rear card from the inventory of QFabric system components and associate the serial number of the new rear card with the alias of the previous card.

```
root@fabric# delete fabric aliases interconnect-devices
old-serial-numberalias-name
root@fabric# set fabric aliases interconnect-devices new-serial-numberalias-name
```

10. Commit the changes using the **commit** command, which sends the configuration of the old device to the new device.

Figure 261: Installing a Rear Card in a QFX3008-I Interconnect Device

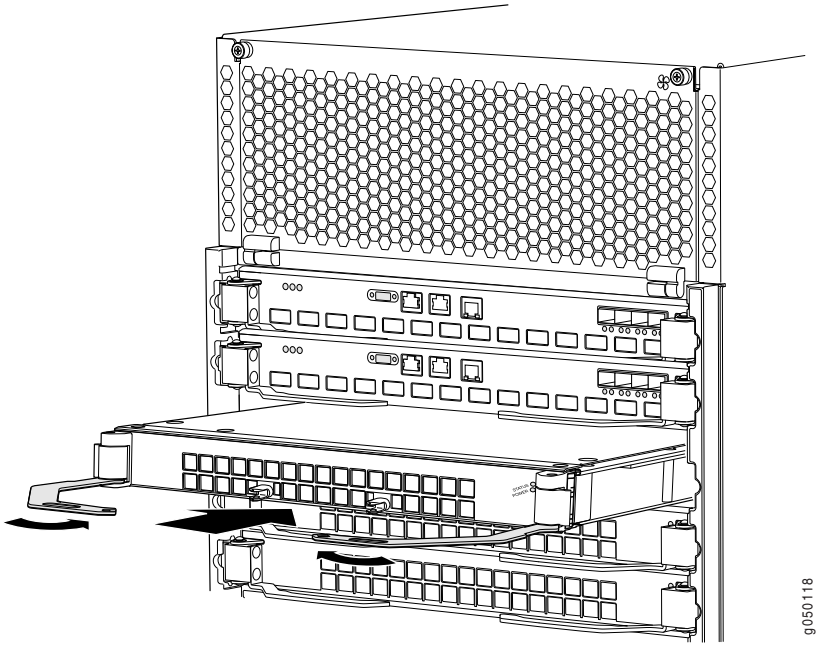

Related Documentation

- Rear Cards in a QFX3008-I Interconnect Device on page 55
- Rear Card LEDs on a QFX3008-I Interconnect Device on page 733

Copyright © 2018, Juniper Networks, Inc.

CHAPTER 42

Replacing QFX3500 Components

- Installing and Removing QFX3500 Device Hardware Components on page 645
- Installing a Power Supply in a QFX3500 Device on page 646
- Removing a Power Supply from a QFX3500 Device on page 648
- Installing a Fan Tray in a QFX3500 Device on page 649
- Removing a Fan Tray from a QFX3500 Device on page 651
- Installing a Management Board in a QFX3500 Device on page 652
- Removing a Management Board from a QFX3500 Device on page 654

Installing and Removing QFX3500 Device Hardware Components

The QFX3500 device chassis is a rigid sheet-metal structure that houses the hardware components. The field-replaceable units (FRUs) in QFX3500 devices are:

- Power supply
- Fan tray
- Management board
- SFP transceiver
- SFP+ transceiver
- QSFP+ transceiver

All of the QFX3500 device FRUs except the management board are hot-insertable and hot-removable: you can remove and replace them without powering off the device or disrupting device functions. You must power off the QFX3500 device before replacing the management board.

CAUTION: **Replace a failed power supply with a blank panel or new power supply within 1 minute of removal to prevent chassis overheating. Replace a failed fan tray with a new fan tray within 1 minute of removal to prevent chassis overheating.**

To install a power supply in a QFX3500 device, follow the instructions in "Installing a Power Supply in a QFX3500 Device" on page 646. To remove a power supply from a

QFX3500 device, follow the instructions in "Removing a Power Supply from a QFX3500 Device" on page 648.

To install a fan tray in a QFX3500 device, follow the instructions in "Installing a Fan Tray in a QFX3500 Device" on page 649. To remove a fan tray from a QFX3500 device, follow the instructions in "Removing a Fan Tray from a QFX3500 Device" on page 651.

To install a management board in a QFX3500 device, follow the instructions in "Installing a Management Board in a QFX3500 Device" on page 652. To remove a management board from a QFX3500 device, follow the instructions in "Removing a Management Board from a QFX3500 Device" on page 654.

To install an SFP, SFP+, or QSFP+ transceiver in a QFX3500 device, follow the instructions in "Installing a Transceiver in a QFX Series Device" on page 709. To remove an SFP, SFP+, or QSFP+ transceiver from a QFX3500 device, follow the instructions in "Removing a Transceiver from a QFX Series Device" on page 707.

To connect a fiber-optic cable to an SFP, SFP+, or QSFP+ transceiver in a QFX3500 device, follow the instructions in "Connecting a Fiber-Optic Cable to a QFX Series Device" on page 712. To disconnect a fiber-optic cable from an SFP, SFP+, or QSFP+ transceiver from a QFX3500 device, follow the instructions in "Disconnecting a Fiber-Optic Cable from a QFX Series Device" on page 711.

Related Documentation

- AC Power Supply for a QFX3500, QFX3600, or QFX3600-I Device on page 110
- Cooling System and Airflow for a QFX3500 Device on page 124
- Rear Panel of a QFX3500 Device on page 123
- Determining Transceiver Support for QFabric Systems on page 258

Installing a Power Supply in a QFX3500 Device

The QFX3500 is shipped from the factory with two 650 W power supplies pre-installed. Each power supply is a hot-removable and hot-insertable field-replaceable unit (FRU) when the second power supply is installed and running. You can install replacement power supplies without powering off the device or disrupting the switching function.

- Before you install a power supply in a QFX3500 device, ensure that you have taken the necessary precautions to prevent electrostatic discharge (ESD) damage (see "Prevention of Electrostatic Discharge Damage" on page 360).
- Ensure that the airflow direction of the power supply is the same as the chassis. Labels on the power supply handle indicate the direction of airflow. See "Cooling System and Airflow for a QFX3500 Device" on page 124 for more information.
- Ensure that you have the following parts and tools available to install a power supply in a QFX3500 device:
  - ESD grounding strap

To install a power supply in a QFX3500 device (see Figure 262 on page 647):

 Copyright © 2018, Juniper Networks, Inc.

1. Attach the ESD grounding strap to your bare wrist, and connect the strap to the ESD point on the chassis.

2. Taking care not to touch power supply components, pins, leads, or solder connections, remove the power supply from its bag.

   CAUTION: Verify that the direction of the arrow on the power supply handle matches the direction of airflow in the chassis. Ensure that each power supply you install in the chassis has the same airflow direction. If you install power supplies with two different airflow directions, Junos OS raises an alarm, and the status (OK/!) LED blinks amber.

3. Using both hands, place the power supply in the power supply slot on the front panel of the device and slide it in until it is fully seated and the locking lever slides into place.

Figure 262: Installing a Power Supply in a QFX3500 Device

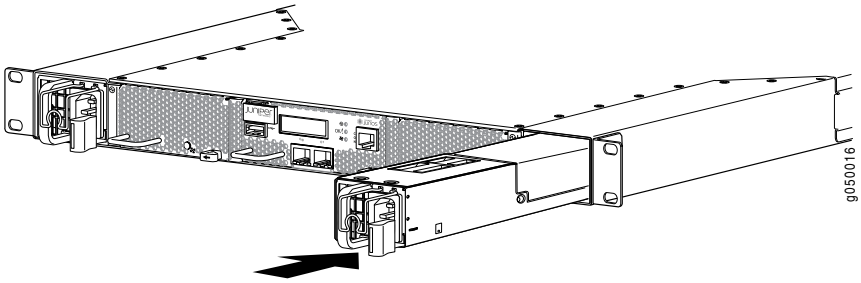

NOTE: Each power supply must be connected to a dedicated power source outlet.

NOTE: If you have a Juniper Care service contract, register any addition, change, or upgrade of hardware components at https://www.juniper.net/customers/support/tools/updateinstallbase/ . Failure to do so can result in significant delays if you need replacement parts. This note does not apply if you replace existing components with the same type of component.

Related Documentation

- AC Power Supply for a QFX3500, QFX3600, or QFX3600-I Device on page 110
- Field-Replaceable Units in a QFX3500 Device on page 119
- Front Panel of a QFX3500 Device on page 122
- AC Power Cord Specifications for a QFX Series Device on page 292
- Connecting AC Power to a QFX3500, QFX3600, or QFX3600-I Device on page 463

Copyright © 2018, Juniper Networks, Inc.

- Connecting DC Power to a QFX3500, QFX3600, or QFX3600-I Device on page 466
- Removing a Power Supply from a QFX3500 Device on page 648

Removing a Power Supply from a QFX3500 Device

The QFX3500 is shipped from the factory with two 650 W power supplies pre-installed. Each power supply is a hot-removable and hot-insertable field-replaceable unit (FRU) when the second power supply is installed and running. You can install replacement power supplies without powering off the device or disrupting the switching function.

Before you remove a power supply from a QFX3500 device, ensure that you have taken the necessary precautions to prevent electrostatic discharge (ESD) damage (see "Prevention of Electrostatic Discharge Damage" on page 360).

Ensure that you have the following parts and tools available to remove a power supply from a QFX3500 device:

- ESD grounding strap
- Antistatic bag or an antistatic mat
- Phillips (+) screwdriver, number 2 (DC power supply)

CAUTION: **Replace the power supply with a blank panel or new power supply within 1 minute of removal to prevent chassis overheating.**

To remove a power supply from a QFX3500 device (see Figure 263 on page 649):

1. Place the antistatic bag or the antistatic mat on a flat, stable surface.

2. Attach the ESD grounding strap to your bare wrist, and connect the strap to the ESD point on the chassis.

   NOTE: **If only one power supply is installed in your QFX3500 device, you need to power off the device before removing the power supply. See *Powering Off a QFX3500 Device*.**

3. Disconnect power to the device:

   - AC power supply—If the AC power source outlet has a power switch, set it to the OFF (O) position. If the AC power source outlet does not have a power switch, gently pull out the male end of the power cord connected to the power source outlet.
   - DC power supply—Switch the circuit breaker on the panel board that services the DC circuit to the OFF position.

Copyright © 2018, Juniper Networks, Inc.

4. Remove the power source cable from the power supply faceplate:
   - AC power supply—Remove the power cord from the power supply faceplate by detaching the power cord retainer and gently pulling out the female end of the power cord connected to the power supply faceplate.
   - DC power supply—Remove the screws securing the ring lugs attached to the power source cables to the power supply using the screwdriver, and remove the power source cables from the power supply. Replace the screws on the terminals and tighten them.
5. Slide the locking lever toward the handle until it stops.
6. Grasp the power supply handle and pull firmly to slide the power supply halfway out of the chassis.
7. Place one hand under the power supply to support it and slide it completely out of the chassis. Take care not to touch power supply components, pins, leads, or solder connections.
8. Place the power supply in the antistatic bag or on the antistatic mat placed on a flat, stable surface.

Figure 263: Removing a Power Supply from a QFX3500 Device

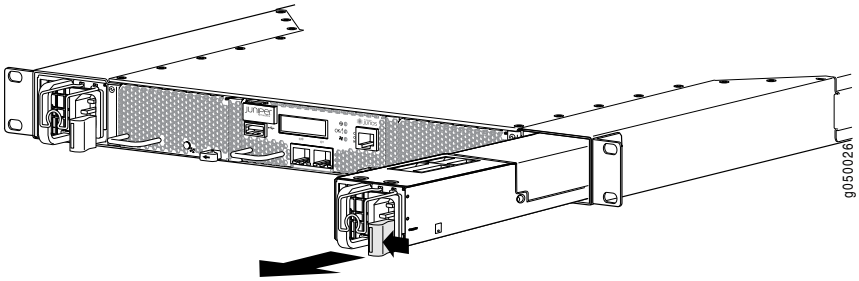

Related Documentation

- AC Power Supply for a QFX3500, QFX3600, or QFX3600-I Device on page 110
- Connecting AC Power to a QFX3500, QFX3600, or QFX3600-I Device on page 463
- Installing a Power Supply in a QFX3500 Device on page 646

Installing a Fan Tray in a QFX3500 Device

The fan trays in a QFX3500 device are hot-removable and hot-insertable field-replaceable units (FRUs): you can remove and replace them without powering off the device or disrupting device functions.

CAUTION: Replace a failed fan tray with a new fan tray within 1 minute of removal to prevent chassis overheating. Before removing the fan tray, ensure you have a replacement fan tray.

NOTE: The fan tray provides FRU-to-port or port-to-FRU airflow depending on the device model you purchase.

Before you install a fan tray in a QFX3500 device, ensure that you have taken the necessary precautions to prevent electrostatic discharge (ESD) damage (see "Prevention of Electrostatic Discharge Damage" on page 360).

Ensure that you have the following parts and tools available to install a fan tray in a QFX3500 device:

- ESD grounding strap

To install a fan tray in a QFX3500 device (see Figure 264 on page 651):

1. Attach the ESD grounding strap to your bare wrist, and connect the strap to the ESD point on the chassis.

2. Taking care not to touch the connectors, remove the fan tray from its bag.

3. Using both hands, align the tray with the fan tray slot on the front panel of the chassis and slide it in until it is fully seated and the locking lever slides into place.

   CAUTION: Damage can occur if you attempt to install a fan tray into a chassis with a different airflow direction. Check the device model to ensure that you are installing a fan tray with the same airflow direction as the chassis. The fan trays are designed so that they can only be inserted into the QFX3500 device model that supports the same airflow type. See "Cooling System and Airflow for a QFX3500 Device" on page 124 for more information.

Copyright © 2018, Juniper Networks, Inc.

Figure 264: Installing a Fan Tray in a QFX3500 Device

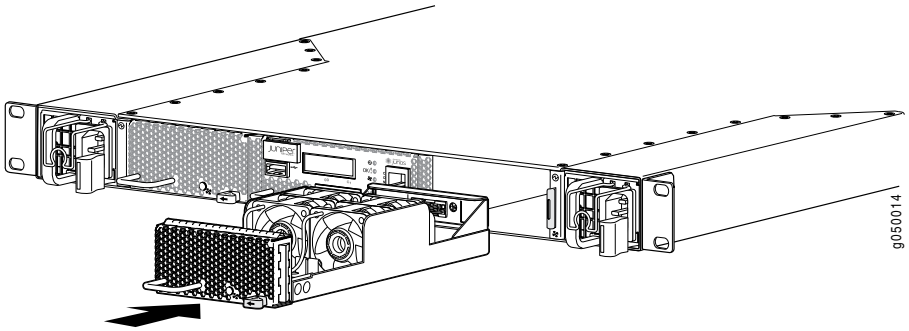

Related Documentation

- Removing a Fan Tray from a QFX3500 Device on page 651

Removing a Fan Tray from a QFX3500 Device

The fan trays in QFX3500 devices are hot-removable and hot-insertable field-replaceable units (FRUs): you can remove and replace them without powering off the device or disrupting device functions.

CAUTION: **Replace a failed fan tray with a new fan tray within 1 minute of removal to prevent chassis overheating. Before removing the fan tray, ensure you have a replacement fan tray.**

Before you remove a fan tray from a QFX3500 device, ensure that you have taken the necessary precautions to prevent electrostatic discharge (ESD) damage (see "Prevention of Electrostatic Discharge Damage" on page 360).

Ensure that you have the following parts and tools available to remove a fan tray from a QFX3500 device:

- ESD grounding strap
- Antistatic bag or an antistatic mat

To remove a fan tray from a QFX3500 device (see Figure 265 on page 652):

1. Place the antistatic bag or the antistatic mat on a flat, stable surface.
2. Attach the ESD grounding strap to your bare wrist, and connect the strap to the ESD point on the chassis.
3. Slide the locking lever toward the handle until it stops.

WARNING: To avoid injury, do not touch the fan with your hands or any tools as you slide the fan tray out of the chassis—the fan might still be running.

4. Grasp the handle on the fan tray and pull firmly to slide the fan tray halfway out of the chassis.

5. When the fans stop spinning, slide the fan tray completely out of the chassis.

6. Place the fan tray in the antistatic bag or on the antistatic mat placed on a flat, stable surface.

Figure 265: Removing a Fan Tray from a QFX3500 Device

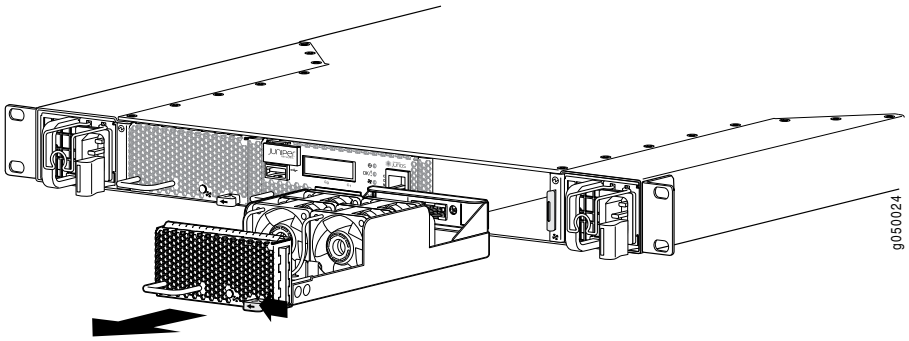

NOTE: When a fan tray is removed, the CLI message **Fan/Blower is Absent** is logged in the system log, and the system raises a minor alarm.

Related Documentation

- Cooling System and Airflow for a QFX3500 Device on page 124
- Field-Replaceable Units in a QFX3500 Device on page 119
- Front Panel of a QFX3500 Device on page 122
- Installing a Fan Tray in a QFX3500 Device on page 649

Installing a Management Board in a QFX3500 Device

A QFX3500 device has a single field-replaceable unit (FRU) management board.

CAUTION: You must power off the QFX3500 device before replacing the management board.

Copyright © 2018, Juniper Networks, Inc.

NOTE: The management board provides FRU-to-port or port-to-FRU airflow depending on the device model you purchase.

Before you install a management board in a QFX3500 device, ensure that you have taken the necessary precautions to prevent electrostatic discharge (ESD) damage (see "Prevention of Electrostatic Discharge Damage" on page 360).

Ensure that you have the following parts and tools available to install a management board in a QFX3500 device:

- ESD grounding strap

To install a management board in a QFX3500 device (see Figure 266 on page 653):

1. Ensure that the QFX3500 device is powered off (see *Powering Off a QFX3500 Device*). If the QFX3500 is operating as a Node device in a QFabric system, ensure that traffic is diverted in an orderly shutdown by using the shutdown procedure in "Adding or Replacing a Node Device in a QFabric Node Group" on page 578.

2. Attach the ESD grounding strap to your bare wrist and to a site ESD point.

3. Taking care not to touch the connectors, remove the management board from its bag.

4. Using both hands, align the tray with the management board slot on the front panel of the chassis and slide it in until it is fully seated and the locking lever slides into place.

CAUTION: Damage can occur if you attempt to install a management board into a chassis with a different airflow direction. Check the device model to ensure that you are installing a management board with the same airflow direction as the chassis. The management boards are designed so that they can only be inserted into the QFX3500 device model that supports the same airflow type. See "Cooling System and Airflow for a QFX3500 Device" on page 124 for more information.

Figure 266: Installing a Management Board in a QFX3500 Device

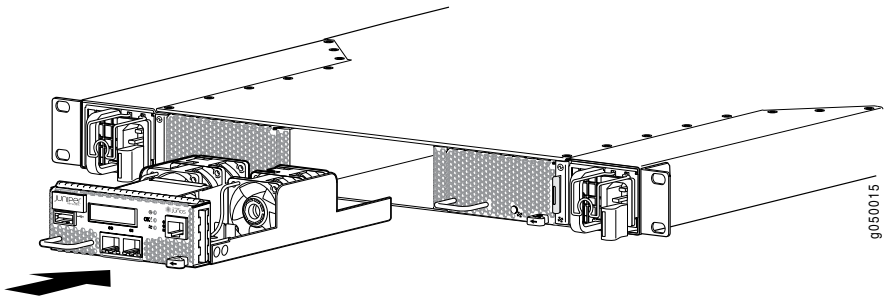

Related Documentation

- Management Board for a QFX3500 Device on page 128
- Field-Replaceable Units in a QFX3500 Device on page 119
- Connecting a QFX Series Device to a Management Console on page 386
- Connecting a QFX3500 Node Device to a Copper-Based QFX3000-G QFabric System Control Plane Network on page 515
- *Connecting a QFX3500 Device to a Network for Out-of-Band Management*
- Removing a Management Board from a QFX3500 Device on page 654

Removing a Management Board from a QFX3500 Device

QFX3500 devices have a single field-replaceable unit (FRU) management board on the front panel.

CAUTION: **You must power off the QFX3500 device before replacing the management board. If the QFX3500 is operating as a Node device in a QFabric system, ensure that traffic is diverted in an orderly shutdown by using the shutdown procedure in "Adding or Replacing a Node Device in a QFabric Node Group" on page 578.**

Before you remove a management board from a QFX3500 device, ensure that you have taken the necessary precautions to prevent electrostatic discharge (ESD) damage (see "Prevention of Electrostatic Discharge Damage" on page 360).

Ensure that you have the following parts and tools available to remove a management board from a QFX3500 device:

- ESD grounding strap
- Antistatic bag or an antistatic mat

To remove a management board from a QFX3500 device (see Figure 267 on page 655):

1. Place the antistatic bag or the antistatic mat on a flat, stable surface.
2. Ensure that the QFX3500 device is powered off. See *Powering Off a QFX3500 Device* or "Adding or Replacing a Node Device in a QFabric Node Group" on page 578 in QFabric systems.
3. Attach the ESD grounding strap to your bare wrist and to a site ESD point.
4. Slide the locking lever toward the handle until it stops.

Copyright © 2018, Juniper Networks, Inc.

WARNING: To avoid injury, do not touch the fan with your hands or any tools as you slide the management board out of the chassis—the fan might still be running.

5. Grasp the management board handle and pull firmly to slide the management board halfway out of the chassis.

6. When the fans stop spinning, slide the management board completely out of the chassis.

7. Place the management board in the antistatic bag or on the antistatic mat placed on a flat, stable surface.

Figure 267: Removing a Management Board from a QFX3500 Device

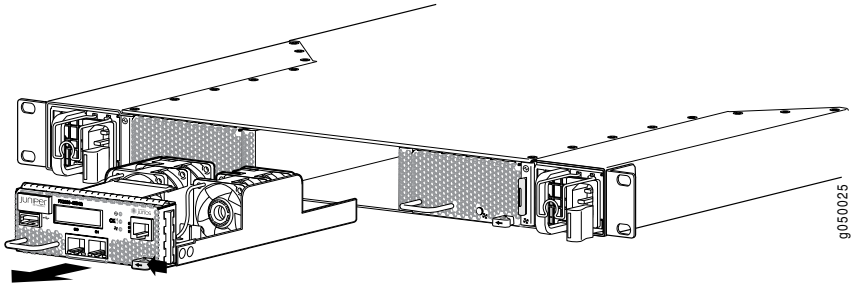

Related Documentation

- Management Board for a QFX3500 Device on page 128
- Field-Replaceable Units in a QFX3500 Device on page 119
- Front Panel of a QFX3500 Device on page 122
- *Connecting a Device to a Network for Out-of-Band Management*
- Connecting a QFX Series Device to a Management Console on page 386
- Installing a Management Board in a QFX3500 Device on page 652

Copyright © 2018, Juniper Networks, Inc.

CHAPTER 43

Replacing QFX3600 Components

- Installing and Removing QFX3600 or QFX3600-I Device Hardware Components on page 657
- Removing a Power Supply from a QFX3600 or QFX3600-I Device on page 658
- Installing a Power Supply in a QFX3600 or QFX3600-I Device on page 660
- Removing a Fan Tray from a QFX3600 or QFX3600-I Device on page 662
- Installing a Fan Tray in a QFX3600 or QFX3600-I Device on page 663

Installing and Removing QFX3600 or QFX3600-I Device Hardware Components

The QFX3600 or QFX3600-I device chassis is a rigid sheet-metal structure that houses the hardware components. The field-replaceable units (FRUs) in QFX3600 and QFX3600-I devices are:

- Power supplies
- Fan trays
- SFP transceivers on management ports labeled **C0S** and **C1S**
- QSFP+ transceivers on access and uplink ports labeled **Q0** through **Q15**

All of the QFX3600 and QFX3600-I device FRUs are hot-insertable and hot-removable: you can remove and replace them without powering off the device or disrupting device functions.

CAUTION: **Replace a failed power supply with a blank panel or new power supply within 1 minute of removal to prevent chassis overheating. Replace a failed fan tray with a new fan tray within 1 minute of removal to prevent chassis overheating.**

To install a power supply in a QFX3600 or QFX3600-I device, follow the instructions in "Installing a Power Supply in a QFX3600 or QFX3600-I Device" on page 660. To remove a power supply from a QFX3600 or QFX3600-I device, follow the instructions in "Removing a Power Supply from a QFX3600 or QFX3600-I Device" on page 658.

Copyright © 2018, Juniper Networks, Inc.

To install a fan tray in a QFX3600 or QFX3600-I device, follow the instructions in "Installing a Fan Tray in a QFX3600 or QFX3600-I Device" on page 663. To remove a fan tray from a QFX3600 or QFX3600-I device, follow the instructions in "Removing a Fan Tray from a QFX3600 or QFX3600-I Device" on page 662.

To install an SFP or QSFP+ transceiver in a QFX3600 or QFX3600-I device, follow the instructions in "Installing a Transceiver in a QFX Series Device" on page 709. To remove an SFP or QSFP+ transceiver from a QFX3600 or QFX3600-I device, follow the instructions in "Removing a Transceiver from a QFX Series Device" on page 707.

To connect a fiber-optic cable to an SFP or QSFP+ transceiver in a QFX3600 or QFX3600-I device, follow the instructions in "Connecting a Fiber-Optic Cable to a QFX Series Device" on page 712. To disconnect a fiber-optic cable from an SFP or QSFP+ transceiver from a QFX3600 or QFX3600-I device, follow the instructions in "Disconnecting a Fiber-Optic Cable from a QFX Series Device" on page 711.

Related Documentation

- AC Power Supply for a QFX3500, QFX3600, or QFX3600-I Device on page 110
- DC Power Supply for a QFX3500, QFX3600, or QFX3600-I Device on page 112
- Cooling System and Airflow for QFX3600 and QFX3600-I Devices on page 107
- Front Panel of a QFX3600 Device on page 104
- Rear Panel of QFX3600 and QFX3600-I Devices on page 106
- Determining Transceiver Support for QFabric Systems on page 258

Removing a Power Supply from a QFX3600 or QFX3600-I Device

The power supplies in QFX3600 and QFX3600-I devices are hot-removable and hot-insertable field-replaceable units (FRUs): you can remove and replace them without powering off the device or disrupting device functions.

Before you remove a power supply from a QFX3600 or QFX3600-I device, ensure that you have taken the necessary precautions to prevent electrostatic discharge (ESD) damage (see "Prevention of Electrostatic Discharge Damage" on page 360).

Ensure that you have the following parts and tools available to remove a power supply from a QFX3600 or QFX3600-I device:

- ESD grounding strap
- An antistatic bag or an antistatic mat

CAUTION: **Replace a failed power supply with a blank panel or new power supply within 1 minute of removal to prevent chassis overheating.**

To remove a power supply from a QFX3600 or QFX3600-I device (see Figure 268 on page 660):

 Copyright © 2018, Juniper Networks, Inc.

1. Place the antistatic bag or the antistatic mat on a flat, stable surface.

2. Attach the ESD grounding strap to your bare wrist, and connect the strap to the ESD point on the chassis.

   NOTE: **If only one power supply is installed in your QFX3600 or QFX3600-I device, you need to power off the switch before removing the power supply. See *Powering Off a QFX3600 Device*.**

3. Disconnect power to the power supply:

   - AC power supply—If the AC power source outlet has a power switch, set it to the OFF (O) position. If the AC power source outlet does not have a power switch, gently pull out the male end of the power cord connected to the power source outlet.
   - DC power supply—Switch the circuit breaker on the panel board that services the DC circuit to the OFF position.

4. Remove the power source cable from the power supply faceplate:

   - AC power supply—Remove the power cord from the power supply faceplate by detaching the power cord retainer and gently pulling out the female end of the power cord connected to the power supply faceplate.
   - DC power supply—Remove the screws securing the ring lugs attached to the power source cables to the power supply using the screwdriver, and remove the power source cables from the power supply. Replace the screws on the terminals and tighten them.

5. Slide the locking lever toward the handle until it stops.

6. Grasp the power supply handle and pull firmly to slide the power supply halfway out of the chassis.

7. Place one hand under the power supply to support it and slide it completely out of the chassis. Take care not to touch power supply components, pins, leads, or solder connections.

8. Place the power supply in the antistatic bag or on the antistatic mat placed on a flat, stable surface.

Copyright © 2018, Juniper Networks, Inc.

Figure 268: Removing a Power Supply from a QFX3600 or QFX3600-I Device

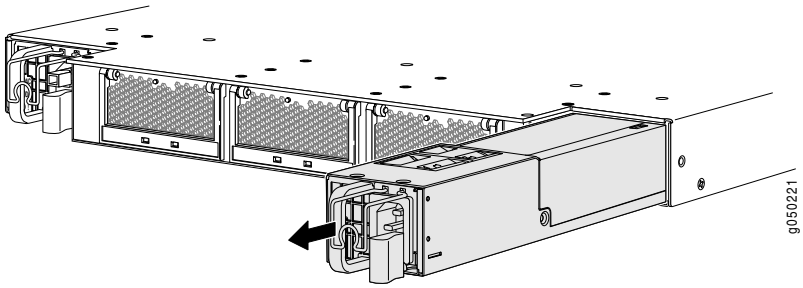

NOTE: If you have a Juniper Care service contract, register any addition, change, or upgrade of hardware components at https://www.juniper.net/customers/support/tools/updateinstallbase/ . Failure to do so can result in significant delays if you need replacement parts. This note does not apply if you replace existing components with the same type of component.

Related Documentation

- AC Power Supply for a QFX3500, QFX3600, or QFX3600-I Device on page 110
- DC Power Supply for a QFX3500, QFX3600, or QFX3600-I Device on page 112
- Field-Replaceable Units for QFX3600 and QFX3600-I Devices on page 102
- Rear Panel of QFX3600 and QFX3600-I Devices on page 106
- Connecting AC Power to a QFX3500, QFX3600, or QFX3600-I Device on page 463
- Connecting DC Power to a QFX3500, QFX3600, or QFX3600-I Device on page 466
- Installing a Power Supply in a QFX3600 or QFX3600-I Device on page 660

Installing a Power Supply in a QFX3600 or QFX3600-I Device

The QFX3600 and QFX3600-I devices are shipped from the factory with two 650 W power supplies pre-installed. Each power supply is a hot-removable and hot-insertable field-replaceable unit (FRU) when the second power supply is installed and running. You can install replacement power supplies on the rear panel without powering off the device or disrupting the switching function.

Before you install a power supply in a QFX3600 device, ensure that you have taken the necessary precautions to prevent electrostatic discharge (ESD) damage (see "Prevention of Electrostatic Discharge Damage" on page 360).

Ensure that you have the following parts and tools available to install a power supply in a QFX3600 device:

- ESD grounding strap

To install a power supply in a QFX3600 device (see Figure 269 on page 661):

Copyright © 2018, Juniper Networks, Inc.

1. Attach the ESD grounding strap to your bare wrist, and connect the strap to the ESD point on the chassis.

2. Taking care not to touch power supply components, pins, leads, or solder connections, remove the power supply from its bag.

3. Using both hands, place the power supply in the power supply slot on the rear panel of the device and slide it in until it is fully seated and the locking lever slides into place.

Figure 269: Installing a Power Supply in a QFX3600 or QFX3600-I Device

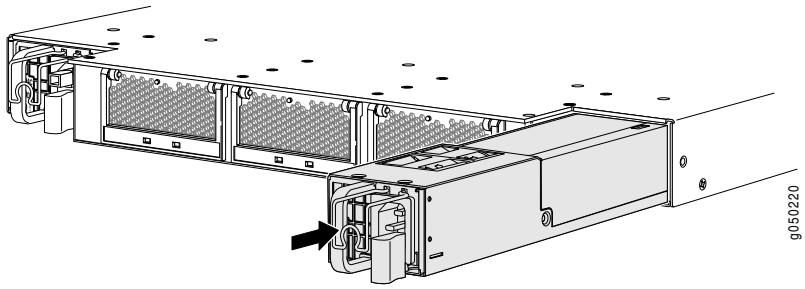

NOTE: Each power supply must be connected to a dedicated power source outlet.

NOTE: If you have a Juniper Care service contract, register any addition, change, or upgrade of hardware components at https://www.juniper.net/customers/support/tools/updateinstallbase/ . Failure to do so can result in significant delays if you need replacement parts. This note does not apply if you replace existing components with the same type of component.

Related Documentation

- AC Power Supply for a QFX3500, QFX3600, or QFX3600-I Device on page 110
- DC Power Supply for a QFX3500, QFX3600, or QFX3600-I Device on page 112
- Field-Replaceable Units for QFX3600 and QFX3600-I Devices on page 102
- Rear Panel of QFX3600 and QFX3600-I Devices on page 106
- AC Power Cord Specifications for a QFX Series Device on page 292
- Connecting AC Power to a QFX3500, QFX3600, or QFX3600-I Device on page 463
- Connecting DC Power to a QFX3500, QFX3600, or QFX3600-I Device on page 466
- Removing a Power Supply from a QFX3600 or QFX3600-I Device on page 658

Copyright © 2018, Juniper Networks, Inc.

Removing a Fan Tray from a QFX3600 or QFX3600-I Device

The fan trays in QFX3600 and QFX3600-I devices are hot-removable and hot-insertable field-replaceable units (FRUs): you can remove and replace them without powering off the device or disrupting device functions.

Before you remove a fan tray from a QFX3600 or QFX3600-I device, ensure that you have taken the necessary precautions to prevent electrostatic discharge (ESD) damage (see "Prevention of Electrostatic Discharge Damage" on page 360).

Ensure that you have the following parts and tools available to remove a fan tray from a QFX3600 or QFX3600-I device:

- ESD grounding strap
- An antistatic bag or an antistatic mat

CAUTION: **Replace a failed fan tray with a new fan tray within 1 minute of removal to prevent chassis overheating.**

To remove a fan tray from a QFX3600 or QFX3600-I device (see Figure 270 on page 663):

1. Place the antistatic bag or the antistatic mat on a flat, stable surface.
2. Attach the ESD grounding strap to your bare wrist, and connect the strap to the ESD point on the chassis.

   WARNING: **To avoid injury, do not touch the fan with your hands or any tools as you slide the fan tray out of the chassis—the fan may still be running.**

3. Grasp the handle on the fan tray and pull firmly to slide the fan tray halfway out of the chassis.
4. When the fans stop spinning, slide the fan tray completely out of the chassis.
5. Place the fan tray in the antistatic bag or on the antistatic mat placed on a flat, stable surface.

Copyright © 2018, Juniper Networks, Inc.

Figure 270: Removing a Fan Tray from a QFX3600 or QFX3600-I Device

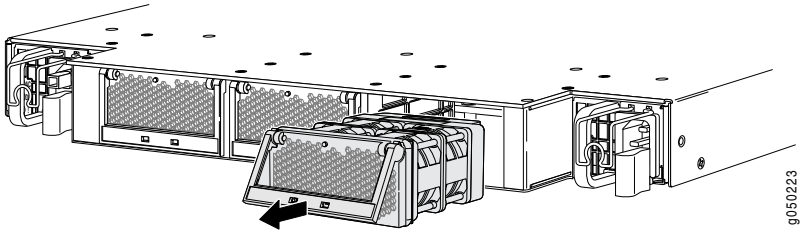

NOTE: When a fan tray is removed, the CLI message **Fan/Blower is Absent** is logged in the system log, and the system raises a minor alarm.

Related Documentation

- Cooling System and Airflow for QFX3600 and QFX3600-I Devices on page 107
- Field-Replaceable Units for QFX3600 and QFX3600-I Devices on page 102
- Rear Panel of QFX3600 and QFX3600-I Devices on page 106
- Installing a Fan Tray in a QFX3600 or QFX3600-I Device on page 663

Installing a Fan Tray in a QFX3600 or QFX3600-I Device

The fan trays in QFX3600 and QFX3600-I devices are hot-removable and hot-insertable field-replaceable units (FRUs): you can remove and replace them without powering off the device or disrupting device functions.

Before you install a fan tray in a QFX3600 or QFX3600-I device, ensure that you have taken the necessary precautions to prevent electrostatic discharge (ESD) damage (see "Prevention of Electrostatic Discharge Damage" on page 360).

Ensure that you have the following parts and tools available to install a fan tray in a QFX3600 or QFX3600-I device:

- ESD grounding strap

To install a fan tray in a QFX3600 or QFX3600-I device (see Figure 271 on page 664):

1. Attach the ESD grounding strap to your bare wrist, and connect the strap to the ESD point on the chassis.
2. Taking care not to touch the connectors, remove the fan tray from its bag.
3. Using both hands, align the tray with the fan tray slot on the rear panel of the chassis and slide it in until it is fully seated.

Figure 271: Installing a Fan Tray in a QFX3600 or QFX3600-I Device

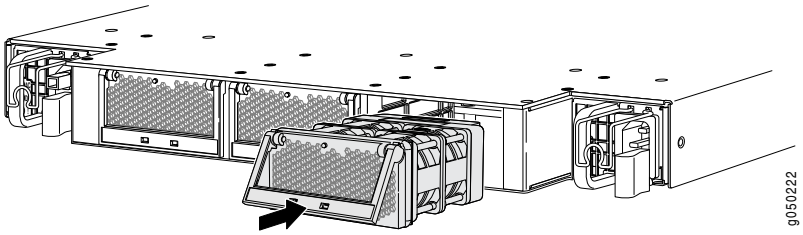

Related Documentation

- Cooling System and Airflow for QFX3600 and QFX3600-I Devices on page 107
- Field-Replaceable Units for QFX3600 and QFX3600-I Devices on page 102
- Rear Panel of QFX3600 and QFX3600-I Devices on page 106
- Removing a Fan Tray from a QFX3600 or QFX3600-I Device on page 662

Copyright © 2018, Juniper Networks, Inc.

CHAPTER 44

Replacing QFX5100 Components

- Installing and Removing QFX5100 Device Hardware Components on page 665
- Removing a Power Supply from a QFX5100 Device on page 666
- Installing a Power Supply in a QFX5100 Device on page 668
- Removing an Expansion Module from a QFX5100 Device on page 670
- Installing an Expansion Module in a QFX5100 Device on page 672
- Removing a Fan Module from a QFX5100 Device on page 675
- Installing a Fan Module in a QFX5100 Device on page 677

Installing and Removing QFX5100 Device Hardware Components

The QFX5100 switch chassis is a rigid sheet-metal structure that houses the hardware components. The field-replaceable units (FRUs) in QFX5100 devices are:

- Power supply
- Fan module
- Expansion module (QFX5100-24Q and QFX5100-24Q-AA only)
- SFP+ transceiver
- QSFP+ transceiver

All of the QFX5100 device FRUs are hot-insertable and hot-removable: you can remove and replace them without powering off the switch or disrupting switch functions.

CAUTION: **Replace a failed power supply with a new power supply within 1 minute of removal to prevent chassis overheating. Replace a failed fan module with a new fan within 1 minute of removal to prevent chassis overheating.**

To install a power supply in a QFX5100 device, follow the instructions in "Installing a Power Supply in a QFX5100 Device" on page 668. To remove a power supply from a QFX5100 device, follow the instructions in "Removing a Power Supply from a QFX5100 Device" on page 666.

To install a fan module in a QFX5100 device, follow the instructions in "Installing a Fan Module in a QFX5100 Device" on page 677. To remove a fan module from a QFX5100 device, follow the instructions in "Removing a Fan Module from a QFX5100 Device" on page 675.

To install an SFP+ or QSFP+ transceiver in a QFX5100 device, follow the instructions in "Installing a Transceiver in a QFX Series Device" on page 709. To remove an SFP+ or QSFP+ transceiver from a QFX5100 device, follow the instructions in "Removing a Transceiver from a QFX Series Device" on page 707.

To connect a fiber-optic cable to an SFP+ or QSFP+ transceiver in a QFX5100 device, follow the instructions in "Connecting a Fiber-Optic Cable to a QFX Series Device" on page 712. To disconnect a fiber-optic cable from an SFP+ or QSFP+ transceiver from a QFX5100 device, follow the instructions in "Disconnecting a Fiber-Optic Cable from a QFX Series Device" on page 711.

Related Documentation

- AC Power Supply for a QFX5100 Device on page 94
- Cooling System and Airflow in a QFX5100 Device on page 88
- Management Panel of a QFX5100 Device on page 85
- *Determining Interface Support for the QFX5100 Device*

Removing a Power Supply from a QFX5100 Device

The QFX5100 is shipped from the factory with two power supplies. Each power supply is a hot-removable and hot-insertable field-replaceable unit (FRU) when the second power supply is installed and running. You can install replacement power supplies in the two slots next to the fan modules without powering off the switch or disrupting the switching function.

Before you remove a power supply from a QFX5100 device, ensure that you have taken the necessary precautions to prevent electrostatic discharge (ESD) damage (see "Prevention of Electrostatic Discharge Damage" on page 360).

Ensure that you have the following parts and tools available to remove a power supply from a QFX5100 device:

- ESD grounding strap
- Antistatic bag or an antistatic mat
- Phillips (+) screwdriver, number 2 (DC power supply)

CAUTION: **Replace the power supply with a new power supply within 1 minute of removal to prevent chassis overheating.**

To remove a power supply from a QFX5100 device (see Figure 272 on page 668 and Figure 273 on page 668):

Copyright © 2018, Juniper Networks, Inc.

1. Place the antistatic bag or the antistatic mat on a flat, stable surface.

2. Attach the ESD grounding strap to your bare wrist, and connect the strap to the ESD point on the chassis.

   NOTE: **If only one power supply is installed in your QFX5100 device, you need to power off the switch before removing the power supply. See** *Powering Off a QFX5100 Device*.

3. Disconnect power to the switch:

   - AC power supply—If the AC power source outlet has a power switch, set it to the OFF (O) position. If the AC power source outlet does not have a power switch, gently pull out the male end of the power cord connected to the power source outlet.
   - DC power supply—Switch the circuit breaker on the panel board that services the DC circuit to the OFF position.

4. Remove the power source cable from the power supply faceplate:

   - AC power supply—Remove the power cord from the power supply faceplate by detaching the power cord retainer and gently pulling out the female end of the power cord connected to the power supply faceplate.
   - DC power supply—Remove the screws securing the ring lugs attached to the power source cables to the power supply using the screwdriver, and remove the power source cables from the power supply. Replace the screws on the terminals and tighten them.

5. Slide the locking lever toward the handle until it stops.

6. Grasp the power supply handle and pull firmly to slide the power supply halfway out of the chassis.

7. Place one hand under the power supply to support it and slide it completely out of the chassis. Take care not to touch power supply components, pins, leads, or solder connections.

8. Place the power supply in the antistatic bag or on the antistatic mat placed on a flat, stable surface.

Copyright © 2018, Juniper Networks, Inc.

Figure 272: Removing a Power Supply from a 1 U QFX5100 Device

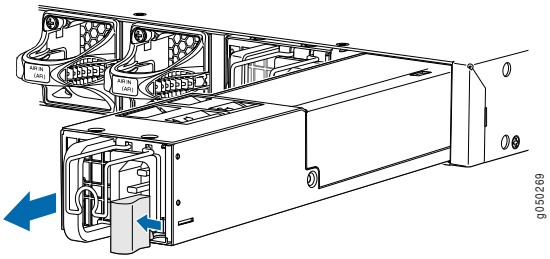

Figure 273: Removing a Power Supply from a QFX5100-96S Device

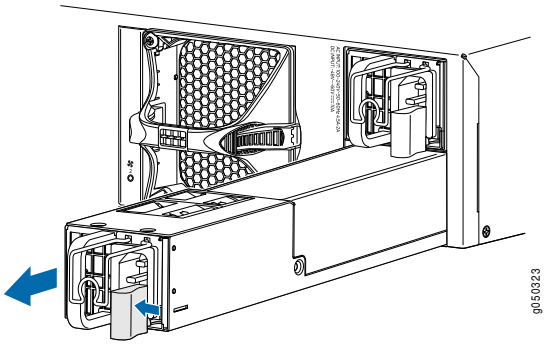

Related Documentation

- AC Power Supply for a QFX5100 Device on page 94
- Connecting AC Power to a QFX5100 Device on page 443
- Connecting DC Power to a QFX5100 Device on page 446
- Installing a Power Supply in a QFX5100 Device on page 668

Installing a Power Supply in a QFX5100 Device

The QFX5100 is shipped from the factory with two power supplies. Each power supply is a hot-removable and hot-insertable field-replaceable unit (FRU) when the second power supply is installed and running. You can install replacement power supplies in the two slots next to the fan modules without powering off the switch or disrupting the switching function.

- Before you install a power supply in a QFX5100 device, ensure that you have taken the necessary precautions to prevent electrostatic discharge (ESD) damage (see "Prevention of Electrostatic Discharge Damage" on page 360).
- Ensure that the airflow direction of the power supply is the same as the chassis. Labels on the power supply handle indicate the direction of airflow. See "Cooling System and Airflow in a QFX5100 Device" on page 88 for more information.

To install a power supply in a QFX5100 device (see Figure 274 on page 669 and Figure 275 on page 669):

 Copyright © 2018, Juniper Networks, Inc.

1. Attach the ESD grounding strap to your bare wrist, and connect the strap to the ESD point on the chassis.

2. Taking care not to touch power supply components, pins, leads, or solder connections, remove the power supply from its bag.

   CAUTION: Verify that the direction of the arrow on the power supply handle matches the direction of airflow in the chassis. Ensure that each power supply you install in the chassis has the same airflow direction. If you install power supplies with two different airflow directions, Junos OS raises an alarm, and the status (ALM) LED blinks amber.

3. Using both hands, place the power supply in the power supply slot on the FRU panel of the switch and slide it in until it is fully seated and the locking lever slides into place.

Figure 274: Installing a Power Supply in a 1 U QFX5100 Device

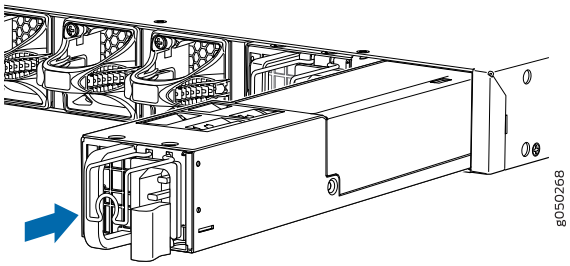

Figure 275: Installing a Power Supply in a QFX5100-96S Device

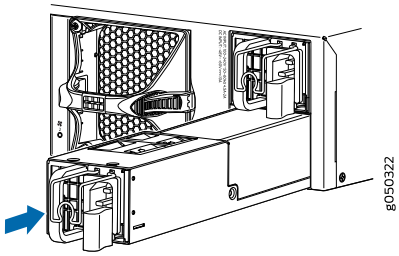

NOTE: Each power supply must be connected to a dedicated power source outlet.

NOTE: If you have a Juniper Care service contract, register any addition, change, or upgrade of hardware components at https://www.juniper.net/customers/support/tools/updateinstallbase/ . Failure to do so can result in significant delays if you need replacement parts. This note does not apply if you replace existing components with the same type of component.

Related Documentation

- AC Power Supply for a QFX5100 Device on page 94
- Field-Replaceable Units in a QFX5100 Device on page 75
- Port Panel of QFX5100-48S and QFX5100-48SH Devices on page 77
- Management Panel of a QFX5100 Device on page 85
- AC Power Cord Specifications for a QFX Series Device on page 292
- Connecting AC Power to a QFX5100 Device on page 443
- Connecting DC Power to a QFX5100 Device on page 446
- Removing a Power Supply from a QFX5100 Device on page 666

Removing an Expansion Module from a QFX5100 Device

The expansion modules used in QFX5100-24Q and QFX5100-24Q-AA devices are hot-removable and hot-insertable field-replaceable units (FRUs): You can remove and replace them without powering off the switch or disrupting switch functions.

NOTE: You must take the QFX5100-24Q-AA switch offline, before replacing the QFX-PFA-4Q expansion module.

Before you begin removing an expansion module from the switch:

- Ensure that you have taken the necessary precautions to prevent electrostatic discharge (ESD) damage (see "Prevention of Electrostatic Discharge Damage" on page 360).
- If there are any transceivers installed in the expansion module, remove them before you remove the expansion module. For instructions on removing transceivers, see "Removing a Transceiver from a QFX Series Device" on page 707.

Ensure that you have the following parts and tools available:

- ESD grounding strap
- Phillips screwdriver, number 2
- A replacement optional module or cover panel
- An antistatic bag or antistatic mat

Copyright © 2018, Juniper Networks, Inc.

CAUTION: **We recommend that you install either a replacement optional module or a cover panel in the empty module slot to avoid chassis overheating and dust accumulation.**

To remove an expansion module from the switch (see Figure 276 on page 671 and Figure 277 on page 672):

1. Attach the ESD grounding strap to your bare wrist, and connect the strap to the ESD point on the chassis.

2. Unscrew both captive screws on the faceplate of the expansion module by using your fingers. If you are unable to unscrew the captive screws by using your fingers, use the screwdriver.

3. Hold the handle and gently pull the expansion module toward you and out of the module slot. For a QFX5100-24Q-AA switch, unscrew the captive screws of the ejector handles and pull the expansion module toward you and out of the module slot (see Figure 277 on page 672).

4. Place the expansion module in an antistatic bag or on an antistatic mat placed on a flat, stable surface.

5. If you are not replacing the expansion module with an optional module, install the cover panel over the slot.

NOTE: **After you have removed an expansion module, wait for at least 5 seconds before you install an expansion module. If you do not wait for at least 5 seconds, the interfaces on the expansion module might not come up.**

Figure 276 on page 671 shows removing a QFX-EM-4Q expansion module from the port panel of a QFX5100-24Q device.

Figure 276: Removing a QFX-EM-4Q Expansion Module from a QFX5100-24Q Device

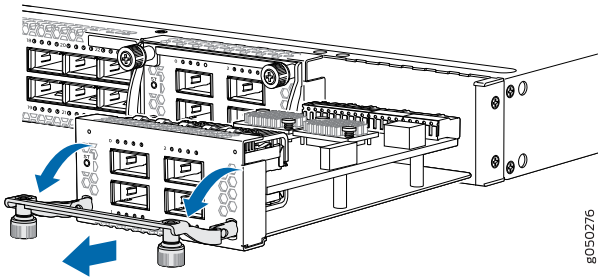

Figure 277 on page 672 shows removing a QFX-PFA-4Q expansion module from the port panel of a QFX5100-24Q-AA switch.

NOTE: You must take the QFX-PFA-4Q offline before replacing it.

Figure 277: Removing a QFX-PFA-4Q Expansion Module from a QFX5100-24Q-AA Device

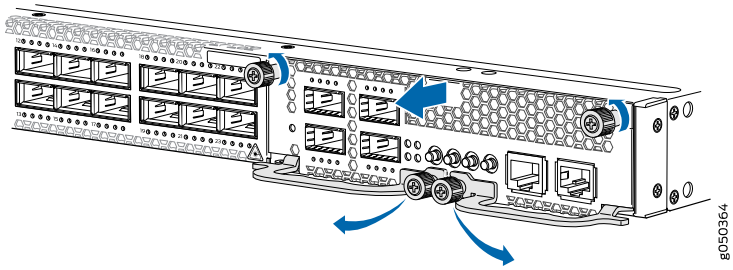

Related Documentation

- Installing an Expansion Module in a QFX5100 Device on page 672
- Installing and Removing QFX5100 Device Hardware Components on page 665
- Field-Replaceable Units in a QFX5100 Device on page 75
- QFX5100 Device Hardware Overview on page 63

Installing an Expansion Module in a QFX5100 Device

The QFX5100-24Q device allows up to two expansion modules to be added to the port panel to increase port density. The QFX5100-24Q device holds two bays of expansion modules that can be mixed and matched as desired. The supported modules are:

- QFX-EM-4Q—Each module adds four Quad Enhanced Small Form-Factor Pluggable (QSFP+) ports. See Figure 278 on page 672.

Figure 278: QFX-EM-4Q Expansion Module

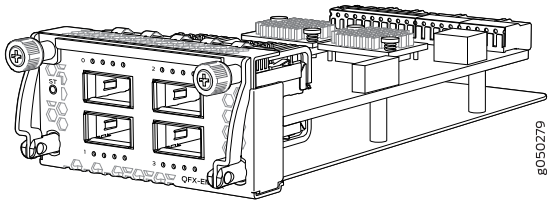

- EX4600-EM-8F—Each module adds eight 10 Gigabit SFP+ ports. See Figure 279 on page 673.

Copyright © 2018, Juniper Networks, Inc.

Figure 279: EX4600-EM-8F Expansion Module

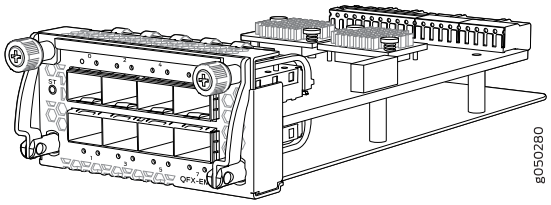

The QFX5100-24Q device is configured for the QFX-EM-4Q by default, but any combination of the two modules is supported. Expansion modules can be hot-inserted or hot-removed. However, when an EX4600-EM-8F is inserted instead of the default QFX-EM-4Q, the new configuration causes the PFE to reboot and all of the interfaces to go down temporarily, causing a short disruption in traffic.

The QFX5100-24Q-AA switch supports the double-wide QFX-PFA-4Q expansion module, in addition to the QFX-EM-4Q (see Figure 278 on page 672) and the EX4600-EM-8F (see Figure 279 on page 673). The QFX-PFA-4Q module adds four 40-Gigabit Ethernet QSFP+ ports (see Figure 280 on page 673).

Figure 280: QFX-PFA-4Q Expansion Module

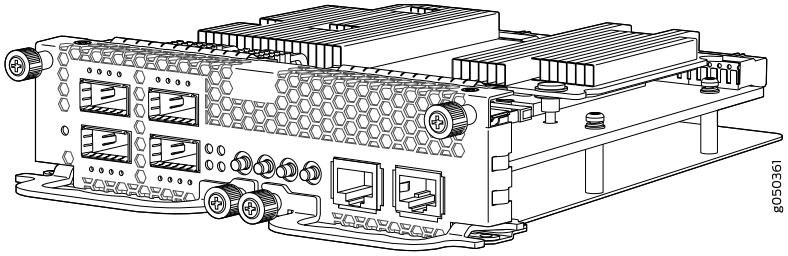

NOTE: When an expansion module is installed in the switch or an existing expansion module is replaced with another expansion module, the switch detects the ports on the expansion module. The switch creates the required interfaces when transceivers are installed in these ports.

Before you begin installing an expansion module in the switch, ensure that you have taken the necessary precautions to prevent electrostatic discharge (ESD) damage (see "Prevention of Electrostatic Discharge Damage" on page 360).

Ensure that you have the following parts and tools available:

- ESD grounding strap. If a grounding strap is not available, follow the alternative grounding method described in Step 1 of the following procedure.
- Phillips (+) screwdriver, number 2

To install an expansion module in a QFX5100-24Q or a QFX5100-24Q-AA device (see Figure 281 on page 674 and Figure 282 on page 675):

1. Attach the ESD grounding strap to your bare wrist, and connect the strap to the ESD point on the chassis.

   If a grounding strap is not available, hold the expansion module in its antistatic bag in one hand and touch the exposed metallic part of the switch with the other hand to ground yourself and the component.

2. If the module slot has a cover panel on it, remove the cover panel by using the screwdriver and save it for later use.

3. Taking care not to touch module components, pins, leads, or solder connections, remove the expansion module from its bag.

4. Loosen the captive screws on the front faceplate of the expansion module by using your fingers. If you are unable to loosen the captive screws by using your fingers, use the screwdriver.

5. Using both hands, place the expansion module in the empty slot and slide it in gently until it is fully seated.

   NOTE: **After you have removed an expansion module, wait for at least 5 seconds before you install an expansion module. If you do not wait for at least 5 seconds, the interfaces on the expansion module might not come up.**

6. Raise the handle and tighten the captive screws by using your fingers or the screwdriver. For the QFX5100-24Q-AA, retract the ejector handles and tighten the captive screws by using your fingers or the screwdriver (see Figure 282 on page 675). When the **ST** LED turns green, the expansion module is ready for use.

Figure 281 on page 674 shows how to install a QSFP+ expansion module on the port panel of a QFX5100-24Q device.

Figure 281: Installing a QFX-EM-4Q Expansion Module in a QFX5100-24Q Device

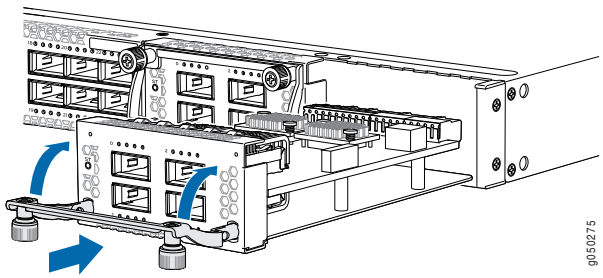

Copyright © 2018, Juniper Networks, Inc.

Figure 282 on page 675 shows how to install a QFX-PFA-4Q on the port panel of a QFX5100-24Q-AA switch.

Figure 282: Installing a QFX-PFA-4Q Expansion Module in a QFX5100-24Q-AA Device

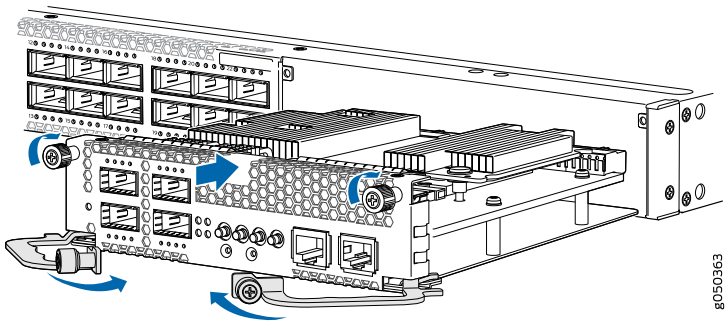

NOTE: When you install the QFX-PFA-4Q expansion module in a QFX5100-24Q-AA switch and reboot the switch, the two NIC ports in the NIC inside the QFX5100-24Q-AA switch are enabled automatically. When you install other expansion modules (QFX-EM-4Q or EX4600-EM-8F), the NIC ports are enabled only when an EX4600-EM-8F is installed in slot 2 (QIC1), that is, the expansion module slot located on your right as you face the QFX5100-24Q-AA. To verify that the NIC ports are enabled, run the **show interfaces terse** command. For a QFX-PFA-4Q, the NIC interface names are displayed in the command output as, **xe-0/0/40** and **xe-0/0/41**. For an EX4600-EM-8F installed in slot 2 (QIC1), the NIC interfaces are displayed as **xe-0/0/24** and **xe-0/0/25**.

NOTE: If you have a Juniper Care service contract, register any addition, change, or upgrade of hardware components at https://www.juniper.net/customers/support/tools/updateinstallbase/ . Failure to do so can result in significant delays if you need replacement parts. This note applies if you change the type of power supply or add a new type of expansion module. It does not apply if you replace these components with the same type of component.

Related Documentation

- QFX5100 Device Hardware Overview on page 63
- Installing and Removing QFX5100 Device Hardware Components on page 665

Removing a Fan Module from a QFX5100 Device

The fan modules in QFX5100 devices are hot-removable and hot-insertable field-replaceable units (FRUs): you can remove and replace them without powering off the switch or disrupting switch functions.

CAUTION: **Replace a failed fan module with a new fan module within 1 minute of removal to prevent chassis overheating. Before removing the fan module, ensure you have a replacement fan module at hand.**

Before you remove a fan module from a QFX5100 device, ensure that you have taken the necessary precautions to prevent electrostatic discharge (ESD) damage (see "Prevention of Electrostatic Discharge Damage" on page 360).

Ensure that you have the following parts and tools available to remove a fan module from a QFX5100 device:

- ESD grounding strap
- Antistatic bag or an antistatic mat

To remove a fan module from a QFX5100 device (see Figure 283 on page 677 and Figure 284 on page 677):

1. Place the antistatic bag or the antistatic mat on a flat, stable surface.
2. Attach the ESD grounding strap to your bare wrist, and connect the strap to the ESD point on the chassis.
3. Using a Phillips screwdriver, loosen the locking screw (3 or 4 turns).
4. Grasp the handle on the fan module and squeeze the outside of the handle to release the module.

   WARNING: **To avoid injury, do not touch the fan with your hands or any tools as you slide the fan module out of the chassis—the fan might still be running.**

5. Pull firmly to slide the fan module halfway out of the chassis.
6. When the fan stop spinning, slide the fan module completely out of the chassis.
7. Place the fan module in the antistatic bag or on the antistatic mat placed on a flat, stable surface.

Copyright © 2018, Juniper Networks, Inc.

Figure 283: Removing a Fan Module from a 1 U QFX5100 Device

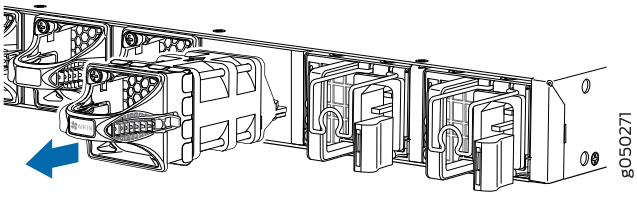

Figure 284: Removing a Fan Module from a 2 U QFX5100-96S Device

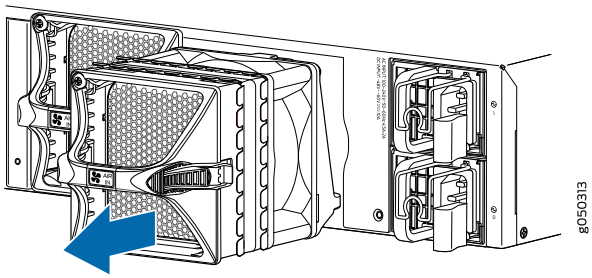

NOTE: When a fan module is removed, the CLI message **Fan/Blower is Absent** is logged in the system log, and the system raises a minor alarm.

Related Documentation

- Cooling System and Airflow in a QFX5100 Device on page 88
- Field-Replaceable Units in a QFX5100 Device on page 75
- Management Panel of a QFX5100 Device on page 85
- Installing a Fan Module in a QFX5100 Device on page 677

Installing a Fan Module in a QFX5100 Device

The fan modules in a QFX5100 device are hot-removable and hot-insertable field-replaceable units (FRUs): you can remove and replace them without powering off the switch or disrupting switch functions.

CAUTION: Replace a failed fan module with a new fan module within 1 minute of removal to prevent chassis overheating. Before removing the fan module, ensure you have a replacement fan module at hand.

NOTE: The fan module provides FRU-to-port or port-to-FRU airflow depending on the switch product SKU you purchase. In legacy switches, or switches with an LCD, this airflow is called front to back and back to front.

Before you install a fan module in a QFX5100 device, ensure that you have taken the necessary precautions to prevent electrostatic discharge (ESD) damage (see "Prevention of Electrostatic Discharge Damage" on page 360).

To install a fan module in a QFX5100 device (see Figure 285 on page 678 and Figure 286 on page 678):

1. Attach the ESD grounding strap to your bare wrist, and connect the strap to the ESD point on the chassis.

2. Taking care not to touch the connectors, remove the fan module from its bag.

3. Align the module with the open slot on the management panel of the chassis and slide it in until it is fully seated.

   CAUTION: Damage can occur if you attempt to install a fan module into a chassis with a different airflow direction. Compare the switch product SKU with the airflow marking on the handle to ensure that you are installing a fan module with the same airflow direction as the chassis. The fan modules are designed so that they can only be inserted into the QFX5100 product SKU that supports the same airflow type. See "Cooling System and Airflow in a QFX5100 Device" on page 88 for more information.

4. Using a Phillips screwdriver, turn the locking screw until it is tight.

Figure 285: Installing a Fan Module in a 1 U QFX5100 Device

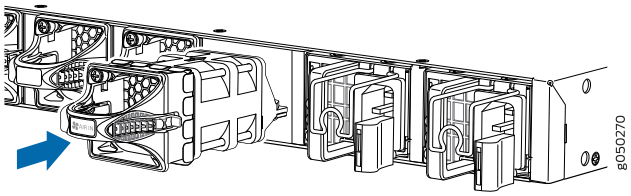

Figure 286: Installing a Fan Module in a 2 U QFX5100-96S Device

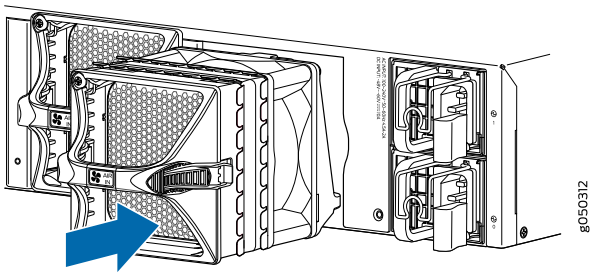

Related Documentation

- Removing a Fan Module from a QFX5100 Device on page 675
- Cooling System and Airflow in a QFX5100 Device on page 88

Copyright © 2018, Juniper Networks, Inc.

- Field-Replaceable Units in a QFX5100 Device on page 75
- Management Panel of a QFX5100 Device on page 85

Copyright © 2018, Juniper Networks, Inc.

CHAPTER 45

Replacing EX4300 Components

- Removing an AC Power Supply from an EX4300 Switch on page 681
- Installing an AC Power Supply in an EX4300 Switch on page 683
- Removing an Uplink Module from an EX4300 Switch on page 685
- Installing an Uplink Module in an EX4300 Switch on page 687
- Removing a Fan Module from an EX4300 Switch on page 690
- Installing a Fan Module in an EX4300 Switch on page 691

Removing an AC Power Supply from an EX4300 Switch

The power supplies in EX4300 switches are hot-removable and hot-insertable field-replaceable units (FRUs) installed in the rear panel of the switch: You can remove and replace them without powering off the switch or disrupting switch functions.

Before you remove a power supply from an EX4300 switch, ensure that you have taken the necessary precautions to prevent electrostatic discharge (ESD) damage (see "Prevention of Electrostatic Discharge Damage" on page 360).

Ensure that you have the following parts and tools available to remove a power supply from an EX4300 switch:

- ESD grounding strap
- Phillips (+) screwdriver, number 2 (not provided)
- Antistatic bag or an antistatic mat
- Replacement power supply or a cover panel for the power supply slot

CAUTION: **We recommend that you install either a replacement power supply or a cover panel in the empty power supply slot to prevent chassis overheating and dust accumulation.**

NOTE: The power supply slots are at the right end of the rear panel on 24-port and 48-port switches, and at the left end on 32-port switches. Figure 287 on page 683 shows how to remove an AC power supply from 24-port or 48-port switches except EX4300-48MP and EX4300-48MP-S switches. The procedure is the same for 32-port switches. Figure 288 on page 683 shows how to remove an AC power supply from EX4300-48MP and EX4300-48MP-S switches.

1. Place the antistatic bag or the antistatic mat on a flat, stable surface.

2. Wrap and fasten one end of an ESD wrist strap around your bare wrist, and connect the other end of the strap to the ESD point on the switch.

   NOTE: If only one power supply is installed in your EX4300 switch, you need to power off the switch before removing the power supply.

3. If the AC power source outlet has a power switch, set it to the OFF (**O**) position.

4. Gently pull out the male end of the power cord connected to the power source outlet.

5. Remove the power cord from the power supply faceplate by detaching the power cord retainer and gently pulling out the female end of the power cord connected to the power supply faceplate.

6. Slide the ejector lever toward the left until the power supply is unseated.

7. Grasp the power supply handle and pull firmly to slide the power supply halfway out of the chassis.

8. Place one hand under the power supply to support it and slide it completely out of the chassis. Take care not to touch power supply components, pins, leads, or solder connections.

9. Place the power supply in the antistatic bag or on the antistatic mat placed on a flat, stable surface.

10. If you are not replacing the power supply, install the cover panel over the slot.

Copyright © 2018, Juniper Networks, Inc.

Figure 287: Removing an AC Power Supply from EX4300 Switches Except EX4300-48MP and EX4300-48MP-S Switches

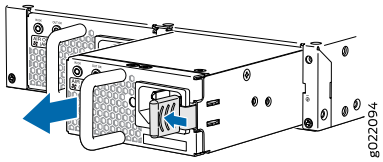

Figure 288: Removing an AC Power Supply from EX4300-48MP and EX4300-48MP-S Switches

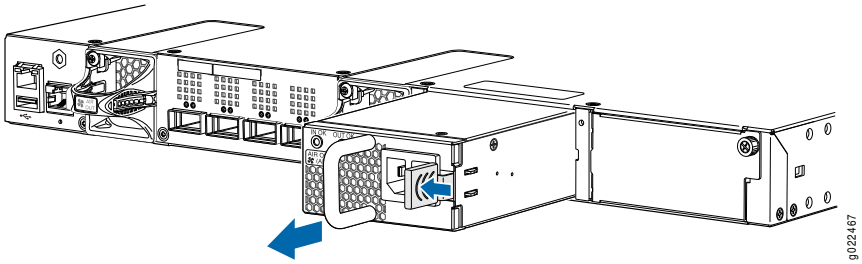

Installing an AC Power Supply in an EX4300 Switch

The AC power supply in EX4300 switches is a hot-removable and hot-insertable field-replaceable unit (FRU) installed in the rear panel of the switch: You can remove and replace it without powering off the switch or disrupting switch functions.

CAUTION: Do not mix:

- AC and DC power supplies in the same chassis
- Power supplies with different airflow labels (AIR IN (AFI) and AIR OUT (AFO)) in the same chassis.
- Fan modules with different airflow labels (AIR IN (AFI) and AIR OUT (AFO)) in the same chassis.
- Power supplies and fan modules with different airflow labels (AIR IN (AFI) and AIR OUT (AFO)) in the same chassis.

Before you install an AC power supply in the switch:

- Ensure you understand how to prevent electrostatic discharge (ESD) damage. See "Prevention of Electrostatic Discharge Damage" on page 360.

Ensure that you have the following parts and tools available to install the power supply:

- ESD grounding strap
- Phillips (+) screwdriver, number 2

NOTE: Each power supply must be connected to a dedicated power source outlet.

The power supply slots are at the right end of the rear panel on 24-port and 48-port switches, and at the left end on 32-port switches. Figure 289 on page 684 shows how to install an AC power supply in 24-port or 48-port switches except EX4300-48MP and EX4300-48MP-S switches. The procedure is the same for 32-port switches. Figure 290 on page 685 shows how to install an AC power supply in EX4300-48MP and EX4300-48MP-S switches.

To install an AC power supply in the switch:

1. Ensure that you have the correct power supply. The label **AIR IN (AFI)** or **AIR OUT (AFO)** on the power supply must match the label **AIR IN (AFI)** or **AIR OUT (AFO)** on the installed fan module.

2. Wrap and fasten one end of an ESD wrist strap around your bare wrist, and connect the other end of the strap to the ESD point on the switch.

3. If the power supply slot has a cover panel on it, loosen the captive screws on the cover panel by using your fingers or the screwdriver. Hold the captive screw and gently pull it outward to remove the cover panel. Save the cover panel for later use.

4. Taking care not to touch power supply pins, leads, or solder connections, remove the power supply from the bag.

5. Using both hands, place the power supply in the power supply slot on the rear panel of the switch and slide it in until it is fully seated and the ejector lever fits into place.

Figure 289: Installing an AC Power Supply in EX4300 Switches Except EX4300-48MP and EX4300-48MP-S Switches

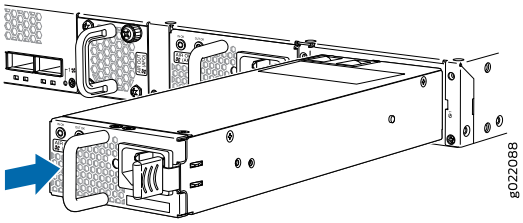

Copyright © 2018, Juniper Networks, Inc.

Figure 290: Installing an AC Power Supply in EX4300-48MP and EX4300-48MP-S Switches

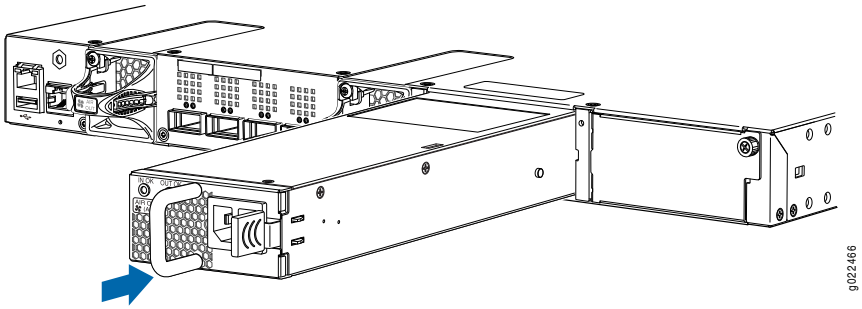

NOTE: If you have a Juniper J-Care service contract, register any addition, change, or upgrade of hardware components at https://www.juniper.net/customers/support/tools/updateinstallbase/ . Failure to do so can result in significant delays if you need replacement parts. This note does not apply if you replace existing components with the same type of component.

Related Documentation

- AC Power Supply in EX4300 Switches on page 162

Removing an Uplink Module from an EX4300 Switch

The uplink module in EX4300 switches is hot-removable and hot-insertable field-replaceable unit (FRU): You can remove and replace it without powering off the switch or disrupting switch functions.

Before you begin removing an uplink module from the switch:

- Ensure that you have taken the necessary precautions to prevent electrostatic discharge (ESD) damage (see "Prevention of Electrostatic Discharge Damage" on page 360).
- If there are any transceivers installed in the uplink module, remove them before you remove the uplink module. For instructions on removing transceivers, see *Removing a Transceiver*.

Ensure that you have the following parts and tools available:

- ESD grounding strap
- Phillips (+) screwdriver, number 2
- A replacement uplink module or cover panel
- An antistatic bag or antistatic mat

Copyright © 2018, Juniper Networks, Inc.

CAUTION: We recommend that you install either a replacement uplink module or a cover panel in the empty module slot to prevent chassis overheating and dust accumulation.

To remove an uplink module from the switch (see Figure 291 on page 687, Figure 292 on page 687, and Figure 293 on page 687):

1. Take the uplink module offline by issuing the following CLI command:

   `user@switch>` **request chassis pic offline fpc-slot *slot-number* pic-slot *slot-number***

2. Wrap and fasten one end of an ESD wrist strap around your bare wrist, and connect the other end of the strap to the ESD point on the switch.

3. Loosen both captive screws on the faceplate of the uplink module by using your fingers. If you are unable to unscrew the captive screws by using your fingers, use the screwdriver.

   CAUTION: Do not pull the uplink module out of the module slot by holding the faceplate of the uplink module.

4. a. 48-port EX4300 switches except EX4300-48MP and EX4300-48MP-S switches—Hold both the ejector handles or the captive screws on the uplink module and gently pull the uplink module toward you and out of the module slot.

   b. EX4300-48MP and EX4300-48MP-S switches—Hold the ejector handle on the uplink module and gently pull the uplink module toward you and out of the module slot.

5. Place the uplink module in an antistatic bag or on an antistatic mat placed on a flat, stable surface.

6. If you are not replacing the uplink module, install the cover panel over the slot.

   NOTE: After you have removed an uplink module, wait for at least 5 seconds before you install an uplink module. If you do not wait for at least 5 seconds, the interfaces on the uplink module might not come up.

Copyright © 2018, Juniper Networks, Inc.

Figure 291: Removing a 4-Port SFP+ Uplink Module from a 24-Port or 48-Port EX4300 Switch Except EX4300-48MP and EX4300-48MP-S Switches

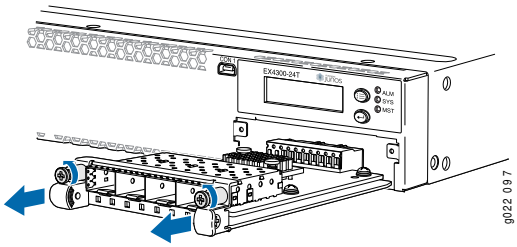

NOTE: The procedure is the same for EX4300-48MP and EX4300-48MP-S switches.

Figure 292: Removing a 2-Port QSFP+ Uplink Module from a 32-Port EX4300 Switch

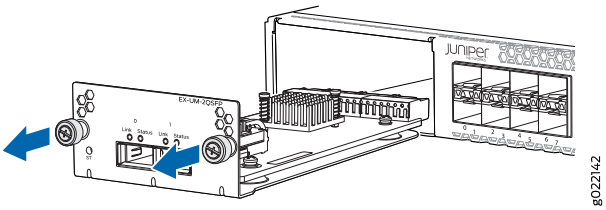

Figure 293: Removing an 8-Port SFP+ Uplink Module from a 32-Port EX4300 Switch

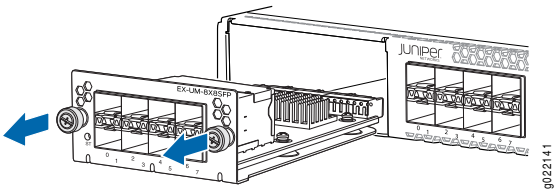

Installing an Uplink Module in an EX4300 Switch

You can install an uplink module in the front panel of an EX4300 switch. The uplink module in EX4300 switches is a hot-removable and hot-insertable unit (FRU): You can remove and replace it without powering off the switch.

NOTE: If you have set an uplink module port as a Virtual Chassis port (VCP), removing the uplink module breaks the setting. You must reset the port as a VCP after you replace the module. See *Setting an Uplink Port on an EX Series or QFX Series Switch as a Virtual Chassis Port*.

Before you begin installing an uplink module in the switch:

- Ensure that you have taken the necessary precautions to prevent ESD damage (see "Prevention of Electrostatic Discharge Damage" on page 360).

Ensure that you have the following parts and tools available:

- Electrostatic discharge (ESD) grounding strap (If a grounding strap is not available, follow the alternative grounding method described in Step 1 of the following procedure.)
- Phillips (+) screwdriver, number 2

To install an uplink module in the switch (see Figure 294 on page 689, Figure 295 on page 689, and Figure 296 on page 689):

1. Wrap and fasten one end of an ESD wrist strap around your bare wrist, and connect the other end of the strap to the ESD point on the switch.

   If a grounding strap is not available, hold the uplink module in its antistatic bag in one hand and touch the exposed, bare metal of the switch with the other hand to ground yourself and the component.

2. If the uplink module slot has a cover panel on it, loosen both captive screws on the faceplate of the uplink module by using your fingers. If you are unable to unscrew the captive screws by using your fingers, use the screwdriver. Hold both the captive screws and gently pull it outward to remove the cover panel, and save it for later use.

   NOTE: **If you are removing an uplink module and installing another uplink module, wait for at least 10 seconds after removing the uplink module before installing the new or the same uplink module. If you do not wait for at least 10 seconds, the interfaces on the uplink module might not come up.**

3. Taking care not to touch module components, pins, leads, or solder connections, remove the uplink module from its bag.

   CAUTION: **Before you slide the uplink module into the slot on the switch chassis, ensure the uplink module is aligned correctly. Misalignment might cause the pins to bend, making the uplink module unusable.**

4. Using both hands, place the module in the empty slot and slide it in gently until it is fully seated.

5. Tighten both the captive screws by using your fingers or the screwdriver.

Copyright © 2018, Juniper Networks, Inc.

Figure 294: Installing a 4-Port SFP+ Uplink Module in a 24-Port or 48-Port EX4300 Switch Except EX4300-48MP and EX4300-48MP-S Switches

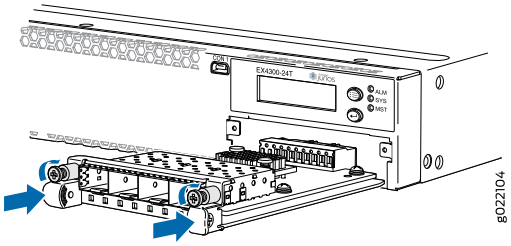

NOTE: The procedure is the same for EX4300-48MP and EX4300-48MP-S switches.

Figure 295: Installing a 2-Port QSFP+ Uplink Module in a 32-Port EX4300 Switch

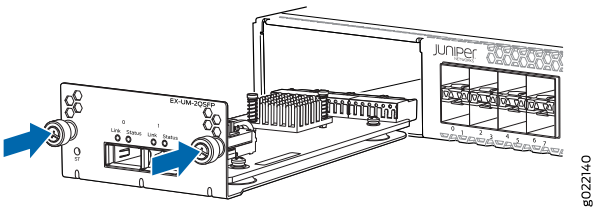

Figure 296: Installing an 8-Port SFP+ Uplink Module in a 32-Port EX4300 Switch

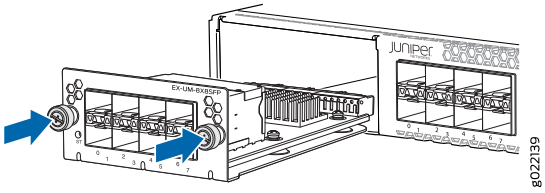

NOTE: If you have a Juniper J-Care service contract, register any addition, change, or upgrade of hardware components at https://www.juniper.net/customers/support/tools/updateinstallbase/ . Failure to do so can result in significant delays if you need replacement parts. This note does not apply if you replace existing components with the same type of component.

Related Documentation

- *Configuring Gigabit Ethernet Interfaces (CLI Procedure)*

Removing a Fan Module from an EX4300 Switch

The fan module in EX4300 switches is a hot-removable and hot-insertable field-replaceable unit (FRU) installed in the rear panel of the switch: You can remove and replace it without powering off the switch or disrupting switch functions.

Ensure that you have the following parts and tools available:

- Phillips (+) screwdriver, number 2
- An antistatic bag or an antistatic mat
- A replacement fan module

NOTE: **The fan module slots are at the left side of the rear panel on 24-port and 48-port switches, and at the right side on 32-port switches.** Figure 297 on page 691 **shows how to remove a fan module from 24- port or 48-port switches except EX4300-48MP and EX4300-48MP-S switches. The procedure is the same for 32-port switches.** Figure 298 on page 691 **shows how to remove a fan module from EX4300-48MP and EX4300-48MP-S switches.**

1. Place the antistatic bag or the antistatic mat on a flat, stable surface.

2. Loosen the captive screws on the front faceplate of the fan module by using your fingers. If you are unable to loosen the captive screws by using your fingers, use the screwdriver.

   WARNING: **To prevent injury, do not touch the fan with your hands or any tools as you slide the fan module out of the chassis—the fan might still be running.**

3. Grasp the handle on the fan module and pull it firmly to slide the fan module out of the chassis.

4. Place the fan module in the antistatic bag or on the antistatic mat placed on a flat, stable surface.

5. Install the replacement fan.

6. Tighten the captive screws on the faceplate of the fan module by using your fingers. If you are unable to tighten the captive screws by using your fingers, use the screwdriver.

Copyright © 2018, Juniper Networks, Inc.

Figure 297: Removing a Fan Module from EX4300 Switches Except EX4300-48MP and EX4300-48MP-S Switches

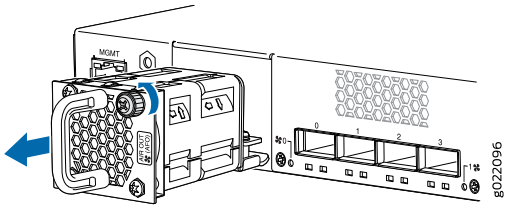

Figure 298: Removing a Fan Module from EX4300-48MP and EX4300-48MP-S Switches

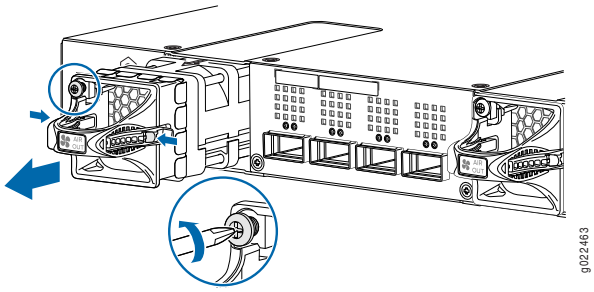

NOTE: Both the fan modules must be installed and operational for optimal functioning of the switch.

Related Documentation

- Cooling System and Airflow in an EX4300 Switch on page 156

Installing a Fan Module in an EX4300 Switch

Each fan module is a hot-removable and hot-insertable field-replaceable unit (FRU) installed in the rear panel of the switch: You can remove and replace it without powering off the switch or disrupting switch functions.

CAUTION: Do not mix:

- Fan modules with different airflow labels (AIR IN (AFI) and AIR OUT (AFO)) in the same chassis.
- Power supplies with different airflow labels (AIR IN (AFI) and AIR OUT (AFO)) in the same chassis.
- Power supplies and fan modules with different airflow labels (AIR IN (AFI) and AIR OUT (AFO)) in the same chassis.
- AC and DC power supplies in the same chassis.

Before you install a fan module in the switch:

- Ensure you understand how to prevent electrostatic discharge (ESD) damage. See "Prevention of Electrostatic Discharge Damage" on page 360.

Ensure that you have the following parts and tools available to install a fan module in the switch chassis:

- ESD grounding strap
- Phillips (+) screwdriver, number 2

NOTE: The fan module slots are at the left side of the rear panel on 24-port and 48-port switches, and at the right side on 32-port switches. Figure 299 on page 692 shows how to install a fan module in 24- port or 48-port switches except EX4300-48MP and EX4300-48MP-S switches. The procedure is the same for 32-port switches. Figure 300 on page 693 shows how to install a fan module in EX4300-48MP and EX4300-48MP-S switches.

1. Ensure that you have the correct fan module. The label **AIR IN (AFI)** or **AIR OUT (AFO)** on the fan module must match the label **AIR IN (AFI)** or **AIR OUT (AFO)** on the installed power supply.

2. Wrap and fasten one end of an ESD wrist strap around your bare wrist, and connect the other end of the strap to the ESD point on the switch.

3. Remove the fan module from its bag.

4. Hold the handle of the fan module with one hand and support the weight of the module with the other hand. Place the fan module in the fan module slot on the rear panel of the switch and slide it in until it is fully seated.

5. Tighten the captive screws on the faceplate of the fan module by using your fingers. If you are unable to tighten the captive screws by using your fingers, use the screwdriver.

Figure 299: Installing a Fan Module in EX4300 Switches Except EX4300-48MP and EX4300-48MP-S Switches

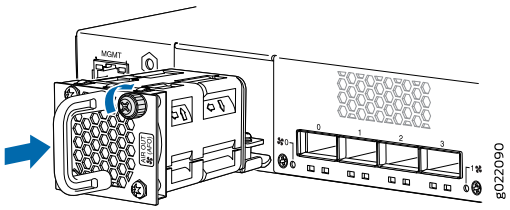

 Copyright © 2018, Juniper Networks, Inc.

Figure 300: Installing a Fan Module in EX4300-48MP and EX4300-48MP-S Switches

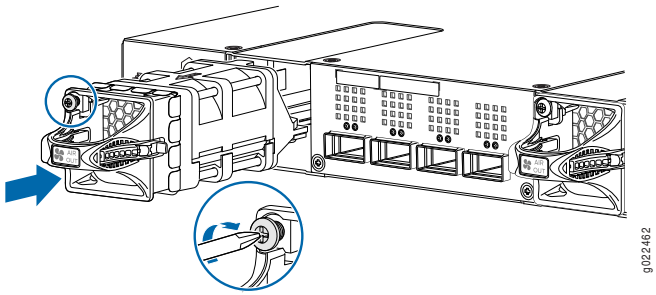

NOTE: If you have a Juniper J-Care service contract, register any addition, change, or upgrade of hardware components at https://www.juniper.net/customers/support/tools/updateinstallbase/ . Failure to do so can result in significant delays if you need replacement parts. This note does not apply if you replace existing components with the same type of component.

Related Documentation

- Cooling System and Airflow in an EX4300 Switch on page 156

Copyright © 2018, Juniper Networks, Inc.

CHAPTER 46

Replacing EX4200 Components

- Removing a Power Supply from an EX4200 Switch on page 695
- Installing a Power Supply in an EX4200 Switch on page 697
- Removing an Uplink Module from an EX4200 Switch on page 699
- Installing an Uplink Module in an EX4200 Switch on page 701
- Removing a Fan Tray from an EX4200 Switch on page 703
- Installing a Fan Tray in an EX4200 Switch on page 705

Removing a Power Supply from an EX4200 Switch

The power supply in an EX4200 switch is a hot-removable and hot-insertable field-replaceable unit (FRU) located on the rear panel of the switch: You can remove and replace it without powering off the switch or disrupting switch functions.

Ensure that you have the following parts and tools available:

- Phillips (+) screwdriver, number 2
- An antistatic bag or an antistatic mat

CAUTION: **Do not leave the power supply slot empty for a long time while the switch is on. The power supply must remain in the chassis for proper airflow.**

To remove a power supply from the switch (see Figure 301 on page 696):

1. Place the antistatic bag or the antistatic mat on a flat, stable surface.

2. Disconnect power to the switch by performing one of the following:
   - AC power supply—If the AC power source outlet has a power switch, set it to the OFF (0) position. If the AC power source outlet does not have a power switch, gently pull out the male end of the power cord connected to the power source outlet.
   - DC power supply—Switch the circuit breaker on the panel board that services the DC circuit to the OFF position.

Copyright © 2018, Juniper Networks, Inc.

3. Remove the power source cable from the power supply faceplate:
   - AC power supply—Gently pull out the female end of the power cord connected to the power supply faceplate.
   - DC power supply—Remove the screws securing the ring lugs attached to the power source cables to the power supply using the screwdriver, and remove the power source cables from the power supply. Replace the screws on the terminals and tighten them.
4. Loosen the locking lever screw on the left front of the power supply by using the screwdriver.
5. Push down on the locking lever until it is in its lowest position.
6. Grasp the power supply handle and pull firmly to slide it halfway out of the chassis.
7. Place one hand under the power supply to support it and slide it completely out of the chassis. Take care not to touch power supply components, pins, leads, or solder connections.
8. Place the power supply in the antistatic bag or on the antistatic mat placed on a flat, stable surface.

Figure 301: Removing a Power Supply from the Switch

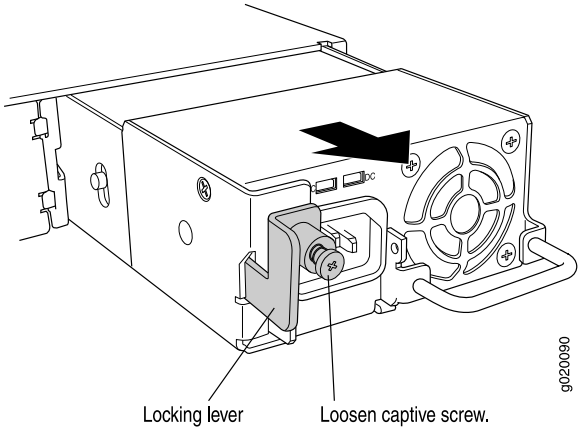

Related Documentation

- Installing a Power Supply in an EX4200 Switch on page 697
- *Installing and Removing EX4200 Switch Hardware Components*
- Power Supply in EX4200 Switches on page 188
- Field-Replaceable Units in EX4200 Switches on page 185
- AC Power Cord Specifications for EX4200 Switches on page 312
- *Rear Panel of an EX4200 Switch*

Copyright © 2018, Juniper Networks, Inc.

Installing a Power Supply in an EX4200 Switch

The power supply in EX4200 switches is a hot-removable and hot-insertable field-replaceable unit (FRU): You can remove and replace it without powering off the switch or disrupting switch functions.

All the EX4200 AC powered or DC powered switches, except the EX4200-24F-S and EX4200-48T-S switches are shipped with one AC or DC power supply pre-installed in the rear panel of the switches. EX4200-24F-S and EX4200-48T-S switches are not shipped with pre-installed power supplies; you must order them separately.

Ensure that you have the following parts and tools available:

- A Phillips (+) screwdriver, number 2

To install a power supply in the switch (see Figure 302 on page 698):

1. Taking care not to touch power supply components, pins, leads, or solder connections, remove the power supply from its bag.

2. Loosen the locking lever screw on the left front of the power supply by using the screwdriver.

3. Push down on the locking lever until it is in its lowest position.

4. Using both hands, place the power supply in the power supply slot on the rear panel of the switch and slide it in until it is fully seated.

   NOTE: **The handle on the 320 W AC power supply is at the bottom of the power supply faceplate, while the handle on the 600 W and the 930 W AC power supplies is at the top of the faceplate. The handle on the 190 W DC power supply runs across the faceplate.**

5. Push the locking lever up to its highest position (this action might pull the power supply in).

6. Tighten the locking lever screw by using the screwdriver.

Figure 302: Installing a Power Supply in an EX4200 Switch

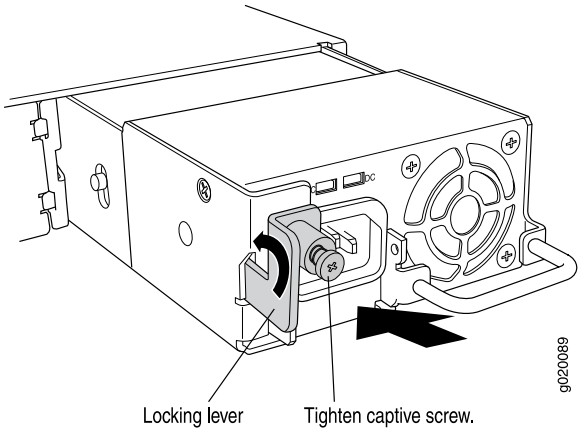

NOTE: Each power supply must be connected to a dedicated power source outlet.

NOTE: EX4200-24PX and EX4200-48PX switches do not support the 930 W (EX-PWR-930-AC) or the 600 W (EX-PWR-600-AC) AC power supplies that are used in the EX4200-48P and the EX4200-24P switch models. EX4200-24PX and EX4200-48PX switches work only with the power supply labeled EX-PWR2-930-AC. You can find the label on the top of the power supply (see "Removing a Power Supply from an EX4200 Switch" on page 695). The EX-PWR2-930-AC power supply is supported across the EX4200 product line.

NOTE: If you have a Juniper J-Care service contract, register any addition, change, or upgrade of hardware components at https://www.juniper.net/customers/support/tools/updateinstallbase/ . Failure to do so can result in significant delays if you need replacement parts. This note does not apply if you replace existing components with the same type of component.

Related Documentation

- Removing a Power Supply from an EX4200 Switch on page 695
- *Installing and Removing EX4200 Switch Hardware Components*
- Power Supply in EX4200 Switches on page 188
- Field-Replaceable Units in EX4200 Switches on page 185
- AC Power Cord Specifications for EX4200 Switches on page 312
- *Rear Panel of an EX4200 Switch*
- *Troubleshooting Power Supply Installation Alarms on EX4200 Switches*

Copyright © 2018, Juniper Networks, Inc.

Removing an Uplink Module from an EX4200 Switch

If your EX4200 switch includes an optional uplink module, it is installed in the switch's front panel. The different types of uplink modules are described in *Uplink Modules in EX4200 Switches*.

The uplink module in EX4200 switches is a hot-removable and hot-insertable unit (FRU): You can remove and replace it without powering off the switch.

NOTE: The packet forwarding process (pfem) restarts and causes traffic loss, if you:

- Install an uplink module (SFP, SFP+, or XFP)
- Replace an existing uplink module with another uplink module
- Change the operating mode of an SFP+ or SFP+ MACsec uplink module (10-gigabit to 1-gigabit or 1-gigabit to 10-gigabit) installed in the switch

NOTE: If you have set an uplink module port as a Virtual Chassis port (VCP), removing the uplink module breaks the setting. You must reset the port as a VCP after you replace the module. See *Setting an Uplink Port on an EX Series or QFX Series Switch as a Virtual Chassis Port*.

Before you begin removing an uplink module from the switch:

- Ensure that you have taken the necessary precautions to prevent ESD damage (see "Prevention of Electrostatic Discharge Damage" on page 360).
- If there are any transceivers installed in the uplink module, remove them before you remove the uplink module. For instructions on removing transceivers, see *Removing a Transceiver*.

Ensure that you have the following parts and tools available:

- Electrostatic discharge (ESD) grounding strap (If a grounding strap is not available, follow the alternative grounding method described in Step 1 of the following procedure.)
- Cross-head screwdriver (provided in the uplink module kit)
- An antistatic bag or antistatic mat

Copyright © 2018, Juniper Networks, Inc.

To remove an uplink module from the switch:

1. Attach the electrostatic discharge (ESD) grounding strap to your bare wrist, and connect the strap to the ESD point on the chassis.

   If a grounding strap is not available, touch the exposed, bare metal of the switch with the other hand to ground yourself and the component.

2. Loosen the screws that secure the flip-up door covering the uplink module slot on the front panel of the switch by using the cross-head screwdriver provided with the uplink module kit and flip the door upward.

3. Insert the ball end of the screwdriver in the keyhole on the front panel of the uplink module and slide the screwdriver to the narrow part of the keyhole (see Figure 303 on page 700).

   CAUTION: **Ensure the screwdriver does not slip out of the keyhole when you pull the uplink module out of the switch chassis.**

4. Using both hands, gently pull the screwdriver to slide the uplink module halfway out of the chassis (see Figure 304 on page 701).

5. Place one hand under the uplink module to support it and slide it completely out of the chassis.

6. Slide the screwdriver out of the keyhole.

7. Place the uplink module in an antistatic bag or on an antistatic mat placed on a flat, stable surface.

Figure 303: Sliding the Screwdriver to the Narrow Part of the Keyhole

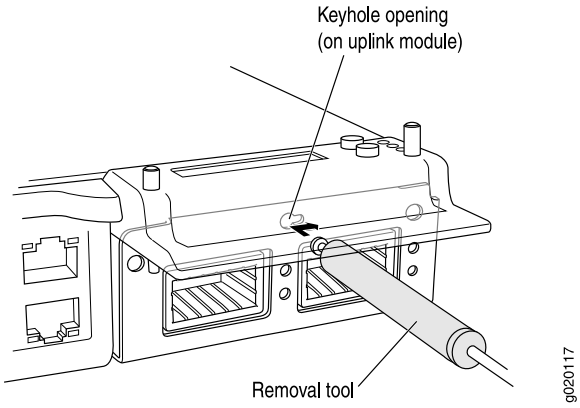

Copyright © 2018, Juniper Networks, Inc.

Figure 304: Removing an Uplink Module from an EX4200 Switch

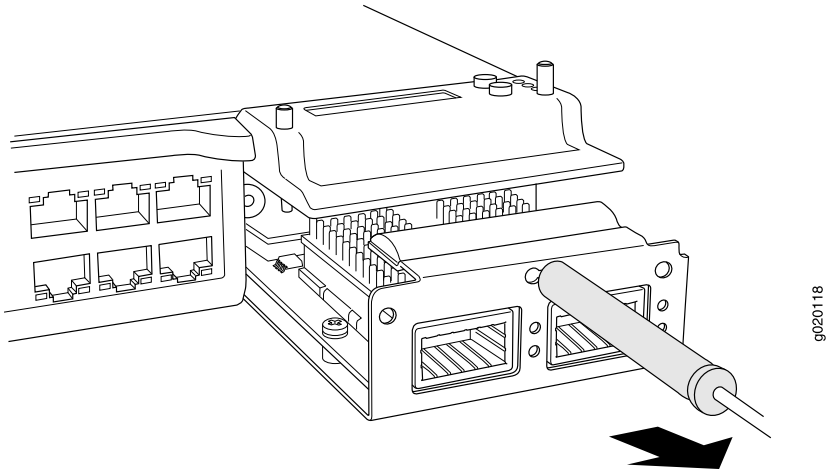

Related Documentation

- Installing an Uplink Module in an EX4200 Switch on page 701
- *Installing and Removing EX4200 Switch Hardware Components*
- Field-Replaceable Units in EX4200 Switches on page 185
- *Front Panel of an EX4200 Switch*

Installing an Uplink Module in an EX4200 Switch

If your EX4200 switch includes an optional uplink module, you install it in the switch's front panel. The different types of uplink modules are described in *Uplink Modules Connector Pinout Information for EX4200 Switches*.

The uplink module in EX4200 switches is a hot-removable and hot-insertable unit (FRU): You can remove and replace it without powering off the switch.

NOTE: The packet forwarding process (pfem) restarts and causes traffic loss, if you:

- Install an uplink module (SFP, SFP+, SFP+ MACsec, or XFP)
- Replace an existing uplink module with another uplink module
- Change the operating mode of an SFP+ or SFP+ MACsec uplink module (10-gigabit to 1-gigabit or 1-gigabit to 10-gigabit) installed in the switch

NOTE: If you have set an uplink module port as a Virtual Chassis port (VCP), removing the uplink module breaks the setting. You must reset the port as a VCP after you replace the module. See *Setting an Uplink Port on an EX Series or QFX Series Switch as a Virtual Chassis Port*.

Before you begin installing an uplink module in the switch:

- Ensure that you have taken the necessary precautions to prevent ESD damage (see "Prevention of Electrostatic Discharge Damage" on page 360).

Ensure that you have the following parts and tools available:

- Electrostatic discharge (ESD) grounding strap (If a grounding strap is not available, follow the alternative grounding method described in Step 1 of the following procedure.)
- Cross-head screwdriver (provided in the uplink module kit)

To install an uplink module in the switch (see Figure 305 on page 703):

1. Attach the electrostatic discharge (ESD) grounding strap to your bare wrist, and connect the strap to the ESD point on the chassis.

   If a grounding strap is not available, hold the uplink module in its antistatic bag in one hand and touch the exposed, bare metal of the switch with the other hand to ground yourself and the component.

2. Loosen the screws that secure the flip-up door covering the empty uplink module slot on the front panel of the switch by using the cross-head screwdriver, flip the door upward, and remove the blanking panel covering the empty uplink module slot.

   NOTE: **If you are removing an uplink module and installing another uplink module, wait for at least 10 seconds after removing the uplink module before installing the new or the same uplink module. If you do not wait for at least 10 seconds, the interfaces on the uplink module might not come up.**

3. Taking care not to touch module components, pins, leads, or solder connections, remove the uplink module from its bag.

   CAUTION: **Before you slide the uplink module into the slot on the switch chassis, ensure the uplink module is aligned correctly. Misalignment might cause the pins to bend, making the uplink module unusable.**

4. Using both hands, place the module in the empty slot and slide it in gently until it is fully seated.

5. Flip the door down and tighten the screws by using the cross-head screwdriver.

NOTE: **If the switch does not detect the uplink module, see *Troubleshooting Virtual Chassis Port Connectivity on an EX4200 Switch*.**

Copyright © 2018, Juniper Networks, Inc.

Figure 305: Installing an Uplink Module in an EX4200 Switch

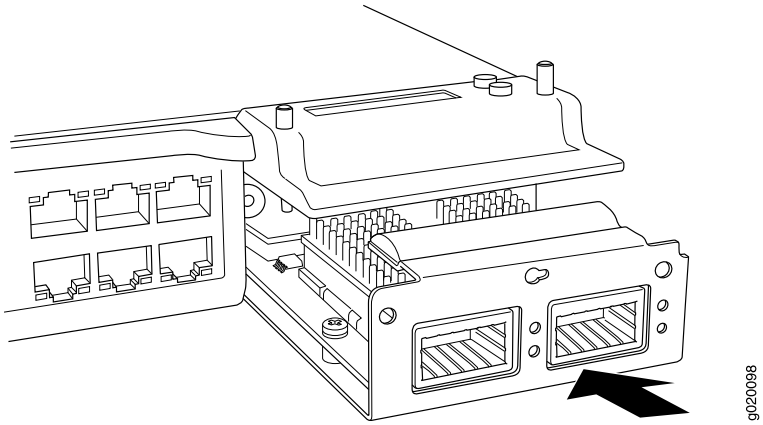

NOTE: If you have a Juniper J-Care service contract, register any addition, change, or upgrade of hardware components at https://www.juniper.net/customers/support/tools/updateinstallbase/ . Failure to do so can result in significant delays if you need replacement parts. This note does not apply if you replace existing components with the same type of component.

Related Documentation

- *Troubleshooting Virtual Chassis Port Connectivity on an EX4200 Switch*
- Removing an Uplink Module from an EX4200 Switch on page 699
- *Installing a Transceiver*
- *Installing and Removing EX4200 Switch Hardware Components*
- *Configuring Gigabit Ethernet Interfaces (CLI Procedure)*
- *Front Panel of an EX4200 Switch*

Removing a Fan Tray from an EX4200 Switch

The fan tray in an EX4200 switch is a hot-removable and hot-insertable field-replaceable unit (FRU) located on the rear panel of the switch: You can remove and replace it without powering off the switch or disrupting switch functions.

Ensure that you have the following parts and tools available:

- Phillips (+) screwdriver, number 2
- An antistatic bag or an antistatic mat

To remove a fan tray from the switch:

1. Place the antistatic bag or the antistatic mat on a flat, stable surface.

2. Loosen the screw or screws securing the fan tray by using the screwdriver.

   WARNING: **To avoid injury, do not touch the fan with your hands or any tools as you slide the fan tray out of the chassis—the fan may still be running.**

3. Grasp the handle on the fan tray and pull firmly to slide the fan tray halfway out of the chassis.

4. When the fan stops spinning, slide the fan tray completely out of the chassis.

5. Place the fan tray in the antistatic bag or on the antistatic mat placed on a flat, stable surface.

Figure 306: Removing a Fan Tray from an EX4200 Switch

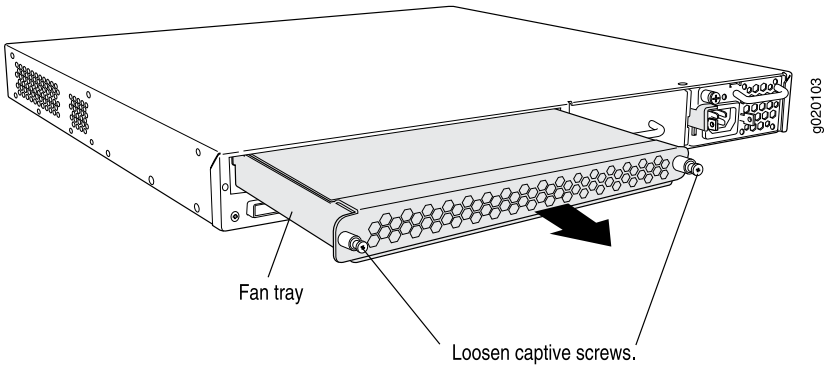

NOTE: **When a fan tray is removed, Fan/Blower is Absent is logged in the system log and the system raises a minor alarm.**

Related Documentation

- Installing a Fan Tray in an EX4200 Switch on page 705
- *Installing and Removing EX4200 Switch Hardware Components*
- Cooling System and Airflow in an EX4200 Switch on page 187
- Field-Replaceable Units in EX4200 Switches on page 185
- *Rear Panel of an EX4200 Switch*

Copyright © 2018, Juniper Networks, Inc.

Installing a Fan Tray in an EX4200 Switch

The fan tray is a hot-removable and hot-insertable field-replaceable unit (FRU) installed in the rear panel of the switch: You can remove and replace it without powering off the switch or disrupting switch functions.

All the EX4200 switch models, except the EX4200-24F-S and EX4200-48T-S switches are shipped with one fan tray pre-installed in the rear panel of the switches. EX4200-24F-S and EX4200-48T-S switches are not shipped with pre-installed fan tray; you must order them separately.

Ensure that you have the following parts and tools available:

- A Phillips (+) screwdriver, number 2

To install a fan tray in an EX4200 switch chassis (see Figure 307 on page 705):

CAUTION: **If you are installing a fan tray in an EX4200 switch, ensure the fans face downwards.**

1. Remove the fan tray from its bag. Using both hands, align the tray with the fan tray guides on the fan tray slot on the rear panel of the chassis and slide it in until it is fully seated.

2. Tighten the screw or screws on the fan tray by using the screwdriver.

Figure 307: Installing a Fan Tray in an EX4200 Switch

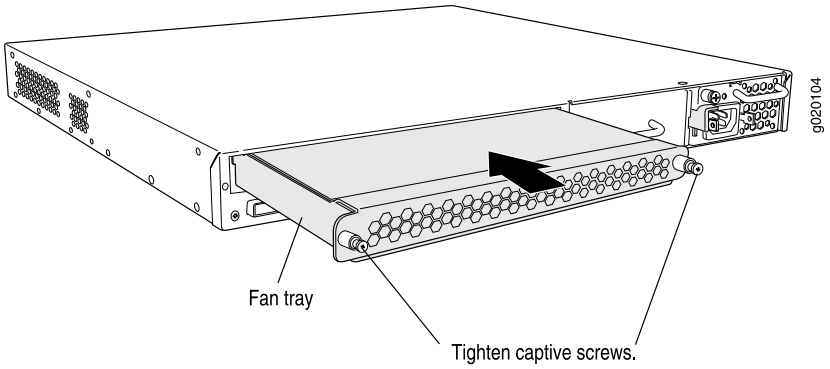

Related Documentation

- Removing a Fan Tray from an EX4200 Switch on page 703
- *Installing and Removing EX4200 Switch Hardware Components*
- Cooling System and Airflow in an EX4200 Switch on page 187
- Field-Replaceable Units in EX4200 Switches on page 185
- *Rear Panel of an EX4200 Switch*

Copyright © 2018, Juniper Networks, Inc.

Copyright © 2018, Juniper Networks, Inc.

CHAPTER 47

Replacing Transceivers and Fiber-Optic Cables

- Removing a Transceiver from a QFX Series Device on page 707
- Installing a Transceiver in a QFX Series Device on page 709
- Disconnecting a Fiber-Optic Cable from a QFX Series Device on page 711
- Connecting a Fiber-Optic Cable to a QFX Series Device on page 712
- Configuring the Port Type on QFX3600 Node Devices on page 714

Removing a Transceiver from a QFX Series Device

The transceivers for the QFX Series are hot-removable and hot-insertable field-replaceable units (FRUs). You can remove and replace them without powering off the device or disrupting device functions.

Before you begin removing a transceiver from the QFX Series, ensure that you have taken the necessary precautions for safe handling of lasers (see "Laser and LED Safety Guidelines and Warnings for the QFX Series" on page 350).

Ensure that you have the following parts and tools available:

- Electrostatic bag or an antistatic mat
- Rubber safety caps to cover the transceiver and fiber-optic cable connector
- Dust cover to cover the port

To remove a transceiver from the QFX Series:

1. Place the antistatic bag or antistatic mat on a flat, stable surface.

2. Label the cable connected to the transceiver so that you can reconnect it correctly.

WARNING: **Do not look directly into a fiber-optic transceiver or into the ends of fiber-optic cables. Fiber-optic transceivers and fiber-optic cables connected to transceivers emit laser light that can damage your eyes.**

WARNING: Do not leave a fiber-optic transceiver uncovered except when inserting or removing a cable. The rubber safety cap keeps the port clean and prevents accidental exposure to laser light.

CAUTION: Do not bend fiber-optic cables beyond their minimum bend radius. Bending the cables beyond their minimum bend radius can damage the cables and cause problems that are difficult to diagnose.

3. Remove the cable connected to the transceiver (see "Disconnecting a Fiber-Optic Cable from a QFX Series Device" on page 711). Cover the transceiver and the end of each fiber-optic cable connector with a rubber safety cap immediately after disconnecting the fiber-optic cables.

4. Using your fingers, pull the ejector lever away from the transceiver to unlock the transceiver.

   CAUTION: Before removing the transceiver, make sure you open the ejector lever completely until you hear it click. This prevents damage to the transceiver.

5. Grasp the transceiver ejector lever and gently slide the transceiver approximately 0.5 in. (1.3 cm) straight out of the port.

   CAUTION: To avoid electrostatic discharge (ESD) damage to the transceiver, do not touch the connector pins at the end of the transceiver.

6. Using your fingers, grasp the body of the transceiver and pull it straight out of the port.

7. Place the transceiver in the electrostatic bag or on the antistatic mat placed on a flat, stable surface.

8. Place the dust cover over the empty port.

Related Documentation

- Installing a Transceiver in a QFX Series Device on page 709

Copyright © 2018, Juniper Networks, Inc.

Installing a Transceiver in a QFX Series Device

The transceivers for the QFX Series are hot-removable and hot-insertable field-replaceable units (FRUs). You can remove and replace them without powering off the device or disrupting device functions.

Before you begin installing a transceiver in a QFX Series device, ensure that you have taken the necessary precautions for safe handling of lasers (see "Laser and LED Safety Guidelines and Warnings for the QFX Series" on page 350).

Ensure that you have a rubber safety cap available to cover the transceiver.

To install a transceiver in the QFX Series:

CAUTION: **To avoid electrostatic discharge (ESD) damage to the transceiver, do not touch the connector pins at the end of the transceiver.**

1. Remove the transceiver from its bag.

2. Check to see whether the transceiver is covered by a rubber safety cap. If it is not, cover the transceiver with a rubber safety cap.

   WARNING: **Do not leave a fiber-optic transceiver uncovered except when inserting or removing a cable. The rubber safety cap keeps the port clean and prevents accidental exposure to laser light.**

3. If the port in which you want to install the transceiver is covered with a dust cover, remove the dust cover and save it in case you need to cover the port later.

4. Using both hands, carefully place the transceiver in the empty port. The connectors must face the device chassis.

   CAUTION: **Before you slide the transceiver into the port, ensure that the transceiver is aligned correctly. Misalignment might cause the pins to bend, making the transceiver unusable. Note that on QFX5100-48T devices, the QSFP+ top and bottom ports have the same orientation for inserting and removing transceivers. On all other QFX Series devices, the ports are designed belly-to-belly, which requires you to turn the transceiver over on the bottom port row. See Figure 308 on page 710 through Figure 311 on page 711 for the correct orientation for your device.**

5. Slide the transceiver in gently until it is fully seated. See Figure 308 on page 710 for an example of inserting an SFP transceiver. Figure 309 on page 710, Figure 310 on page 710,

and Figure 311 on page 711 are examples of inserting QSFP+ transceivers into different QFX Series product SKU devices.

6. Remove the rubber safety cap when you are ready to connect the cable to the transceiver.

WARNING: Do not look directly into a fiber-optic transceiver or into the ends of fiber-optic cables. Fiber-optic transceivers and fiber-optic cables connected to transceivers emit laser light that can damage your eyes.

Figure 308: Installing an SFP Transceiver in the QFX Series

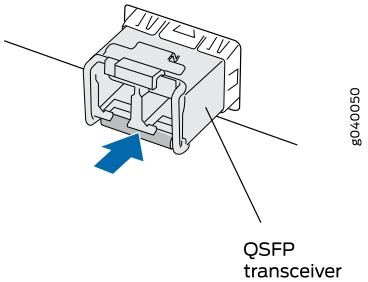

Figure 309: Installing a QSFP+ Transceiver in the QFX Series—Vertical Orientation

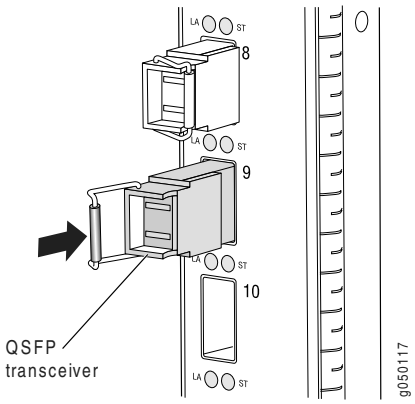

Figure 310: Installing a QSFP+ Transceiver in the QFX Series—Horizontal Orientation

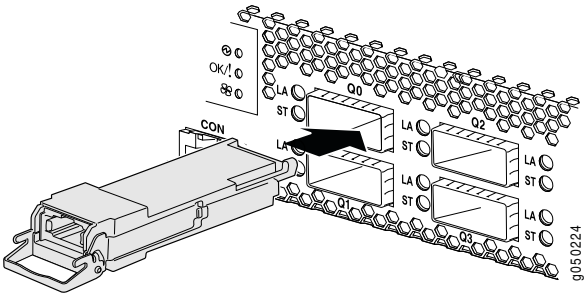

Copyright © 2018, Juniper Networks, Inc.

Figure 311: Installing a QSFP+ Transceiver in a QFX5100-48T

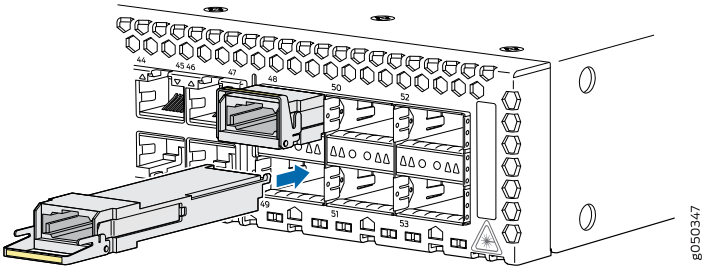

Figure 312: Installing a QSFP28 Transceiver in a QFX10002

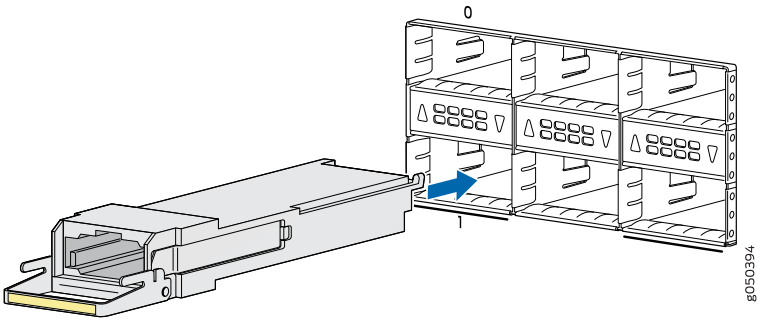

Related Documentation

- Removing a Transceiver from a QFX Series Device on page 707
- Connecting a Fiber-Optic Cable to a QFX Series Device on page 712

Disconnecting a Fiber-Optic Cable from a QFX Series Device

The QFX Series has field-replaceable unit (FRU) optical transceivers to which you can connect fiber-optic cables.

Before you disconnect a fiber-optic cable from an optical transceiver installed in the QFX Series, ensure that you have taken the necessary precautions for safe handling of lasers (see "Laser and LED Safety Guidelines and Warnings for the QFX Series" on page 350).

Ensure that you have the following parts and tools available:

- Rubber safety cap to cover the transceiver
- Rubber safety cap to cover the fiber-optic cable connector

To disconnect a fiber-optic cable from an optical transceiver installed in the QFX Series:

1. (Recommended) Disable the port in which the transceiver is installed by including the **disable** statement at the **[edit interfaces]** hierarchy level for the specific interface.

   WARNING: Do not look directly into a fiber-optic transceiver or into the ends of fiber-optic cables. Fiber-optic transceivers and fiber-optic cables connected to transceivers emit laser light that can damage your eyes.

   WARNING: Do not stare into the laser beam or view it directly with optical instruments even if the interface has been disabled.

2. Carefully unplug the fiber-optic cable connector from the transceiver.

3. Cover the transceiver with a rubber safety cap.

   WARNING: Do not leave a fiber-optic transceiver uncovered except when inserting or removing a cable. The rubber safety cap keeps the port clean and prevents accidental exposure to laser light.

4. Cover the fiber-optic cable connector with the rubber safety cap.

Related Documentation

- Connecting a Fiber-Optic Cable to a QFX Series Device on page 712
- Maintaining Fiber-Optic Cables in a QFX Series Device on page 719

Connecting a Fiber-Optic Cable to a QFX Series Device

The QFX Series has field-replaceable unit (FRU) optical transceivers to which you can connect fiber-optic cables. You can remove and replace the cables without powering off the device or disrupting the switching functions.

Before you connect a fiber-optic cable to an optical transceiver installed in the QFX Series, ensure that you have taken the necessary precautions for safe handling of lasers (see "Laser and LED Safety Guidelines and Warnings for the QFX Series" on page 350).

Copyright © 2018, Juniper Networks, Inc.

To connect a fiber-optic cable to an optical transceiver installed in the QFX Series:

WARNING: Do not look directly into a fiber-optic transceiver or into the ends of fiber-optic cables. Fiber-optic transceivers and fiber-optic cables connected to transceivers emit laser light that can damage your eyes.

WARNING: Do not stare into the laser beam or view it directly with optical instruments even if the interface has been disabled.

1. If the fiber-optic cable connector is covered by a rubber safety cap, remove the cap. Save the cap.

2. If the optical transceiver is covered by a rubber safety cap, remove the cap. Save the cap.

3. Insert the cable connector into the optical transceiver.

4. Secure the cables so that they are not supporting their own weight. Place excess cable out of the way in a neatly coiled loop. Placing fasteners on a loop helps cables maintain their shape.

   CAUTION: Do not bend fiber-optic cables beyond their minimum bend radius. Bending the cables beyond their minimum bend radius can damage the cables and cause problems that are difficult to diagnose.

   CAUTION: Do not let fiber-optic cables hang free from the connector. Do not allow fastened loops of cables to dangle, which stresses the cables at the fastening point.

Related Documentation

- Disconnecting a Fiber-Optic Cable from a QFX Series Device on page 711
- Maintaining Fiber-Optic Cables in a QFX Series Device on page 719

Configuring the Port Type on QFX3600 Node Devices

The QFX3600 Node device provides 16 40-Gbps QSFP+ ports. By default, four ports (labeled **Q0** through **Q3**) operate as 40-gigabit data plane (*fte*) uplink ports for uplink connections between your Node device and your Interconnect devices. Twelve ports (labeled **Q4** through **Q15**) operate as 10-Gigabit Ethernet (*xe*) ports to support 48 10-Gigabit Ethernet interfaces for connections to either endpoint systems or external networks. Optionally, you can choose to configure ports Q0 through Q7 to operate as 40-gigabit data plane uplink ports, and ports Q2 through Q15 to operate as 10-Gigabit Ethernet or 40-Gigabit Ethernet (*xle*) ports.

NOTE: You can use QSFP+ to four SFP+ breakout cables or QSFP+ transceivers with fiber breakout cables to connect the 10-Gigabit Ethernet ports to other devices.

NOTE: When you delete the port type configuration for an individual port or a block of ports, the ports return to operating in their default port type. For example, when you delete the 40-Gigabit Ethernet (xle) port configuration for port Q4, the port returns to operating as a 10-Gigabit Ethernet (xe) port.

NOTE: When the 40-Gigabit Ethernet (xle) ports of a QFX3600 Node device carry traffic at the full line rate, loss of untagged Layer 2 or Layer 3 traffic going across the fabric might occur, as well as increased latency on the Node device. Such effects result from the addition of a 4-byte header to packets traversing the uplink ports on the Node device. The percentage of traffic loss depends on the size of the packets: the greater the packet size, the lower the traffic loss and vice versa. This problem does not affect tagged traffic.

This topic explains how to configure the port type on QFX3600 Node devices.

Before you configure the port type on QFX3600 Node devices:

- Make sure your QFabric system is operational.
- Issue the **show fabric administration inventory node-groups** command to display the existing Node groups and the Node devices in each Node group.

NOTE:

- Only ports Q0 through Q7 can be configured to operate as 40-gigabit data plane (fte) uplink ports.
- Only ports Q2 through Q15 can be configured to operate as 10-Gigabit Ethernet (xe) or 40-Gigabit Ethernet (xle) ports.

Copyright © 2018, Juniper Networks, Inc.

CAUTION: The Packet Forwarding Engine on the QFX3600 Node device is restarted when you commit the port type configuration changes. As a result, you might experience packet loss on the Node device.

The following message may be displayed in the system log file when the Packet Forwarding Engine is restarted. You can ignore this message.

Pipe write error: Broken pipe

flush operation failed

The following steps describe how to configure either a block of ports or an individual port to operate as 40-gigabit data plane uplink (fte) ports, as well as how to delete a 40-gigabit data plane uplink (fte) port configuration.

1. To configure a block of ports to operate as 40-gigabit data plane uplink (fte) ports, specify a port range:

   [edit chassis node-group *name* node-device *name* pic 1]
   root@qfabric# **set fte port-range** ***port-range-low port-range-high***

   For example, to configure ports Q4 through Q7 to operate as 40-gigabit data plane uplink ports:

   [edit chassis node-group BBAK8281 node-device BBAK8309 pic 1]
   root@qfabric# **set fte port-range 4 7**

2. To configure an individual port to operate as a 40-gigabit data plane uplink (fte) port, specify a port number:

   [edit chassis node-group *name* node-device *name* pic 1]
   root@qfabric# **set fte port** ***port-number***

   For example, to configure port Q4 to operate as a 40-gigabit data plane uplink port:

   [edit chassis node-group BBAK8281 node-device BBAK8309 pic 1]
   root@qfabric# **set fte port 4**

3. Review your configuration and issue the **commit** command.

   [edit]
   root@qfabric# **commit**
   commit complete

4. To delete the 40-gigabit data plane uplink (fte) port configuration for a block of ports, specify a port range:

   [edit chassis node-group *name* node-device *name* pic 1]
   root@qfabric# **delete fte port-range** ***port-range-low port-range-high***

   For example, to delete the 40-gigabit data plane uplink port configuration for ports Q4 through Q7:

   [edit chassis node-group BBAK8281 node-device BBAK8309 pic 1]

```
root@qfabric# delete fte port-range 4 7
```

5. To delete the 40-gigabit data plane uplink (fte) port configuration for an individual port, specify a port number:

   ```
   [edit chassis node-group name node-device name pic 1]
   root@qfabric# delete fte port port-number
   ```

   For example, to delete the 40-gigabit data plane uplink port configuration for port Q4:

   ```
   [edit chassis node-group BBAK8281 node-device BBAK8309 pic 1]
   root@qfabric# delete fte port 4
   ```

The following steps describe how to configure either a block of ports or an individual port to operate as 10-Gigabit Ethernet (xe) ports, as well as how to delete a 10-Gigabit Ethernet (xe) port configuration.

1. To configure a block of ports to operate as 10-Gigabit Ethernet (xe) ports, specify a port range:

   ```
   [edit chassis node-group name node-device name pic 0]
   root@qfabric# set xe port-range port-range-low port-range-high
   ```

   For example, to configure ports Q4 through Q7 to operate as 10-Gigabit Ethernet ports:

   ```
   [edit chassis node-group BBAK8281 node-device BBAK8309 pic 0]
   root@qfabric# set xe port-range 4 7
   ```

2. To configure an individual port to operate as a 10-Gigabit Ethernet port, specify a port number:

   ```
   [edit chassis node-group name node-device name pic 0]
   root@qfabric# set xe port port-number
   ```

   For example, to configure port Q4 to operate as a 10-Gigabit Ethernet port:

   ```
   [edit chassis node-group BBAK8281 node-device BBAK8309 pic 0]
   root@qfabric# set xe port 4
   ```

3. Review your configuration and issue the **commit** command.

   ```
   [edit]
   root@qfabric# commit
   commit complete
   ```

4. To delete the 10-Gigabit Ethernet (xe) port configuration for a block of ports, specify a port range:

   ```
   [edit chassis node-group name node-device name pic 0]
   root@qfabric# delete xe port-range port-range-low port-range-high
   ```

   For example, to delete the 10-Gigabit Ethernet port configuration for ports Q4 through Q7:

   ```
   [edit chassis node-group BBAK8281 node-device BBAK8309 pic 0]
   ```


Copyright © 2018, Juniper Networks, Inc.

```
root@qfabric# delete xe port-range 4 7
```

5. To delete the 10-Gigabit Ethernet (xe) port configuration for an individual port, specify a port number:

   ```
   [edit chassis node-group name node-device name pic 0]
   root@qfabric# delete xe port port-number
   ```

   For example, to delete the 10-Gigabit Ethernet port configuration for port Q4:

   ```
   [edit chassis node-group BBAK8281 node-device BBAK8309 pic 0]
   root@qfabric# delete xe port 4
   ```

The following steps describe how to configure either a block of ports or an individual port to operate as 40-Gigabit Ethernet (xle) ports, as well as how to delete a 40-Gigabit Ethernet (xle) port configuration.

1. To configure a block of ports to operate as 40-Gigabit Ethernet (xle) ports, specify a port range:

   ```
   [edit chassis node-group name node-device name pic 1]
   root@qfabric# set xle port-range port-range-low port-range-high
   ```

   For example, to configure ports Q4 through Q7 to operate as 40-Gigabit Ethernet ports:

   ```
   [edit chassis node-group BBAK8281 node-device BBAK8309 pic 1]
   root@qfabric# set xle port-range 4 7
   ```

2. To configure an individual port to operate as a 40-Gigabit Ethernet (xle) port, specify a port number:

   ```
   [edit chassis node-group name node-device name pic 1]
   root@qfabric# set xle port port-number
   ```

   For example, to configure port Q4 to operate as a 40-Gigabit Ethernet port:

   ```
   [edit chassis node-group BBAK8281 node-device BBAK8309 pic 1]
   root@qfabric# set xle port 4
   ```

3. Review your configuration and issue the **commit** command.

   ```
   [edit]
   root@qfabric# commit
   commit complete
   ```

4. To delete the 40-Gigabit Ethernet (xle) port configuration for block of ports, specify a port range:

   ```
   [edit chassis node-group name node-device name pic 1]
   root@qfabric# delete xle port-range port-range-low port-range-high
   ```

   For example, to delete the 40-Gigabit Ethernet port configuration for ports Q4 through Q7:

   ```
   [edit chassis node-group BBAK8281 node-device BBAK8309 pic 1]
   ```

```
root@qfabric# delete xle port-range 4 7
```

5. To delete the 40-Gigabit Ethernet (xle) port configuration for an individual port, specify a port number:

   ```
   [edit chassis node-group name node-device name pic 1]
   root@qfabric# delete xle port port-number
   ```

   For example, to delete the 40-Gigabit Ethernet port configuration for port Q4:

   ```
   [edit chassis node-group BBAK8281 node-device BBAK8309 pic 1]
   root@qfabric# delete xle port 4
   ```

Related Documentation

- Understanding Node Devices on page 18
- *Understanding Interfaces on the QFabric System*
- *pic*

Copyright © 2018, Juniper Networks, Inc.

CHAPTER 48

Routine Maintenance

- Maintaining the Air Filters in a QFX3008-I Interconnect Device on page 719
- Maintaining Fiber-Optic Cables in a QFX Series Device on page 719

Maintaining the Air Filters in a QFX3008-I Interconnect Device

To maintain the air filters in a QFX3008-I Interconnect device.

- Check the air filters regularly for dust and debris. Replace the filter elements as needed. The filter elements degrade over time, so the filter elements in use, as well as spares, should be replaced every 6 months.
- Use spare filter elements within 1 year of manufacture. Check for the date of manufacture printed on the filter.
- Store spare filter elements in a dark, cool, and dry place. Storing the filter elements at higher temperatures, or where they can be exposed to ultraviolet (UV) radiation, hydrocarbon emissions, or vapors from solvents can significantly reduce their life.

CAUTION: **Always keep the air filters in place while the device is operating. Because the fans are very powerful, they could pull small bits of wire or other materials into the device through the unfiltered air intake. This could damage device components.**

Related Documentation

- Removing a Bottom Air Filter from a QFX3008-I Interconnect Device on page 620
- Installing a Bottom Air Filter in a QFX3008-I Interconnect Device on page 622
- Removing a Side Air Filter from a QFX3008-I Interconnect Device on page 623
- Installing a Side Air Filter in a QFX3008-I Interconnect Device on page 625

Maintaining Fiber-Optic Cables in a QFX Series Device

To maintain fiber-optic cables in the QFX Series:

- When you unplug a fiber-optic cable from a transceiver, place rubber safety caps over the transceiver and on the end of the cable.
- Anchor fiber-optic cable to avoid stress on the connectors. When attaching a fiber-optic cable to a transceiver, be sure to secure the fiber-optic cable so that it is not supporting its own weight as it hangs to the floor. Never let a fiber-optic cable hang free from the connector.
- Do not bend fiber-optic cables beyond their minimum bend radius. Bending the cables beyond their minimum bend radius can damage the cables and cause problems that are difficult to diagnose.
- Frequent plugging and unplugging of fiber-optic cables in and out of optical instruments can damage the instruments, which are expensive to repair. Attach a short fiber extension to the optical equipment. Any wear and tear due to frequent plugging and unplugging is then absorbed by the short fiber extension, which is easier and less expensive to replace than the instruments.
- Keep fiber-optic cable connections clean. Microdeposits of oil and dust in the canal of the transceiver or cable connector can cause loss of light, reduction in signal power, and possibly intermittent problems with the optical connection.

  To clean the transceiver canal, use an appropriate fiber-cleaning device such as RIFOCS Fiber Optic Adaptor Cleaning Wands (part number 946). Follow the directions in the cleaning kit you use.

  After cleaning the transceiver, make sure that the connector tip of the fiber-optic cable is clean. Use only an approved alcohol-free fiber-optic cable cleaning kit such as the Cletop-S® Fiber Cleaner. Follow the directions in the cleaning kit you use.

Related Documentation

- Connecting a Fiber-Optic Cable to a QFX Series Device on page 712
- Disconnecting a Fiber-Optic Cable from a QFX Series Device on page 711

Copyright © 2018, Juniper Networks, Inc.

CHAPTER 49

Viewing QFX3100 System Information

- Chassis Status LEDs on a QFX3100 Director Device on page 721
- Management Port LEDs on a QFX3100 Director Device on page 722
- Network Module Port LEDs on a QFX3100 Director Device on page 723
- AC Power Supply LED on a QFX3100 Director Device on page 724

Chassis Status LEDs on a QFX3100 Director Device

The QFX3100 Director device has three chassis LEDs on the bottom left side of the front panel.

See Figure 313 on page 721.

Figure 313: Chassis LEDs

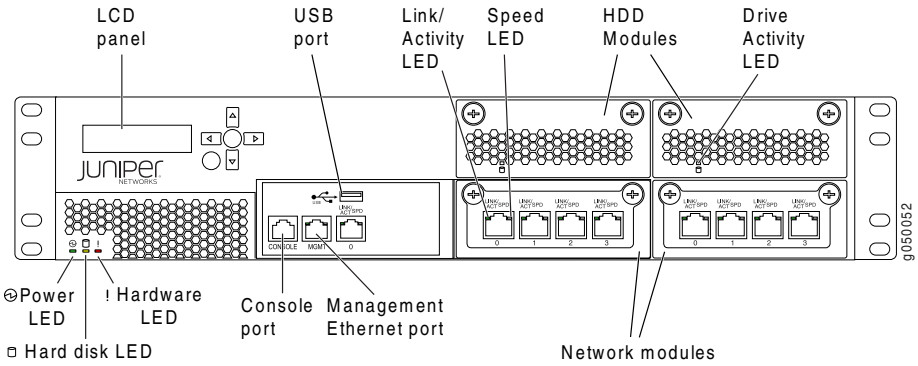

Table 159 on page 721 describes the chassis LEDs on a QFX3100 Director device, their colors and states, and the status they indicate.

Table 159: Chassis LEDs on a QFX3100 Director Device

LED	Color	State	Description
Power	Unlit	Off	Device is powered off.
	Green	On steadily	Device is powered on.

Table 159: Chassis LEDs on a QFX3100 Director Device (continued)

LED	Color	State	Description
Hard disk	Unlit	Off	Data is not being read from or written to the hard disk drive.
	Amber	Flickering	Data is being read from or written to the hard disk drive.
Alarm	Unlit	Off	QFX3100 Director device hardware has no major (red) alarm conditions.
	Red	On steadily	QFX3100 Director device hardware is hotter than the maximum high temperature threshold.
		Fast blinking	At least one fan has failed.
		Slow blinking	A power supply is not supplying power to the QFX3100 Director device.

Related Documentation

- Front Panel of a QFX3100 Director Device on page 30

Management Port LEDs on a QFX3100 Director Device

The management port (labeled **MGMT**) on the QFX3100 Director device has two LEDs that indicate link/activity and speed (see Figure 314 on page 722).

Figure 314: LEDs on the Management Port on a QFX3100 Director Device

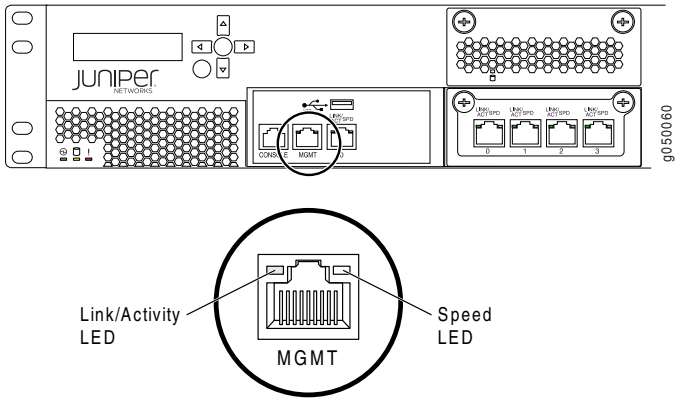

Table 160 on page 723 describes the Link/Activity and Speed LED.

Copyright © 2018, Juniper Networks, Inc.

Table 160: Link/Activity LED on the Management Port on a QFX3100 Director Device

LED	Color	State	Description
Link/Activity	Unlit	Off	There is no link established.
	Green	On steadily	A link is established, but there is no activity on the link.
		Flickering	There is link activity.
Speed	Unlit	Off	10-Mbps link is established. However, if the Link/Activity LED is also unlit, this indicates there is no link established.
	Green	On steadily	100-Mbps link is established.
	Amber	On steadily	1-Gbps link is established.

Related Documentation

- Front Panel of a QFX3100 Director Device on page 30
- Installing and Connecting a QFX3100 Director Device on page 377

Network Module Port LEDs on a QFX3100 Director Device

The network module ports (labeled **0** through **3**) on QFX3100 Director device have two LEDs that indicate link speed and activity (see Figure 315 on page 723).

NOTE: Figure 315 on page 723 shows the RJ-45 network module ports. The LEDs on the SFP network module ports are identical.

Figure 315: Network Module Port LEDs on a QFX3100 Director Device

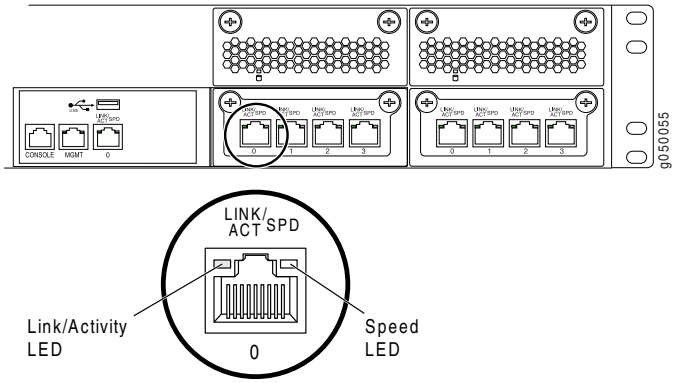

Table 161 on page 724 describes the network module port LEDs.

NOTE: In most cases, when the QFX3100 Director device is configured as part of a QFabric system, the link speed is 1000 Mbps.

Table 161: Network Module Port LEDs on a QFX3100 Director Device

LED	Color	State	Description
Link/Activity	Off	Unlit	The port is not active, or there is no power to the network module.
	Green	On steadily	The port and the link are active, but there is no link activity.
		Flickering	The port and the link are active, and there is link activity.
Speed	Off	Unlit	10 Mbps or there is no power to the network module.
	Green	On steadily	100 Mbps.
	Amber	On steadily	1000 Mbps.

Related Documentation

- Front Panel of a QFX3100 Director Device on page 30
- Installing and Connecting a QFX3100 Director Device on page 377

AC Power Supply LED on a QFX3100 Director Device

An AC power supply has one bicolored power supply status LED on its faceplate. This LED displays information about the status of the power supply. See Figure 316 on page 724.

Figure 316: AC Power Supply LEDs on a QFX3100 Director Device

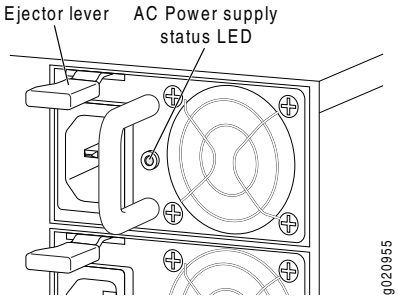

Table 162 on page 725 describes the power supply status LED on an AC power supply in a QFX3100 Director device.

Copyright © 2018, Juniper Networks, Inc.

Table 162: Power Supply LED on a QFX3100 Director Device

LED	Color	State	Description
Power	Unlit	Off	There is no power to the power supply, or the input voltage is not within the normal operating range.
	Green	On steadily	Power supply is functioning normally, and is powering the system.
	Yellow	On steadily	Power supply is in standby mode. The power supply is powered on but is not providing power to the system.

Related Documentation

- AC Power Specifications for a QFX3100 Director Device on page 277
- Connecting AC Power to a QFX3100 Director Device on page 383

Copyright © 2018, Juniper Networks, Inc.

CHAPTER 50

Viewing QFX3008-I System Information

- Chassis Status LEDs on a QFX3008-I Interconnect Device on page 727
- Control Board LEDs on a QFX3008-I Interconnect Device on page 729
- 16-Port QSFP+ Front Card LEDs on a QFX3008-I Interconnect Device on page 731
- Rear Card LEDs on a QFX3008-I Interconnect Device on page 733
- AC Power Supply LEDs on a QFX3008-I Interconnect Device on page 734
- Wiring Tray LEDs on a QFX3008-I Interconnect Device on page 735

Chassis Status LEDs on a QFX3008-I Interconnect Device

The front panel of the chassis of a QFX3008-I Interconnect device has four sets of informational LEDs to the left of the LCD panel.

See Figure 317 on page 727.

Figure 317: Chassis Status LEDs

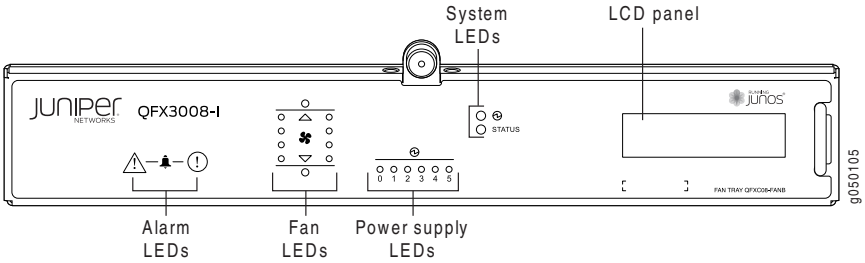

Table 163 on page 728 describes the chassis status LEDs in a QFX3008-I Interconnect device, their colors and states, and the status they indicate.

Table 163: Chassis Status LEDs on a QFX3008-I Interconnect Device

Description	Color	State	Description
Minor alarm (triangle)	Unlit	Off	No alarm.
	Yellow or Amber	On steadily	A minor alarm indicates a noncritical condition that requires monitoring or maintenance. A minor alarm that is left unchecked might cause interruption in service or performance degradation. The minor and major alarm LEDs can be lit simultaneously. See "Chassis Alarm Messages on a QFX3008-I Interconnect Device" on page 898.
Major alarm (round)	Unlit	Off	No alarm.
	Red	On steadily	A major alarm indicates a critical error condition that requires immediate action. The minor and major alarm LEDs can be lit simultaneously. See "Chassis Alarm Messages on a QFX3008-I Interconnect Device" on page 898.
Fan trays	Unlit	Off	There is no power to the component.
	Amber	Blinking	There is a component failure, and the indicated fan tray should be replaced.
	Green	On steadily	The fan tray is operating normally.
Power supplies	Unlit	Off	There is no input power to the power supply.
	Amber	Blinking	There is a component failure, and the indicated power supply should be replaced.
	Green	On steadily	The AC input and DC output for the power supply are OK.
System power	Unlit	Off	The device is powered off.
	Amber	Blinking	One or more power component failures are generating one or more alarms.
	Green	On steadily	The AC input and DC output for the system are OK.

Copyright © 2018, Juniper Networks, Inc.

Table 163: Chassis Status LEDs on a QFX3008-I Interconnect Device (continued)

Description	Color	State	Description
System status	Unlit	Off	The device is powered off.
	Green	On steadily	The fan trays and front and rear cards are operating normally.
		Intermittent blinking	The beacon feature has been enabled on the device using the **request chassis beacon** command.
	Amber	Blinking	One or more fan tray or front or rear card component failures are generating one or more alarms.

Related Documentation

- Front Panel Display of the QFX3008-I Interconnect Device on page 47
- Understanding Alarms on page 897
- *request chassis beacon*

Control Board LEDs on a QFX3008-I Interconnect Device

Each Control Board has three LEDs on the left side of the module front panel that indicate Control Board status. Each SFP+ management port has two LEDs that indicate link status and activity. See Figure 318 on page 729.

Figure 318: Control Board LEDs on a QFX3008-I Interconnect Device

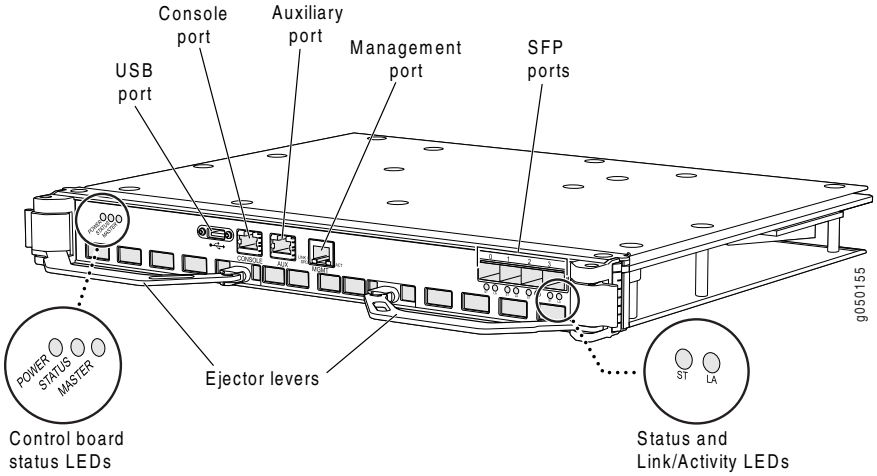

Table 164 on page 730 describes these LEDs, their colors and states, and the status they indicate.

Table 164: Control Board LEDs on a QFX3008-I Interconnect Device

LED	Color	State	Description
Power	Unlit	Off	There is no power to the Control Board, or the Control Board is not fully seated in the chassis. See "Installing a Control Board in a QFX3008-I Interconnect Device" on page 631.
	Green	On steadily	Control Board is powered on.
	Amber	Blinking	Control Board is offline.
Status	Green	On steadily	Control Board is operating normally.
		Intermittent blinking	The beacon feature has been enabled on the card using the **request chassis beacon** command.
	Amber	On steadily	Software is loading on the Control Board.
		Blinking	Control Board has failed to boot properly and needs to be reset or reinstalled. See "Installing a Control Board in a QFX3008-I Interconnect Device" on page 631.
Master	Unlit	Off	Control Board is acting as the backup Control Board.
	Green	On steadily	Control Board is acting as the master Control Board.

Table 165 on page 730 describes the SFP+ port LEDs.

Table 165: Control Board SFP+ Port LEDs on a QFX3008-I Interconnect Device

LED	Color	State	Description
Link/Activity	Unlit	Off	No link is established, there is a fault, or the link is down.
	Green	On steadily	A link is established, but there is no link activity.
		Flickering	A link is established, and there is link activity.
Status	Unlit	Off	No transceiver is installed in the port, the port is configured for a different interface, or the transceiver is not supported.
	Green	On steadily	A transceiver is installed in the port.

Copyright © 2018, Juniper Networks, Inc.

Related Documentation

- Control Board in a QFX3008-I Interconnect Device on page 53
- Taking a Control Board Offline in a QFX3008-I Interconnect Device on page 627
- Removing a Control Board from a QFX3008-I Interconnect Device on page 629
- *request chassis beacon*

16-Port QSFP+ Front Card LEDs on a QFX3008-I Interconnect Device

Each 16-port QSFP+ front card has two LEDs at the bottom of the module front panel that indicate front card status. Each QSFP+ port has two LEDs that indicate link status and activity. See Figure 319 on page 731.

Figure 319: 16-Port QSFP+ Front Card LEDs on a QFX3008-I Interconnect Device

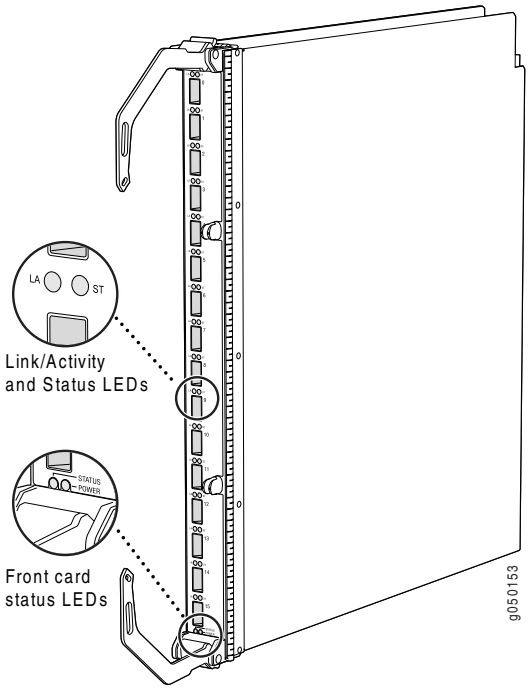

Table 166 on page 732 describes these LEDs, their colors and states, and the status they indicate.

Table 166: 16-Port QSFP+ Front Card LEDs on a QFX3008-I Interconnect Device

LED	Color	State	Description
Status	Green	On steadily	Front card is operating normally.
		Intermittent blinking	The beacon feature has been enabled on the card using the **request chassis beacon** command.
	Amber	On steadily	Software is loading on the front card.
		Blinking	Front card has failed to boot properly and needs to be reset or reinstalled. See "Installing a 16-Port QSFP+ Front Card in a QFX3008-I Interconnect Device" on page 636.
Power	Unlit	Off	There is no power to the front card, or the front card is not fully seated in the chassis. See "Installing a 16-Port QSFP+ Front Card in a QFX3008-I Interconnect Device" on page 636.
	Green	On steadily	Front card is powered on.
	Amber	Blinking	Front card is offline.

Table 167 on page 732 describes the QSFP+ port LEDs.

Table 167: 16-Port QSFP+ Front Card Port LEDs on a QFX3008-I Interconnect Device

LED	Color	State	Description
Link/Activity	Unlit	Off	No link is established, there is a fault, or the link is down.
	Green	On steadily	A link is established, but there is no link activity.
		Flickering	A link is established, and there is link activity.
Status	Unlit	Off	No transceiver is installed in the port, the port is configured for a different interface, or the transceiver is not supported.
	Green	On steadily	A transceiver is installed in the port.

Related Documentation

- 16-Port QSFP+ Front Cards in a QFX3008-I Interconnect Device on page 52
- Installing a 16-Port QSFP+ Front Card in a QFX3008-I Interconnect Device on page 636

Copyright © 2018, Juniper Networks, Inc.

- Taking a 16-Port QSFP+ Front Card Offline in a QFX3008-I Interconnect Device on page 633
- Removing a 16-Port QSFP+ Front Card from a QFX3008-I Interconnect Device on page 634

Rear Card LEDs on a QFX3008-I Interconnect Device

Each rear card has two LEDs on the right side of the module front panel that indicate rear card status. See Figure 320 on page 733.

Figure 320: Rear Card LEDs on a QFX3008-I Interconnect Device

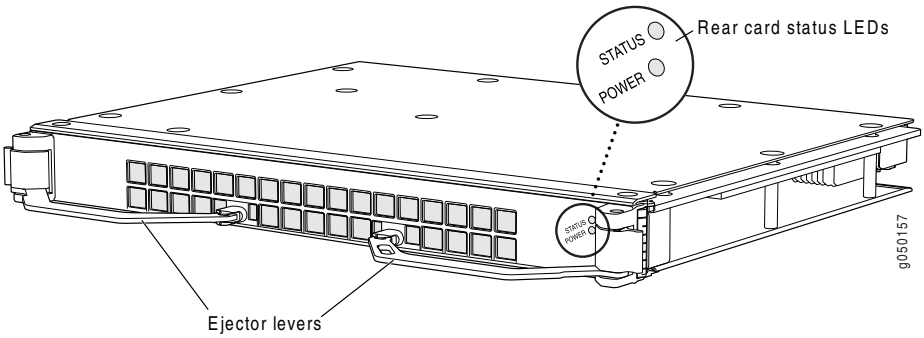

Table 168 on page 733 describes these LEDs, their colors and states, and the status they indicate.

Table 168: Rear Card LEDs on a QFX3008-I Interconnect Device

LED	Color	State	Description
Status	Green	On steadily	Rear card is operating normally.
		Intermittent blinking	The beacon feature has been enabled on the card using the **request chassis beacon** command.
	Amber	On steadily	Software is loading on the rear card.
		Blinking	Rear card has failed and needs to be replaced. See "Installing a 16-Port QSFP+ Front Card in a QFX3008-I Interconnect Device" on page 636.
Power	Unlit	Off	There is no power to the rear card, or the rear card is not fully seated in the chassis. See "Installing a Rear Card in a QFX3008-I Interconnect Device" on page 641.
	Green	On steadily	Rear card is powered on.
	Amber	Blinking	Rear card is offline.

Copyright © 2018, Juniper Networks, Inc.

Related Documentation

- Installing a Rear Card in a QFX3008-I Interconnect Device on page 641
- Taking the Rear Card Offline in a QFX3008-I Interconnect Device on page 638
- Removing a Rear Card from a QFX3008-I Interconnect Device on page 640

AC Power Supply LEDs on a QFX3008-I Interconnect Device

An AC power supply has three LEDs on its faceplate. These LEDs display information about the status of the power supply. See Figure 321 on page 734.

Figure 321: AC Power Supply LEDs on a QFX3008-I Interconnect Device

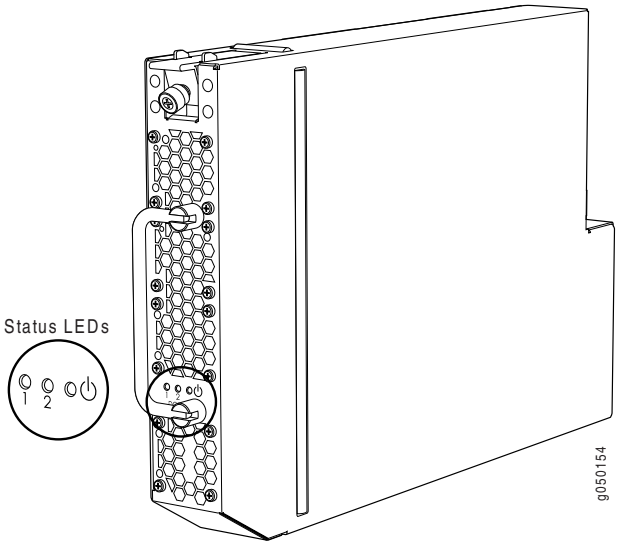

Table 169 on page 734 describes the LEDs on an AC power supply on a QFX3008-I Interconnect device.

Table 169: AC Power Supply LEDs on a QFX3008-I Interconnect Device

LED	Color	State	Description
Status (**1** or **2**) NOTE: Each power supply contains two isolated 2000-W channels that produce 54 VDC. There is a status LED for each channel.	Unlit	Off	Indicates one of the following: • DC output voltage is not within normal operating range. • Power supply is not supplying DC power correctly.
	Solid	Green	DC power output is within normal operating range.
	Blinking	Amber	Power supply has been disabled internally by the system.

Copyright © 2018, Juniper Networks, Inc.

Table 169: AC Power Supply LEDs on a QFX3008-I Interconnect Device (continued)

LED	Color	State	Description
Power	Unlit	Off	Indicates one of the following: • Power supply is disconnected from power feed. • AC input voltage is not within normal operating range. • No power input.
	Solid	Green	• Power supply is functioning normally.

Related Documentation

- AC Power Specifications for a QFX3008-I Interconnect Device with Single-Phase Wiring Trays on page 281
- Power Requirements for a QFX3008-I Interconnect Device on page 283
- AC Power Cord Specifications for a QFX3008-I Interconnect Device with Single-Phase Wiring Trays on page 283
- Connecting AC Power to a QFX3008-I Interconnect Device with Single-Phase Wiring Trays on page 411

Wiring Tray LEDs on a QFX3008-I Interconnect Device

A wiring tray has three LEDs on its faceplate. The text **1**, **2**, or **3** next to the LEDs indicates which appliance inlet on the single-phase wiring tray or which phase on the three-phase wiring tray the LED corresponds to. See Figure 322 on page 735 and Figure 323 on page 736.

Figure 322: AC Single-Phase Wiring Tray LEDs on a QFX3008-I Interconnect Device

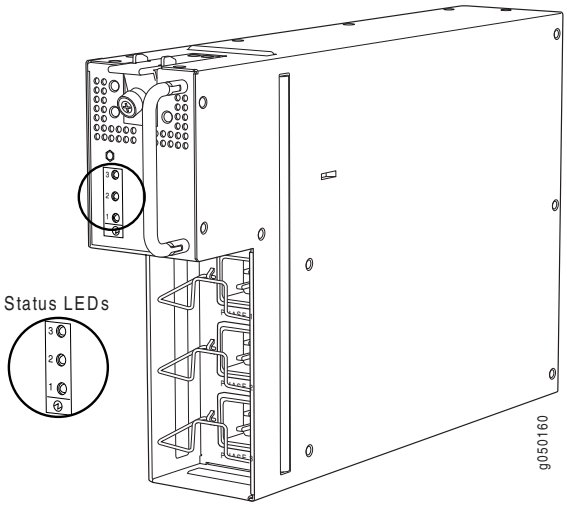

Figure 323: AC Three-Phase Wiring Tray LEDs on a QFX3008-I Interconnect Device

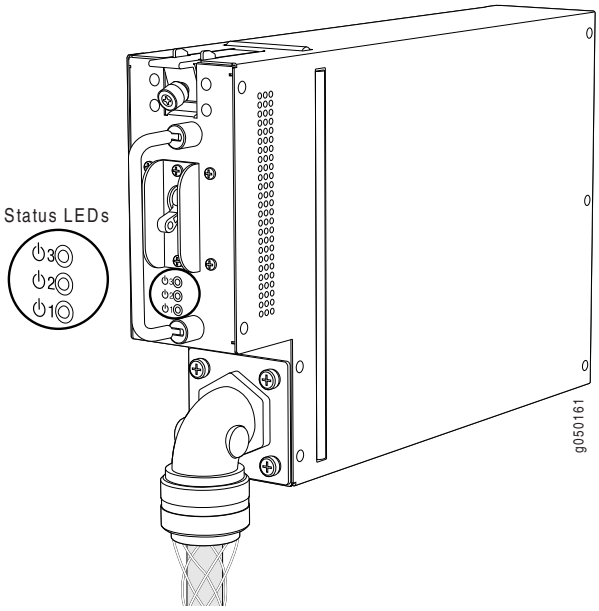

Table 170 on page 736 describes the LEDs on an AC wiring tray.

Table 170: AC Wiring Tray LEDs on a QFX3008-I Interconnect Device

LED	State	Description
Power (Phase **1**, **2**, or **3**.	Unlit	Indicates one of the following: • Wiring tray is disconnected from power feed. • AC power input voltage is not within normal operating range. • No AC power input.
	Green	• AC power input voltage is within normal operating range.

Related Documentation

- AC Power Specifications for a QFX3008-I Interconnect Device with Single-Phase Wiring Trays on page 281
- Power Requirements for a QFX3008-I Interconnect Device on page 283
- Connecting AC Power to a QFX3008-I Interconnect Device with Single-Phase Wiring Trays on page 411

Copyright © 2018, Juniper Networks, Inc.

CHAPTER 51

Viewing QFX5100 System Information

- Chassis Status LEDs on a QFX5100 Device on page 737
- Management Port LEDs on a QFX5100 Device on page 739
- Access Port and Uplink Port LEDs on a QFX5100 Device on page 741
- Fan Module LED on a QFX5100 Device on page 744
- AC Power Supply LEDs on a QFX5100 Device on page 745
- DC Power Supply LEDs on a QFX5100 Device on page 746

Chassis Status LEDs on a QFX5100 Device

The QFX5100 switch series has four status LEDs on the FRU side of the chassis, next to the management ports (see Figure 324 on page 737).

Figure 324: Chassis Status LEDs on a QFX5100 Switch

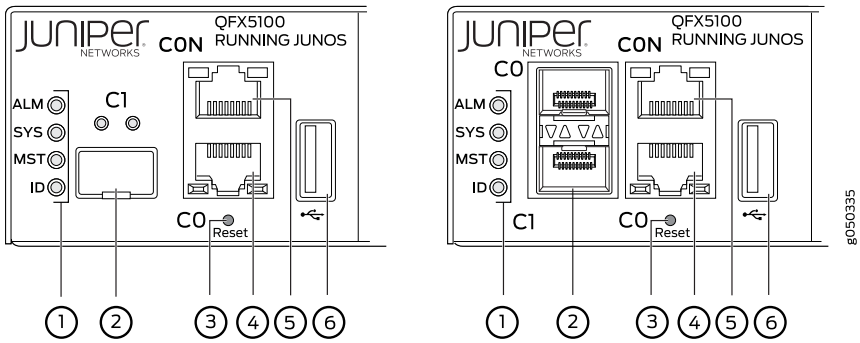

1—Status LEDs	4—em0–RJ-45 (10/100/1000 Base-T) management Ethernet port (C0)
2—em1–SFP management Ethernet port (C1) Cage (socket for either 10/100/1000 Base-T RJ45 SFP or 1GbE fiber SFP)	5—RJ-45 console port (CON)
3—**Reset** button, see caution statement below	6—USB port

CAUTION: Do not use the Reset button to restart the power sequence unless under the direction of Juniper Networks Technical Assistance Center (JTAC).

Table 171 on page 738 describes the chassis status LEDs on a QFX5100 switch, their colors and states, and the status they indicate. You can view the colors of the three LEDs remotely through the CLI by issuing the operational mode command **show chassis led**.

Table 171: Chassis Status LEDs on a QFX5100 Switch

Name	Color	State	Description
ALM—Alarm or beacon	Unlit	Off	The switch is halted or there is no alarm.
	Red	On steadily	A major hardware fault has occurred, such as a temperature alarm or power failure, and the switch has halted. Power off the QFX5100 switch by setting the AC power source outlet to the OFF (O) position, or unplugging the AC power cords. Correct any voltage or site temperature issues, and allow the switch to cool down. Power on the QFX5100 switch and monitor the power supply and fan LEDs to help determine where the error is occurring.
	Amber	On steadily	A minor alarm has occurred, such as a software error. Power off the QFX5100 switch by setting the AC power source outlet to the OFF (O) position, or unplugging the AC power cords. Power on the QFX5100 switch and monitor the status LEDs to ensure that Junos OS boots properly.
SYS—System	Unlit	Off	The switch is powered off or halted.
	Green	On steadily	Junos OS for QFX Series is loaded on the switch.
	Green	Blinking	The switch is participating as: • A member in a QFX Virtual Chassis • A leaf device in a Virtual Chassis Fabric (VCF) • A spine device in a VCF • A Routing Engine Master in a VCF • A Routing Engine Backup in a VCF

Copyright © 2018, Juniper Networks, Inc.

Table 171: Chassis Status LEDs on a QFX5100 Switch (continued)

Name	Color	State	Description
MST–Master in a QFX Virtual Chassis or Routing Engine Master in a VCF	Unlit	Off	The switch is a linecard member in a QFX Virtual Chassis.
	Green	On steadily	The switch is one of the following: • A standalone switch • In the master role in a QFX Virtual Chassis • Is the routing engine master in a VCF
	Green	Blinking	The switch is the backup master in a QFX Virtual Chassis or the backup routing engine in a VCF.
ID–Identification	Unlit	Off	The beacon feature is not enabled on the switch. This feature is enabled using the **request chassis beacon** command.
	Blue	Blinking	The beacon feature is enabled on the switch. This feature is enabled using the **request chassis beacon** command.

Related Documentation

- Management Panel of a QFX5100 Device on page 85
- *show chassis alarms*
- *request chassis beacon*

Management Port LEDs on a QFX5100 Device

The management ports (labeled **C0** for 10/100/1000 Base-T and **C1** for 10/100/1000 Base-T and SFP 1000 Base-X connections) on a QFX5100 switch have two LEDs that indicate link status and link activity (see Figure 325 on page 740). The left LED indicates status; the right LED indicates link/activity.

Figure 325: Management Port LEDs on a QFX5100 Switch

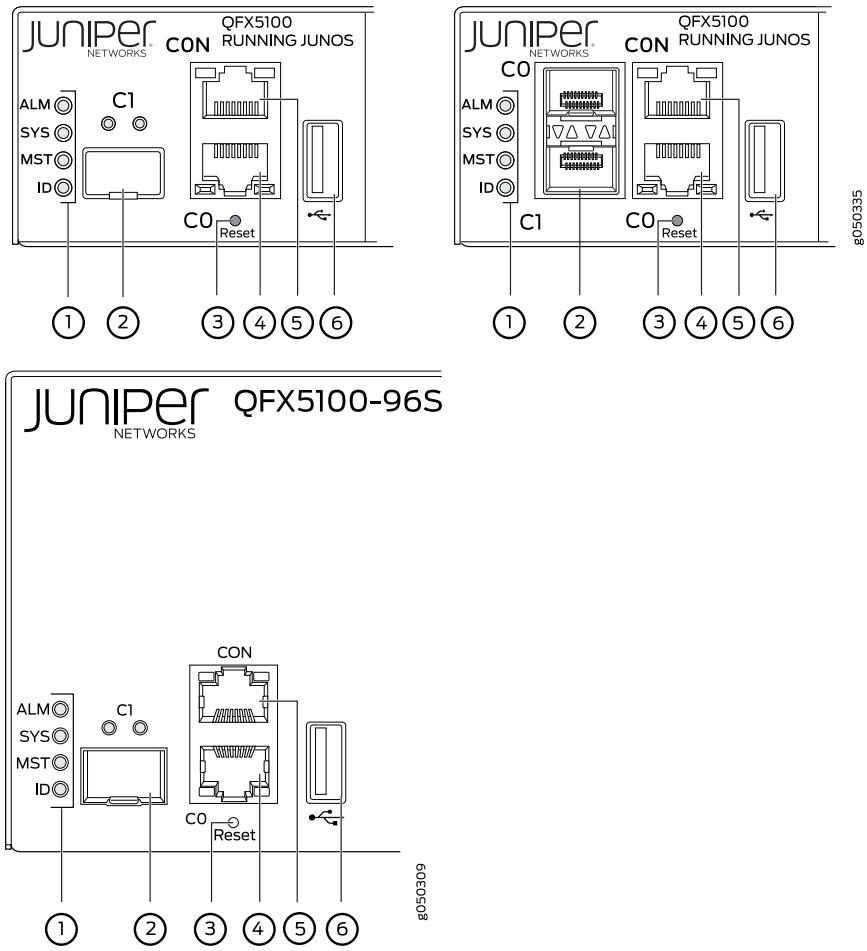

1—Status LEDs	4—em0–RJ-45 (10/100/1000 Base-T) management Ethernet port (C0)
2—em1–SFP management Ethernet port (C1) Cage (socket for either 10/100/1000 Base-T RJ45 SFP or 1GbE fiber SFP)	5—RJ-45 console port (CON)
3—**Reset** button, see caution statement below	6—USB port

CAUTION: Do not use the **Reset** button to restart the power sequence unless under the direction of Juniper Networks Technical Assistance Center (JTAC).

Table 172 on page 741 describes the management port LEDs.

Copyright © 2018, Juniper Networks, Inc.

Table 172: Management Port LEDs on a QFX5100 Switch

LED	Color	State	Description
Link/Activity	Unlit	Off	No link is established, there is a fault, or the link is down.
	Green	On steadily	A link is established, but there is no link activity.
		Blinking or flickering	A link is established, and there is link activity.
Status	Unlit	Off	Either the port speed is 10 M or the link is down.
	Green	On steadily	The port speed is 1000 M.
	Amber	On steadily	The port speed is 100 M.

Related Documentation

- Management Panel of a QFX5100 Device on page 85
- *Connecting a QFX5100 Device to a Network for Out-of-Band Management*

Access Port and Uplink Port LEDs on a QFX5100 Device

The Link/Activity and Status LED configuration for QFX5100 switches use bi-colored LEDs. The link LED indicates link activity or a fault. The status LED indicates transceiver presence. See Table 173 on page 742 to locate the position and type of LED for your QFX5100 model.

Table 173: QFX5100 Access Port and Uplink LED Locations

Model	Port Type	Indicators	Location
QFX5100-24Q	QSFP+	Link Status	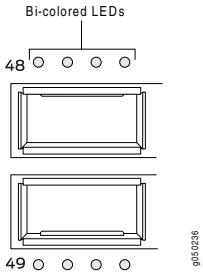
QFX5100-48S and QFX5100-48SH	SFP+	Link Status	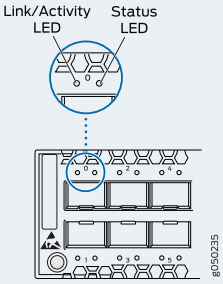
QFX5100-48T and QFX5100-48TH	10GBASE-T	Link	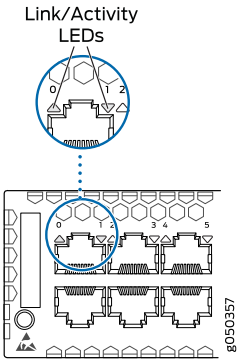
QFX5100-96S	SFP+	Link Status	

Copyright © 2018, Juniper Networks, Inc.

Table 173: QFX5100 Access Port and Uplink LED Locations (continued)

Model	Port Type	Indicators	Location
			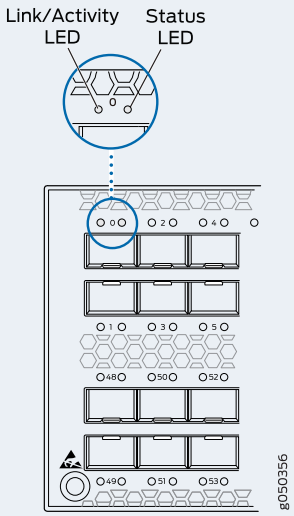

Table 174 on page 743 describes how to interpret the SFP+ port LEDs.

Table 174: Network Port LEDs on SFP+ Ports on a QFX5100 Switch

LED	Color	State	Description
Link/Activity	Unlit	Off	The port is administratively disabled, there is no power, the link is down, or there is a fault.
	Green	On steadily	A link is established, but there is no link activity.
		Blinking	A link is established, and there is link activity.
	Amber	Blinking	The beacon is enabled on the port. On QFX5100-48T, it indicates a fault.
Status NOTE: Not applicable for QFX5100-48T or QFX5100-48TH.	Unlit	Off	The link is down.
	Amber	Blinking	The beacon function is enabled on the port.
	Green	Blinking	A 1-Gigabit Ethernet transceiver is installed in the port and the link is established.
	Green	On steadily	A 10-Gigabit Ethernet transceiver is installed in the port and link is established.

As shown in Table 173 on page 742, there are four bi-color LEDs for each QSFP+ port. The first LED is used and the remaining LEDs are not used when the interface is configured for 40-Gigabit Ethernet and connected to a QSFP+ transceiver. All four LEDs are used when the interface is configured for 10-Gigabit Ethernet and the port is connected using

an optical split cable or a copper DACBO cable. Table 175 on page 744 describes how to interpret the QSFP+ LEDs.

Table 175: Network Port LEDs on QSFP+ Ports on a QFX5100 Switch

Color	State	Description
Unlit	Off	The port is administratively disabled, there is no power, the link is down, or there is a fault. NOTE: When configured for 10-Gigabit Ethernet, the LED remains unlit only if all four of the 10-Gigabit Ethernet SFP+ breakout links are down.
Green	On steadily	A link is established, but there is no link activity. NOTE: When configured for 10-Gigabit Ethernet, the LED is lit green when at least one of the four 10-Gigabit Ethernet SFP+ breakout links is established.
	Blinking	A link is established, and there is link activity. NOTE: When configured for 10-Gigabit Ethernet, the LED is lit green when at least one of the four 10-Gigabit Ethernet SFP+ breakout links is established.
Amber	Blinking	All four LEDs blink to indicate the beacon function was enabled on the port.

Related Documentation

- Management Panel of a QFX5100 Device on page 85
- Installing a Transceiver in a QFX Series Device on page 709
- Connecting a Fiber-Optic Cable to a QFX Series Device on page 712

Fan Module LED on a QFX5100 Device

Figure 326 on page 744 shows the location of the LED next to the fan module.

Figure 326: Fan Module LED in a QFX5100 Switch

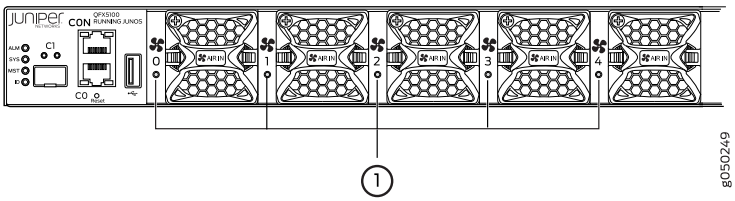

1— Fan LED	

Table 176 on page 745 describes the function of the fan tray LED.

Copyright © 2018, Juniper Networks, Inc.

Table 176: Fan Tray LED in a QFX5100 Switch

Name	Color	State	Description
Fan	Green	On steadily	The fan module is operating normally. The system has verified that the module is engaged, that the airflow is in the correct direction, and that the fan is operating correctly.
	Amber	Blinking	An error has been detected in the fan module. Replace the fan module as soon as possible. Either the fan has failed or it is seated incorrectly. To maintain proper airflow through the chassis, leave the fan module installed in the chassis until you are ready to replace it.

Related Documentation

- Cooling System and Airflow in a QFX5100 Device on page 88
- Installing a Fan Module in a QFX5100 Device on page 677
- Removing a Fan Module from a QFX5100 Device on page 675

AC Power Supply LEDs on a QFX5100 Device

Figure 327 on page 745 shows the location of the LEDs on the power supply.

Figure 327: AC Power Supply LEDs on a QFX5100 Switch

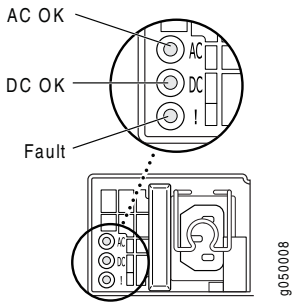

Table 177 on page 745 describes the LEDs on the AC power supplies.

Table 177: AC Power Supply LEDs on a QFX5100 Switch

LED	Color	State	Description
AC OK	Unlit	Off	The power supply is disconnected from power, or power is not coming into the power supply.
	Green	On steadily	Power is coming into the power supply.

Table 177: AC Power Supply LEDs on a QFX5100 Switch (continued)

LED	Color	State	Description
DC OK	Unlit	Off	The power supply is disconnected from power, or the power supply is not sending out power correctly.
	Green	On steadily	The power supply is sending out power correctly.
Fault	Amber	On steadily	An error has been detected in the power supply. Replace the power supply as soon as possible. To maintain proper airflow through the chassis, leave the power supply installed in the chassis until you are ready to replace it.

NOTE: If the AC OK LED and the DC OK LED are unlit, either the AC power cord is not installed properly or the power supply fuse has failed. If the AC OK LED is lit and the DC OK LED is unlit, the AC power supply is installed properly, but the power supply has an internal failure.

Related Documentation

- AC Power Supply for a QFX5100 Device on page 94
- Connecting AC Power to a QFX5100 Device on page 443

DC Power Supply LEDs on a QFX5100 Device

Figure 328 on page 746 shows the location of the LEDs on the DC power supply.

Figure 328: DC Power Supply Faceplate on a QFX5100 Switch

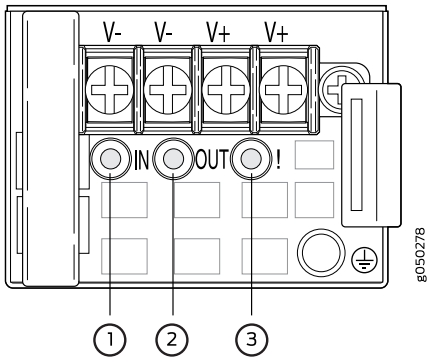

1—Input LED	3—Fault LED
2—Output LED	

CAUTION: The V+ terminals are shunted internally together, as are the V- terminals. The same polarity terminal can be wired together from the same

Copyright © 2018, Juniper Networks, Inc.

source to provide an additional current path in a higher power chassis. Do not connect the terminals to different sources.

Table 178 on page 747 describes the LEDs on the DC power supplies.

Table 178: DC Power Supply LEDs on a QFX5100 Switch

Name	Color	State	Description
Input	Unlit	Off	The power supply is disconnected from power, or power is not coming into the power supply.
	Green	On steadily	Power is coming into the power supply.
Output	Unlit	Off	The power supply is disconnected from power, or the power supply is not sending out power correctly.
	Green	On steadily	The power supply is sending out power correctly.
Fault	Amber	On steadily	An error has been detected in the power supply. Replace the power supply as soon as possible. To maintain proper airflow through the chassis, leave the power supply installed in the chassis until you are ready to replace it.

Related Documentation

- DC Power Supply in a QFX5100 Device on page 96
- DC Power Specifications for a QFX5100 Device on page 293
- Connecting DC Power to a QFX5100 Device on page 446

Copyright © 2018, Juniper Networks, Inc.

Copyright © 2018, Juniper Networks, Inc.

CHAPTER 52

Viewing QFX3600 System Information

- Chassis Status LEDs in the QFX3600 and QFX3600-I Device on page 749
- Management Port LEDs in the QFX3600 and QFX3600-I Device on page 750
- Access Port and Uplink Port LEDs on a QFX3600 or QFX3600-I Device on page 751
- Fan Tray LED on a QFX3600 or QFX3600-I Device on page 753
- AC Power Supply LEDs on a QFX3500, QFX3600, or QFX3600-I Device on page 753
- DC Power Supply LEDs on a QFX3500, QFX3600, or QFX3600-I Device on page 754

Chassis Status LEDs in the QFX3600 and QFX3600-I Device

The front panel of the QFX3600 and QFX3600-I device has three LEDs on the right side of the management board, next to the LCD panel (see Figure 329 on page 749).

Figure 329: Chassis Status LEDs in the QFX3600 and QFX3600-I Device

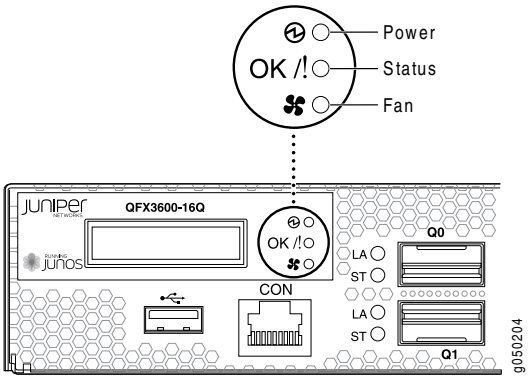

Table 179 on page 750 describes the chassis status LEDs in a QFX3600 and QFX3600-I device, their colors and states, and the status they indicate. You can view the colors of the three LEDs remotely through the CLI by issuing the operational mode command **show chassis lcd**.

Table 179: Chassis Status LEDs in the QFX3600 and QFX3600-I Device

Name	Color	State	Description
Power	Green	On steadily	The device is powered on.
	Amber	Blinking	A temperature or voltage error has been detected, and the device has shut down. Power off the QFX3600 or QFX3600-I device following the instructions in *Powering Off a QFX3600 Device*. Correct any site temperature issues, and allow the device to cool down. Power on the QFX3600 or QFX3600-I device and monitor the power supply and fan LEDs to help determine where the error is occurring. If the amber Power LED begins blinking again, power off the QFX3600 or QFX3600-I device and contact customer support. See "Contacting Customer Support to Obtain a Return Materials Authorization for a QFX Series Device or Component" on page 895.
Status	Green	On steadily	Junos OS has been loaded on the device.
		Intermittent blinking	The beacon feature has been enabled on the device using the **request chassis beacon** command.
	Amber	Blinking	A software error has occurred. Power off the QFX3600 or QFX3600-I device by following the instructions in *Powering Off a QFX3600 Device*. Power on the QFX3600 or QFX3600-I device and monitor the management board LEDs to ensure that Junos OS boots properly.
Fan	Green	On steadily	The fan trays are operating normally.
	Amber	Blinking	An error has been detected in a fan tray installed on the rear panel of the device. Replace the fan tray as soon as possible. To maintain proper airflow through the chassis leave the fan tray installed in the chassis, until you are ready to replace it.

Related Documentation

- Front Panel of a QFX3600 Device on page 104
- *Front Panel of a QFX3600-I Interconnect Device*
- Rear Panel of QFX3600 and QFX3600-I Devices on page 106
- Chassis Alarm Messages on a QFX3500 Device on page 905

Management Port LEDs in the QFX3600 and QFX3600-I Device

The RJ-45 management ports labeled **C0** and **C1** and SFP management ports labeled **C0S** and **C1S** in a QFX3600 or QFX3600-I device have two LEDs that indicate link speed and activity.

NOTE: On the SFP management ports, LA denotes activity, and ST denotes speed.

Copyright © 2018, Juniper Networks, Inc.

Figure 330: LEDs on the Management Ports on a QFX3600 or QFX3600-I Device

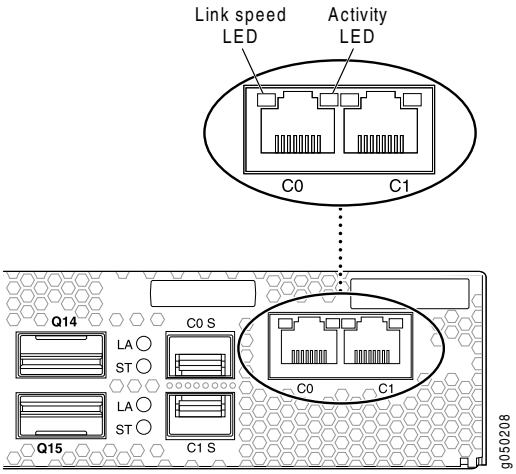

Table 180 on page 751 describes the management port LEDs.

Table 180: Management Port LEDs in a QFX3600 or QFX3600-I Device

LED	Color	State	Description
Link speed	Unlit	Off	The port is not active.
	Green	On steadily	1-Gbps link is established.
	Amber	On steadily	10/100-Mbps link is established. NOTE: The SFP management ports (**C0S** and **C1S**) do not support 10-Mbps or 100-Mbps speeds.
Activity	Unlit	Off	There is no activity on the link.
	Green	Flickering	There is activity on the link.

Related Documentation

- Front Panel of a QFX3600 Device on page 104
- *Front Panel of a QFX3600-I Interconnect Device*
- *Connecting a QFX3600 Device to a Network for Out-of-Band Management*

Access Port and Uplink Port LEDs on a QFX3600 or QFX3600-I Device

Each access port and uplink port in a QFX3600 device has two LEDs (see Figure 331 on page 752).

Figure 331: LEDs on the QSFP+ Access and Uplink Ports

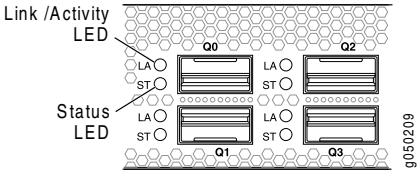

The LEDs labeled Link/Activity LED in Figure 331 on page 752 indicate link activity or faults. The LEDs labeled Status LED in Figure 331 on page 752 indicate link status.

Table 181 on page 752 describes the QSFP+ access port LEDs.

Table 181: Access Port LEDs on QSFP+ Ports on a QFX3600 Device

LED	Color	State	Description
Link/Activity	Unlit	Off	No link is established, there is a fault, or the link is down. NOTE: The LED remains unlit only if all four of the 10-Gigabit Ethernet SFP+ breakout links are down.
	Green	On steadily	A link is established, but there is no link activity. NOTE: The LED is lit green when at least one of the four 10-Gigabit Ethernet SFP+ breakout links is established.
		Blinking	A link is established, and there is link activity. NOTE: The LED is lit green when at least one of the four 10-Gigabit Ethernet SFP+ breakout links is established.
Status	Unlit	Off	No transceiver is installed in the port, or the transceiver is not supported.
	Green	On steadily	A transceiver is installed in the port.

Table 182 on page 752 describes the QSFP+ uplink port LEDs.

Table 182: Uplink Port LEDs on a QFX3600 or QFX3600-I Device

LED	Color	State	Description
Link/Activity	Unlit	Off	No link is established, there is a fault, or the link is down.
	Green	On steadily	A link is established, but there is no link activity.
		Blinking	A link is established, and there is link activity.
Status	Unlit	Off	No transceiver is installed in the port, or the transceiver is not supported.
	Green	On steadily	A transceiver is installed in the port.

Copyright © 2018, Juniper Networks, Inc.

Related Documentation

- Front Panel of a QFX3600 Device on page 104
- *Front Panel of a QFX3600-I Interconnect Device*
- Installing a Transceiver in a QFX Series Device on page 709
- Connecting a Fiber-Optic Cable to a QFX Series Device on page 712

Fan Tray LED on a QFX3600 or QFX3600-I Device

Figure 332 on page 753 shows the location of the LED on the fan tray.

Figure 332: Fan Tray

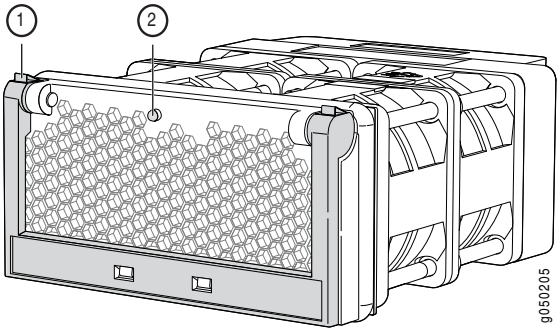

1—Handle	2—LED

Table 183 on page 753 describes the function of the fan tray LED.

Table 183: Fan Tray LED

Name	Color	State	Description
Fan	Green	On steadily	The fan tray is operating normally.
	Amber	Blinking	An error has been detected in the fan tray. Replace the fan tray as soon as possible. To maintain proper airflow through the chassis, leave the fan tray installed in the chassis until you are ready to replace it.

Related Documentation

- Cooling System and Airflow for QFX3600 and QFX3600-I Devices on page 107
- Installing a Fan Tray in a QFX3600 or QFX3600-I Device on page 663
- Removing a Fan Tray from a QFX3600 or QFX3600-I Device on page 662

AC Power Supply LEDs on a QFX3500, QFX3600, or QFX3600-I Device

Figure 333 on page 754 shows the location of the LEDs on the power supply.

Figure 333: AC Power Supply LEDs on a QFX3500, QFX3600, or QFX3600-I Device

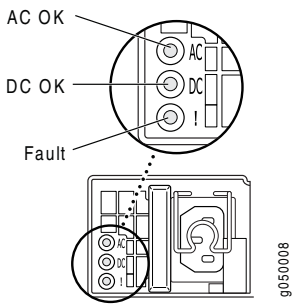

Table 184 on page 754 describes the LEDs on the AC power supplies.

Table 184: AC Power Supply LEDs on a QFX3500, QFX3600, or QFX3600-I Device

LED	Color	State	Description
AC OK	Unlit	Off	The power supply is disconnected from power, or power is not coming into the power supply.
	Green	On steadily	Power is coming into the power supply.
DC OK	Unlit	Off	The power supply is disconnected from power, or the power supply is not sending out power correctly.
	Green	On steadily	The power supply is sending out power correctly.
Fault	Amber	On steadily	An error has been detected in the power supply. Replace the power supply as soon as possible. To maintain proper airflow through the chassis, leave the power supply installed in the chassis until you are ready to replace it.

NOTE: If the AC OK LED and the DC OK LED are unlit, either the AC power cord is not installed properly or the power supply fuse has failed. If the AC OK LED is lit and the DC OK LED is unlit, the AC power supply is installed properly, but the power supply has an internal failure.

Related Documentation

- AC Power Supply for a QFX3500, QFX3600, or QFX3600-I Device on page 110
- Connecting AC Power to a QFX3500, QFX3600, or QFX3600-I Device on page 463

DC Power Supply LEDs on a QFX3500, QFX3600, or QFX3600-I Device

Figure 334 on page 755 shows the location of the LEDs on the DC power supply.

Copyright © 2018, Juniper Networks, Inc.

Figure 334: DC Power Supply Faceplate on a QFX3500, QFX3600, or QFX3600-I Device

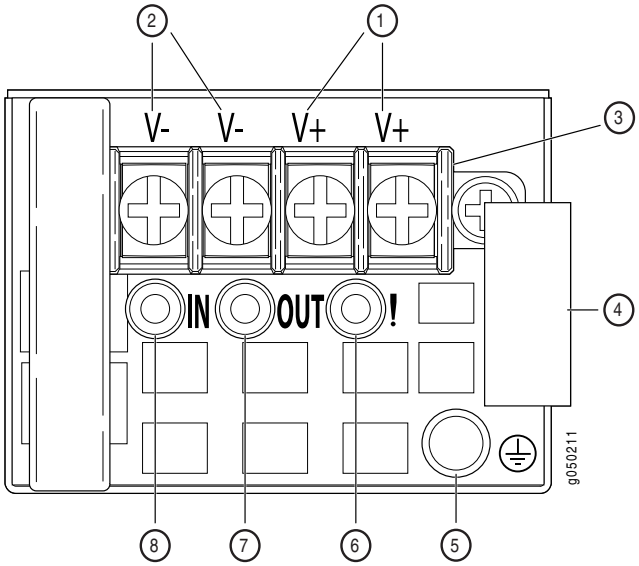

1—Shunt positive input terminals	5—ESD grounding point
2—Shunt negative input terminals	6—Fault LED
3—Terminal block	7—Output LED
4—Ejector lever	8—Input LED

CAUTION: The V+ terminals are shunted internally together, as are the V- terminals. The same polarity terminal can be wired together from the same source to provide an additional current path in a higher power chassis. Do not connect the terminals to different sources.

Table 185 on page 755 describes the LEDs on the DC power supplies.

Table 185: DC Power Supply LEDs on a QFX3500, QFX3600, or QFX3600-I Device

Name	Color	State	Description
Input	Unlit	Off	The power supply is disconnected from power, or power is not coming into the power supply.
	Green	On steadily	Power is coming into the power supply.
Output	Unlit	Off	The power supply is disconnected from power, or the power supply is not sending out power correctly.
	Green	On steadily	The power supply is sending out power correctly.

Table 185: DC Power Supply LEDs on a QFX3500, QFX3600, or QFX3600-I Device (continued)

Name	Color	State	Description
Fault	Amber	On steadily	An error has been detected in the power supply. Replace the power supply as soon as possible. To maintain proper airflow through the chassis, leave the power supply installed in the chassis until you are ready to replace it.

Related Documentation

- DC Power Supply for a QFX3500, QFX3600, or QFX3600-I Device on page 112
- Connecting DC Power to a QFX3500, QFX3600, or QFX3600-I Device on page 466

Copyright © 2018, Juniper Networks, Inc.

CHAPTER 53

Viewing QFX3500 System Information

- Chassis Status LEDs on a QFX3500 Device on page 757
- Management Port LEDs on a QFX3500 Device on page 758
- Access Port and Uplink Port LEDs on a QFX3500 Device on page 759
- Fan Tray LED on a QFX3500 Device on page 761
- AC Power Supply LEDs on a QFX3500, QFX3600, or QFX3600-I Device on page 762
- DC Power Supply LEDs on a QFX3500, QFX3600, or QFX3600-I Device on page 763

Chassis Status LEDs on a QFX3500 Device

The front panel of the QFX3500 device has three LEDs on the right side of the management board, next to the LCD panel (see Figure 335 on page 757).

Figure 335: Chassis Status LEDs on a QFX3500 Device

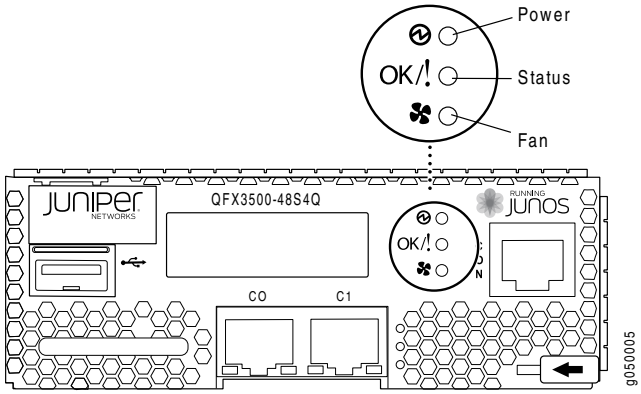

Table 186 on page 758 describes the chassis status LEDs on a QFX3500 device, their colors and states, and the status they indicate. You can view the colors of the three LEDs remotely through the CLI by issuing the operational mode command **show chassis lcd**.

Table 186: Chassis Status LEDs on a QFX3500 Device

Name	Color	State	Description
Power	Green	On steadily	The device is powered on.
	Amber	Blinking	A temperature or voltage error has been detected, and the device has shut down. Power off the QFX3500 device by setting the AC power source outlet to the OFF (O) position, or unplugging the AC power cords. Correct any site temperature issues, and allow the device to cool down. Power on the QFX3500 device and monitor the power supply and fan LEDs to help determine where the error is occurring. If the amber Power LED begins blinking again, power off the QFX3500 device and contact customer support. See "Contacting Customer Support to Obtain a Return Materials Authorization for a QFX Series Device or Component" on page 895.
Status	Green	On steadily	Junos OS has been loaded on the device.
		Intermittent blinking	The beacon feature has been enabled on the device using the **request chassis beacon** command.
	Amber	Blinking	A software error has occurred. Power off the QFX3500 device by setting the AC power source outlet to the OFF (O) position, or unplugging the AC power cords. Power on the QFX3500 device and monitor the management board LEDs to ensure that Junos OS boots properly.
Fan	Green	On steadily	The fan modules on the management board are operating normally.
	Amber	Blinking	An error has been detected in the fan modules installed on the management board. Replace the management board as soon as possible. You must power off the QFX3500 device before replacing the management board. See "Removing a Management Board from a QFX3500 Device" on page 654.

Related Documentation

- Front Panel of a QFX3500 Device on page 122
- Chassis Alarm Messages on a QFX3500 Device on page 905

Management Port LEDs on a QFX3500 Device

The management ports (labeled **C0** and **C1**) on a QFX3500 device have two LEDs that indicate link speed and activity (see Figure 336 on page 759).

NOTE: Figure 336 on page 759 depicts the 1000BASE-T management ports. The LEDs on the SFP management ports are identical.

Copyright © 2018, Juniper Networks, Inc.

Figure 336: Management Port LEDs on a QFX3500 Device

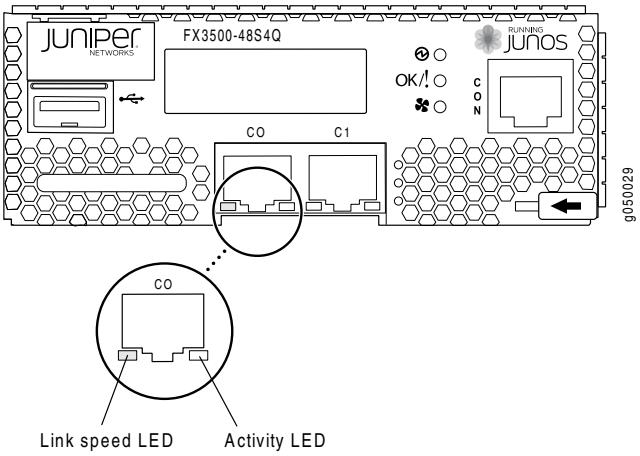

Table 187 on page 759 describes the management port LEDs.

Table 187: Management Port LEDs on a QFX3500 Device

LED	Color	State	Description
Link speed	Unlit	Off	The port is not active.
	Green	On steadily	1-Gbps link is established.
	Amber	On steadily	10/100-Mbps link is established.
Activity	Unlit	Off	There is no activity on the link.
	Green	Flickering	There is activity on the link.

Related Documentation

- Front Panel of a QFX3500 Device on page 122
- *Connecting a Device to a Network for Out-of-Band Management*

Access Port and Uplink Port LEDs on a QFX3500 Device

Each access port and uplink port on a QFX3500 device has two LEDs. The two figures in this topic show the location of those LEDs:

- Figure 337 on page 760 shows the location of the LEDs on the SFP+ access ports.
- Figure 338 on page 760 shows the location of the LEDs on the QSFP+ uplink ports.

Figure 337: LEDs on the SFP+ Access Ports

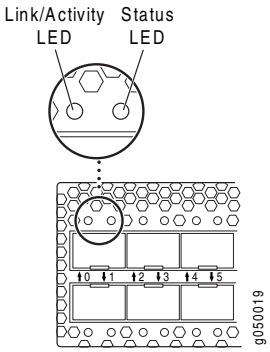

Figure 338: LEDs on the QSFP+ Uplink Ports

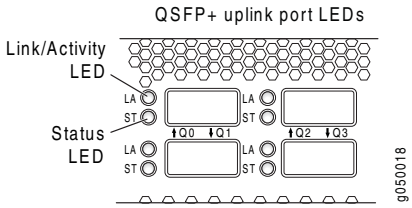

The LEDs labeled Link/Activity LED in Figure 337 on page 760 and Figure 338 on page 760 indicate link activity or faults. The LEDs labeled Status LED in Figure 337 on page 760 and Figure 338 on page 760 indicate link status.

TIP: By default, all access ports are configured as Ethernet interfaces. If you insert a Fibre Channel transceiver, the LEDs do not light until you configure the port as a Fibre Channel interface in Junos OS. Likewise, the LEDs do not light if you insert an Ethernet transceiver in a port configured as a Fibre Channel interface.

Table 188 on page 760 describes the SFP+ access port LEDs.

Table 188: Network Port LEDs on SFP+ Access Ports on a QFX3500 Device

LED	Color	State	Description
Link/Activity	Unlit	Off	No link is established, there is a fault, or the link is down.
	Green	On steadily	A link is established, but there is no link activity.
		Blinking	A link is established, and there is link activity.
Status	Unlit	Off	No transceiver is installed in the port, the port is configured for a different interface, or the transceiver is not supported.
	Green	On steadily	An Ethernet transceiver is installed in the port.
	Amber	On steadily	A Fibre Channel transceiver is installed in the port.

Copyright © 2018, Juniper Networks, Inc.

Table 189 on page 761 describes the QSFP+ uplink port LEDs.

Table 189: Uplink Port LEDs on QSFP+ Uplink Ports on a QFX3500 Device

LED	Color	State	Description
Link/Activity	Unlit	Off	No link is established, there is a fault, or the link is down. NOTE: The LED remains unlit only if all four of the 10-Gigabit Ethernet SFP+ breakout links are down.
	Green	On steadily	A link is established, but there is no link activity. NOTE: The LED is lit green when at least one of the four 10-Gigabit Ethernet SFP+ breakout links is established.
		Blinking	A link is established, and there is link activity. NOTE: The LED is lit green when at least one of the four 10-Gigabit Ethernet SFP+ breakout links is established.
Status	Unlit	Off	No transceiver is installed in the port, or the transceiver is not supported.
	Green	On steadily	A transceiver is installed in the port.

Related Documentation

- Rear Panel of a QFX3500 Device on page 123
- Installing a Transceiver in a QFX Series Device on page 709
- Connecting a Fiber-Optic Cable to a QFX Series Device on page 712

Fan Tray LED on a QFX3500 Device

Figure 339 on page 761 shows the location of the LED on the fan tray.

Figure 339: Fan Tray LED in a QFX3500 Device

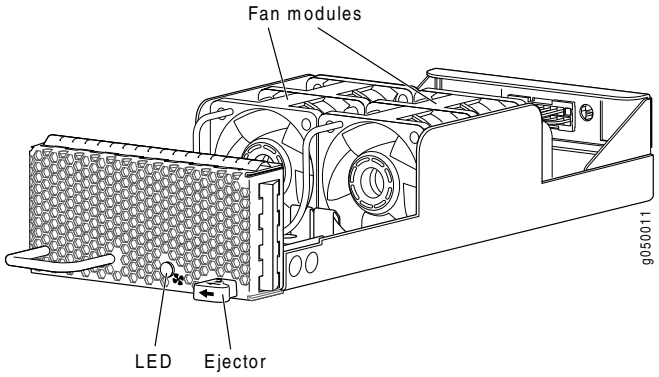

Table 176 on page 745 describes the function of the fan tray LED.

Table 190: Fan Tray LED in a QFX3500 Device

Name	Color	State	Description
Fan	Green	On steadily	The fan tray is operating normally.
	Amber	Blinking	An error has been detected in the fan tray. Replace the fan tray as soon as possible. To maintain proper airflow through the chassis, leave the fan tray installed in the chassis until you are ready to replace it.

Related Documentation

- Cooling System and Airflow for a QFX3500 Device on page 124
- Installing a Fan Tray in a QFX3500 Device on page 649
- Removing a Fan Tray from a QFX3500 Device on page 651

AC Power Supply LEDs on a QFX3500, QFX3600, or QFX3600-I Device

Figure 333 on page 754 shows the location of the LEDs on the power supply.

Figure 340: AC Power Supply LEDs on a QFX3500, QFX3600, or QFX3600-I Device

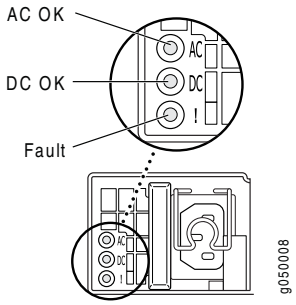

Table 184 on page 754 describes the LEDs on the AC power supplies.

Table 191: AC Power Supply LEDs on a QFX3500, QFX3600, or QFX3600-I Device

LED	Color	State	Description
AC OK	Unlit	Off	The power supply is disconnected from power, or power is not coming into the power supply.
	Green	On steadily	Power is coming into the power supply.
DC OK	Unlit	Off	The power supply is disconnected from power, or the power supply is not sending out power correctly.
	Green	On steadily	The power supply is sending out power correctly.
Fault	Amber	On steadily	An error has been detected in the power supply. Replace the power supply as soon as possible. To maintain proper airflow through the chassis, leave the power supply installed in the chassis until you are ready to replace it.

Copyright © 2018, Juniper Networks, Inc.

NOTE: If the AC OK LED and the DC OK LED are unlit, either the AC power cord is not installed properly or the power supply fuse has failed. If the AC OK LED is lit and the DC OK LED is unlit, the AC power supply is installed properly, but the power supply has an internal failure.

Related Documentation

- AC Power Supply for a QFX3500, QFX3600, or QFX3600-I Device on page 110
- Connecting AC Power to a QFX3500, QFX3600, or QFX3600-I Device on page 463

DC Power Supply LEDs on a QFX3500, QFX3600, or QFX3600-I Device

Figure 334 on page 755 shows the location of the LEDs on the DC power supply.

Figure 341: DC Power Supply Faceplate on a QFX3500, QFX3600, or QFX3600-I Device

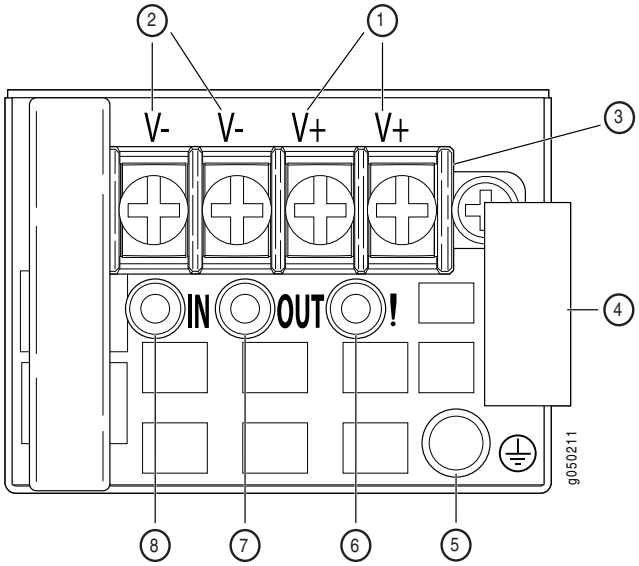

1—Shunt positive input terminals	5—ESD grounding point
2—Shunt negative input terminals	6—Fault LED
3—Terminal block	7—Output LED
4—Ejector lever	8—Input LED

CAUTION: The V+ terminals are shunted internally together, as are the V- terminals. The same polarity terminal can be wired together from the same source to provide an additional current path in a higher power chassis. Do not connect the terminals to different sources.

Table 185 on page 755 describes the LEDs on the DC power supplies.

Table 192: DC Power Supply LEDs on a QFX3500, QFX3600, or QFX3600-I Device

Name	Color	State	Description
Input	Unlit	Off	The power supply is disconnected from power, or power is not coming into the power supply.
	Green	On steadily	Power is coming into the power supply.
Output	Unlit	Off	The power supply is disconnected from power, or the power supply is not sending out power correctly.
	Green	On steadily	The power supply is sending out power correctly.
Fault	Amber	On steadily	An error has been detected in the power supply. Replace the power supply as soon as possible. To maintain proper airflow through the chassis, leave the power supply installed in the chassis until you are ready to replace it.

Related Documentation

- DC Power Supply for a QFX3500, QFX3600, or QFX3600-I Device on page 112
- Connecting DC Power to a QFX3500, QFX3600, or QFX3600-I Device on page 466

Copyright © 2018, Juniper Networks, Inc.

CHAPTER 54

Viewing EX4300 System Information

- LCD Panel in EX4300 Switches on page 765
- Chassis Status LEDs on EX4300 Switches on page 769
- Management Port LEDs on EX4300 Switches on page 772
- Network Port, Built-In QSFP+ Port, Uplink Port, and Uplink Module Port LEDs on EX4300 Switches on page 773
- AC Power Supply LEDs in EX4300 Switches on page 778
- DC Power Supply LEDs in EX4300 Switches on page 779
- Dashboard for EX Series Switches on page 780

LCD Panel in EX4300 Switches

The LCD panel on the front panel of the EX4300 switches except EX4300-48MP and EX4300-48MP-S switches shows two lines of text, each with a maximum of 16 characters. The LCD panel displays a variety of information about the switch and also provides a menu to perform basic operations such as initial setup and reboot.

NOTE: **There is no LCD panel on EX4300-48MP and EX4300-48MP-S switches.**

There are two navigation buttons—Menu and Enter—to the right of the LCD panel.

See Figure 342 on page 765.

Figure 342: LCD Panel in EX4300 Switches

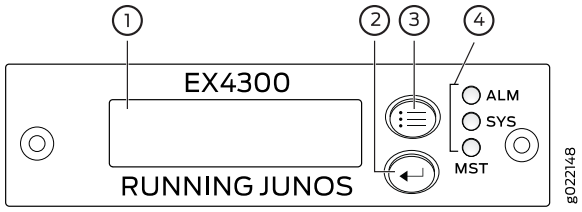

1—LCD panel	3—LCD panel Menu button
2—LCD panel Enter button	4—Chassis status LEDs

The first line of text on the LCD panel displays basic information about the switch and the second line of text displays information about the mode selected on the LCD panel. You can configure the second line of the text for the LCD panel to display a custom message. If the LCD panel is configured to display a custom message, the Menu button and the Enter button are disabled. See *Configuring the LCD Panel on EX Series Switches (CLI Procedure)*.

The LCD panel has a backlight. If the LCD panel is idle for 60 seconds, the backlight turns off. You can turn on the backlight by pressing the Menu or Enter button once. After turning on the backlight, you can toggle between the LCD panel menus by pressing the Menu button and navigate through the menu options by pressing the Enter button.

NOTE: **The chassis viewer in the J-Web interface also displays the LCD panel. From the J-Web interface, you can view real-time status information in the LCD panel. See** "Dashboard for EX Series Switches" on page 780.

- LCD Panel Modes on page 766
- LCD Panel Menus on page 767

LCD Panel Modes

The LCD panel operates in four modes: boot, idle, status, and maintenance.

The first line of text on the LCD panel displays the slot number, the role of the switch, and hostname in all the modes.

For a standalone EX4300 switch, by default the slot number is **00**, and the role is **RE**.

In an EX4300 switch that is a member of a Virtual Chassis, the first line of the LCD panel always displays:

- The slot number (the member ID of the Virtual Chassis member)
- Role of the switch in the Virtual Chassis (**RE** for master, **BK** for backup, and **LC** for line card member)
- Hostname

The LCD panel operates in boot mode during switch reboot. In the boot mode, the second line of the LCD panel displays the key milestones in the switch boot process. The boot mode does not have any menu options. After the boot process is complete, the LCD panel automatically reverts to the Idle (**IDLE**) menu.

In idle mode, the second line of text on the LCD panel displays the mode of the network ports' Status LED and the number of chassis alarms. The number of alarms is updated every second.

In status mode, the second line displays:

- Status of the Virtual Chassis port (VCP)
- Status of the power supplies

 Copyright © 2018, Juniper Networks, Inc.

- Status of the fan modules and the chassis temperature
- Version of Junos OS for EX Series switches loaded on the switch

In maintenance mode, the second line displays one of the following options, which you can use to configure and troubleshoot the switch:

- System halt
- System reboot
- Load rescue
- Request VC port
- Factory default
- EZSetup

LCD Panel Menus

The LCD panel has three menus: Idle, Status, and Maintenance. You can toggle between the LCD panel menus by pressing the Menu button and navigate through the menu options by pressing the Enter button.

Table 193 on page 767 describes the LCD panel menu options.

Table 193: LCD Panel Menu Options in EX4300 Switches

Menu Label	Description

IDLE	In the Idle menu:
	• Press Enter to cycle through the Status LED modes, which are port status indicators:
	  ◦ ADM (administrative status)
	  ◦ DPX (duplex)
	  ◦ SPD (speed)
	  ◦ POE (Power over Ethernet) (only for EX4300-24P, EX4300-24P-S, EX4300-48P, and EX4300-48P-S models)
	  See "Network Port, Built-In QSFP+ Port, Uplink Port, and Uplink Module Port LEDs on EX4300 Switches" on page 773 for information about the Status LED modes.
	• Press Menu to exit the Idle menu and go to the Status menu.

Table 193: LCD Panel Menu Options in EX4300 Switches (continued)

Menu Label	Description

STATUS	In the Status menu, press Menu to cycle through the following information:
	• VCPs status: Up or Down
	Display the status of VCPs on the switch. This option is supported only on EX4300 switches in a Virtual Chassis configuration. This option is not supported on standalone EX4300 switches.
	• Power supply status: OK, Failed, or Absent
	• Fan status and Temperature status.
	  ◦ Fan status: OK, Failed, or Absent
	  ◦ Temp status: OK, High, or Shutdown
	• Junos OS version for EX Series switches loaded on the switches.
	• EXIT STAT MENU?
	Choose one of the following:
	  ◦ Press Enter to exit the Status menu and go to the Maintenance menu.
	  ◦ Press Menu to display the VCPs status again.
	You can disable the Status menu or the options in the Status menu in the LCD panel. See *Configuring the LCD Panel on EX Series Switches (CLI Procedure)*.

Copyright © 2018, Juniper Networks, Inc.

Table 193: LCD Panel Menu Options in EX4300 Switches (continued)

Menu Label	Description
MAINT (Maintenance Menu)	The Maintenance menu has the following options to configure and troubleshoot the switch: • SYSTEM HALT?—Choose one of the following: ◦ Press Enter to halt the switch. Press Enter again to confirm the halt. ◦ Press Menu to go to the next option in the Maintenance menu. • SYSTEM REBOOT?—Choose one of the following: ◦ Press Enter to reboot the switch. Press Enter again to confirm the reboot. ◦ Press Menu to go to the next option in the Maintenance menu. • LOAD RESCUE?—Choose one of the following: ◦ Press Enter to roll back the switch to the previous valid configuration. Press Enter again to confirm the rollback. ◦ Press Menu to go to the next option in the Maintenance menu. • REQUEST VC PORT?—Choose one of the following: ◦ Press the Enter button to configure an uplink module port or a built-in QSFP+ port to be a VCP or to delete a VCP from the switch configuration (when you delete the VCP, the port is reset to be an uplink module port or a network port). ◦ Press the Menu button to go to the next option in the Maintenance menu. • FACTORY DEFAULT?—Choose one of the following: ◦ Press Enter to restore the switch to the factory default configuration. Press Enter again to confirm the restoration. The LCD panel flashes a success or failure message, after which it displays the Idle menu. ◦ Press Menu to go to the next option in the Maintenance menu. • ENTER EZSETUP?—Choose one of the following: ◦ Press Enter to launch EZSetup. Press Enter again to confirm the launch. EZSetup configures DHCP and enables the J-Web user interface on the switch. The LCD panel flashes a success or failure message for approximately 10 seconds, after which it displays the Idle menu. NOTE: You can use EZSetup only on a standalone switch that is in the factory default configuration. For information about EZSetup, see *Connecting and Configuring an EX Series Switch (J-Web Procedure)*. ◦ Press Menu to go to the next option in the Maintenance menu. • EXIT MAINT MENU?—Choose one of the following: ◦ Press Enter to exit the Maintenance menu. ◦ Press Menu to return to the SYSTEM HALT? option. You can disable the Maintenance menu or the options in the Maintenance menu in the LCD panel. See *Configuring the LCD Panel on EX Series Switches (CLI Procedure)*.

Related Documentation

- EX4300 Switches Hardware Overview on page 137
- *Connecting and Configuring an EX Series Switch (CLI Procedure)*

Chassis Status LEDs on EX4300 Switches

EX4300 switches except EX4300-48MP and EX4300-48MP-S switches have three chassis status LEDs (labeled **ALM**, **SYS**, and **MST**) on the right of the LCD panel, next to the Menu and Enter buttons (see Figure 343 on page 770). EX4300-48MP and

EX4300-48MP-S switches have three chassis status LEDs (labeled **ALM**, **SYS**, and **MST**) on the right of the front panel (see Figure 344 on page 770).

Figure 343: Chassis Status LEDs in EX4300 Switches Except EX4300-48MP and EX4300-48MP-S Switches

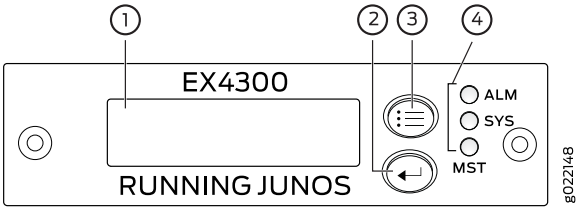

1—LCD panel	3—LCD panel Menu button
2—LCD panel Enter button	4—Chassis status LEDs

Figure 344: Chassis Status LEDs in EX4300-48MP and EX4300-48MP-S Switches

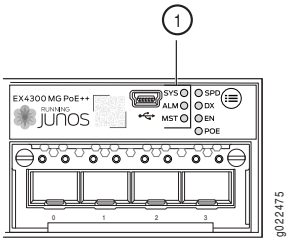

1—Chassis status LEDs	

Table 194 on page 771 describes the chassis status LEDs on an EX4300 switch, their colors and states, and the status they indicate. You can view the colors of the three LEDs remotely through the CLI by issuing the operational mode command **show chassis led**.

Copyright © 2018, Juniper Networks, Inc.

Table 194: Chassis Status LEDs on an EX4300 Switch

LED Label	Color	State and Description
ALM (Alarm)	Unlit	There is no alarm or the switch is halted.
	Red	There is a major alarm. A major alarm indicates a critical error condition that requires immediate attention. NOTE: When you connect power to the switch, the Alarm (**ALM**) LED glows red. This behavior is normal. Plugging an active Ethernet cable into the management (**MGMT**) port on the switch completes the network link and turns off the **ALM** LED. (See *Connecting a Device to a Network for Out-of-Band Management*.) Connecting the switch to a dedicated management console instead of a network does not affect the **ALM** LED. The LED remains red until the switch is connected to a network.
	Yellow	There is a minor alarm. A minor alarm indicates a noncritical condition that requires monitoring or maintenance. A minor alarm that is left unchecked might cause interruption in service or performance degradation. NOTE: The Alarm (**ALM**) LED glows yellow if you commit a configuration to make it active on the switch and do not also create a rescue configuration to back it up. To save the most recently committed configuration as the rescue configuration, enter the operational mode command **request system configuration rescue save**.
SYS (System)	Green	• On steadily—Junos OS for EX Series switches has been loaded on the switch. • Blinking (not applicable for EX4300-48MP and EX4300-48MP-S switches)—The switch is booting.
	Unlit	• EX4300 switches except EX4300-48MP and EX4300-48MP-S switches—The switch is powered off or is halted. • EX4300-48MP and EX4300-48MP-S switches—The switch is booting or the switch is powered off or is halted.
MST (Master)	Green	In a standalone EX4300 switch: • On steadily—The switch is functioning normally. • Off—The switch is powered off or is halted. In a Virtual Chassis configuration: • On steadily—The switch is the master in the Virtual Chassis configuration. • Blinking—The switch is the backup in the Virtual Chassis configuration. • Off—The switch is a line card member in the Virtual Chassis configuration or is halted.

A major alarm (red) indicates a critical error condition that requires immediate action.

A minor alarm (yellow) indicates a noncritical condition that requires monitoring or maintenance. A minor alarm that is left unchecked might cause interruption in service or performance degradation.

All three LEDs can be lit simultaneously.

Related Documentation

- *show chassis lcd*
- *Chassis Component Alarm Conditions on EX4300 Switches*
- Checking Active Alarms with the J-Web Interface on page 910
- Understanding Alarm Types and Severity Levels on EX Series Switches on page 908

Management Port LEDs on EX4300 Switches

The management port, labeled **MGMT**, on the rear panel of an EX4300 switch, has two LEDs that indicate link activity and status of the management port. Figure 345 on page 772 shows the location of Management port on a 24-port EX4300 switch. The location of the LEDs and their behavior are similar for all EX4300 switches except EX4300-48MP and EX4300-48MP-S switches. Figure 346 on page 772 shows the location of Management port on EX4300-48MP and EX4300-48MP-S Switches.

Figure 345: LEDs on the Management Port on a 24-Port EX4300 Switch

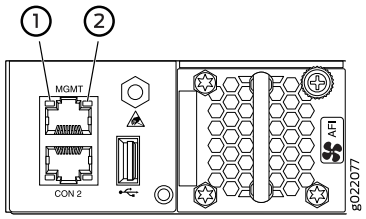

1—Link/Activity LED	2—Status LED

Figure 346: LEDs on the Management Port on EX4300-48MP and EX4300-48MP-S Switches

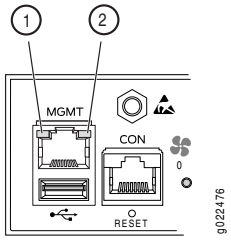

1—Link/Activity LED	2—Status LED

Table 195 on page 772 describes the Link/Activity LED.

Table 195: Link/Activity LED on the Management Port on an EX4300 Switch

LED	Color	State and Description
Link/Activity	Green	• Blinking—The port and the link are active, and there is link activity. • On steadily—The port and the link are active, but there is no link activity. • Off—The port is not active.

Copyright © 2018, Juniper Networks, Inc.

Table 196 on page 773 describes the Status LED.

Table 196: Status LED on the Management Port on an EX4300 Switch

LED	Color	State and Description

Status	Green	Indicates the speed. The speed indicators are:
		• EX4300 switches except EX4300-48MP and EX4300-48MP-S switches:
		  • Off—Link speed is 10 Mbps.
		  • Blinking—Link speed is 100 Mbps.
		  • On steadily—Link speed is 1000 Mbps.
		• EX4300-48MP and EX4300-48MP-S switches:
		  • Off—Link speed is 10 Mbps or 1000 Mbps.
		  • On steadily—Link speed is 100 Mbps.

Related Documentation

- *Connecting a Device to a Network for Out-of-Band Management*

Network Port, Built-In QSFP+ Port, Uplink Port, and Uplink Module Port LEDs on EX4300 Switches

Each 10/100/1000BASE-T network port, SFP network port, SFP+ uplink port, SFP+ uplink module port, built-in QSFP+ port, and QSFP+ uplink module port on an EX4300 switch has two LEDs that show the link activity and status of the port.

The following figures in this topic shows the location of those LEDs:

- Figure 347 on page 774 shows the location of the LEDs on the 10/100/1000BASE-T and 100/1000/2500/5000/10000BASE-T Ethernet network ports.
- Figure 348 on page 774 shows the location of the LEDs on the SFP network ports on EX4300 switches except EX4300-48MP and EX4300-48MP-S switches. There are no SFP network ports on EX4300-48MP and EX4300-48MP-S switches.
- Figure 349 on page 774 shows the location of the LEDs on the built-in QSFP+ ports.
- Figure 350 on page 774 shows the location of the LEDs on the SFP+ uplink ports and on the SFP+ports on the 4-port SFP+ uplink module on EX4300 switches except EX4300-48MP and EX4300-48MP-S switches. There is no SFP network port on EX4300-48MP and EX4300-48MP-S switches.
- Figure 351 on page 775 shows the location of the LEDs on the ports on the 4-port 10GbE uplink module on EX4300-48MP and EX4300-48MP-S switches.
- Figure 352 on page 775 shows the location of the LEDs on the QSFP+ uplink module ports on the QSFP+ uplink module on EX4300 switches except EX4300-48MP and EX4300-48MP-S switches. There is no QSFP+ uplink module supported on EX4300-48MP and EX4300-48MP-S switches.
- Figure 353 on page 775 shows the location of the LEDs on the SFP+ uplink module ports on the 8-port SFP+ uplink module on EX4300 switches except EX4300-48MP and

EX4300-48MP-S switches. There is no 8-port SFP+ uplink module supported on EX4300-48MP and EX4300-48MP-S switches.

Figure 347: LEDs on 10/100/1000BASE-T Network Ports and 100/1000/2500/5000/10000BASE-T Network Ports

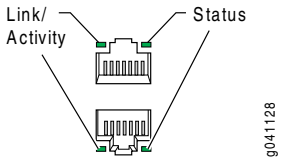

Figure 348: LEDs on the SFP Network Ports on EX4300 Switches Except EX4300-48MP and EX4300-48MP-S Switches

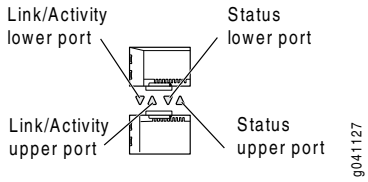

Figure 349: LEDs on the Built-In QSFP+ Ports

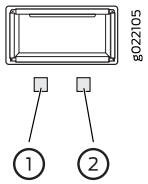

1— Link activity LED	2— Status LED

Figure 350: LEDs on the SFP+ Uplink Ports and on the 4-Port SFP+ Uplink Module on EX4300 Switches Except EX4300-48MP and EX4300-48MP-S Switches

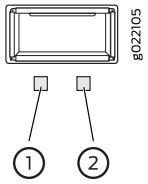

1— Link activity LED	2— Status LED

Copyright © 2018, Juniper Networks, Inc.

Figure 351: LEDs on the Ports on the 4-Port 10GbE Uplink Module on EX4300-48MP and EX4300-48MP-S Switches

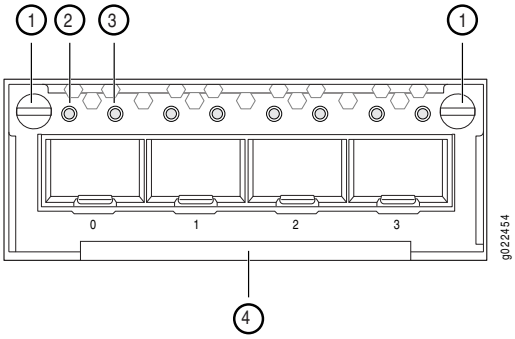

1—Captive screws of the uplink module	3—Status LED of the uplink module port
2—Link activity LED of the uplink module port	4—Handle of the uplink module

Figure 352: LEDs on the QSFP+ Uplink Module Ports on EX4300 Switches Except EX4300-48MP and EX4300-48MP-S Switches

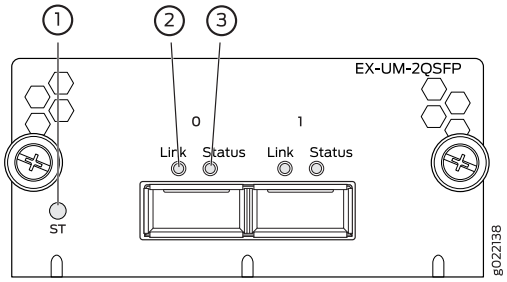

1—Status LED of the uplink module	3—Status LED of the uplink module port
2—Link activity LED of the uplink module port	

Figure 353: LEDs on the SFP+ Ports on the 8-Port SFP+ Uplink Module on EX4300 Switches Except EX4300-48MP and EX4300-48MP-S Switches

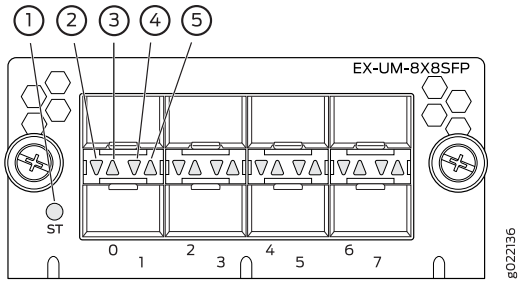

1—Status LED of the uplink module	4—Status LED the lower port
2—Link activity LED of the lower port	5—Status LED the upper port
3—Link activity LED of the upper port	

The Table 197 on page 776 describes the link activity LED on 10/100/1000BASE-T network ports, SFP network ports, SFP+ uplink ports, SFP+ uplink module ports, built-in QSFP+ ports, and QSFP+ uplink module ports.

Table 197: Link/Activity LED

LED	Color	State and Description
Link activity	Green	• Blinking—The port and the link are active, and there is link activity. • On steadily—The port and the link are active, but there is no link activity. • Off—The port is not active.

Table 198 on page 776 describes the Status LED on 10/100/1000BASE-T Ethernet network ports and SFP network ports. On EX4300 switches except EX4300-48MP and EX4300-48MP-S switches, from the Idle menu of the LCD panel, use the Enter button on the LCD panel to toggle between the ADM, DPX, SPD, and PoE+ indicators. On EX4300-48MP and EX4300-48MP-S switches, use the Factory Reset/Mode button on the far right side of the front panel to toggle the Status LED to show the different port parameters for the RJ-45 network ports. You can tell which port parameter is indicated by the Status LED by looking at which port status mode LED (SPD, DX, EN, and PoE) is lit.

Table 198: Status LED on 10/100/1000BASE-T Ethernet Network Ports and SFP Network Ports on EX4300 Switches Except EX4300-48MP and EX4300-48MP-S Switches

LED	LCD Indicator/Status Mode LED	State and Description
Status	LED: ADM/EN	Indicates the administrative status (enabled or disabled). The status indicators are: • Green—Port is administratively enabled. • Unlit—Port is administratively disabled.
	LED: DPX/DX	Indicates the duplex mode. The status indicators are: • Green—Port is set to full-duplex mode. • Unlit—Port is set to half-duplex mode. NOTE: In EX4300 switches, the ports operate in full-duplex mode only.
	LED: SPD/SPD	Indicates the speed. The speed indicators for 24-port and 48-port EX4300 switches are: • Unlit—10 Mbps • Blinking green—100 Mbps • Steadily green—1000 Mbps NOTE: In 32-port EX4300 switches, when an EX-SFP-1GE-T transceiver is installed in the port, the LED is unlit when the speed is 100 Mbps.
	LED: PoE/POE	Indicates the PoE mode. The status indicators are: • Steadily green—PoE is enabled on the port and a device is drawing power. • Blinking green—PoE is enabled on the port, but no power is drawn from the port. • Unlit—PoE is not enabled on the port.

Copyright © 2018, Juniper Networks, Inc.

Table 199 on page 777 describes the Status LED on 100/1000/2500/5000/10000BASE-T Ethernet network ports on EX4300-48MP and EX4300-48MP-S switches. Use the Factory Reset/Mode button on the far right side of the front panel to toggle the Status LED to show the different port parameters for the RJ-45 network ports. You can tell which port parameter is indicated by the Status LED by looking at which port status mode LED (SPD, DX, EN, and PoE) is lit.

Table 199: Status LED on 100/1000/2500/5000/10000BASE-T Ethernet Network Ports on EX4300-48MP and EX4300-48MP-S Switches

LED	Status Mode LED	State and Description
Status	EN	Indicates the administrative status (enabled or disabled). The status indicators are: • Green—Port is administratively enabled. • Unlit—Port is administratively disabled.
	DX	Indicates the duplex mode. The status indicators are: • Green—Port is set to full-duplex mode. • Unlit—Port is set to half-duplex mode. NOTE: In EX4300 switches, the ports operate in full-duplex mode only.
	SPD	Indicates the speed. The speed indicators for 24-port and 48-port EX4300 switches are: • Unlit—10 Mbps • Blinking green—100 Mbps • Steadily green—1000 Mbps • Blinking amber—5000 Mbps • Steadily blue—10000 Mbps NOTE: In 32-port EX4300 switches, when an EX-SFP-1GE-T transceiver is installed in the port, the LED is unlit when the speed is 100 Mbps.
	POE	Indicates the PoE mode. The status indicators are: • Steadily green—PoE is enabled on the port and a device is drawing power. • Blinking green—PoE is enabled on the port, but no power is drawn from the port. • Unlit—PoE is not enabled on the port.

Table 200 on page 777 describes the Status LED on SFP+ uplink ports and SFP+ uplink module ports on EX4300 switches except EX4300-48MP and EX4300-48MP-S switches and the SFP+ uplink module ports on EX4300-48MP and EX4300-48MP-S switches.

Table 200: Status LED on SFP+ Uplink Ports and SFP+ Uplink Module Ports

LED	LCD Indicator	State and Description
Status	Green	Indicates the speed. The speed indicators are: • Blinking green—1000 Mbps • Steadily green—10 Gbps

Copyright © 2018, Juniper Networks, Inc.

Table 201 on page 778 describes the Status LED on QSFP+ ports in EX4300 switches.

Table 201: Status LED on QSFP+ Ports

LED	LCD Indicator	State and Description
Status	Green	Indicates the status. The status indicators are: • Unlit—40-Gigabit port is down. • Steadily green—40-Gigabit port is up.

Related Documentation

- *Uplink Modules in EX4300 Switches*
- EX4300 Switches Hardware Overview on page 137

AC Power Supply LEDs in EX4300 Switches

Figure 354 on page 778 shows the location of the LEDs on an AC power supply for EX4300 switches except EX4300-48MP and EX4300-48MP-S switches.

Figure 354: LEDs on AC Power Supply for EX4300 Switches

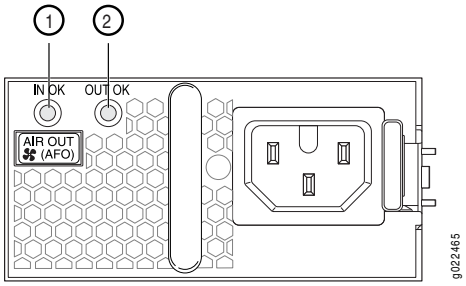

1—IN OK LED	2—OUT OK LED

Table 202 on page 778 describes the AC power supply LEDs.

Table 202: AC Power Supply LEDs in EX4300 Switches

LED	Color	Description
IN OK	Unlit	Indicates one of the following: • AC power input voltage is not within normal operating range. • No AC power input.
	Green	Power supply is receiving proper input power and is functioning normally.

Copyright © 2018, Juniper Networks, Inc.

Table 202: AC Power Supply LEDs in EX4300 Switches (continued)

LED	Color	Description
OUT OK	Unlit	Indicates one of the following: • **IN OK** LED is unlit. • The power supply is not delivering power correctly.
	Green	The power supply is delivering power and is functioning correctly.
	Red	The power supply has failed and must be replaced.

NOTE: If the **IN OK** LED and the **OUT OK** LED are not lit green, either the AC power cord is not installed properly or the power input voltage is not within normal operating range.

If the **IN OK** LED is lit green and the **OUT OK** LED is unlit or lit red, the AC power supply is installed properly, but the power supply has an internal failure.

DC Power Supply LEDs in EX4300 Switches

Figure 355 on page 779 shows the location of the LEDs on a DC power supply for an EX4300 switch.

Figure 355: DC Power Supply Faceplate on an EX4300 Switch

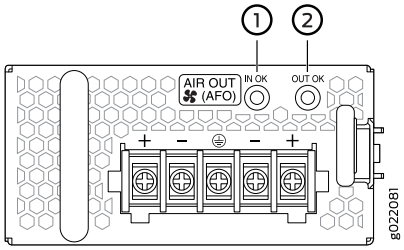

1—IN OK LED	2—OUT OK LED

Table 203 on page 779 describes the LEDs on the DC power supplies.

Table 203: DC Power Supply LEDs on an EX4300 Switch

Name	Color	Description
IN OK	Unlit	Indicates one of the following: • Power supply is disconnected from DC power feed. • DC power input voltage is not within normal operating range. • No DC power input.
	Green	The power supply is receiving power.

Table 203: DC Power Supply LEDs on an EX4300 Switch (continued)

Name	Color	Description
OUT OK	Unlit	Indicates one of the following: • **IN OK** LED is unlit. • The power supply is not delivering power correctly.
	Green	The power supply is functioning correctly.
	Red	The power supply has failed and must be replaced.

Dashboard for EX Series Switches

NOTE: This topic applies only to the J-Web Application package.

When you log in to the J-Web user interface, the dashboard for the Juniper Networks EX Series Ethernet Switches appears. Use the dashboard to view system information.

The Update Available window appears if there is a latest update of the J-Web Application package available on the Juniper Networks server. This window is enabled by the auto update feature of J-Web.

NOTE:

- The Update Available window will *not* appear when you log in, if you have not selected the **Check for updates automatically on every login** in the *Update Preference* section in the **Maintain** > **Update J-Web** side pane. By default, the *Check for update automatically on every login* is selected.
- If you choose *Update Later*, you can update to the latest J-Web Application package by clicking the orange icon next to *Update Available* on the top pane of the J-Web interface or through **Maintain** > **Update J-Web**.

The dashboard comprises a graphical chassis viewer and four panels.

- Graphical Chassis Viewer on page 781
- System Information Panel on page 782
- Health Status Panel on page 784
- Capacity Utilization Panel on page 786
- Alarms Panel on page 786
- File System Usage on page 787
- Chassis Viewer on page 787

Copyright © 2018, Juniper Networks, Inc.

Graphical Chassis Viewer

The Dashboard panel displays a graphical view of the chassis of a switch. In a Virtual Chassis, it displays a graphical view of each member switch.

In a Virtual Chassis, the default values are shown on the Dashboard panel when no chassis image is clicked. The panel displays the value for a switch if you click its image.

NOTE: If the member switch is not present, inactive, or not provisioned, you cannot expand the member switch image.

In J-Web Application package Release 14.1X53-A2, you can form a Virtual Chassis using EX4600 and EX4300 switches. When in a mixed Virtual Chassis consisting of EX4600 switches and EX4300 switches, the EX4600 switches can be the master, backup, or in the linecard role, while the EX4300 switches must be in the linecard role.

Table 204 on page 781 lists the details that are displayed on each member switch.

Table 204: Details of a Virtual Chassis Member Switch

Details	Example
Model number of the member switch	**EX3300**
Assigned ID that applies to the entire Virtual Chassis configuration	**ID 2** NOTE: If the member switch is not provisioned, the serial number of the switch is displayed instead of its ID.
Role of the member switch	**Master** Possible roles are: **Master**, **Backup**, or **Linecard**
Status of the member switch	**Prsnt** Possible statuses are: **Prsnt**, **NotPrsnt**, **Inactive**, or **Unprvsnd**

The status of the member switch is displayed on the image of the switch. If the member switch appears dimmed, it means the switch is not present, is inactive, or is not provisioned in the Virtual Chassis. If the member switch does not appear dimmed, it means the switch is present and is active.

Table 205 on page 781 describes the possible status of a member switch.

Table 205: Status of a Member Switch in a Virtual Chassis

If the member switch is	It appears as	It means the member switch
Present	**Prsnt**	Has established physical and logical connections with Virtual Chassis member switches.

Table 205: Status of a Member Switch in a Virtual Chassis (continued)

If the member switch is	It appears as	It means the member switch
Not present	dimmed and **NotPrsnt**	Has been disconnected from the existing Virtual Chassis.
Inactive	dimmed and **Inactive**	Has established physical connections, but is unable to establish logical connections.
Not provisioned	dimmed and **Unprvsnd**	Cannot synchronize with the existing preprovisioned Virtual Chassis.

Click **Rear View** for a graphical view of the rear panel of the switch.

Click **Preferences** to choose which panels must be displayed and set the refresh interval for chassis viewer information. Click **OK** to save your changes and return to the dashboard or click **Cancel** to return to the dashboard without saving changes.

NOTE: You can drag the various panels to different locations in the J-Web window.

System Information Panel

Table 206: System Information

Field	Description
System name	Indicates the local name of the EX Series switch. The local name of the EX Series switches changes when an individual image is clicked.
Device model	Indicates the model of the EX Series switch. In a Virtual Chassis configuration, to indicate the model of a switch, click the image of that switch. NOTE: In a Virtual Chassis setup for an EX6210, EX8208, or EX8216 switch, the Device model field displays details of the master Routing Engine. To view details of a member, select it.

Copyright © 2018, Juniper Networks, Inc.

Table 206: System Information (continued)

Field	Description
Inventory details	Indicates the following: • For EX3200 switches; and for EX2200, EX2200-C, EX3300, EX4200, EX4300, EX4500, EX4550, and EX4600 switches that are not configured as Virtual Chassis, the value displayed in Inventory details field is always 1 FPC. FPC is a legacy term for a slot in a large Juniper Networks chassis; which simply refers to the standalone switch. • For EX2200 and EX2200-C switches configured as a Virtual Chassis, the value displayed in the Inventory details field is 1–4 FPC, with the number corresponding to the number of member switches. • For EX3300 switches configured as a Virtual Chassis, the value displayed in the Inventory details field is 1–6 FPC, with the number corresponding to the number of member switches. NOTE: For Junos OS Release 14.1X53-D10 and later, EX3300 switches configured as a Virtual Chassis display the value 1–10 FPC in the Inventory details field. • For EX4200, EX4500, EX4550, and EX4600 switches configured as a Virtual Chassis, the value displayed in the Inventory details field is 1–10 FPC, with the number corresponding to the number of member switches. • For EX6210 switches, the values displayed in the Inventory details field are 1–2 CB and 1–9 FPC. CB, or Control Board, refers to the SRE module. FPC refers to line cards and the FPC within the CB. • For an EX8208 switch, the values displayed in Inventory details field are 1–3 CB and 0–8 FPC. CB, or Control Board, refers to SRE and SF modules. FPC refers to line cards. • For EX8216 switches, the values displayed in Inventory details field are 1–2 CB and 0–16 FPC. CB, or Control Board, refers to RE modules and FPC refers to line cards. • For an XRE200 External Routing Engine in an EX8200 Virtual Chassis, the value displayed in Inventory details is 1 XRE. XRE refers to RE modules. For XRE200 External Routing Engines configured as a Virtual Chassis, the values displayed in Inventory details are 1–2 XRE and 0–4 LCC, where LCC refers to the EX8200 line card chassis.
Junos image	Indicates the version of the Junos OS image. In a Virtual Chassis configuration, the Junos OS image of the master switch is displayed by default. To display the Junos OS image of a specific switch, click the image of that switch.
Boot image	Indicates the version of the boot image that is used. In a Virtual Chassis configuration, the boot image of the master switch is displayed by default. To display the boot image of a specific switch, click the image of that switch.

Copyright © 2018, Juniper Networks, Inc.

Table 206: System Information (continued)

Field	Description
Device uptime	Indicates the time since the last reboot. In a Virtual Chassis configuration, to display the uptime of the specific switch, click the image of that switch.
Last configured time	Indicates the time when the switch was last configured.

Health Status Panel

Table 207: Health Status

Field	Description
EX2200, EX2200-C, EX3200, EX3300, EX4200, and EX4300 Switches	
Memory util.	Indicates the memory used in the Routing Engine. In a Virtual Chassis configuration, the memory utilization value of the master Routing Engine is displayed. NOTE: In EX4300 and EX4600 Virtual Chassis, to display the Routing Engine memory utilization of the master or backup, click the respective image. J-Web is supported on EX4600 switches only in J-Web Application package Release 14.1X53-A2.
Flash	Indicates the usage and capacity of internal flash memory and any external USB flash drive. NOTE: In EX4300 Virtual Chassis, the flash memory utilization of the master switch is displayed by default. To display the flash memory utilization along with the internal and external flash memory utilization details for each switch or line card, mouse over individual switch or line card images. In EX4600 Virtual Chassis, to display the flash memory utilization along with the internal and external flash memory utilization details of each switch or line card mouse over the green-colored indicator.
Temp.	Indicates the chassis temperature status. Temperatures are listed in Celsius and the corresponding Fahrenheit values. NOTE: The **Temp** field is unavailable for a standalone EX2200-C switch. The **Temp** field is dynamically available for an EX2200 Virtual Chassis switch based on the model of the member clicked. NOTE: In EX4300 Virtual Chassis, the temperature of the master Routing Engine is displayed by default. To display the temperature of the Routing Engine of any switch, click the image of that switch. In EX4600 Virtual Chassis, to display the temperature of the Routing Engine of each switch, mouse over the green-colored indicator.
CPU load	Indicates the average CPU usage over 15 minutes. In a Virtual Chassis configuration, on loading the master or backup switch, the CPU load for that switch's Routing Engine is displayed by default. To display the CPU load for a specific switch's Routing Engine, click the image of that switch.

Copyright © 2018, Juniper Networks, Inc.

Table 207: Health Status (continued)

Field	Description
Fan status	Indicates the status of the fans in the fan tray. The possible values are **OK**, **Failed**, and **Absent**. In a Virtual Chassis configuration, the fan status of the master switch is displayed by default. To display the fan status for any switch , click the image of that switch. NOTE: The **Fan status** field is unavailable for a standalone EX2200-C switch. The **Fan status** field is dynamically available for an EX2200 Virtual Chassis switch based on the model of the member clicked. In EX4600 Virtual Chassis, mouse over the fan icon to display the fan status of all the switches.
EX4500 and EX4550 Switches	
Memory util.	Indicates the memory used in the Routing Engine. In a Virtual Chassis configuration, the memory utilization value of the master Routing Engine is displayed.
Flash	Indicates the usage and capacity of internal flash memory and any external USB flash drive.
Temp.	Indicates the chassis temperature status. Temperatures in the dashboard are listed in Celsius and the corresponding Fahrenheit values. NOTE: The **Temp** field is unavailable for an EX4500 switch.
CPU load	Indicates the average CPU usage over 15 minutes.
Fan status	Indicates the status of the fans in the fan tray. The possible values are **OK**, **Failed**, and **Absent**. This field also indicates the direction of airflow of the fan tray. The possible values are **Front to back** and **Back to front**.
EX6210 Switches	
Memory util.	Indicates the memory used in the master Routing Engine. Click the **backup Routing Engine** to view the memory used in the backup Routing Engine.
CPU load	Indicates the average CPU usage over 15 minutes.
Flash	Indicates the usage and capacity of internal flash memory and any external USB flash drive.
Fan status	Indicates the status of the fans in the fan tray. The possible values are **OK**, **Failed**, and **Absent**.
EX8208 Switches	
Memory util.	Indicates the memory used in the external Routing Engine. In an EX8200 Virtual Chassis, the memory utilization value of the XRE200 External Routing Engine in the master role is displayed. Click the **XRE200 External Routing Engine** in the backup role to view the memory used in the backup external Routing Engine.
CPU load	Indicates the average CPU usage over 15 minutes.
Flash	Indicates the usage and capacity of internal flash memory and any external USB flash drive.
EX8216 Switches	

Copyright © 2018, Juniper Networks, Inc.

Table 207: Health Status (continued)

Field	Description
Memory util.	Indicates the memory used in the external Routing Engine. In an EX8200 Virtual Chassis, the memory utilization value of the XRE200 External Routing Engine in the master role is displayed. Click the XRE200 External Routing Engine in the backup role to view the memory used in the backup external Routing Engine.
CPU load	Indicates the average CPU usage over 15 minutes.
Flash	Indicates the usage and capacity of internal flash memory and any external USB flash drive.
XRE200 External Routing Engines	
Memory util.	Indicates the memory used in the external Routing Engine. In an EX8200 Virtual Chassis, the memory utilization value of the XRE200 External Routing Engine in the master role is displayed. Click the backup XRE200 External Routing Engine to view the memory used in backup external Routing Engine.
CPU load	Indicates the average CPU usage over 15 minutes.
Flash	Indicates the usage and capacity of internal flash memory and any external USB flash drive.
Fan Status	Indicates the status of the fans in the fan tray. The possible values are **OK**, **Failed**, and **Absent**.

Capacity Utilization Panel

Table 208: Capacity Utilization

Field	Description
Number of active ports	Indicates the number of active ports in the switch. Configured Virtual Chassis ports (VCPs) are considered as active ports.
Total number of ports	Indicates the number of ports in the switch. NOTE: In EX3300 and EX4600 Virtual Chassis, the total number of ports of all of the switches is displayed.
Used-up MAC-Table entries	Indicates the number of MAC table entries.
Supported MAC-Table entries	Indicates the maximum number of MAC table entries permitted.
Number of VLANs configured	Indicates the number of VLANs configured. NOTE: Only tagged VLANs are counted.
Number of VLANs supported	Indicates the maximum number of VLANs supported.

Alarms Panel

Displays information about the last five alarms raised in the system. For example, if there are 5 major alarms, then details of all 5 major alarms are displayed. If there are 4 major

Copyright © 2018, Juniper Networks, Inc.

alarms and 3 minor alarms, then details of the 4 major alarms and 1 minor alarm are displayed. Major alarms are displayed in red and minor alarms are displayed in yellow.

In an EX8200 Virtual Chassis, the top 5 alarms for the master external Routing Engine are displayed by default. If you select an EX8200 member switch of the Virtual Chassis, the top 5 alarms for that member switch are displayed.

File System Usage

To display the file system storage details of a switch in the backup or linecard role, click the image of that switch.

Chassis Viewer

Click the **Rear View** button to see the back of the chassis image. Click the **Front View** button to see the front of the chassis image. In a Virtual Chassis configuration, the **Rear View** button is disabled if the switch is not selected.

- Table 209 on page 787—Describes the chassis viewer for EX2200 switches.
- Table 210 on page 788—Describes the chassis viewer for EX2200-C switches.
- Table 211 on page 788—Describes the chassis viewer for EX3200, EX3300, and EX4200 switches.
- Table 212 on page 790—Describes the chassis viewer for EX4300 switches.
- Table 213 on page 791—Describes the chassis viewer for EX4500 switches.
- Table 214 on page 792—Describes the chassis viewer for EX4550 switches.
- Table 215 on page 794—Describes the chassis viewer for EX4600 switches.
- Table 216 on page 794—Describes the chassis viewer for EX6210 switches.
- Table 217 on page 795—Describes the chassis viewer for EX8208 switches.
- Table 218 on page 797—Describes the chassis viewer for EX8216 switches.
- Table 219 on page 797—Describes the chassis viewer for the XRE200 External Routing Engines.

Table 209: Chassis Viewer for EX2200 Switches

Field	Description
Front View	
Interface status	In the image, the following colors denote the interface status: • Green—Interface is up and operational. • Yellow—Interface is up but is nonoperational. • Gray—Interface is down and nonoperational. Mouse over the interface (port) to view more information.
Rear View	

Table 209: Chassis Viewer for EX2200 Switches (continued)

Field	Description
Management (**me0**) port	The management port is used to connect the switch to a management device for out-of-band management.
Console port	The console port is used to connect the switch to a management console or to a console server. (You might do this for initial switch configuration.)
USB port	Indicates the USB port for the switch. NOTE: We recommend that you use USB flash drives purchased from Juniper Networks for your EX Series switch.
Fan tray	Mouse over the fan tray icon to display name, status, and description information.
Power supply	Mouse over the power outlet icon to display name, status, and description information.

Table 210: Chassis Viewer for EX2200-C Switches

Field	Description
Front View	
Interface status	In the image, the following colors denote the interface status: • Green—Interface is up and operational. • Yellow—Interface is up but is nonoperational. • Gray—Interface is down and nonoperational. Mouse over the interface (port) to view more information.
Management (**me0**) port	The management port is used to connect the switch to a management device for out-of-band management.
Console port	The console port is used to connect the switch to a management console or to a console server. (You might do this for initial switch configuration.)
USB port	Indicates the USB port for the switch. NOTE: We recommend that you use USB flash drives purchased from Juniper Networks for your EX Series switch.
Rear View	
Power supply	Mouse over the power outlet icon to display name, status, and description information.

Table 211: Chassis Viewer for EX3200, EX3300, and EX4200 Switches

Field	Description
Front View	

Copyright © 2018, Juniper Networks, Inc.

Table 211: Chassis Viewer for EX3200, EX3300, and EX4200 Switches (continued)

Field	Description
Interface status	In the image, the following colors denote the interface status: • Green—Interface is up and operational. • Yellow—Interface is up but is nonoperational. • Gray—Interface is down and nonoperational. Mouse over the interface (port) to view more information. For a Virtual Chassis configuration, select the switch to view the interface status. If an SFP+ uplink module is installed in the switch, mouse over the port icon to display whether the module is configured to operate in 1-gigabit mode or in 10-gigabit mode. If the module is configured to operate in 1-gigabit mode, the tool tip information is displayed for all 4 ports. If the module is configured to operate in 10-gigabit mode, the tool tip information is displayed only for 2 ports. On an EX3300 switch with the 4x GE/XE SFP+ module, mouse over the port icon to display whether the module is configured to operate in 1-gigabit mode or 10-gigabit mode. For SFP, SFP+, and XFP ports, the interfaces appear dimmed if no transceiver is inserted. The chassis viewer displays **Transceiver not plugged-in** when you mouse over the port icon.
LCD panel	LCD panel configured for the LEDs on the ports. Mouse over the icon to view the current character display.
Rear View of the EX3200 Switch	
Management (**me0**) port	The management port is used to connect the switch to a management device for out-of-band management.
Console port	The console port is used to connect the switch to a management console or to a console server. (You might do this for initial switch configuration.)
USB port	Indicates the USB port for the switch. NOTE: We recommend that you use USB flash drives purchased from Juniper Networks for your EX Series switch.
Fan tray	Mouse over the fan tray icon to display name, status, and description information.
Power supply	Mouse over the power supply icon to display name, status, and description information.
Rear View of the EX3300 and EX4200 Switch	
Fan tray	Mouse over the fan tray icon to display name, status, and description information. For a Virtual Chassis, the status of the fans of the selected member switch is displayed.
Virtual Chassis port	Displayed only when EX4200 switches are configured as a Virtual Chassis. The following colors denote the Virtual Chassis port (VCP) status: • Green—VCP is up and operational. • Yellow—VCP is up but is nonoperational. • Gray—VCP is down and nonoperational.

Copyright © 2018, Juniper Networks, Inc.

Table 211: Chassis Viewer for EX3200, EX3300, and EX4200 Switches (continued)

Field	Description
USB port	Indicates the USB port for the switch. NOTE: We recommend that you use USB flash drives purchased from Juniper Networks for your EX Series switch.
Management (**me0**) port	The management port is used to connect the switch to a management device for out-of-band management.
Console port	The console port is used to connect the switch to a management console or to a console server. (You might do this for initial switch configuration.)
Power supplies	Mouse over the power supply icons to display name, status, and description information.

Table 212: Chassis Viewer for EX4300 Switches

Field	Description
Front View	
Interface status	In the image, the colors listed below denote the interface status for both copper and fiber media type of ports: • Green—Interface is up and operational. • Yellow—Interface is up but is nonoperational. • Gray—Interface is down and nonoperational. Mouse over the interface (port) to view more information.
LCD panel	LCD panel configured for the LEDs on the ports. Mouse over the icon to view the current character display.
Mini USB console	The mini console port is used to connect the switch to the management console.
PIC 2 slot	You can install an uplink module in the PIC 2 slot. Mouse over the ports in the module to view the details of the ports in module. 24-port and 48-port EX4300 switches support the4-port 10-Gigabit SFP+ uplink module. EX4300-32F switches support the 2-port 40-Gigabit QSFP+ uplink module and the 8-port 10-Gigabit SFP+ uplink module. When you install a transceiver in the port, the following colors denote the interface status: • Green—Interface is up and operational. • Yellow—Interface is up but is not operational. • Gray—Interface is down and not operational.
NOTE: In EX4300 switches the LEDs are seen in the front panel, these are not active.	
Rear View of the EX4300 Switch	
Management port	The management port is used to connect the switch to a management device for out-of-band management.

Copyright © 2018, Juniper Networks, Inc.

Table 212: Chassis Viewer for EX4300 Switches (continued)

Field	Description
Console port	The Console port (RJ-45) is used to connect the switch to a management console or to a console server.
USB port	Indicates the USB port for the switch. NOTE: We recommend that you use USB flash drives purchased from Juniper Networks for your EX Series switch.
Fan tray	Mouse over the fan tray icons to display name, status, and description information.
Power supplies	Mouse over the power supply icons to display name, status, and description information.
PIC 1 slot	The rear panel of a 24-port and a 48-port EX4300 switch has four (built-in) 40-Gigabit QSFP+ ports, and the rear panel of an EX4300-32F switch has two (built-in) 40-Gigabit QSFP+ ports, in which you can install QSFP+ transceivers. Mouse over the ports to view the details of the ports. After you install a transceiver in the port, the following colors denote the interface status: • Green—Interface is up and operational. • Yellow—Interface is up but is not operational. • Gray—Interface is down and not operational. For QSFP+ ports, the interfaces appear dimmed if no transceiver is inserted. The chassis viewer displays **Transceiver not plugged in** when you mouse over the port. When a QSFP+ port is configured as a Virtual Chassis Port (VCP), the following colors denote the VCP status: • Green—VCP is up and operational. • Yellow—VCP is up but is not operational. • Gray—VCP is down and not operational.

Table 213: Chassis Viewer for EX4500 Switches

Field	Description
Front View	
Interface status	In the image, the colors listed below denote the interface status: • Green—Interface is up and operational. • Yellow—Interface is up but is nonoperational. • Gray—Interface is down and nonoperational. Mouse over the interface (port) to view more information. For a Virtual Chassis configuration, select the switch to view the interface status. If an SFP+ uplink module is installed in the switch, mouse over the interface (ports) on the module for more information. For SFP and SFP+ ports, the interfaces appear dimmed if no transceiver is inserted. The chassis viewer displays **Transceiver not plugged-in** when you mouse over the port icon.

Table 213: Chassis Viewer for EX4500 Switches (continued)

Field	Description
LCD panel	LCD panel configured for the LEDs on the ports. Mouse over the icon to view the current character display.
Console port	The console port is used to connect the switch to a management console or to a console server.
Management (**me0**) port	The management port is used to connect the switch to a management device for out-of-band management. Use this port for initial switch configuration.
USB port	Indicates the USB port for the switch. NOTE: We recommend that you use USB flash drives purchased from Juniper Networks for your EX Series switch.
Rear View of the EX4500 Switch	
Fan tray	Mouse over the fan tray icon to display status of the fans and airflow direction information. For a Virtual Chassis, the status of the fans of the selected member switch is displayed.
Virtual Chassis port	Displayed only when switches are configured as a Virtual Chassis. The colors listed below denote the Virtual Chassis port (VCP) status: • Green—VCP is up and operational. • Yellow—VCP is up but is nonoperational. • Gray—VCP is down and nonoperational.
Power supplies	Mouse over the power supply icons to display name, status, and description information.
Intraconnect module	Mouse over the module to display details of the intraconnect module. The intraconnect module helps the switch achieve line rate on all its ports.
Virtual Chassis module	Mouse over to display details of the switches in the Virtual Chassis configuration.

Table 214: Chassis Viewer for EX4550 Switches

Field	Description
Front View	

Copyright © 2018, Juniper Networks, Inc.

Table 214: Chassis Viewer for EX4550 Switches (continued)

Field	Description
Interface status	In the image, the colors listed below denote the interface status: • Green—Interface is up and operational. • Yellow—Interface is up but is nonoperational. • Gray—Interface is down and nonoperational. Mouse over the interface (port) to view more information. For a Virtual Chassis configuration, select the switch to view the interface status. If an expansion module or a Virtual Chassis module is installed in the switch, mouse over the interface (ports) on the module for more information. On an EX4550-32F switch, for SFP and SFP+ ports, the interfaces appear dimmed if no transceiver is inserted. The chassis viewer displays **Transceiver (1G/10G) not plugged in** when you mouse over the port icon.
LCD panel	LCD panel configured for the LEDs on the ports. Mouse over the icon to view the current character display.
Console port	The console port is used to connect the switch to a management console or to a console server.
Mini Console port	The mini console port is used to connect the switch to the management console.
Management (**me0**) port	The management port is used to connect the switch to a management device for out-of-band management. Use this port for initial switch configuration.
PIC1 slot	You can insert an uplink module or a Virtual Chassis module in the PIC1 slot. Mouse over to display the details of the module inserted (uplink or Virtual Chassis).
USB port	Indicates the USB port for the switch. NOTE: We recommend that you use USB flash drives purchased from Juniper Networks for your EX Series switch.
Rear View of the EX4550 Switch	
Fan tray	Mouse over the fan tray icon to display the status of the fans and airflow direction information. For a Virtual Chassis, the status of the fans of the selected member switch is displayed.
Virtual Chassis port	Displayed only when switches are configured as a Virtual Chassis. In the image, the colors listed below denote the Virtual Chassis port (VCP) status: • Green—VCP is up and operational. • Yellow—VCP is up but is nonoperational. • Gray—VCP is down and nonoperational.
Power supplies	Mouse over the power supply icons to display name, status, and description information.
PIC2 slot	You can insert an uplink module or a Virtual Chassis module into the PIC2 slot. Mouse over to display the details of the module inserted (uplink or Virtual Chassis).

Copyright © 2018, Juniper Networks, Inc.

Table 215: Chassis Viewer for EX4600 Switches

Field	Description
Front View	
NOTE: J-Web is supported on EX4600 switches only in J-Web Application package Release 14.1X53-A2.	
Interface status	In the image, the colors listed below denote the interface status for both copper and fiber media type of ports: • Green—Interface is up and operational. • Yellow—Interface is up but is nonoperational. • Gray—Interface is down and nonoperational. Mouse over the interface (port) to view more information.
PIC 1 and PIC 2 slots	You can install an expansion module in the PIC 1 and PIC 2 slots. If you have installed an expansion module, mouse over the ports in the module to view the details of the ports in module. When you install a transceiver in the port, the following colors denote the interface status: • Green—Interface is up and operational. • Yellow—Interface is up but is not operational. • Gray—Interface is down and not operational.
NOTE: • In EX4600 switches the LEDs are seen in the front panel; these are not active. • In EX4600 switches there is no LCD panel.	
Rear View of the EX4600 Switch	
Management port	The management ports (RJ-45 and SFP) is used to connect the switch to a management device for out-of-band management.
Console port	The Console port (RJ-45) is used to connect the switch to a management console or to a console server.
USB port	Indicates the USB port for the switch. NOTE: We recommend that you use USB flash drives purchased from Juniper Networks for your EX Series switch.
Fan tray	Mouse over the fan tray icons to display name, status, and description information.
Power supplies	Mouse over the power supply icons to display name, status, and description information.

Table 216: Chassis Viewer for EX6210 Switches

Field	Description
Front View	
Temperature	Mouse over the temperature icon to display the temperature of the CB or line card.

Copyright © 2018, Juniper Networks, Inc.

Table 216: Chassis Viewer for EX6210 Switches (continued)

Field	Description
Interface status	Select the CB or line card. In the image, the colors listed below denote the interface status: • Green—Interface is up and operational. • Yellow—Interface is up but is nonoperational. • Gray—Interface is down and nonoperational. Mouse over the interface (port) to view more information. You can view status for the following ports on the SRE module: • USB port—Indicates the USB port for the switch. NOTE: We recommend that you use USB flash drives purchased from Juniper Networks for your EX Series switch. • Management (**me0**) port—The management port is used to connect the switch to a management device for out-of-band management. There are 2 management ports: fiber and copper. The same status is displayed for both the **me0** ports. • Console port—The console port is used to connect the switch to a management console or to a console server. (You might do this for initial switch configuration.) CBs support 4 SFP+ uplink ports. Mouse over the interface on the CB for more information. For SFP and SFP+ ports, the interfaces appear dimmed if no transceiver is inserted. The chassis viewer displays **Transceiver not plugged-in** when you mouse over the port icon.
Power supplies	Mouse over the power supply icons to display name, status, and description information.
LCD panel	LCD panel configured for the LEDs on the ports. Mouse over the icon to view the current character display of the master Routing Engine. The EX6210 switch has 2 LCD panels, one for each Routing Engine. The backup Routing Engine LCD displays **Backup**.
Rear View of the EX6210 Switch	
Fan tray	Mouse over the fan tray icon to display information regarding the cooling fans.

Table 217: Chassis Viewer for EX8208 Switches

Field	Description
Front View	

Table 217: Chassis Viewer for EX8208 Switches (continued)

Field	Description
Interface status	In the image, click any line card, SRE module, or SF module to view the front view of the selected component. In the image, the colors listed below denote the interface status: • Green—Interface is up and operational. • Yellow—Interface is up but is nonoperational. • Gray—Interface is down and nonoperational. Mouse over the interface (port) to view more information. You can view status for the following ports on the SRE module: • USB port—Indicates the USB port for the switch. NOTE: We recommend that you use USB flash drives purchased from Juniper Networks for your EX Series switch. • Auxiliary port—This port is unavailable. • Management (**me0**) port—The management port is used to connect the switch to a management device for out-of-band management. • Console port—The console port is used to connect the switch to a management console or to a console server. (You might do this for initial switch configuration.) Because the SF module has no ports, no status information is displayed.
Slot numbers	Slots on the switch are labeled, from the top of the switch down: • 0–3 (line cards) • SRE0, SF, SRE1 (SRE and SF modules) • 4–7 (line cards)
Temperature	The active slots contain a gray temperature icon. Mouse over the icon to display temperature information for the slot.
Fan status	Mouse over the fan tray icon to display name, status, and description information.
Power supplies	Mouse over the power supply icons to display name, status, and description information.
LCD panel	LCD panel configured for the LEDs on the ports. Mouse over the icon to view the current character display.
Rear View	The EX8208 switch does not have any components on the rear of the chassis.

Copyright © 2018, Juniper Networks, Inc.

Table 218: Chassis Viewer for EX8216 Switches

Field	Description
Front View	
Interface status	In the image, click any line card or RE module to display the front view of the selected component. In the image, the colors listed below denote the interface status: • Green—Interface is up and operational. • Yellow—Interface is up but is nonoperational. • Gray—Interface is down and nonoperational. Mouse over the interface (port) to view more information. You can view status for the following ports on the RE module: • USB port—Indicates the USB port for the switch. NOTE: We recommend that you use USB flash drives purchased from Juniper Networks for your EX Series switch. • Auxiliary port—This port is unavailable. • Management (**me0**) port—The management port is used to connect the switch to a management device for out-of-band management. • Console port—The console port is used to connect the switch to a management console or to a console server. (You might do this for initial switch configuration.)
Slot numbers	Slots on the switch are labeled, from the top of the switch down: • RE0 (RE module) • RE1 (RE module) • 0–15 (line cards)
Temperature	The active slots contain a gray temperature icon. Mouse over the icon to display temperature information for the slot.
Fan status	Mouse over the fan tray icon to display consolidated information about the fans.
Power supplies	Mouse over the power supply icons to display name, status, and description information.
LCD panel	LCD panel configured for the LEDs on the ports. Mouse over the icon to view the current character display.
Rear View	
SF modules	Mouse over the SF module icons in their respective slots to display information. Slots are numbered SF7–SF0, from left to right.

Table 219: Chassis Viewer for XRE200 External Routing Engines

Field	Description
Front View	

Table 219: Chassis Viewer for XRE200 External Routing Engines (continued)

Field	Description
Interface status	In the image, the colors listed below denote the interface status: • Green—Interface is up and operational. • Yellow—Interface is up but is nonoperational. • Gray—Interface is down and nonoperational. Mouse over the interface (port) to view more information. For a Virtual Chassis configuration, select the switch to view the interface status.
Console port	The console port is used to connect the switch to a management console or to a console server.
Management (**me0**) port	The management port is used to connect the switch to a management device for out-of-band management. Use this port for initial switch configuration.
Virtual Chassis port	In the image, the colors listed below denote the Virtual Chassis port (VCP) status: • Green—VCP is up and operational. • Yellow—VCP is up but is nonoperational. • Gray—VCP is down and nonoperational. Mouse over the interface (port) to view more information.
LCD panel	LCD panel configured for the LEDs on the ports. Mouse over the icon to view the current character display.
Temperature	The active slots contain a gray temperature icon. Mouse over the icon to display temperature information for the slot.
USB port	Indicates the USB port for the switch. NOTE: We recommend that you use USB flash drives purchased from Juniper Networks for your EX Series switch.
PIC1 slot	You can install a Virtual Chassis module in the PIC1 slot. Mouse over the Virtual Chassis ports to display the port status details.
PIC2 slot	You can install a Virtual Chassis module in the PIC2 slot. Mouse over the Virtual Chassis ports to display the port status details.
Rear View of the XRE200 External Routing Engine	
Fan modules	Mouse over the fan modules to display status of the fans and airflow direction information. For a Virtual Chassis, the status of the fans of the selected member switch is displayed.
Power supplies	Mouse over the power supply icons to display name, status, and description information.

Copyright © 2018, Juniper Networks, Inc.

Release History Table

Release	Description
14.1X53-D10	For Junos OS Release 14.1X53-D10 and later, EX3300 switches configured as a Virtual Chassis display the value 1–10 FPC in the Inventory details field.
14.1X53-A2	In J-Web Application package Release 14.1X53-A2, you can form a Virtual Chassis using EX4600 and EX4300 switches.
14.1X53-A2	J-Web is supported on EX4600 switches only in J-Web Application package Release 14.1X53-A2.

Related Documentation

- *J-Web User Interface for EX Series Switches Overview*
- *EX2200 Switches Hardware Overview*
- *EX2300 Switches Hardware Overview*
- *EX3200 Switches Hardware Overview*
- *EX3300 Switches Hardware Overview*
- EX4200 Switches Hardware Overview on page 183
- EX4300 Switches Hardware Overview on page 137
- *EX4500 Switches Hardware Overview*
- *EX6210 Switch Hardware Overview*
- *EX8208 Switch Hardware Overview*
- *EX8216 Switch Hardware Overview*
- Checking Active Alarms with the J-Web Interface on page 910
- *XRE200 External Routing Engine Hardware Guide*

Copyright © 2018, Juniper Networks, Inc.

Copyright © 2018, Juniper Networks, Inc.

CHAPTER 55

Viewing EX4200 System Information

- LCD Panel in EX4200 Switches on page 801
- Chassis Status LEDs in EX4200 Switches on page 806
- Management Port LEDs in EX4200 Switches on page 807
- Network Port LEDs in EX4200 Switches on page 808
- AC Power Supply LEDs in EX4200 Switches on page 813
- DC Power Supply LEDs in EX4200 Switches on page 814
- Dashboard for EX Series Switches on page 814

LCD Panel in EX4200 Switches

The LCD panel on the front panel of the switch shows two lines of text, each of which can contain a maximum of 16 characters. The LCD panel displays a variety of information about the switch and also provides a menu to perform basic operations such as initial setup and reboot.

There are two navigation buttons—**Menu** and **Enter**—to the right of the LCD panel.

See Figure 356 on page 801.

Figure 356: LCD Panel

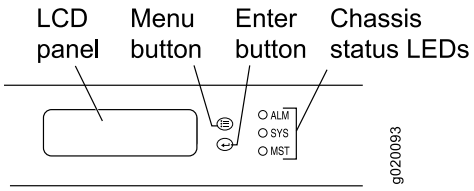

You can configure the second line of the LCD panel to display a custom message. If the LCD panel is configured to display a custom message, the **Menu** button and the **Enter** button are disabled. See *Configuring the LCD Panel on EX Series Switches (CLI Procedure)*.

The LCD panel has a backlight. If the LCD panel is idle for 60 seconds, the backlight turns off. You can turn on the backlight by pressing the **Menu** or **Enter** button once. After turning on the backlight, you can toggle between the LCD panel menus by pressing the **Menu** button and navigate through the menu options by pressing the **Enter** button.

Copyright © 2018, Juniper Networks, Inc.

NOTE: The chassis viewer in the J-Web interface also displays the LCD panel. From the J-Web interface, you can view real-time status information in the LCD panel. See "Dashboard for EX Series Switches" on page 780.

- LCD Panel Modes on page 802
- LCD Panel Menus on page 803

LCD Panel Modes

The LCD panel operates in four modes: boot, idle, status, and maintenance.

The LCD panel operates in boot mode during switch reboot. The boot mode displays the key milestones in the switch boot process. The boot mode does not have any menu options. After the boot process is complete, the LCD panel automatically reverts to the Idle menu.

In an EX4200 switch that is not a member of a Virtual Chassis, the first line of the LCD panel displays the slot number, the role of the switch, and hostname. For a standalone EX4200 switch, the slot number is always **00** and the role is always **RE** (for master).

In an EX4200 switch that is a member of a Virtual Chassis, the first line of the LCD panel displays:

- The slot number (the member ID for the Virtual Chassis member)
- Role of the switch in a Virtual Chassis (**RE** for master, **BK** for backup, and **LC** for linecard member)
- Hostname

In the idle mode, the second line displays the mode of the network ports' Status LED and the number of chassis alarms. The number of alarms is updated every second.

In the status mode, the second line displays:

- Virtual Chassis port (VCP) status (for an EX4200 switch that is a member of a Virtual Chassis)
- Status of the power supply
- Status of the fan and temperature
- Version of Junos OS for EX Series switches loaded on the switch

In the maintenance mode, the second line displays one of the following options that you can use to configure and troubleshoot the switch:

- System halt
- System reboot
- Load rescue
- Request VC port (for an EX4200 switch that is a member of a Virtual Chassis)

 Copyright © 2018, Juniper Networks, Inc.

- Factory default
- System EZSetup

LCD Panel Menus

The LCD panel has three menus: Idle, Status, and Maintenance. Toggle between the LCD panel menus by pressing the **Menu** button. Navigate through the menu options by pressing the **Enter** button.

Table 220 on page 803 describes the LCD panel menu options.

Table 220: LCD Panel Menu Options

Menu	Description

IDLE	In the Idle menu:
	• Press **Enter** to cycle through the Status LED modes:
	  ◦ SPD (speed)
	  ◦ ADM (administrative status)
	  ◦ DPX (duplex)
	  ◦ POE (Power over Ethernet)
	  See *Network Port LEDs in EX3200 Switches* or "Network Port LEDs in EX4200 Switches" on page 808 for information about the Status LED modes.
	• Press **Menu** to exit the Idle menu and go to the Status menu.

Table 220: LCD Panel Menu Options (continued)

Menu	Description

STATUS	The Status menu has the following options:
	• Show VCP status—Choose one of the following:
	  ◦ Press the **Enter** button to display the Virtual Chassis port (VCP) status: Up, Down, Disabled.
	  NOTE: This option is available only for an EX4200 switch that is a member of a Virtual Chassis configuration. It is not available for an EX3200 switch.
	  ◦ Press the **Menu** button to go to the next option in the Status menu.
	• Show PSU status—Choose one of the following:
	  ◦ Press the **Enter** button to display the status of the power supply: OK, Failed, Absent.
	  ◦ Press the **Menu** button to go to the next option in the Status menu.
	• Show Environment status—Choose one of the following:
	  ◦ Press the **Enter** button to display the status of the fan and temperature:
	  ◦ Fan status: OK, Failed, Absent
	  ◦ Temp status: OK, High, Shutdown
	  ◦ Press the **Menu** button to go to the next option in the Status menu.
	• Show Junos version—Choose one of the following:
	  ◦ Press the **Enter** button to display the version of Junos OS for EX Series switches loaded on the switch.
	  ◦ Press the **Menu** button to go to the next option in the Status menu.
	• EXIT STAT MENU?—Choose one of the following:
	  ◦ Press the **Enter** button to exit the Status menu. Then press the **Menu** button to go to the Maintenance menu.
	  ◦ On an EX4200 switch that is a member of a Virtual Chassis configuration, press the **Menu** button to return to the Show VCP status option.
	  NOTE: This option is available only for an EX4200 switch that is a member of a Virtual Chassis configuration. It is not available for an EX3200 switch.
	
	If you do not want users to use Status menu options, disable the entire menu or individual menu options. See *Configuring the LCD Panel on EX Series Switches (CLI Procedure)*.

Copyright © 2018, Juniper Networks, Inc.

Table 220: LCD Panel Menu Options (continued)

Menu	Description

MAINT (Maintenance Menu)	The Maintenance menu has the following options to configure and troubleshoot the switch:
	• SYSTEM HALT?—Choose one of the following:
	  ◦ Press the **Enter** button to halt the switch. Press the **Enter** button again to confirm the halt.
	  ◦ Press the **Menu** button to go to the next option in the Maintenance menu.
	• SYSTEM REBOOT?—Choose one of the following:
	  ◦ Press the **Enter** button to reboot the switch. Press the **Enter** button again to confirm the reboot.
	  ◦ Press the **Menu** button to go to the next option in the Maintenance menu.
	• LOAD RESCUE?—Choose one of the following:
	  ◦ Press the **Enter** button to roll back the switch to the rescue configuration. Press the **Enter** button again to confirm the rollback.
	  ◦ Press the **Menu** button to go to the next option in the Maintenance menu.
	• REQUEST VC PORT?—Choose one of the following:
	  ◦ Press the **Enter** button to configure an uplink module port or an EX4200-24F network port to be a Virtual Chassis port (VCP) or to delete a VCP from the switch configuration (when you delete the VCP, the port is reset to an uplink module port or an EX4200-24F network port).
	  NOTE: This option is available only for an EX4200 switch that is a member of a Virtual Chassis configuration. It is not available for an EX3200 switch.
	  ◦ Press the **Menu** button to go to the next option in the Maintenance menu.
	• FACTORY DEFAULT?—Choose one of the following:
	  ◦ Press the **Enter** button to restore the switch to the factory default configuration. Press the **Enter** button again to confirm the restoration.
	  ◦ Press the **Menu** button to go to the next option in the Maintenance menu.
	• ENTER EZSETUP?—Choose one of the following:
	  ◦ Press the **Enter** button to launch EZSetup. Press the **Enter** button again to confirm the launch.
	  NOTE: You can use the ENTER EZSETUP option only if the switch is in the factory default configuration.
	  For information about EZSetup, see *Connecting and Configuring an EX Series Switch (J-Web Procedure)*.
	  ◦ Press the **Menu** button to go to the next option in the Maintenance menu.
	• EXIT MAINT MENU?—Choose one of the following:
	  ◦ Press the **Enter** button to exit the Maintenance menu. Then press the **Menu** button to go to the Idle menu.
	  ◦ Press the **Menu** button to go to the System Halt option.
	If you do not want users to use Maintenance menu options, disable the entire menu or individual menu options. See *Configuring the LCD Panel on EX Series Switches (CLI Procedure)*.

Related Documentation

- *Front Panel of an EX4200 Switch*
- Field-Replaceable Units in EX4200 Switches on page 185
- *Connecting and Configuring an EX Series Switch (CLI Procedure)*

- *Connecting and Configuring an EX Series Switch (J-Web Procedure)*

Chassis Status LEDs in EX4200 Switches

The front panel of an EX4200 switch has three LEDs on the far right side of the panel, next to the LCD panel (see Figure 357 on page 806).

Figure 357: Chassis Status LEDs in an EX4200 Switch

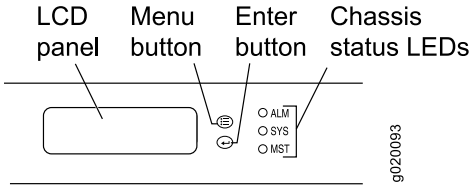

Table 221 on page 806 describes the chassis status LEDs in an EX4200 switch, their colors and states, and the status they indicate. You can view the colors of the three LEDs remotely through the CLI by issuing the operational mode command *show chassis lcd*.

Table 221: Chassis Status LEDs in an EX4200 Switch

LED Label	Color	State and Description
ALM (Alarm)	Unlit	There is no alarm or the switch is halted.
	Red	There is a major alarm. NOTE: When you connect power to the switch, the Alarm (ALM) LED lights red. This behavior is normal. Plugging an active Ethernet cable into the management (MGMT) port on the switch completes the network link and turns off the ALM LED. (See *Connecting a Device to a Network for Out-of-Band Management*.) Connecting the switch to a dedicated management console instead of a network does not affect the ALM LED. The LED remains red until the switch is connected to a network.
	Amber	There is a minor alarm. NOTE: The Alarm (ALM) LED lights amber if you commit a configuration to make it active on the switch and do not also create a rescue configuration to back it up. To save the most recently committed configuration as the rescue configuration, enter the operational mode command **request system configuration rescue save**.
SYS (System)	Green	• On steadily—Junos OS for EX Series switches has been loaded on the switch. • Blinking—The switch is booting. • Off—The switch is powered off or is halted.

Copyright © 2018, Juniper Networks, Inc.

Table 221: Chassis Status LEDs in an EX4200 Switch (continued)

LED Label	Color	State and Description
MST (Master)	Green	In a standalone EX4200 switch: • On steadily—The switch is functioning normally. • Off—The switch is powered off or is halted. In a Virtual chassis configuration: • On steadily—The switch is the master in the Virtual Chassis configuration. • Blinking—The switch is the backup in the Virtual Chassis configuration. • Off—The switch is a linecard member in the Virtual Chassis configuration or is halted.

A major alarm (red) indicates a critical error condition that requires immediate action.

A minor alarm (amber) indicates a noncritical condition that requires monitoring or maintenance. A minor alarm that is left unchecked might cause interruption in service or performance degradation.

NOTE: **The amber glow of the Alarm LED that indicates a minor alarm closely resembles the red glow that indicates a major alarm.**

All three LEDs can be lit simultaneously.

Related Documentation

- *show chassis lcd*
- *Front Panel of an EX4200 Switch*
- *Chassis Component Alarm Conditions on EX4200 Switches*
- Checking Active Alarms with the J-Web Interface on page 910
- Understanding Alarm Types and Severity Levels on EX Series Switches on page 908

Management Port LEDs in EX4200 Switches

The management port on EX4200 switches has two LEDs that indicate link/activity and port status (see Figure 358 on page 808). The management port is set to full-duplex and the speed is set to 100 Mbps.

Figure 358: LEDs on the Management Port on an EX4200 Switch

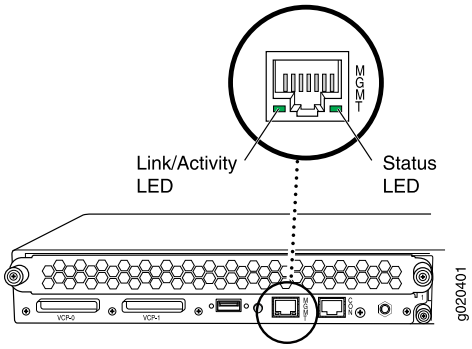

Table 222 on page 808 describes the Link/Activity LED.

Table 222: Link/Activity LED on the Management Port on EX4200 Switches

LED	Color	State and Description
Link/Activity	Green	• Blinking—The port and the link are active, and there is link activity. • On steadily—The port and the link are active, but there is no link activity. • Off—The port is not active.

Table 223 on page 808 describes the Status LED (administrative status).

Table 223: Status LED on the Management Port on EX4200 Switches

LED	Color	State and Description
Status	Green	• On steadily—Administrative status is enabled. • Off—Administrative status is disabled.

Related Documentation

- See *Rear Panel of an EX4200 Switch* for port location.
- *Connecting a Device to a Network for Out-of-Band Management*

Network Port LEDs in EX4200 Switches

Each network port on the switch has two LEDs. The four figures in this topic show the location of those LEDs:

- Figure 359 on page 809 shows the location of the LEDs on the network ports on the front panel.
- Figure 360 on page 809 shows the location of the LEDs on the uplink module ports on the SFP uplink module.

Copyright © 2018, Juniper Networks, Inc.

- Figure 361 on page 810 shows the location of the LEDs on the uplink module ports on the SFP+ and SFP+ MACsec uplink modules.
- Figure 362 on page 810 shows the location of the LEDs on the uplink module ports on the XFP uplink module.

Figure 359: LEDs on the Network Ports on the Front Panel

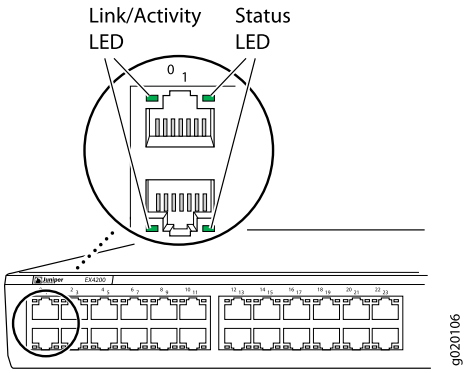

Figure 360: LEDs on the Uplink Module Ports on the SFP Uplink Module

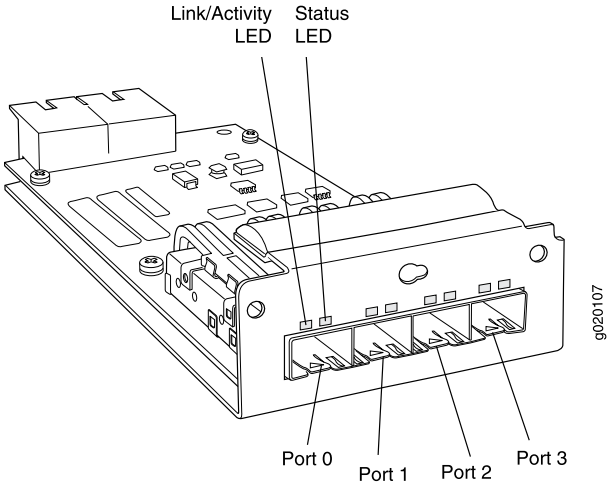

Figure 361: LEDs on the Uplink Module Ports on the SFP+ and SFP+ MACsec Uplink Modules

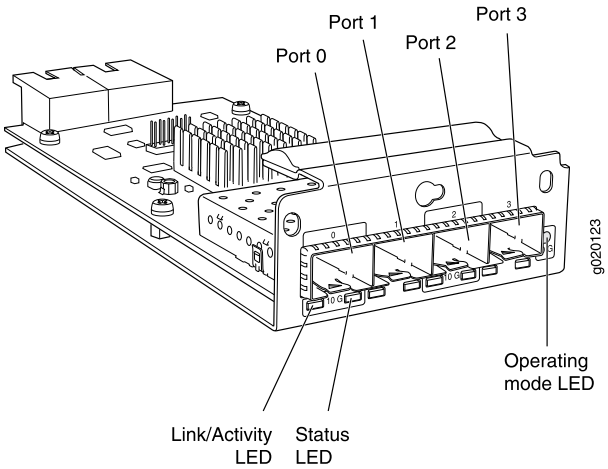

Figure 362: LEDs on the Uplink Module Ports on the XFP Uplink Module

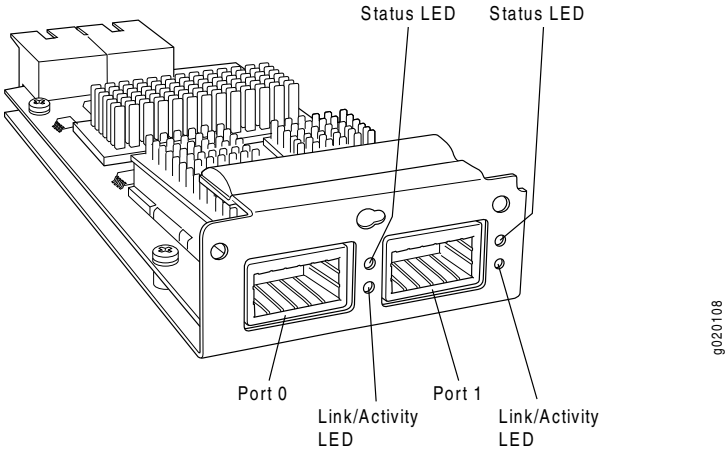

The LEDs labeled Link/Activity LED in Figure 359 on page 809, Figure 360 on page 809, Figure 361 on page 810, and Figure 362 on page 810 indicate link activity. The LEDs labeled Status LED in Figure 359 on page 809, Figure 360 on page 809, Figure 361 on page 810, and Figure 362 on page 810 indicate the status of one of the four port parameters. The port parameters are administrative status, duplex mode, Power over Ethernet (PoE) status, and speed.

Table 224 on page 810 describes the Link/Activity LED.

Table 224: Link/Activity LED on Network Ports

LED	Color	State and Description
Link/Activity	Green	• Blinking—The port and the link are active, and there is link activity. • On steadily—The port and the link are active, but there is no link activity. • Off—The port is not active.

Copyright © 2018, Juniper Networks, Inc.

Table 225 on page 812 describes the Status LED. From the Idle menu of the LCD, use the **Enter** button on the LCD panel to toggle between the ADM, DPX, POE, and SPD indicators.

Table 225: Status LED on Network Ports

LED	LCD Indicator	State and Description
Status	LED: ADM	Indicates the administrative status (enabled or disabled). The status indicators are: • Green—Administrative status enabled. • Unlit—Administrative status disabled.
	LED: DPX	Indicates the duplex mode. The uplink module ports are always set to full-duplex; therefore, the LED is always green. The status indicators for network ports on the front panel are: • Green—Port is set to full-duplex mode. • Unlit—Port is set to half-duplex mode.
	LED: MACsec	Indicates the MACsec status (enabled or disabled). MACsec can be enabled only if you have installed the SFP+ MACsec uplink module. The status indicators are: • Green—MACsec is enabled on the port. • Unlit—MACsec is disabled on the port.

	LED: POE	Indicates the PoE status on switches with PoE-enabled ports.
		Here the term POE refers to both PoE and PoE+ as applicable.
		PoE is not enabled on uplink module ports; therefore, the LED for those ports is always unlit.
		The status indicators for network ports on the front panel are:
		• Green—PoE is enabled on the port.
		• Amber—PoE is enabled on the port, but no power is drawn from the port because of one of the following:
		  ◦ No device that draws power from the port is connected to the port.
		  ◦ A device that draws power from the port is connected to the port, but the device is not drawing any power from the port.
		• Unlit—PoE is not enabled on the port.

	LED: SPD	Indicates the speed. The speed indicators for network ports on the front panel are: • One blink per second—10 Mbps • Two blinks per second—100 Mbps • Three blinks per second—1000 Mbps The speed indicators for network ports on the SFP uplink module are: • Green—1000 Mbps • Unlit—10/100 Mbps

Copyright © 2018, Juniper Networks, Inc.

Table 225: Status LED on Network Ports (continued)

LED	LCD Indicator	State and Description
		The speed indicators for network ports on the SFP+ and SFP+ MACsec uplink module are: • Green—The speed of the transceiver installed in the port is the same as the speed at which the uplink module port is configured to operate. • Unlit—The speed of the transceiver installed in the port is not the same as the speed at which the uplink module port is configured to operate. The speed of the XFP uplink module ports is always 10 Gbps, which is also the speed of XFP transceivers, therefore, this LED is always green on an XFP uplink module..

Related Documentation

- *Front Panel of an EX4200 Switch*
- *Uplink Modules in EX4200 Switches*
- LCD Panel in EX4200 Switches on page 801

AC Power Supply LEDs in EX4200 Switches

Table 226 on page 813 describes the LEDs on the AC power supplies.

Table 226: AC Power Supply LEDs

LED	State and Description
AC OK	• Off—Disconnected from power or power is not coming into the power supply. • On—Power is coming into the power supply.
DC OK	• Off—Power supply is not sending out power correctly. • On—Power supply is sending out power correctly.

NOTE: If the AC OK LED and the DC OK LED are unlit, either the AC power cord is not installed properly or the power supply fuse has failed. If the AC OK LED is lit and the DC OK LED is unlit, the AC power supply is not installed properly or the power supply has an internal failure.

Related Documentation

- Power Supply in EX4200 Switches on page 188
- *Connecting AC Power to an EX4200 Switch*

DC Power Supply LEDs in EX4200 Switches

. Table 227 on page 814 describes the LEDs on the DC power supplies.

Table 227: DC Power Supply LEDs

LED Label	Color	Description
LED A	Red	Inputs A and B are normal, but there is no output.
LED B	Red	
LED A	Green	Inputs A and B are normal; output is normal.
LED B	Green	
LED A	Flash Red	Input A has failed because the power supply fuse has failed, input voltage is low, or there is a loose connection; output is normal.
LED B	Green	
LED A	Green	Input B has failed because the power supply fuse has failed, input voltage is low, or there is a loose connection; output is normal.
LED B	Flash Red	
LED A	Flash Red	Both inputs have failed because the power supply fuse has failed, input voltage is low, or there is a loose connection; output is normal.
LED B	Flash Red	
LED A	Off	There is no input; there is no output.
LED B	Off	

Related Documentation

- Power Supply in EX4200 Switches on page 188
- *Connecting DC Power to an EX4200 Switch*

Dashboard for EX Series Switches

NOTE: **This topic applies only to the J-Web Application package.**

When you log in to the J-Web user interface, the dashboard for the Juniper Networks EX Series Ethernet Switches appears. Use the dashboard to view system information.

The Update Available window appears if there is a latest update of the J-Web Application package available on the Juniper Networks server. This window is enabled by the auto update feature of J-Web.

Copyright © 2018, Juniper Networks, Inc.

NOTE:

- The Update Available window will *not* appear when you log in, if you have not selected the **Check for updates automatically on every login** in the *Update Preference* section in the **Maintain** > **Update J-Web** side pane. By default, the *Check for update automatically on every login* is selected.
- If you choose *Update Later*, you can update to the latest J-Web Application package by clicking the orange icon next to *Update Available* on the top pane of the J-Web interface or through **Maintain** > **Update J-Web**.

The dashboard comprises a graphical chassis viewer and four panels.

- Graphical Chassis Viewer on page 815
- System Information Panel on page 817
- Health Status Panel on page 819
- Capacity Utilization Panel on page 821
- Alarms Panel on page 821
- File System Usage on page 822
- Chassis Viewer on page 822

Graphical Chassis Viewer

The Dashboard panel displays a graphical view of the chassis of a switch. In a Virtual Chassis, it displays a graphical view of each member switch.

In a Virtual Chassis, the default values are shown on the Dashboard panel when no chassis image is clicked. The panel displays the value for a switch if you click its image.

NOTE: If the member switch is not present, inactive, or not provisioned, you cannot expand the member switch image.

In J-Web Application package Release 14.1X53-A2, you can form a Virtual Chassis using EX4600 and EX4300 switches. When in a mixed Virtual Chassis consisting of EX4600 switches and EX4300 switches, the EX4600 switches can be the master, backup, or in the linecard role, while the EX4300 switches must be in the linecard role.

Table 204 on page 781 lists the details that are displayed on each member switch.

Table 228: Details of a Virtual Chassis Member Switch

Details	Example
Model number of the member switch	**EX3300**

Table 228: Details of a Virtual Chassis Member Switch (continued)

Details	Example
Assigned ID that applies to the entire Virtual Chassis configuration	**ID 2** NOTE: If the member switch is not provisioned, the serial number of the switch is displayed instead of its ID.
Role of the member switch	**Master** Possible roles are: **Master**, **Backup**, or **Linecard**
Status of the member switch	**Prsnt** Possible statuses are: **Prsnt**, **NotPrsnt**, **Inactive**, or **Unprvsnd**

The status of the member switch is displayed on the image of the switch. If the member switch appears dimmed, it means the switch is not present, is inactive, or is not provisioned in the Virtual Chassis. If the member switch does not appear dimmed, it means the switch is present and is active.

Table 205 on page 781 describes the possible status of a member switch.

Table 229: Status of a Member Switch in a Virtual Chassis

If the member switch is	It appears as	It means the member switch
Present	**Prsnt**	Has established physical and logical connections with Virtual Chassis member switches.
Not present	dimmed and **NotPrsnt**	Has been disconnected from the existing Virtual Chassis.
Inactive	dimmed and **Inactive**	Has established physical connections, but is unable to establish logical connections.
Not provisioned	dimmed and **Unprvsnd**	Cannot synchronize with the existing preprovisioned Virtual Chassis.

Click **Rear View** for a graphical view of the rear panel of the switch.

Click **Preferences** to choose which panels must be displayed and set the refresh interval for chassis viewer information. Click **OK** to save your changes and return to the dashboard or click **Cancel** to return to the dashboard without saving changes.

NOTE: You can drag the various panels to different locations in the J-Web window.

Copyright © 2018, Juniper Networks, Inc.

System Information Panel

Table 230: System Information

Field	Description
System name	Indicates the local name of the EX Series switch. The local name of the EX Series switches changes when an individual image is clicked.
Device model	Indicates the model of the EX Series switch. In a Virtual Chassis configuration, to indicate the model of a switch, click the image of that switch. NOTE: In a Virtual Chassis setup for an EX6210, EX8208, or EX8216 switch, the Device model field displays details of the master Routing Engine. To view details of a member, select it.

Table 230: System Information (continued)

Field	Description
Inventory details	Indicates the following: • For EX3200 switches; and for EX2200, EX2200-C, EX3300, EX4200, EX4300, EX4500, EX4550, and EX4600 switches that are not configured as Virtual Chassis, the value displayed in Inventory details field is always 1 FPC. FPC is a legacy term for a slot in a large Juniper Networks chassis; which simply refers to the standalone switch. • For EX2200 and EX2200-C switches configured as a Virtual Chassis, the value displayed in the Inventory details field is 1–4 FPC, with the number corresponding to the number of member switches. • For EX3300 switches configured as a Virtual Chassis, the value displayed in the Inventory details field is 1–6 FPC, with the number corresponding to the number of member switches. NOTE: For Junos OS Release 14.1X53-D10 and later, EX3300 switches configured as a Virtual Chassis display the value 1–10 FPC in the Inventory details field. • For EX4200, EX4500, EX4550, and EX4600 switches configured as a Virtual Chassis, the value displayed in the Inventory details field is 1–10 FPC, with the number corresponding to the number of member switches. • For EX6210 switches, the values displayed in the Inventory details field are 1–2 CB and 1–9 FPC. CB, or Control Board, refers to the SRE module. FPC refers to line cards and the FPC within the CB. • For an EX8208 switch, the values displayed in Inventory details field are 1–3 CB and 0–8 FPC. CB, or Control Board, refers to SRE and SF modules. FPC refers to line cards. • For EX8216 switches, the values displayed in Inventory details field are 1–2 CB and 0–16 FPC. CB, or Control Board, refers to RE modules and FPC refers to line cards. • For an XRE200 External Routing Engine in an EX8200 Virtual Chassis, the value displayed in Inventory details is 1 XRE. XRE refers to RE modules. For XRE200 External Routing Engines configured as a Virtual Chassis, the values displayed in Inventory details are 1–2 XRE and 0–4 LCC, where LCC refers to the EX8200 line card chassis.
Junos image	Indicates the version of the Junos OS image. In a Virtual Chassis configuration, the Junos OS image of the master switch is displayed by default. To display the Junos OS image of a specific switch, click the image of that switch.
Boot image	Indicates the version of the boot image that is used. In a Virtual Chassis configuration, the boot image of the master switch is displayed by default. To display the boot image of a specific switch, click the image of that switch.

Copyright © 2018, Juniper Networks, Inc.

Table 230: System Information (continued)

Field	Description
Device uptime	Indicates the time since the last reboot. In a Virtual Chassis configuration, to display the uptime of the specific switch, click the image of that switch.
Last configured time	Indicates the time when the switch was last configured.

Health Status Panel

Table 231: Health Status

Field	Description
EX2200, EX2200-C, EX3200, EX3300, EX4200, and EX4300 Switches	
Memory util.	Indicates the memory used in the Routing Engine. In a Virtual Chassis configuration, the memory utilization value of the master Routing Engine is displayed. NOTE: In EX4300 and EX4600 Virtual Chassis, to display the Routing Engine memory utilization of the master or backup, click the respective image. J-Web is supported on EX4600 switches only in J-Web Application package Release 14.1X53-A2.
Flash	Indicates the usage and capacity of internal flash memory and any external USB flash drive. NOTE: In EX4300 Virtual Chassis, the flash memory utilization of the master switch is displayed by default. To display the flash memory utilization along with the internal and external flash memory utilization details for each switch or line card, mouse over individual switch or line card images. In EX4600 Virtual Chassis, to display the flash memory utilization along with the internal and external flash memory utilization details of each switch or line card mouse over the green-colored indicator.
Temp.	Indicates the chassis temperature status. Temperatures are listed in Celsius and the corresponding Fahrenheit values. NOTE: The **Temp** field is unavailable for a standalone EX2200-C switch. The **Temp** field is dynamically available for an EX2200 Virtual Chassis switch based on the model of the member clicked. NOTE: In EX4300 Virtual Chassis, the temperature of the master Routing Engine is displayed by default. To display the temperature of the Routing Engine of any switch, click the image of that switch. In EX4600 Virtual Chassis, to display the temperature of the Routing Engine of each switch, mouse over the green-colored indicator.
CPU load	Indicates the average CPU usage over 15 minutes. In a Virtual Chassis configuration, on loading the master or backup switch, the CPU load for that switch's Routing Engine is displayed by default. To display the CPU load for a specific switch's Routing Engine, click the image of that switch.

Copyright © 2018, Juniper Networks, Inc.

Table 231: Health Status (continued)

Field	Description
Fan status	Indicates the status of the fans in the fan tray. The possible values are **OK**, **Failed**, and **Absent**. In a Virtual Chassis configuration, the fan status of the master switch is displayed by default. To display the fan status for any switch , click the image of that switch. NOTE: The **Fan status** field is unavailable for a standalone EX2200-C switch. The **Fan status** field is dynamically available for an EX2200 Virtual Chassis switch based on the model of the member clicked. In EX4600 Virtual Chassis, mouse over the fan icon to display the fan status of all the switches.
EX4500 and EX4550 Switches	
Memory util.	Indicates the memory used in the Routing Engine. In a Virtual Chassis configuration, the memory utilization value of the master Routing Engine is displayed.
Flash	Indicates the usage and capacity of internal flash memory and any external USB flash drive.
Temp.	Indicates the chassis temperature status. Temperatures in the dashboard are listed in Celsius and the corresponding Fahrenheit values. NOTE: The **Temp** field is unavailable for an EX4500 switch.
CPU load	Indicates the average CPU usage over 15 minutes.
Fan status	Indicates the status of the fans in the fan tray. The possible values are **OK**, **Failed**, and **Absent**. This field also indicates the direction of airflow of the fan tray. The possible values are **Front to back** and **Back to front**.
EX6210 Switches	
Memory util.	Indicates the memory used in the master Routing Engine. Click the **backup Routing Engine** to view the memory used in the backup Routing Engine.
CPU load	Indicates the average CPU usage over 15 minutes.
Flash	Indicates the usage and capacity of internal flash memory and any external USB flash drive.
Fan status	Indicates the status of the fans in the fan tray. The possible values are **OK**, **Failed**, and **Absent**.
EX8208 Switches	
Memory util.	Indicates the memory used in the external Routing Engine. In an EX8200 Virtual Chassis, the memory utilization value of the XRE200 External Routing Engine in the master role is displayed. Click the **XRE200 External Routing Engine** in the backup role to view the memory used in the backup external Routing Engine.
CPU load	Indicates the average CPU usage over 15 minutes.
Flash	Indicates the usage and capacity of internal flash memory and any external USB flash drive.
EX8216 Switches	

Copyright © 2018, Juniper Networks, Inc.

Table 231: Health Status (continued)

Field	Description
Memory util.	Indicates the memory used in the external Routing Engine. In an EX8200 Virtual Chassis, the memory utilization value of the XRE200 External Routing Engine in the master role is displayed. Click the XRE200 External Routing Engine in the backup role to view the memory used in the backup external Routing Engine.
CPU load	Indicates the average CPU usage over 15 minutes.
Flash	Indicates the usage and capacity of internal flash memory and any external USB flash drive.
XRE200 External Routing Engines	
Memory util.	Indicates the memory used in the external Routing Engine. In an EX8200 Virtual Chassis, the memory utilization value of the XRE200 External Routing Engine in the master role is displayed. Click the backup XRE200 External Routing Engine to view the memory used in backup external Routing Engine.
CPU load	Indicates the average CPU usage over 15 minutes.
Flash	Indicates the usage and capacity of internal flash memory and any external USB flash drive.
Fan Status	Indicates the status of the fans in the fan tray. The possible values are **OK**, **Failed**, and **Absent**.

Capacity Utilization Panel

Table 232: Capacity Utilization

Field	Description
Number of active ports	Indicates the number of active ports in the switch. Configured Virtual Chassis ports (VCPs) are considered as active ports.
Total number of ports	Indicates the number of ports in the switch. NOTE: In EX3300 and EX4600 Virtual Chassis, the total number of ports of all of the switches is displayed.
Used-up MAC-Table entries	Indicates the number of MAC table entries.
Supported MAC-Table entries	Indicates the maximum number of MAC table entries permitted.
Number of VLANs configured	Indicates the number of VLANs configured. NOTE: Only tagged VLANs are counted.
Number of VLANs supported	Indicates the maximum number of VLANs supported.

Alarms Panel

Displays information about the last five alarms raised in the system. For example, if there are 5 major alarms, then details of all 5 major alarms are displayed. If there are 4 major

alarms and 3 minor alarms, then details of the 4 major alarms and 1 minor alarm are displayed. Major alarms are displayed in red and minor alarms are displayed in yellow.

In an EX8200 Virtual Chassis, the top 5 alarms for the master external Routing Engine are displayed by default. If you select an EX8200 member switch of the Virtual Chassis, the top 5 alarms for that member switch are displayed.

File System Usage

To display the file system storage details of a switch in the backup or linecard role, click the image of that switch.

Chassis Viewer

Click the **Rear View** button to see the back of the chassis image. Click the **Front View** button to see the front of the chassis image. In a Virtual Chassis configuration, the **Rear View** button is disabled if the switch is not selected.

- Table 209 on page 787—Describes the chassis viewer for EX2200 switches.
- Table 210 on page 788—Describes the chassis viewer for EX2200-C switches.
- Table 211 on page 788—Describes the chassis viewer for EX3200, EX3300, and EX4200 switches.
- Table 212 on page 790—Describes the chassis viewer for EX4300 switches.
- Table 213 on page 791—Describes the chassis viewer for EX4500 switches.
- Table 214 on page 792—Describes the chassis viewer for EX4550 switches.
- Table 215 on page 794—Describes the chassis viewer for EX4600 switches.
- Table 216 on page 794—Describes the chassis viewer for EX6210 switches.
- Table 217 on page 795—Describes the chassis viewer for EX8208 switches.
- Table 218 on page 797—Describes the chassis viewer for EX8216 switches.
- Table 219 on page 797—Describes the chassis viewer for the XRE200 External Routing Engines.

Table 233: Chassis Viewer for EX2200 Switches

Field	Description
Front View	
Interface status	In the image, the following colors denote the interface status: • Green—Interface is up and operational. • Yellow—Interface is up but is nonoperational. • Gray—Interface is down and nonoperational. Mouse over the interface (port) to view more information.
Rear View	

Copyright © 2018, Juniper Networks, Inc.

Table 233: Chassis Viewer for EX2200 Switches (continued)

Field	Description
Management (**me0**) port	The management port is used to connect the switch to a management device for out-of-band management.
Console port	The console port is used to connect the switch to a management console or to a console server. (You might do this for initial switch configuration.)
USB port	Indicates the USB port for the switch. NOTE: We recommend that you use USB flash drives purchased from Juniper Networks for your EX Series switch.
Fan tray	Mouse over the fan tray icon to display name, status, and description information.
Power supply	Mouse over the power outlet icon to display name, status, and description information.

Table 234: Chassis Viewer for EX2200-C Switches

Field	Description
Front View	
Interface status	In the image, the following colors denote the interface status: • Green—Interface is up and operational. • Yellow—Interface is up but is nonoperational. • Gray—Interface is down and nonoperational. Mouse over the interface (port) to view more information.
Management (**me0**) port	The management port is used to connect the switch to a management device for out-of-band management.
Console port	The console port is used to connect the switch to a management console or to a console server. (You might do this for initial switch configuration.)
USB port	Indicates the USB port for the switch. NOTE: We recommend that you use USB flash drives purchased from Juniper Networks for your EX Series switch.
Rear View	
Power supply	Mouse over the power outlet icon to display name, status, and description information.

Table 235: Chassis Viewer for EX3200, EX3300, and EX4200 Switches

Field	Description
Front View	

Table 235: Chassis Viewer for EX3200, EX3300, and EX4200 Switches (continued)

Field	Description
Interface status	In the image, the following colors denote the interface status: • Green—Interface is up and operational. • Yellow—Interface is up but is nonoperational. • Gray—Interface is down and nonoperational. Mouse over the interface (port) to view more information. For a Virtual Chassis configuration, select the switch to view the interface status. If an SFP+ uplink module is installed in the switch, mouse over the port icon to display whether the module is configured to operate in 1-gigabit mode or in 10-gigabit mode. If the module is configured to operate in 1-gigabit mode, the tool tip information is displayed for all 4 ports. If the module is configured to operate in 10-gigabit mode, the tool tip information is displayed only for 2 ports. On an EX3300 switch with the 4x GE/XE SFP+ module, mouse over the port icon to display whether the module is configured to operate in 1-gigabit mode or 10-gigabit mode. For SFP, SFP+, and XFP ports, the interfaces appear dimmed if no transceiver is inserted. The chassis viewer displays **Transceiver not plugged-in** when you mouse over the port icon.
LCD panel	LCD panel configured for the LEDs on the ports. Mouse over the icon to view the current character display.
Rear View of the EX3200 Switch	
Management (**me0**) port	The management port is used to connect the switch to a management device for out-of-band management.
Console port	The console port is used to connect the switch to a management console or to a console server. (You might do this for initial switch configuration.)
USB port	Indicates the USB port for the switch. NOTE: We recommend that you use USB flash drives purchased from Juniper Networks for your EX Series switch.
Fan tray	Mouse over the fan tray icon to display name, status, and description information.
Power supply	Mouse over the power supply icon to display name, status, and description information.
Rear View of the EX3300 and EX4200 Switch	
Fan tray	Mouse over the fan tray icon to display name, status, and description information. For a Virtual Chassis, the status of the fans of the selected member switch is displayed.
Virtual Chassis port	Displayed only when EX4200 switches are configured as a Virtual Chassis. The following colors denote the Virtual Chassis port (VCP) status: • Green—VCP is up and operational. • Yellow—VCP is up but is nonoperational. • Gray—VCP is down and nonoperational.

Copyright © 2018, Juniper Networks, Inc.

Table 235: Chassis Viewer for EX3200, EX3300, and EX4200 Switches (continued)

Field	Description
USB port	Indicates the USB port for the switch. NOTE: We recommend that you use USB flash drives purchased from Juniper Networks for your EX Series switch.
Management (**me0**) port	The management port is used to connect the switch to a management device for out-of-band management.
Console port	The console port is used to connect the switch to a management console or to a console server. (You might do this for initial switch configuration.)
Power supplies	Mouse over the power supply icons to display name, status, and description information.

Table 236: Chassis Viewer for EX4300 Switches

Field	Description
Front View	
Interface status	In the image, the colors listed below denote the interface status for both copper and fiber media type of ports: • Green—Interface is up and operational. • Yellow—Interface is up but is nonoperational. • Gray—Interface is down and nonoperational. Mouse over the interface (port) to view more information.
LCD panel	LCD panel configured for the LEDs on the ports. Mouse over the icon to view the current character display.
Mini USB console	The mini console port is used to connect the switch to the management console.
PIC 2 slot	You can install an uplink module in the PIC 2 slot. Mouse over the ports in the module to view the details of the ports in module. 24-port and 48-port EX4300 switches support the4-port 10-Gigabit SFP+ uplink module. EX4300-32F switches support the 2-port 40-Gigabit QSFP+ uplink module and the 8-port 10-Gigabit SFP+ uplink module. When you install a transceiver in the port, the following colors denote the interface status: • Green—Interface is up and operational. • Yellow—Interface is up but is not operational. • Gray—Interface is down and not operational.
NOTE: In EX4300 switches the LEDs are seen in the front panel, these are not active.	
Rear View of the EX4300 Switch	
Management port	The management port is used to connect the switch to a management device for out-of-band management.

Table 236: Chassis Viewer for EX4300 Switches (continued)

Field	Description
Console port	The Console port (RJ-45) is used to connect the switch to a management console or to a console server.
USB port	Indicates the USB port for the switch. NOTE: We recommend that you use USB flash drives purchased from Juniper Networks for your EX Series switch.
Fan tray	Mouse over the fan tray icons to display name, status, and description information.
Power supplies	Mouse over the power supply icons to display name, status, and description information.
PIC 1 slot	The rear panel of a 24-port and a 48-port EX4300 switch has four (built-in) 40-Gigabit QSFP+ ports, and the rear panel of an EX4300-32F switch has two (built-in) 40-Gigabit QSFP+ ports, in which you can install QSFP+ transceivers. Mouse over the ports to view the details of the ports. After you install a transceiver in the port, the following colors denote the interface status: • Green—Interface is up and operational. • Yellow—Interface is up but is not operational. • Gray—Interface is down and not operational. For QSFP+ ports, the interfaces appear dimmed if no transceiver is inserted. The chassis viewer displays **Transceiver not plugged in** when you mouse over the port. When a QSFP+ port is configured as a Virtual Chassis Port (VCP), the following colors denote the VCP status: • Green—VCP is up and operational. • Yellow—VCP is up but is not operational. • Gray—VCP is down and not operational.

Table 237: Chassis Viewer for EX4500 Switches

Field	Description
Front View	
Interface status	In the image, the colors listed below denote the interface status: • Green—Interface is up and operational. • Yellow—Interface is up but is nonoperational. • Gray—Interface is down and nonoperational. Mouse over the interface (port) to view more information. For a Virtual Chassis configuration, select the switch to view the interface status. If an SFP+ uplink module is installed in the switch, mouse over the interface (ports) on the module for more information. For SFP and SFP+ ports, the interfaces appear dimmed if no transceiver is inserted. The chassis viewer displays **Transceiver not plugged-in** when you mouse over the port icon.

Copyright © 2018, Juniper Networks, Inc.

Table 237: Chassis Viewer for EX4500 Switches (continued)

Field	Description
LCD panel	LCD panel configured for the LEDs on the ports. Mouse over the icon to view the current character display.
Console port	The console port is used to connect the switch to a management console or to a console server.
Management (**me0**) port	The management port is used to connect the switch to a management device for out-of-band management. Use this port for initial switch configuration.
USB port	Indicates the USB port for the switch. NOTE: We recommend that you use USB flash drives purchased from Juniper Networks for your EX Series switch.
Rear View of the EX4500 Switch	
Fan tray	Mouse over the fan tray icon to display status of the fans and airflow direction information. For a Virtual Chassis, the status of the fans of the selected member switch is displayed.
Virtual Chassis port	Displayed only when switches are configured as a Virtual Chassis. The colors listed below denote the Virtual Chassis port (VCP) status: • Green—VCP is up and operational. • Yellow—VCP is up but is nonoperational. • Gray—VCP is down and nonoperational.
Power supplies	Mouse over the power supply icons to display name, status, and description information.
Intraconnect module	Mouse over the module to display details of the intraconnect module. The intraconnect module helps the switch achieve line rate on all its ports.
Virtual Chassis module	Mouse over to display details of the switches in the Virtual Chassis configuration.

Table 238: Chassis Viewer for EX4550 Switches

Field	Description
Front View	

Table 238: Chassis Viewer for EX4550 Switches (continued)

Field	Description
Interface status	In the image, the colors listed below denote the interface status: • Green—Interface is up and operational. • Yellow—Interface is up but is nonoperational. • Gray—Interface is down and nonoperational. Mouse over the interface (port) to view more information. For a Virtual Chassis configuration, select the switch to view the interface status. If an expansion module or a Virtual Chassis module is installed in the switch, mouse over the interface (ports) on the module for more information. On an EX4550-32F switch, for SFP and SFP+ ports, the interfaces appear dimmed if no transceiver is inserted. The chassis viewer displays **Transceiver (1G/10G) not plugged in** when you mouse over the port icon.
LCD panel	LCD panel configured for the LEDs on the ports. Mouse over the icon to view the current character display.
Console port	The console port is used to connect the switch to a management console or to a console server.
Mini Console port	The mini console port is used to connect the switch to the management console.
Management (**me0**) port	The management port is used to connect the switch to a management device for out-of-band management. Use this port for initial switch configuration.
PIC1 slot	You can insert an uplink module or a Virtual Chassis module in the PIC1 slot. Mouse over to display the details of the module inserted (uplink or Virtual Chassis).
USB port	Indicates the USB port for the switch. NOTE: We recommend that you use USB flash drives purchased from Juniper Networks for your EX Series switch.
Rear View of the EX4550 Switch	
Fan tray	Mouse over the fan tray icon to display the status of the fans and airflow direction information. For a Virtual Chassis, the status of the fans of the selected member switch is displayed.
Virtual Chassis port	Displayed only when switches are configured as a Virtual Chassis. In the image, the colors listed below denote the Virtual Chassis port (VCP) status: • Green—VCP is up and operational. • Yellow—VCP is up but is nonoperational. • Gray—VCP is down and nonoperational.
Power supplies	Mouse over the power supply icons to display name, status, and description information.
PIC2 slot	You can insert an uplink module or a Virtual Chassis module into the PIC2 slot. Mouse over to display the details of the module inserted (uplink or Virtual Chassis).

Copyright © 2018, Juniper Networks, Inc.

Table 239: Chassis Viewer for EX4600 Switches

Field	Description
Front View	
NOTE: J-Web is supported on EX4600 switches only in J-Web Application package Release 14.1X53-A2.	
Interface status	In the image, the colors listed below denote the interface status for both copper and fiber media type of ports: • Green—Interface is up and operational. • Yellow—Interface is up but is nonoperational. • Gray—Interface is down and nonoperational. Mouse over the interface (port) to view more information.
PIC 1 and PIC 2 slots	You can install an expansion module in the PIC 1 and PIC 2 slots. If you have installed an expansion module, mouse over the ports in the module to view the details of the ports in module. When you install a transceiver in the port, the following colors denote the interface status: • Green—Interface is up and operational. • Yellow—Interface is up but is not operational. • Gray—Interface is down and not operational.
NOTE: • In EX4600 switches the LEDs are seen in the front panel; these are not active. • In EX4600 switches there is no LCD panel.	
Rear View of the EX4600 Switch	
Management port	The management ports (RJ-45 and SFP) is used to connect the switch to a management device for out-of-band management.
Console port	The Console port (RJ-45) is used to connect the switch to a management console or to a console server.
USB port	Indicates the USB port for the switch. NOTE: We recommend that you use USB flash drives purchased from Juniper Networks for your EX Series switch.
Fan tray	Mouse over the fan tray icons to display name, status, and description information.
Power supplies	Mouse over the power supply icons to display name, status, and description information.

Table 240: Chassis Viewer for EX6210 Switches

Field	Description
Front View	
Temperature	Mouse over the temperature icon to display the temperature of the CB or line card.

Table 240: Chassis Viewer for EX6210 Switches (continued)

Field	Description
Interface status	Select the CB or line card. In the image, the colors listed below denote the interface status: • Green—Interface is up and operational. • Yellow—Interface is up but is nonoperational. • Gray—Interface is down and nonoperational. Mouse over the interface (port) to view more information. You can view status for the following ports on the SRE module: • USB port—Indicates the USB port for the switch. NOTE: We recommend that you use USB flash drives purchased from Juniper Networks for your EX Series switch. • Management (**me0**) port—The management port is used to connect the switch to a management device for out-of-band management. There are 2 management ports: fiber and copper. The same status is displayed for both the **me0** ports. • Console port—The console port is used to connect the switch to a management console or to a console server. (You might do this for initial switch configuration.) CBs support 4 SFP+ uplink ports. Mouse over the interface on the CB for more information. For SFP and SFP+ ports, the interfaces appear dimmed if no transceiver is inserted. The chassis viewer displays **Transceiver not plugged-in** when you mouse over the port icon.
Power supplies	Mouse over the power supply icons to display name, status, and description information.
LCD panel	LCD panel configured for the LEDs on the ports. Mouse over the icon to view the current character display of the master Routing Engine. The EX6210 switch has 2 LCD panels, one for each Routing Engine. The backup Routing Engine LCD displays **Backup**.
Rear View of the EX6210 Switch	
Fan tray	Mouse over the fan tray icon to display information regarding the cooling fans.

Table 241: Chassis Viewer for EX8208 Switches

Field	Description
Front View	

Copyright © 2018, Juniper Networks, Inc.

Table 241: Chassis Viewer for EX8208 Switches (continued)

Field	Description
Interface status	In the image, click any line card, SRE module, or SF module to view the front view of the selected component. In the image, the colors listed below denote the interface status: • Green—Interface is up and operational. • Yellow—Interface is up but is nonoperational. • Gray—Interface is down and nonoperational. Mouse over the interface (port) to view more information. You can view status for the following ports on the SRE module: • USB port—Indicates the USB port for the switch. NOTE: We recommend that you use USB flash drives purchased from Juniper Networks for your EX Series switch. • Auxiliary port—This port is unavailable. • Management (**me0**) port—The management port is used to connect the switch to a management device for out-of-band management. • Console port—The console port is used to connect the switch to a management console or to a console server. (You might do this for initial switch configuration.) Because the SF module has no ports, no status information is displayed.
Slot numbers	Slots on the switch are labeled, from the top of the switch down: • 0–3 (line cards) • SRE0, SF, SRE1 (SRE and SF modules) • 4–7 (line cards)
Temperature	The active slots contain a gray temperature icon. Mouse over the icon to display temperature information for the slot.
Fan status	Mouse over the fan tray icon to display name, status, and description information.
Power supplies	Mouse over the power supply icons to display name, status, and description information.
LCD panel	LCD panel configured for the LEDs on the ports. Mouse over the icon to view the current character display.
Rear View	The EX8208 switch does not have any components on the rear of the chassis.

Table 242: Chassis Viewer for EX8216 Switches

Field	Description
Front View	
Interface status	In the image, click any line card or RE module to display the front view of the selected component. In the image, the colors listed below denote the interface status: • Green—Interface is up and operational. • Yellow—Interface is up but is nonoperational. • Gray—Interface is down and nonoperational. Mouse over the interface (port) to view more information. You can view status for the following ports on the RE module: • USB port—Indicates the USB port for the switch. NOTE: We recommend that you use USB flash drives purchased from Juniper Networks for your EX Series switch. • Auxiliary port—This port is unavailable. • Management (**me0**) port—The management port is used to connect the switch to a management device for out-of-band management. • Console port—The console port is used to connect the switch to a management console or to a console server. (You might do this for initial switch configuration.)
Slot numbers	Slots on the switch are labeled, from the top of the switch down: • RE0 (RE module) • RE1 (RE module) • 0–15 (line cards)
Temperature	The active slots contain a gray temperature icon. Mouse over the icon to display temperature information for the slot.
Fan status	Mouse over the fan tray icon to display consolidated information about the fans.
Power supplies	Mouse over the power supply icons to display name, status, and description information.
LCD panel	LCD panel configured for the LEDs on the ports. Mouse over the icon to view the current character display.
Rear View	
SF modules	Mouse over the SF module icons in their respective slots to display information. Slots are numbered SF7–SF0, from left to right.

Table 243: Chassis Viewer for XRE200 External Routing Engines

Field	Description
Front View	

Copyright © 2018, Juniper Networks, Inc.

Table 243: Chassis Viewer for XRE200 External Routing Engines (continued)

Field	Description
Interface status	In the image, the colors listed below denote the interface status: • Green—Interface is up and operational. • Yellow—Interface is up but is nonoperational. • Gray—Interface is down and nonoperational. Mouse over the interface (port) to view more information. For a Virtual Chassis configuration, select the switch to view the interface status.
Console port	The console port is used to connect the switch to a management console or to a console server.
Management (**me0**) port	The management port is used to connect the switch to a management device for out-of-band management. Use this port for initial switch configuration.
Virtual Chassis port	In the image, the colors listed below denote the Virtual Chassis port (VCP) status: • Green—VCP is up and operational. • Yellow—VCP is up but is nonoperational. • Gray—VCP is down and nonoperational. Mouse over the interface (port) to view more information.
LCD panel	LCD panel configured for the LEDs on the ports. Mouse over the icon to view the current character display.
Temperature	The active slots contain a gray temperature icon. Mouse over the icon to display temperature information for the slot.
USB port	Indicates the USB port for the switch. NOTE: We recommend that you use USB flash drives purchased from Juniper Networks for your EX Series switch.
PIC1 slot	You can install a Virtual Chassis module in the PIC1 slot. Mouse over the Virtual Chassis ports to display the port status details.
PIC2 slot	You can install a Virtual Chassis module in the PIC2 slot. Mouse over the Virtual Chassis ports to display the port status details.
Rear View of the XRE200 External Routing Engine	
Fan modules	Mouse over the fan modules to display status of the fans and airflow direction information. For a Virtual Chassis, the status of the fans of the selected member switch is displayed.
Power supplies	Mouse over the power supply icons to display name, status, and description information.

Release History Table

Release	Description
14.1X53-D10	For Junos OS Release 14.1X53-D10 and later, EX3300 switches configured as a Virtual Chassis display the value 1–10 FPC in the Inventory details field.
14.1X53-A2	In J-Web Application package Release 14.1X53-A2, you can form a Virtual Chassis using EX4600 and EX4300 switches.
14.1X53-A2	J-Web is supported on EX4600 switches only in J-Web Application package Release 14.1X53-A2.

Related Documentation

- *J-Web User Interface for EX Series Switches Overview*
- *EX2200 Switches Hardware Overview*
- *EX2300 Switches Hardware Overview*
- *EX3200 Switches Hardware Overview*
- *EX3300 Switches Hardware Overview*
- EX4200 Switches Hardware Overview on page 183
- EX4300 Switches Hardware Overview on page 137
- *EX4500 Switches Hardware Overview*
- *EX6210 Switch Hardware Overview*
- *EX8208 Switch Hardware Overview*
- *EX8216 Switch Hardware Overview*
- Checking Active Alarms with the J-Web Interface on page 910
- *XRE200 External Routing Engine Hardware Guide*

Copyright © 2018, Juniper Networks, Inc.

PART 6

Troubleshooting

- Restoring Junos OS on page 837
- Restoring QFX3100 Volumes on page 849
- Returning Hardware on page 861
- Alarms and System Log Messages on page 897

Copyright © 2018, Juniper Networks, Inc.

CHAPTER 56

Restoring Junos OS

- Creating an Emergency Boot Device for QFX Series Switches on page 837
- Performing a Recovery Installation on page 839
- Performing a QFabric System Recovery Installation on the Director Group on page 841

Creating an Emergency Boot Device for QFX Series Switches

If Junos OS on the device is damaged in some way that prevents the software from loading properly, you can use an emergency boot device to repartition the primary disk and load a fresh installation of Junos OS. Use the following procedure to create an emergency boot device.

Before you begin, you need to download the installation media image for your device and Junos OS release from https://www.juniper.net/customers/support/ .

NOTE: You can create the emergency boot device on another Juniper Networks switch or router, or any PC or laptop that supports Linux. The steps you take to create the emergency boot device vary, depending on the device.

To create an emergency boot device:

1. Use FTP to copy the installation media image into the **/var/tmp** directory on the device.

2. Insert a USB device into the USB port.

3. From the Junos OS command-line interface (CLI), start the shell:

   ```
   user@device> start shell
   %
   ```

4. Switch to the root account using the **su** command:

   ```
   % su
   Password: password
   ```

NOTE: The password is the root password for the device. If you logged in to the device as root, you do not need to perform this step.

5. Enter the following command on the device:

   root@device% **dd if=/var/tmp/*filename* of=/dev/da1 bs=1m**

   The device writes the installation media image to the USB device:

```
root@device% dd if=install-media-qfx-5e-15.1X53-D30.5-domestic.img of=/dev/da0
 bs=1m
1399+0 records in
1399+0 records out
1466957824 bytes transferred in 394.081902 secs (3722469 bytes/sec)
```

6. Log out of the shell:

```
root@device% exit
% exit
user@device>
```

Related Documentation

- USB Port Specifications for the QFX Series on page 257
- Performing a Recovery Installation on page 839
- *Performing a Recovery Installation Using an Emergency Boot Device*

Copyright © 2018, Juniper Networks, Inc.

Performing a Recovery Installation

If Junos OS on your device is damaged in some way that prevents the software from loading correctly, you may need to perform a recovery installation using an emergency boot device (for example, a USB flash drive) to restore the default factory installation. Once you have recovered the software, you need to restore the device configuration. You can either create a new configuration as you did when the device was shipped from the factory, or if you saved the previous configuration, you can simply restore that file to the device.

Starting in Junos OS Release 14.1, you can also use a system snapshot as a bootup option when your Junos OS or configuration is damaged. The system snapshot feature takes a "snapshot" of the files currently used to run the device—the complete contents of the **/config** directories, which include the running Juniper Networks Junos OS, the active configuration, and the rescue configuration, as well as the host OS—and copies all of these files into an external USB flash drive. See *Understanding How to Back Up an Installation on Switches*.

NOTE: **System snapshot is not supported on QFX10002 switches.**

If at all possible, you should try to perform the following steps before you perform the recovery installation:

1. Ensure that you have an emergency boot device to use during the installation. See "Creating an Emergency Boot Device for QFX Series Switches" on page 837 for information on how to create an emergency boot device.
2. Copy the existing configuration in the file **/config/juniper.conf.gz** from the device to a remote system, such as a server, or to an emergency boot device. For extra safety, you can also copy the backup configurations (the files named **/config/juniper.conf.*n***, where *n* is a number from 0 through 9) to a remote system or to an emergency boot device.

   WARNING: **The recovery installation process completely overwrites the entire contents of the internal flash storage.**

3. Copy any other stored files to a remote system as desired.

To reinstall Junos OS:

1. Insert the emergency boot device into the QFX Series device.
2. Reboot the QFX Series device.

   NOTE: **Do not power off the device if it is already on.**

```
[edit system]
user@device> request system reboot
```

If you do not have access to the CLI, power cycle the QFX Series device.

The emergency boot device (external USB install media) is detected. At this time, you can load the Junos OS from the emergency boot device onto the internal flash storage.

3. The software prompts you with the following options:

```
External USB install media detected.
You can load Junos from this media onto an internal drive.
Press 'y' to proceed, 'f' to format and install, or 'n' to abort.
Do you wish to continue ([y]/f/n)? f
```

4. Type **f** to format the internal flash storage and install the Junos OS on the emergency boot device onto the internal flash storage.

   If you do no want to format the internal flash storage, type **y**.

   The following messages are displayed:

```
Installing packages from external USB drive da1
Packages will be installed to da0, media size: 8G

Processing format options
Fri September  4 01:18:44 UTC 2012

-- IMPORTANT INFORMATION --
Installer has detected settings to format system boot media.
This operation will erase all data from your system.

Formatting installation disk .. this will take a while, please wait
Disabling platform watchdog - threshold 12 mins

Determining installation slice
Fri September  4 01:27:07 UTC 2012
```

5. The device copies the software from the emergency boot device, occasionally displaying status messages. Copying the software can take up to 12 minutes.

   When the device is finished copying the software, you are presented with the following prompt:

```
*** Fri September  4 01:19:00 UTC 2012***
Installation successful..
Please select one of the following options:
Reboot to installed Junos after removing install media (default) ... 1
Reboot to installed Junos by disabling install media ............... 2
Exit to installer debug shell ...................................... 3
Install Junos to alternate slice ................................... 4
Your choice: 4
NOTE: System installer will now install Junos to alternate slice
Do not power off or remove the external installer media or
interrupt the installation mechanism.
```

6. Select **4** to install Junos OS to the alternate slice of the partition, and then press Enter.

Copyright © 2018, Juniper Networks, Inc.

7. Remove the emergency boot device when prompted and then press Enter. The device then reboots from the internal flash storage on which the software was just installed. When the reboot is complete, the device displays the login prompt.
8. Create a new configuration as you did when the device was shipped from the factory, or restore the previously saved configuration file to the device.

Release History Table

Release	Description
14.1	Starting in Junos OS Release 14.1, you can also use a system snapshot as a bootup option when your Junos OS or configuration is damaged.

Related Documentation

- Creating an Emergency Boot Device for QFX Series Switches on page 837

Performing a QFabric System Recovery Installation on the Director Group

If the software on your QFabric system is damaged in some way that prevents the software from loading correctly, or you need to upgrade the software on your QFabric system, you may need to perform a recovery installation on the Director group.

If possible, perform the following steps before you perform the recovery installation:

1. Ensure that you have an emergency boot device (for example, an external USB flash drive) for each of your Director devices to use during the recovery installation.

   You can either use the external USB flash drive containing the software supplied by Juniper Networks, or you can use an external USB flash drive supplied by Juniper Networks on which you install the QFabric system install media.

2. Because the recovery installation process completely overwrites the entire contents of the Director device, make sure you back up any configuration files and initial setup information on a different external USB flash drive before you begin a recovery installation. You will need to restore this information as part of recovery process.

   Use the **request system software configuration-backup** command to back up your configuration files and initial setup information:

   `user@switch>` **request system software configuration-backup** ***path***

NOTE: To recover the Director group, you must upgrade both Director devices in parallel. If you are recovering only one Director device in a Director group, and the software version will remain the same between the two Director devices, make sure that the other Director device is powered on and operational. If the software version of the Director device you are recovering will be different, make sure that the other Director device is powered off and is not operational.

- (Optional) Creating an Emergency Boot Device Using a Juniper Networks External Blank USB Flash Drive on page 842
- Performing a Recovery Installation Using a Juniper Networks External USB Flash Drive with Preloaded Software on page 844

(Optional) Creating an Emergency Boot Device Using a Juniper Networks External Blank USB Flash Drive

If you do not have an external USB flash drive preloaded with the software from Juniper Networks to use as an emergency boot device, you can create your own, using a blank external USB flash drive provided by Juniper Networks. Download the install media from the Juniper Networks Support website onto your UNIX workstation, uncompress and untar the software, and then burn the software image onto your Juniper Networks external USB (4-gigabyte) flash drive. Make sure you create two emergency boot devices, one for each Director device, so you can perform a recovery installation in parallel.

1. Using a Web browser, navigate to the https://www.juniper.net/support .
2. Click **Download Software**.
3. In the *Switching*box, click *Junos OS Platforms*.
4. In the *QFX Series* section, click the name of the platform for which you want to download software.
5. Click the *Software* tab and select the release number from the *Release* drop-down list.
6. Select the complete install media you want to download in the *QFabric System Install Media* section.

   A login screen appears.
7. Enter your name and password and press **Enter**.
8. Read the End User License Agreement, click the **I agree** radio button, and then click **Proceed**.

 Copyright © 2018, Juniper Networks, Inc.

9. Log in and save the install media file to your UNIX workstation.

10. Use FTP to access the UNIX workstation where the install media resides.

    ftp ftp://*hostname/pathname install-media-qfabric-<version>*.img.tgz

11. When prompted, enter your username and password.

12. Make sure you are in binary mode by entering **binary** at the prompt.

    binary

13. Use the **get** command to transfer the installation package from the FTP host to your UNIX workstation.

    get *install-media-qfabric-<version>*.img.tgz

14. Close the FTP session:

    bye

15. Untar the *install-media-qfabric-<version>* .img.tgz file on your UNIX workstation.

    ```
    tar -xvzf install-media-qfabric-11.3X30.6.img.tgz
    ```

16. Insert a blank external USB (4-gigabyte) flash drive supplied by Juniper Networks into your UNIX workstation.

17. Erase the bootable partition in the external USB flash drive by issuing the following **dd** command.

    dd if=/dev/zero of=/dev/sdb count=20

18. Burn the software image you just downloaded to your UNIX workstation onto your external USB flash drive by issuing the following **dd** command:

    dd if=install-media-qfabric-11.3X30.6.img of=/dev/sdb bs=16k
    ```
    250880+0 records in
    250880+0 records out
    4110417920 bytes (4.1 GB) copied, 5.10768 seconds, 805 MB/s
    ```

19. Perform the steps in "Performing a Recovery Installation Using a Juniper Networks External USB Flash Drive with Preloaded Software" on page 844 to continue with the recovery installation.

Performing a Recovery Installation Using a Juniper Networks External USB Flash Drive with Preloaded Software

This procedure describes how to perform a recovery installation using an external USB flash drive that contains Junos OS software.

NOTE: Since the recovery installation process completely overwrites the entire contents of the Director device, you will need to restore the required configuration files and initial setup information. The following procedure assumes you previously saved these backup files with the **request system software configuration-backup** command. Ensure that you have these backup files available on an external USB flash drive before you perform the following steps.

1. Insert the external USB flash drive into the Director device.

2. Perform one of the following tasks:

   - If you have access to the default partition, reboot the Director device by issuing the **request system reboot director-group** command.
   - If you do not have access to the default partition, power cycle the Director device.

   The following menu appears on the Director device console when the Director device boots up:

   ```
   Juniper Networks QFabric Director Install/Recovery Media
   -  To boot from the local disk, wait 10 seconds or press the Enter key.
   -  To reinstall the QFabric software on this Director device, type: install
   ```

3. Type **install** and then press **Enter** to install the software on the Director device.

   Once the installation process is complete, the Director device reboots, and the following menu appears on the Director device console:

   ```
   Juniper Networks QFabric Director Install/Recovery Media
   -  To boot from the local disk, wait 10 seconds or press the Enter key.
   -  To reinstall the QFabric software on this Director device, type: install
   ```

4. Press **Enter** twice.

   The Director device reboots a second time from the local disk that contains the newly installed software.

5. When you see the following prompts, press **Enter**.

   ```
   Starting xinetd: [  OK  ]
   Starting atop:  [  OK  ]
   ```

6. Log in as root on the Director device. Type **root** and press **Enter**.

   ```
   dg0 login: root
   ```


Copyright © 2018, Juniper Networks, Inc.

7. Because the root password has been removed as part of the recovery process, press **Enter** a second time to skip the password entry step.

   NOTE: **Do not enter a root password at this time.**

8. The following menu appears on the Director device console:

```
Before you can access the QFabric system, you must complete the initial setup
 of the Director group by using the steps that follow.
If the initial setup procedure does not complete successfully, log out of the
 Director device and then log back in to restart
 this setup menu.

Continue?[y/n]
```

9. Enter **n** to bypass the initial setup script and enter the Director device root directory, where you can mount the external USB flash drive containing the configuration files and initial setup information.

10. Issue the **ls /mnt** command to list the *mount* directory.

```
root@dg0 ~]# ls /mnt
```

11. Issue the **mkdir** command to create a directory within the mount directory.

```
root@dg0 ~]# mkdir /mnt/myusb
```

12. Issue the **mount /dev/sdb2 /mnt/myusb/** command to mount the external USB flash drive to the local drive of the Director device.

```
root@dg0 ~]# mount /dev/sdb2 /mnt/myusb/
```

13. Issue the **ls -la /mnt/myusb/** command to verify the contents of your mounted external USB flashdrive.

```
root@dg0 ~]# ls -la /mnt/myusb/
total 1770884
drwxr-xr-x 2 root root       4096 Sep  7 05:16 .
drwxr-xr-x 3 root root       4096 Sep  7 10:15 ..
-rw-r--r-- 1 root root       4249 Sep  7 03:52 mybackup-20110907
```

14. Exit the Director device and log back in as root on the Director device.

    The following menu appears:

```
Before you can access the QFabric system, you must complete the initial setup
 of the Director group by using the steps that follow.
If the initial setup procedure does not complete successfully, log out of the
 Director device and then log back in to restart
 this setup menu.

Continue?[y/n] y
Initial Configuration
```

```
You may enter the configuration manually or restore from a backup.

Specify a backup file? [y/n] : y
Please specify the full path of the configuration backup file. :
/mnt/myusb/mybackup-20110907
```

15. Enter **y** to continue.

16. Enter **y** and specify the path to the backup configuration file located on the external USB flash drive.

    ```
    /mnt/myusb/mybackup-20110907
    ```

    The following messages appear:

    ```
    Saving temporary configuration...
    Configuring peer...
    connect error for 1.1.1.2:9001
    Configuring local interfaces...
    Configuring interface eth0 with [10.49.213.163/24:10.49.213.254]
    Configured interface eth0 with [10.49.213.163/24:10.49.213.254]
    Configuring QFabric software with initial pool of 4000 MAC addresses
    [00:10:00:00:00:00 - 00:10:00:00:0f:3b]
    Configuring QFabric address [10.49.213.50]
    Reconfiguring QFabric software static configuration
    Applying the new Director Device password
    Applying the QFabric component password
    First install initial configuration, generating and sharing SSH keys.
    First install initial configuration, generating SSH keys.
    connect error for 1.1.1.2:9001
    Shared SSH keys.
    Configuration complete. Director Group services will auto start within 30
    seconds.
    ```

    The Director device reboots from the local disk on which the software was just installed. Exit the Director device session and log in to the QFabric default partition CLI.

17. Issue the **request system software configuration-restore** command and specify the path to the backup configuration file located on the external USB flash drive to load the previously saved QFabric system configuration.

18. From the default partition, issue the **request system reboot node-group all** command to reboot all of the Node groups in the QFabric system to ensure that all Node devices are running the same version of software as the Director-group.

    ```
    user@switch> request system reboot node-group all
    ```

19. From the default partition, issue the **request system reboot fabric** command to reboot the Interconnect devices and the other components in the fabric in the QFabric system to ensure that Interconnect devices are running the same version of software as the Director group.

Copyright © 2018, Juniper Networks, Inc.

```
user@switch> request system reboot fabric
```

20. Log in to the default partition and issue the **show version component all** command to verify that all components are running the same version of software.

```
user@switch> show version component all
dg1:
-
Hostname: qfabric
Model: qfx3100
JUNOS Base Version [11.3X30.6]

dg0:
-
Hostname: qfabric
Model: qfx3100
JUNOS Base Version [11.3X30.6]

NW-NG-0:
-
Hostname: qfabric
Model: qfx-jvre
JUNOS Base OS boot [11.3X30.6]
JUNOS Base OS Software Suite [11.3X30.6]
JUNOS Kernel Software Suite [11.3X30.6]
JUNOS Crypto Software Suite [11.3X30.6]
JUNOS Online Documentation [11.3X30.6]
JUNOS Enterprise Software Suite [11.3X30.6]
JUNOS Packet Forwarding Engine Support (QFX RE) [11.3X30.6]
JUNOS Routing Software Suite [11.3X30.6]

FC-0:
-
Hostname: qfabric
Model: qfx-jvre
JUNOS Base OS boot [11.3X30.6]
JUNOS Base OS Software Suite [11.3X30.6]
JUNOS Kernel Software Suite [11.3X30.6]
JUNOS Crypto Software Suite [11.3X30.6]
JUNOS Online Documentation [11.3X30.6]
JUNOS Enterprise Software Suite [11.3X30.6]
JUNOS Packet Forwarding Engine Support (QFX RE) [11.3X30.6]
JUNOS Routing Software Suite [11.3X30.6]

FC-1:
Hostname: qfabric
Model: qfx-jvre
JUNOS Base OS boot [11.3X30.6]
JUNOS Base OS Software Suite [11.3X30.6]
JUNOS Kernel Software Suite [11.3X30.6]
JUNOS Crypto Software Suite [11.3X30.6]
JUNOS Online Documentation [11.3X30.6]
JUNOS Enterprise Software Suite [11.3X30.6]
JUNOS Packet Forwarding Engine Support (QFX RE) [11.3X30.6]
JUNOS Routing Software Suite [11.3X30.6]

DRE-0:
-
Hostname: dre-0
Model: qfx-jvre
```

```
JUNOS Base OS boot [11.3X30.6]
JUNOS Base OS Software Suite [11.3X30.6]
JUNOS Kernel Software Suite [11.3X30.6]
JUNOS Crypto Software Suite [11.3X30.6]
JUNOS Online Documentation [11.3X30.6]
JUNOS Enterprise Software Suite [11.3X30.6]
JUNOS Packet Forwarding Engine Support (QFX RE) [11.3X30.6]
JUNOS Routing Software Suite [11.3X30.6]

FM-0:
-
Hostname: qfabric
Model: qfx-jvre
JUNOS Base OS boot [11.3X30.6]
JUNOS Base OS Software Suite [11.3X30.6]
JUNOS Kernel Software Suite [11.3X30.6]
JUNOS Crypto Software Suite [11.3X30.6]
JUNOS Online Documentation [11.3X30.6]
JUNOS Enterprise Software Suite [11.3X30.6]
JUNOS Packet Forwarding Engine Support (QFX RE) [11.3X30.6]
JUNOS Routing Software Suite [11.3X30.6]

nodedevice1:
-
Hostname: qfabric
Model: QFX3500
JUNOS Base OS boot [11.3X30.6]
JUNOS Base OS Software Suite [11.3X30.6]
JUNOS Kernel Software Suite [11.3X30.6]
JUNOS Crypto Software Suite [11.3X30.6]
JUNOS Online Documentation [11.3X30.6]
JUNOS Enterprise Software Suite [11.3X30.6]
JUNOS Packet Forwarding Engine Support (QFX RE) [11.3X30.6]
JUNOS Routing Software Suite [11.3X30.6]

interconnectdevice1:
-
Hostname: qfabric
Model: QFX3108
JUNOS Base OS boot [11.3X30.6]
JUNOS Base OS Software Suite [11.3X30.6]
JUNOS Kernel Software Suite [11.3X30.6]
JUNOS Crypto Software Suite [11.3X30.6]
JUNOS Online Documentation [11.3X30.6]
JUNOS Enterprise Software Suite [11.3X30.6]
JUNOS Packet Forwarding Engine Support (QFX RE) [11.3X30.6]
JUNOS Routing Software Suite [11.3X30.6]
warning:  from interconnectdevice0: Disconnected
```

Related Documentation

- Performing the QFabric System Initial Setup on a QFX3100 Director Group on page 551
- *Upgrading Software on a QFabric System*
- *request system software configuration-backup*
- *request system software configuration-restore*

Copyright © 2018, Juniper Networks, Inc.

CHAPTER 57

Restoring QFX3100 Volumes

- Troubleshooting HDD Module Failures in a RAID Volume on page 849
- Troubleshooting QFX3100 Director Device Isolation on page 859

Troubleshooting HDD Module Failures in a RAID Volume

The two QFX3100 hard disk drive (HDD) modules are organized as a RAID 1, or mirrored configuration. If one HDD module fails or needs to be replaced, the remaining HDD module becomes the primary drive in the RAID. The QFX3100 continues to operate with only the primary drive, but the RAID does not operate optimally because there is no redundancy. Normally, the primary drive is only used in standalone mode until you replace the failed drive. You can replace the failed drive while the unit is running (hot-swap) and the RAID automatically resynchronizes the primary drive to the new drive.

The system operation is severely degraded while the drive automatically synchronizes the remaining drive to the replacement drive. Expect this synchronization process to take at least 17 hours. If you remove the primary drive before the newer drive becomes synchronized with the primary drive, you must re-create the RAID and reinstall the QFX3100 software image.

CAUTION: **If the primary (remaining) HDD module fails or is removed while the RAID is synchronizing, the RAID contents are lost and cannot be recovered.**

The independent failure of two drives is extremely rare. When one or both HDD modules appear to fail, likely causes are:

- One HDD module is not able to autocorrect, causing a hard failure. A replacement HDD module can be hot-swapped with the failed module.
- Both HDD modules have been removed from the QFX3100 and moved to another QFX3100. The RAID becomes inactive and is not recognized as storage in the new location. If the RAID is inactive, you can restore it using an internal controller utility to activate the disk.
- One HDD module has been removed and the new module inserted. However, before the two drives are synchronized, the primary drive is removed. In this scenario, the system loses track of the synchronization and corrupts the RAID. Once it has been

Copyright © 2018, Juniper Networks, Inc.

corrupted, you must bring down the Director device, isolate the Director device, and use an internal controller utility to delete, re-create, and activate both disk members.

BEST PRACTICE: **Allow the RAID to fully synchronize before removing an HDD module.**

- Isolating a Director Device on page 850
- Hot-Swapping a Failed HDD Module on page 851
- Restoring an Inactive RAID on page 851
- Restoring a Corrupted RAID on page 855
- Reconnecting the Director Device to the Control Plane on page 857

Isolating a Director Device

Before restoring an inactive RAID or restoring a corrupted RAID, intentionally isolate the Director device.

1. Gracefully bring down the failing Director device. See "Powering Off a QFX3100 Director Device" on page 559.

2. Disconnect the cable in port **0** of the failing Director device, which connects to the control plane virtual chassis.

3. Disable the interfaces on the EX4200 or E4300 that connect the failing Director device to both Interconnect devices using the **set interface *<ge-x/y/z>* disable** command.
   - On a QFX3000-M QFabric system, disable ge-0/0/40 and ge0/0/41.
     - Copper or fiber EX Series VC0 interfaces:
       - ge-0/0/20
       - ge-0/0/21
     - Copper or fiber EX Series VC1 interfaces:
       - ge-0/0/22
       - ge-0/0/23
   - On a QFX3000-G QFabric system using copper connections, disable port **40** for Director Group 1 failures or port **41** for Director Group 2 failures.
     - Copper EX Series VC0 interfaces:
       - ge-0/0/40
       - ge-1/0/40
       - ge-2/0/40
     - Copper EX Series VC1 interfaces:

 Copyright © 2018, Juniper Networks, Inc.

    - ge-0/0/41
    - ge-1/0/41
    - ge-2/0/41
  - Fiber EX Series VC0 interfaces:
    - ge-0/0/22
    - ge-1/0/22
    - ge-2/0/22
  - Fiber EX Series VC1 interfaces:
    - ge-0/0/23
    - ge-1/0/23
    - ge-2/0/23

The Director device is now isolated from the rest of the QFabric system.

Hot-Swapping a Failed HDD Module

Problem **Description:** A single drive has failed and cannot autocorrect.

Solution If the drive in a single HDD module fails, remove the failing HDD and insert a new one. System operation is degraded while the primary drive transfers data to the replacement drive. Synchronizing data while the system is operational can take up to 17 hours. When synchronization is complete, the RAID is considered optimal. If the system does not synchronize within 17 hours, or if the new HDD module is not recognized as storage, treat the RAID as corrupted.

Restoring an Inactive RAID

Problem **Description:** A valid RAID has become inactive when both HDD modules were removed from a QFX3100 and inserted into another QFX3100.

Solution To restore an inactive RAID:

1. Start the reboot of one of the HDD modules.

2. Press Ctrl+c to interrupt the reboot sequence at the BIOS page. The following example shows a typical BIOS page.

```
LSI Corporation MPT SAS BIOS
MPTBIOS-6.30.00.00 (2009.11.12)
Copyright 2000-2009 LSI Corporation.

Integrated RAID exception detected:
   Volume (00:130) is currently in state INACTIVE/OPTIMAL
```

```
enter the LSI Corp Configuration Utility to investigate!

Press Ctrl-C to start LSI Corp Configuration Utility...
```

Pressing Ctrl+c starts the configuration utility, which after initialization, displays the Adapter List page.

3. Use the arrow keys to select the default adapter, and press Enter to open the Adapter Properties page.

4. Use the arrow keys to select **RAID Properties**, and press Enter to see the Array Type options.

5. Use the arrow keys to select **View Existing Array**, and press Enter to see the existing RAID. The following example shows two inactive HDD modules:

```
* LSI Corp Config Utility      v6.30.00.00 (2009.11.12)
  *
* View Array -- SAS1068E
  *
*      Array                       1 of 1
  *
*      Identifier
  *
*      Type                        IM
  *
*      Scan Order                  ---
  *
*      Size(MB)                    1907348
  *
*      Status                      Inactive
  *
*
  *
*      Manage Array
  *
*
  *
* Slot  Device Identifier             RAID   Hot    Drive      Pred  Size
  *
* Num                                 Disk   Spr    Status     Fail  (MB)
  *
*   0   ATA     WDC WD2003FYYS-01D01  Yes    No     Inactive   No    1907348
 **
*   1   ATA     WDC WD2003FYYS-01D01  Yes    No     Inactive   No    1907348
 **
*
  *
*
  *
*
  *
*
  *
*
  *
*
```


Copyright © 2018, Juniper Networks, Inc.

```
 **
* Esc = Exit Menu       F1/Shift+1 = Help
  *
* Enter=Select Item  Alt+N=Next Array  C=Create an array  R=Refresh Display
  *
*******************************************************************************
```

6. Review the RAID array information and ensure that the internal controller utility detects both modules.

7. Use the arrow keys to select **Manage Array**, and press Enter. The Manage Array page appears, as shown in the following example:

```
* LSI Corp Config Utility      v6.30.00.00 (2009.11.12)
  *
* Manage Array -- SAS1068E
  *
*
  *
*      Identifier
  *
*      Type                       IM
  *
*      Scan Order                 ---
  *
*      Size(MB)                   1907348
  *
*      Status                     Inactive
  *
*
  *
*      Manage Hot Spares
  *
*
  *
*      Synchronize Array
  *
*
  *
*      Activate Array
  *
*
  *
*      Delete Array
  *
*
  *
*
  *
*
  *
*
  *
*
  *
* Esc = Exit Menu       F1/Shift+1 = Help
  *
* Enter = Select Item
```

```
  *
*******************************************************************************
```

8. Select **Activate Array**, and press Enter to enable the system to use both HDD modules as a RAID. The utility returns you to the Adapter Properties page.

9. Select **RAID Properties**, and press Enter to open the New Array Type options page.

10. Select **View Existing Array**, and press Enter to see the status of the HDD modules.

    In the following example, the array is online, active, and synchronizing data. System operation is degraded while the RAID is synchronizing the data.

```
* LSI Corp Config Utility      v6.30.00.00 (2009.11.12)
  *
* View Array -- SAS1068E
  *
*      Array                      1 of 1
  *
*      Identifier                 LSILOGICLogical Volume  3000
  *
*      Type                       IM
  *
*      Scan Order                 12
  *
*      Size(MB)                   1907348
  *
*      Status                      0% Syncd
  *
*
  *
*      Manage Array
  *
*
  *
* Slot  Device Identifier             RAID   Hot    Drive      Pred  Size
  *
* Num                                 Disk   Spr    Status     Fail  (MB)
  *
*   0   ATA     WDC WD2003FYYS-01D01  Yes    No     Not Syncd  No    1907348
  *
*   1   ATA     WDC WD2003FYYS-01D01  Yes    No     Primary    No    1907348
  *
*
  *
*
  *
*
  *
*
  *
*
  *
*
  *
* Esc = Exit Menu       F1/Shift+1 = Help
  *
* Enter=Select Item  Alt+N=Next Array  C=Create an array  R=Refresh Display
```


Copyright © 2018, Juniper Networks, Inc.

```
*
*******************************************************************************
```

CAUTION: Do not reboot the HDD module until synchronization is complete. Otherwise, the synchronization process restarts from the beginning. Synchronization can take up to 17 hours to finish.

11. Press the ESC key three times after synchronization is complete.

12. Select **Exit the Configuration Utility and Reboot** using the arrow keys, and press Enter.

13. After the drive is recognized and is synchronizing, you can monitor the progress of the synchronization using the **show fabric administration inventory direct-group status** command. The View Array page in the utility displays both Primary and Secondary in the Drive Status column when synchronization of both modules is complete.

14. Gracefully bring down the Director device. See "Powering Off a QFX3100 Director Device" on page 559.

15. Reconnect cables and enable the interfaces. See "Reconnecting the Director Device to the Control Plane" on page 857.

Restoring a Corrupted RAID

Problem **Description:** The RAID has become corrupted.

Solution To recover a corrupted RAID using the internal controller utility:

1. Start the reboot of one of the HDD modules.

2. Press Ctrl+c to interrupt the reboot sequence at the BIOS page. The following example shows a typical BIOS page.

```
LSI Corporation MPT SAS BIOS
MPTBIOS-6.30.00.00 (2009.11.12)
Copyright 2000-2009 LSI Corporation.

Integrated RAID exception detected:
   Volume (00:130) is currently in state INACTIVE/OPTIMAL
enter the LSI Corp Configuration Utility to investigate!

Press Ctrl-C to start LSI Corp Configuration Utility...
```

Pressing Ctrl+c starts the configuration utility, which after initialization, displays the Adapter List page.

3. Use the arrow keys to select the default adapte,r and press Enter to open the Adapter Properties page.

4. Use the arrow keys to highlight **RAID Properties**, and press Enter to open the New Array Type Options page.

5. Select **Create IM Volume**, and press Enter to delete the existing volume and create a new volume. The new volume information appears on the Create New Array page.

   The following example shows that both HDD modules are visible but not part of the RAID.

```
 LSI Corp Config Utility      v6.30.00.00 (2009.11.12)
 *
* Create New Array -- SAS1068E
  *
*   Array Type:                        IM
  *
*   Array Size(MB):                    ---------
  *
*
  *
* Slot  Device Identifier             RAID   Hot    Drive      Pred  Size
  *
* Num                                 Disk   Spr    Status     Fail  (MB)
  *
*   0   ATA     WDC WD2003FYYS-01D01  [No]   [No]   ---------  ---   1907729
 **
*   1   ATA     WDC WD2003FYYS-01D01  [No]   [No]   ---------  ---   1907729
 **
*
  *
*
  *
*
  *
*
  *
*
  *
*
  *
*
  *
*
  *
*
  *
*
  *
*
  *
*
  *
*
 **
* Esc = Exit Menu       F1/Shift+1 = Help
  *
* Space/+/- = Select disk for array or hot spare    C = Create array
```


Copyright © 2018, Juniper Networks, Inc.

```
*
*******************************************************************************
```

6. Select the first **No** field in the RAID Disk column and press the Spacebar to change the entry to Yes, to select a disk. The utility gives you the option to overwrite all the data on the drive or to synchronize the data with that on the other drive.

7. Select **D** to delete the corrupt data from the disk.

8. When the Create New Array page appears again, select the second disk and press the Spacebar.

9. Select **C** to create the array after both fields in the RAID Disk column are recognized as storage.

10. Select **Save changes then exit this menu**, and press Enter to start creating the array.

    When the RAID has been created. the adapter Properties page appears again and shows the status as enabled.

11. Press the ESC key twice.

12. Select **Exit the Configuration Utility and Reboot** to complete the RAID recovery.

13. Install the QFX3100 software image using either the QFabric USB install media or the QFabric Director Group recovery media.

14. Gracefully bring down the Director device. See "Powering Off a QFX3100 Director Device" on page 559.

15. Reconnect cables and enable the interfaces. See "Reconnecting the Director Device to the Control Plane" on page 857.

Reconnecting the Director Device to the Control Plane

After restoring an inactive Director device or a corrupted RAID, reconnect the cables and enable the interfaces:

1. Reconnect the cable from port **0** of the Director device to control plane VC0 and port **6** to control plane VC1 .

2. Enable the interfaces on the EX4200 or E4300 that connect the Director device to both control plane VCs using the **set interface** ***<ge-x/y/z>*** command.

   - On a QFX3000-M QFabric system, enable ge-0/0/40 and ge0/0/41.

     - Copper or fiber EX Series VC0 interfaces:

    - ge-0/0/20
    - ge-0/0/21
  - Copper or fiber EX Series VC1 interfaces:
    - ge-0/0/22
    - ge-0/0/23
- On a QFX3000-G QFabric system using copper connections, enable port **40** for Director Group 1 or port **41** for Director Group 2.
  - Copper EX Series VC0 interfaces:
    - ge-0/0/40
    - ge-1/0/40
    - ge-2/0/40
  - Copper EX Series VC1 interfaces:
    - ge-0/0/41
    - ge-1/0/41
    - ge-2/0/41
  - Fiber EX Series VC0 interfaces:
    - ge-0/0/22
    - ge-1/0/22
    - ge-2/0/22
  - Fiber EX Series VC1 interfaces:
    - ge-0/0/23
    - ge-1/0/23
    - ge-2/0/23

3. Power on the Director device, see "Powering On a QFX3100 Director Device" on page 385, and synchronization of the RAID begins. Synchronizing data while the system is operational can take up to 17 hours. When synchronization is complete, the RAID is considered optimal.

Related Documentation

- QFX3100 Director Device Overview on page 25
- Removing an HDD Module from a QFX3100 Director Device on page 599
- Installing an HDD Module in a QFX3100 Director Device on page 601

Copyright © 2018, Juniper Networks, Inc.

Troubleshooting QFX3100 Director Device Isolation

Problem

Description: Both connections between the QFX3100 Director devices are broken so that one of the Director devices in a Director group becomes isolated from the group.

The redundant patch cables interconnecting the Director devices are critical links required for the operation of the Director group. The two inter-Director device links must remain connected when the Director devices are online. After the Director devices are installed and the Director group is active, if a single inter-Director device link loses and regains its connection, the operation of the Director group remains intact. However, the loss of both inter-Director device links causes one Director device to isolate itself from the Director group.

WARNING: **Do not reconnect the inter-Director patch cables before properly restarting the isolated Director device. Restarting the active Director device instead of the isolated Director device can result in both Director devices rebooting, with a subsequent data loss.**

Environment: This problem occurs between the two QFX3100 Director devices found in QFabric systems.

Symptoms: Symptoms of this problem include an unscheduled rebooting of one of the Director devices.

Resolution

Determine Which Director Device Is Isolated

Before restoring the inter-Director device links, determine which one of the Director devices is in isolation.

To locate an isolated Director device, use one of the following methods:

- Review logs or management tools for standard SNMP traps issued from the Director group before the Director device became isolated.
  - If eth-2/6 links are down, the Director group cannot communicate. Normally, one of the devices reboots.
  - If both eth-2/6 and eth-7/8/9 links are down, the Director device is isolated from the control plane and is not providing fabric services.
    - Issue **show fabric session-host**.
- Use the CLI to determine the serial numbers of the active Director device.
  - Issue the **show fabric session-host** command.

```
root@qfabric>show fabric session-host
Identifier: 0281042010000013
```

- Issue the **show fabric administration inventory director-group status | grep "dg0|dg1"** command.

  root@qfabrid> **show fabric administration inventory director-group status | grep "dg0|dg1"**

  ```
  dg0 online master  10.94.214.80   0%   13597976k  4  4 days, 22:36 hrs
  dg1 online master  10.94.214.81   0%   18677380k  3  4 days, 22:25 hrs
  dg0  0281042010000013  online  master
  dg1  0281042010000018  online  backup
  ```

  When the Director devices cannot communicate, the **show fabric administration inventory director-group** command only displays the Director device that is online.

Power Off the Isolated Director Device and Restore the Inter-Director Device Links

CAUTION: Be sure you know which Director device is active and which is isolated. If you power off the active Director device, both Director devices reboot and cause potential data loss on the system.

To restore communication within the Director group:

1. Power off the isolated Director device.
2. Restore the inter-Director device links (port **3** to port **3**) by firmly inserting the redundant patch cables.
3. Power on the previously isolated Director device. The Director device reboots.

Related Documentation

- Connecting QFX3100 Director Devices in a Director Group on page 500

Copyright © 2018, Juniper Networks, Inc.

CHAPTER 58

Returning Hardware

- Returning a QFX3100 Director Device or Component for Repair or Replacement on page 862
- Returning a QFX3008-I Interconnect Device or Component for Repair or Replacement on page 862
- Returning a QFX5100 Device or Component for Repair or Replacement on page 863
- Returning a QFX3600 or QFX3600-I Device or Component for Repair or Replacement on page 863
- Returning a QFX3500 Device or Component for Repair or Replacement on page 864
- Returning an EX4300 Switch or Component for Repair or Replacement on page 865
- Returning an EX4200 Switch or Component for Repair or Replacement on page 865
- Locating the Serial Number on a QFX3100 Director Device or Component on page 866
- Locating the Serial Number on a QFX3008-I Interconnect Device or Component on page 867
- Locating the Serial Number on a QFX5100 Device or Component on page 868
- Locating the Serial Number on a QFX3600 or QFX3600-I Device or Component on page 871
- Locating the Serial Number on a QFX3500 Device or Component on page 872
- Locating the Serial Number on an EX4300 Switch or Component on page 874
- Locating the Serial Number on an EX4200 Switch or Component on page 880
- Packing a QFX3100 Director Device or Component for Shipping on page 881
- Packing a QFX3008-I Interconnect Device or Component for Shipping on page 883
- Packing a QFX5100 Device or Component for Shipping on page 885
- Packing a QFX3600 or QFX3600-I Device or Component for Shipping on page 887
- Packing a QFX3500 Device or Component for Shipping on page 889
- Packing an EX4300 Switch or Component for Shipping on page 890
- Packing an EX4200 Switch or Component for Shipping on page 893
- Contacting Customer Support to Obtain a Return Materials Authorization for a QFX Series Device or Component on page 895

Copyright © 2018, Juniper Networks, Inc.

Returning a QFX3100 Director Device or Component for Repair or Replacement

If you need to return a QFX3100 Director device or component to Juniper Networks for repair or replacement, follow this procedure:

1. Determine the serial number of the component. For instructions, see "Locating the Serial Number on a QFX3100 Director Device or Component" on page 866.

2. Obtain a Return Materials Authorization (RMA) number from the Juniper Networks Technical Assistance Center (JTAC) as described in "Contacting Customer Support to Obtain a Return Materials Authorization for a QFX Series Device or Component" on page 895.

   NOTE: Do not return any component to Juniper Networks unless you have first obtained an RMA number. Juniper Networks reserves the right to refuse shipments that do not have an RMA. Refused shipments are returned to the customer through collect freight.

3. Pack the device or component for shipping as described in "Packing a QFX3100 Director Device or Component for Shipping" on page 881.

For more information about return and repair policies, see the customer support page at https://www.juniper.net/support/guidelines.html.

Related Documentation

- Powering Off a QFX3100 Director Device on page 559

Returning a QFX3008-I Interconnect Device or Component for Repair or Replacement

If you need to return a QFX3008-I Interconnect device or component to Juniper Networks for repair or replacement, follow this procedure:

1. Determine the serial number of the component. For instructions, see "Locating the Serial Number on a QFX3008-I Interconnect Device or Component" on page 867.

2. Obtain a Return Materials Authorization (RMA) number from Juniper Networks Technical Assistance Center (JTAC) as described in "Contacting Customer Support to Obtain a Return Materials Authorization for a QFX Series Device or Component" on page 895.

   NOTE: Do not return any component to Juniper Networks unless you have first obtained an RMA number. Juniper Networks reserves the right to refuse shipments that do not have an RMA. Refused shipments are returned to the customer through collect freight.

Copyright © 2018, Juniper Networks, Inc.

3. Pack the device or component for shipping as described in "Packing a QFX3008-I Interconnect Device or Component for Shipping" on page 883.

For more information about return and repair policies, see the customer support page at https://www.juniper.net/support/guidelines.html .

Related Documentation

- QFX3008-I Interconnect Device Overview on page 37

Returning a QFX5100 Device or Component for Repair or Replacement

If you need to return a QFX5100 switch or component to Juniper Networks for repair or replacement, follow this procedure:

1. Determine the serial number of the component. For instructions, see "Locating the Serial Number on a QFX5100 Device or Component" on page 868.

2. Obtain a Return Materials Authorization (RMA) number from the Juniper Technical Assistance Center (JTAC) as described in "Contacting Customer Support to Obtain a Return Materials Authorization for a QFX Series Device or Component" on page 895.

   NOTE: **Do not return any component to Juniper Networks unless you have first obtained an RMA number. Juniper Networks reserves the right to refuse shipments that do not have an RMA. Refused shipments are returned to the customer through collect freight.**

3. Pack the switch or component for shipping as described in "Packing a QFX5100 Device or Component for Shipping" on page 885.

For more information about return and repair policies, see the customer support page at https://www.juniper.net/support/guidelines.html.

Related Documentation

- QFX5100 Device Hardware Overview on page 63

Returning a QFX3600 or QFX3600-I Device or Component for Repair or Replacement

If you need to return a QFX3600 or QFX3600-I device or component to Juniper Networks for repair or replacement, follow this procedure:

1. Determine the serial number of the component. For instructions, see "Locating the Serial Number on a QFX3600 or QFX3600-I Device or Component" on page 871.

2. Obtain a Return Materials Authorization (RMA) number from the Juniper Technical Assistance Center (JTAC) as described in "Contacting Customer Support to Obtain a Return Materials Authorization for a QFX Series Device or Component" on page 895.

NOTE: Do not return any component to Juniper Networks unless you have first obtained an RMA number. Juniper Networks reserves the right to refuse shipments that do not have an RMA. Refused shipments are returned to the customer through collect freight.

3. Pack the switch or component for shipping as described in "Packing a QFX3600 or QFX3600-I Device or Component for Shipping" on page 887.

For more information about return and repair policies, see the customer support page at https://www.juniper.net/support/guidelines.html.

Related Documentation

- *QFX3000-M Interconnect Devices Overview*
- QFX3600 Device Overview on page 99

Returning a QFX3500 Device or Component for Repair or Replacement

If you need to return a QFX3500 device or component to Juniper Networks for repair or replacement, follow this procedure:

1. Determine the serial number of the component. For instructions, see "Locating the Serial Number on a QFX3500 Device or Component" on page 872.

2. Obtain a Return Materials Authorization (RMA) number from the Juniper Technical Assistance Center (JTAC) as described in "Contacting Customer Support to Obtain a Return Materials Authorization for a QFX Series Device or Component" on page 895.

   NOTE: Do not return any component to Juniper Networks unless you have first obtained an RMA number. Juniper Networks reserves the right to refuse shipments that do not have an RMA. Refused shipments are returned to the customer through collect freight.

3. Pack the device or component for shipping as described in "Packing a QFX3500 Device or Component for Shipping" on page 889.

For more information about return and repair policies, see the customer support page at https://www.juniper.net/support/guidelines.html.

Related Documentation

- QFX3500 Device Overview on page 115

Copyright © 2018, Juniper Networks, Inc.

Returning an EX4300 Switch or Component for Repair or Replacement

If you need to return an EX4300 switch or hardware component to Juniper Networks for repair or replacement, follow this procedure:

1. Determine the serial number of the component. For instructions, see "Locating the Serial Number on an EX4300 Switch or Component" on page 874.

2. Obtain an Return Materials Authorization (RMA) number from JTAC as described in *Contacting Customer Support to Obtain Return Material Authorization*.

   NOTE: **Do not return any component to Juniper Networks unless you have first obtained an RMA number. Juniper Networks reserves the right to refuse shipments that do not have an RMA. Refused shipments are returned to the customer through collect freight.**

3. Pack the switch or component for shipping as described in "Packing an EX4300 Switch or Component for Shipping" on page 890.

For more information about return and repair policies, see the customer support page at https://www.juniper.net/support/guidelines.html .

Returning an EX4200 Switch or Component for Repair or Replacement

If you need to return a switch or hardware component to Juniper Networks for repair or replacement, follow this procedure:

1. Determine the serial number of the component. For instructions, see "Locating the Serial Number on an EX4200 Switch or Component" on page 880.

2. Obtain an RMA number from JTAC as described in *Contacting Customer Support to Obtain Return Material Authorization*.

   NOTE: **Do not return any component to Juniper Networks unless you have first obtained an RMA number. Juniper Networks reserves the right to refuse shipments that do not have an RMA. Refused shipments are returned to the customer through collect freight.**

3. Pack the switch or component for shipping as described in "Packing an EX4200 Switch or Component for Shipping" on page 893.

For more information about return and repair policies, see the customer support page at https://www.juniper.net/support/guidelines.html .

Copyright © 2018, Juniper Networks, Inc.

Related Documentation

- EX4200 Switches Hardware Overview on page 183

Locating the Serial Number on a QFX3100 Director Device or Component

If you are returning a device or component to Juniper Networks for repair or replacement, you must locate the serial number of the device or component. You must provide the serial number to the Juniper Networks Technical Assistance Center (JTAC) when you contact them to obtain a Return Materials Authorization (RMA). See "Contacting Customer Support to Obtain a Return Materials Authorization for a QFX Series Device or Component" on page 895.

If the device is operational and you can access the command-line interface (CLI), you can list serial numbers for the device and for some components with a CLI command. If you do not have access to the CLI or if the serial number for the component does not appear in the command output, you can locate the serial number ID label on the physical device or component.

NOTE: **If you want to find the serial number on the physical device component, you will need to remove the component from the device chassis, for which you must have the required parts and tools available.**

- Listing the Chassis Serial Number with the CLI on page 866
- Locating the Serial Number ID Label on a QFX3100 Director Device on page 866
- Locating Serial Number ID Labels on FRU Components on page 867

Listing the Chassis Serial Number with the CLI

To list the QFX3100 device serial number from the CLI, use the **show fabric administration inventory director-group status** CLI command:

```
user@device> show fabric administration inventory director-group status
...
Member Device Id/Alias  Status  Role
------ ---------------- ------- ---------
dg0    0281012012000000 online  master

Member Device Id/Alias  Status  Role
------ ---------------- ------- ---------
dg1    0281032012000000 online  backup
...
```

Locating the Serial Number ID Label on a QFX3100 Director Device

The serial number ID label is located on the back of the chassis on a QFX3100 Director device. See Figure 363 on page 867.

 Copyright © 2018, Juniper Networks, Inc.

Figure 363: Location of the Serial Number ID Label on a QFX3100 Director Device

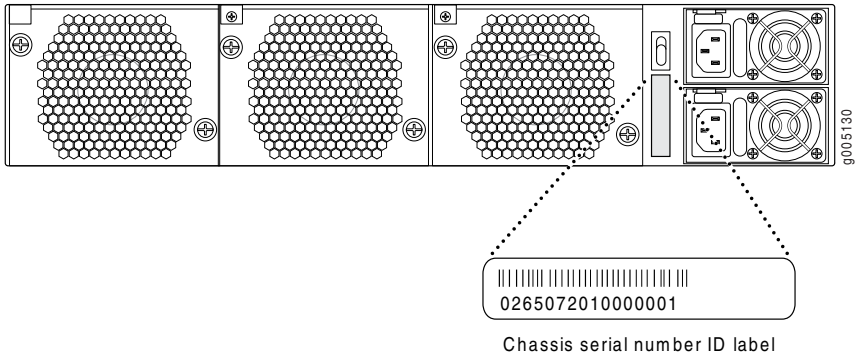

Locating Serial Number ID Labels on FRU Components

The power supplies, fan modules, HDD modules, and network modules are field-replaceable units (FRUs). For most of these FRUs, you must remove the FRU from the device chassis to see the FRU serial number ID label.

- AC power supply—The serial number ID label is on the right side of the AC power supply.
- Fan module—The serial number ID label is on the top of the fan module.
- HDD module—The serial number ID label is on the top of the HDD module.
- Network module—The serial number ID label is on the left of the network module.

Related Documentation

- Returning a QFX3100 Director Device or Component for Repair or Replacement on page 862

Locating the Serial Number on a QFX3008-I Interconnect Device or Component

If you are returning a device or component to Juniper Networks for repair or replacement, you must locate the serial number of the device or component. You must provide the serial number to the Juniper Networks Technical Assistance Center (JTAC) when you contact them to obtain a Return Materials Authorization (RMA). See "Contacting Customer Support to Obtain a Return Materials Authorization for a QFX Series Device or Component" on page 895.

If the device is operational and you can access the command-line interface (CLI), you can list serial numbers for the device and for some components with a CLI command. If you do not have access to the CLI or if the serial number for the component does not appear in the command output, you can locate the serial number ID label on the physical device or component.

NOTE: If you want to find the serial number on the physical device component, you will need to remove the component from the device chassis, for which you must have the required parts and tools available.

1. Listing the Chassis and Component Details with the CLI on page 868

Listing the Chassis and Component Details with the CLI

To list the QFX3008-I Interconnect device and components and their serial numbers, use the **show fabric administration inventory interconnect-devices** ***device-name*** CLI command.

For information about the **show fabric administration inventory interconnect-devices** command, see *show fabric administration inventory interconnect-devices*.

Related Documentation

- Returning a QFX3008-I Interconnect Device or Component for Repair or Replacement on page 862

Locating the Serial Number on a QFX5100 Device or Component

If you are returning a switch or component to Juniper Networks for repair or replacement, you must locate the serial number of the switch or component. You must provide the serial number to the Juniper Networks Technical Assistance Center (JTAC) when you contact them to obtain a Return Materials Authorization (RMA). See "Contacting Customer Support to Obtain a Return Materials Authorization for a QFX Series Device or Component" on page 895.

If the switch is operational and you can access the command-line interface (CLI), you can list serial numbers for the switch and for some components with a CLI command. If you do not have access to the CLI or if the serial number for the component does not appear in the command output, you can locate the serial number ID label on the switch or component.

NOTE: If you want to find the serial number ID label on a component, you need to remove the component from the switch chassis, for which you must have the required parts and tools available.

- Listing the Chassis and Component Details Using the CLI on page 868
- Locating the Chassis Serial Number ID Label on a QFX5100 Switch on page 869
- Locating the Serial Number ID Labels on FRU Components on page 870

Listing the Chassis and Component Details Using the CLI

To list the QFX5100 switch and components and their serial numbers, use the **show chassis hardware** CLI operational mode command. If you are using the QFX5100 switch

Copyright © 2018, Juniper Networks, Inc.

as a Node device in a QFabric system, you must first log in to the switch using the **request component login** CLI operational mode command.

```
user@device> show chassis hardware

Hardware inventory:
Item             Version  Part number  Serial number     Description
Chassis                                EL9270            QFX5100-24Q-2P
Pseudo CB 0
Routing Engine 0          BUILTIN      BUILTIN           QFX Routing Engine
FPC 0            REV 17   750-036931   P5331-C           QFX5100-24Q-2P
  CPU                     BUILTIN      BUILTIN           FPC CPU
  PIC 0                   BUILTIN      BUILTIN           24x 40G-QSFP
Power Supply 0   Rev 04   740-032091   VB02420           QFX3500-48S4Q
Power Supply 1
Fan Tray 1                                               QFX5100 Fan Tray 1, Bac
k to Front Airflow - AFI
Fan Tray 2                                               QFX5100 Fan Tray 2, Bac
k to Front Airflow - AFI
Fan Tray 3                                               QFX5100 Fan Tray 3, Bac
k to Front Airflow - AFI
Fan Tray 4                                               QFX5100 Fan Tray 4, Bac
k to Front Airflow - AFI
Fan Tray 5                                               QFX5100 Fan Tray 5, Bac
k to Front Airflow - AFI
```

NOTE: You must remove the fan module to read the fan serial number from the serial number ID label. The fan module serial number cannot be viewed through the CLI. **Fan Tray 2** refers to the third module from the left, counting from 0.

Locating the Chassis Serial Number ID Label on a QFX5100 Switch

The location for the chassis serial number ID label is product SKU-dependent. On the QFX5100-96S, QFX5100-48S, QFX5100-48SH, QFX5100-48T, and QFX5100-48TH product SKUs, the serial number ID label is located on the left side of the port panel. On legacy switches, or switches with an LCD, the port panel is referred to as the front panel. See Figure 364 on page 869 through Figure 366 on page 870 for examples of where to find the serial number ID. On the QFX5100-24Q, the serial number ID label is located next to the left expansion port on the port panel. See Figure 367 on page 870.

Figure 364: Location of the Serial Number ID Label on a QFX5100-96S Switch

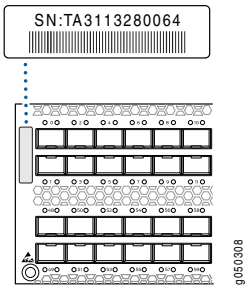

Figure 365: Location of the Serial Number ID Label on QFX5100-48S and QFX5100-48SH Switches

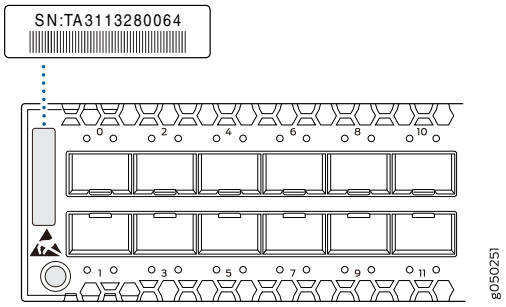

Figure 366: Location of the Serial Number ID Label on QFX5100-48T and QFX5100-48TH Switches

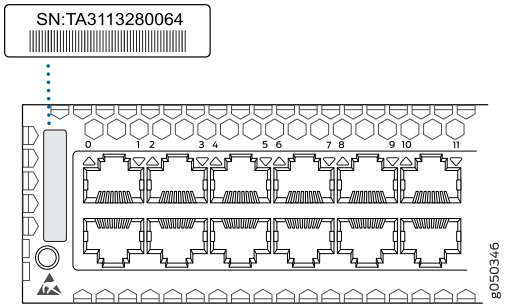

Figure 367: Location of the Serial Number ID Label on a QFX5100-24Q Switch

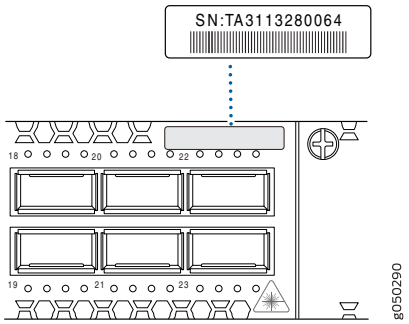

Locating the Serial Number ID Labels on FRU Components

The power supplies, fan module, and expansion modules installed in QFX5100 switches are field-replaceable units (FRUs). For each FRU, you must remove the FRU from the switch chassis to see the FRU serial number ID label.

- AC power supply—The serial number ID label is on the top of the AC power supply.
- Fan module—The serial number ID label is on the top of the fan module.
- Expansion module–The serial number ID label is in the middle of the printed circuit board (PCB).

Copyright © 2018, Juniper Networks, Inc.

Related Documentation

- Returning a QFX5100 Device or Component for Repair or Replacement on page 863

Locating the Serial Number on a QFX3600 or QFX3600-I Device or Component

If you are returning a switch or component to Juniper Networks for repair or replacement, you must locate the serial number of the switch or component. You must provide the serial number to the Juniper Networks Technical Assistance Center (JTAC) when you contact them to obtain a Return Materials Authorization (RMA). See "Contacting Customer Support to Obtain a Return Materials Authorization for a QFX Series Device or Component" on page 895.

If the switch is operational and you can access the command-line interface (CLI), you can list serial numbers for the switch and for some components with a CLI command. If you do not have access to the CLI or if the serial number for the component does not appear in the command output, you can locate the serial number ID label on the device or component.

NOTE: **If you want to find the serial number ID label on a component, you will need to remove the component from the switch chassis, for which you must have the required parts and tools available.**

- Listing the Chassis and Component Details Using the CLI on page 871
- Locating the Chassis Serial Number ID Label on a QFX3600 or QFX3600-I Device on page 872
- Locating the Serial Number ID Labels on FRU Components on page 872

Listing the Chassis and Component Details Using the CLI

To list the QFX3600 or QFX3600-I device and components and their serial numbers, use the **show chassis hardware** CLI operational mode command. For the QFX3600-I Interconnect device, or if you are using the QFX3600 device as a Node device in a QFabric system, you must first log in to the device using the **request component login** CLI operational mode command, or connect directly to the device through the console **CON** port on the front panel.

```
user@device> show chassis hardware
Hardware inventory:
Item             Version  Part number  Serial number     Description
Chassis                                JN00000000        QFX3600
Routing Engine 0          BUILTIN      BUILTIN           QFX Routing Engine
FPC 0            REV 05   750-036931   EE0823            QFX 16x40G Switch
  CPU                     BUILTIN      BUILTIN           FPC CPU
  PIC 0                   BUILTIN      BUILTIN           16x 40G-QSFP+
Power Supply 0   Rev 04   740-032091   UI00690           QFX PS 650W AC
Power Supply 1   Rev 04   740-032091   UI00679           QFX PS 650W AC
Fan Tray 0                                               QFX Fan Tray
Fan Tray 1                                               QFX Fan Tray
Fan Tray 2                                               QFX Fan Tray
```

NOTE: You must remove the fan tray to read the fan tray serial number from the serial number ID label. The fan tray serial number cannot be viewed through the CLI.

See Also •

Locating the Chassis Serial Number ID Label on a QFX3600 or QFX3600-I Device

The chassis serial number ID label is located on a sliding panel to the right of the QSFP+ ports on the front panel of a QFX3600 or QFX3600-I device. See Figure 368 on page 872.

Figure 368: Location of the Serial Number ID Label on a QFX3600 or QFX3600-I Device

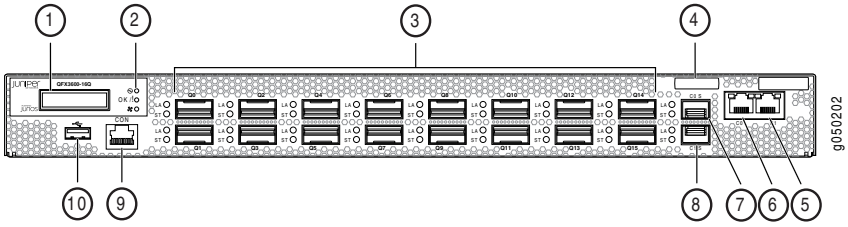

1—LCD panel	6—**C0** management port
2—Chassis status LEDs	7—**COS** management port
3—Access and uplink ports	8—**C1S** management port
4—Chassis serial number label and ESD point	9—Console (**CON**) port
5—**C1** management port	10—USB port

Locating the Serial Number ID Labels on FRU Components

The power supplies and fan trays installed in QFX3600 and QFX3600-I devices are field-replaceable units (FRUs). For each FRU, you must remove the FRU from the device chassis to see the FRU serial number ID label.

- AC power supply—The serial number ID label is on the top of the AC power supply.
- Fan tray—The serial number ID label is on the top of the fan tray.

Related Documentation

- Returning a QFX3600 or QFX3600-I Device or Component for Repair or Replacement on page 863

Locating the Serial Number on a QFX3500 Device or Component

If you are returning a device or component to Juniper Networks for repair or replacement, you must locate the serial number of the device or component. You must provide the serial number to the Juniper Networks Technical Assistance Center (JTAC) when you contact them to obtain a Return Materials Authorization (RMA). See "Contacting Customer

Copyright © 2018, Juniper Networks, Inc.

Support to Obtain a Return Materials Authorization for a QFX Series Device or Component" on page 895.

If the device is operational and you can access the command-line interface (CLI), you can list serial numbers for the device and for some components with a CLI command. If you do not have access to the CLI or if the serial number for the component does not appear in the command output, you can locate the serial number ID label on the device or component.

NOTE: If you want to find the serial number ID label on a component, you need to remove the component from the device chassis, for which you must have the required parts and tools available.

- Listing the Chassis and Component Details Using the CLI on page 873
- Locating the Chassis Serial Number ID Label on a QFX3500 Device on page 873
- Locating the Serial Number ID Labels on FRU Components on page 874

Listing the Chassis and Component Details Using the CLI

To list the QFX3500 device and components and their serial numbers, use the **show chassis hardware** CLI operational mode command. If you are using the QFX3500 device as a Node device in a QFabric system, you must first log in to the device using the **request component login** CLI operational mode command.

```
user@device> show chassis hardware
Hardware inventory:
Item             Version  Part number  Serial number     Description
Chassis                                JN000TEST5        QFX3500
Routing Engine 0          BUILTIN      BUILTIN           QFX Routing Engine
FPC 0            REV 05   750-036931   EE0823            QFX 48x10G 4x40G Switch

  CPU                     BUILTIN      BUILTIN           FPC CPU
  PIC 0                   BUILTIN      BUILTIN           48x 10G-SFP+
  MGMT BRD         REV 08 750-036946   EE0731            QFX3500-MB
Power Supply 0     Rev 04 740-032091   UI00690           QFX PS 650W AC
Power Supply 1     Rev 04 740-032091   UI00679           QFX PS 650W AC
Fan Tray 0                                               QFX Fan Tray
Fan Tray 1                                               QFX Fan Tray
Fan Tray 2                                               QFX Fan Tray
```

NOTE: You must remove the fan tray to read the fan tray serial number from the serial number ID label. The fan tray serial number cannot be viewed through the CLI. **Fan Tray 2** refers to the fan modules located in the management board.

Locating the Chassis Serial Number ID Label on a QFX3500 Device

The chassis serial number ID label is located on a sliding panel to the right of the fan tray on a QFX3500 device. See Figure 369 on page 874.

Figure 369: Location of the Serial Number ID Label on a QFX3500 Device

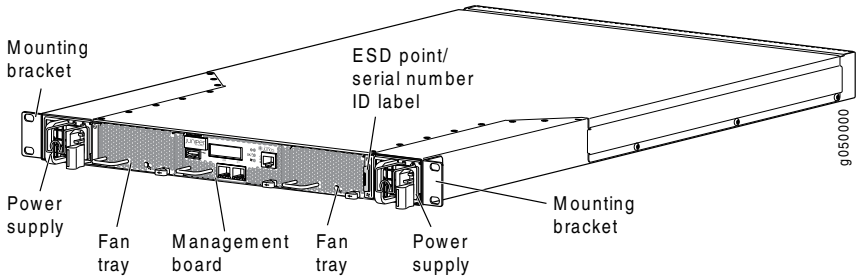

Locating the Serial Number ID Labels on FRU Components

The power supplies, fan trays, and management board installed in QFX3500 devices are field-replaceable units (FRUs). For each FRU, you must remove the FRU from the device chassis to see the FRU serial number ID label.

- AC power supply—The serial number ID label is on the top of the AC power supply.
- Fan tray—The serial number ID label is on the top of the fan tray.
- Management board—The serial number ID label is on the circuit board.

Related Documentation

- Returning a QFX3500 Device or Component for Repair or Replacement on page 864

Locating the Serial Number on an EX4300 Switch or Component

If you are returning a switch or hardware component to Juniper Networks for repair or replacement, you must locate the serial number of the switch or component. You must provide the serial number to the Juniper Networks Technical Assistance Center (JTAC) when you contact them to obtain Return Materials Authorization (RMA).

If the switch is operational and you can access the CLI, you can list serial numbers for the switch and for some components with a CLI command. If you do not have access to the CLI or if the serial number for the component does not appear in the command output, you can locate the serial number ID label on the physical switch or component.

NOTE: **If you want to find the serial number on the physical switch component, you will need to remove the component from the switch chassis, for which you must have the required parts and tools available. See *Installing and Removing EX4300 Switch Hardware Components*.**

- Listing the Switch and Components Details with the CLI on page 875
- Locating the Chassis Serial Number ID Label on an EX4300 Switch on page 876
- Locating the Serial Number ID Labels on FRUs in an EX4300 Switch on page 876

Copyright © 2018, Juniper Networks, Inc.

Listing the Switch and Components Details with the CLI

To list the switch and switch components and their serial numbers, enter the following CLI command:

show chassis hardware

The following output lists the switch components and serial numbers for an EX4300-48P switch:

```
user@switch> show chassis hardware
Hardware inventory:
Item             Version  Part number  Serial number     Description
Chassis                                PD3113060008      EX4300-48P
Routing Engine 0 REV D    650-044930   PD3113060008      EX4300-48P
FPC 0            REV D    650-044930   PD3113060008      EX4300-48P
  CPU                     BUILTIN      BUILTIN           FPC CPU
  PIC 0          REV D    BUILTIN      BUILTIN           48x 10/100/1000 Base-T
  PIC 1          REV D    BUILTIN      BUILTIN           4x 40GE
  PIC 2          REV A0   611-044925   MY3112490109      4x 1G/10G SFP/SFP+
    Xcvr 0       REV 01   740-030658   AD0946A02ZT       SFP+-10G-USR
    Xcvr 1       REV 01   740-030658   AA1212ALZ5E       SFP+-10G-USR
  Power Supply 0 REV 01   740-046871   1EDA2490663       JPSU-1100-AC-AFO-A
  Power Supply 1 REV 01   740-046873   1EDE2430149       JPSU-350-AC-AFO-A
  Fan Tray 0                                            Fan Module, Airflow Out
 (AFO)
  Fan Tray 1                                            Fan Module, Airflow Out
 (AFO)
```

The following output lists the switch components and serial numbers for an EX4300-48MP switch:

```
user@switch> show chassis hardware
Hardware inventory:
Item             Version  Part number  Serial number     Description
Chassis                                XR3617480018      EX4300-48MP
Pseudo CB 0
Routing Engine 0          BUILTIN      BUILTIN           RE-EX4300MP
FPC 0            REV 02   650-078100   XR3617480018      EX4300-48MP
  CPU                     BUILTIN      BUILTIN           FPC CPU
  PIC 0          REV 02   BUILTIN      BUILTIN           24x10M/100M/1G Base-T &
 24x 100M/1G/2.5G/5G/10G Base-T
  PIC 1          REV 02   650-078100   XR3617480018      4x40G QSFP+
  PIC 2          REV      650-080740   XS3617480045      4x10G SFP+
    Xcvr 0       REV 02   740-011613   NT33F2C           SFP-SX
    Xcvr 1       REV 01   740-021308   09T511103777      SFP+-10G-SR
    Xcvr 3       REV 01   740-030658   AA1229AZXZG       SFP+-10G-USR
Power Supply 0   REV 01   740-074873   1F197410083       JPSU-1400W-AC-AFO
Fan Tray 0                                              Fan Module, Airflow Out
 (AFO)
Fan Tray 1                                              Fan Module, Airflow Out
 (AFO)
```

For information about the **show chassis hardware** command, see *show chassis hardware*.

Locating the Chassis Serial Number ID Label on an EX4300 Switch

The serial number ID label is located on the rear panel of the chassis on EX4300 switches. Figure 370 on page 876 shows the location of the serial number ID label on 24-port and 48-port EX4300 switches except EX4300-48MP and EX4300-48MP-S switches. Figure 371 on page 876 shows the location of the serial number ID label on EX4300-48MP and EX4300-48MP-S switches. Figure 372 on page 876 shows the location of the serial number ID label on 32-port EX4300 switches.

Figure 370: Location of the Serial Number ID Label on 24-Port and 48-Port EX4300 Switches Except EX4300-48MP and EX4300-48MP-S Switches

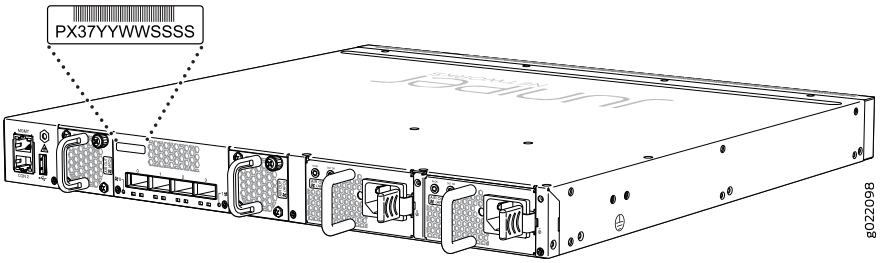

Figure 371: Location of the Serial Number ID Label on EX4300-48MP and EX4300-48MP-S Switches

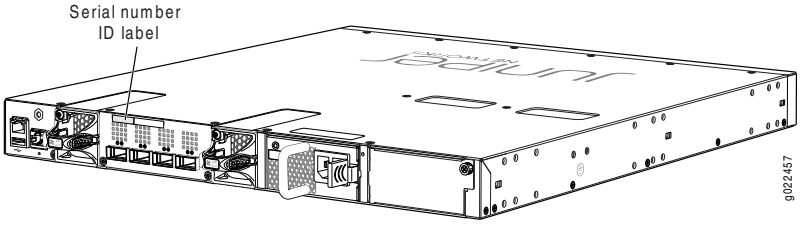

Figure 372: Location of the Serial Number ID Label on 32-Port EX4300 Switches

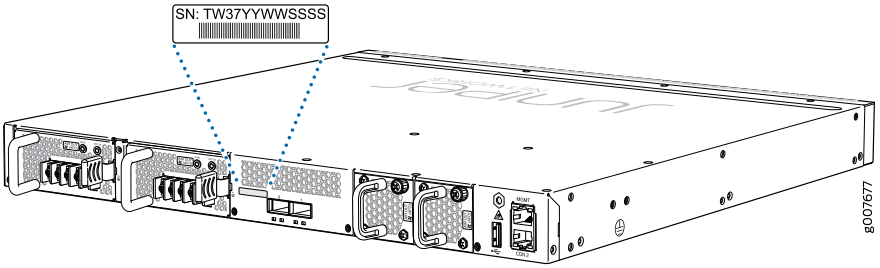

Locating the Serial Number ID Labels on FRUs in an EX4300 Switch

The power supplies, fan modules, and uplink modules, installed in EX4300 switches are field-replaceable units (FRUs).

For each of these FRUs, you must remove the FRU from the switch chassis to see the FRU's serial number ID label.

Copyright © 2018, Juniper Networks, Inc.

- *Power Supply*—The serial number ID label is on the top of the power supply. Figure 373 on page 877 shows the location of the serial number ID label on an AC power supply used in EX4300 switches except EX4300-48MP and EX4300-48MP-S switches, Figure 374 on page 877 shows the location of the serial number ID label on an AC power supply used in EX4300-48MP and EX4300-48MP-S switches, and Figure 375 on page 878 shows the location of the serial number ID label on a DC power supply. EX4300-48MP and EX4300-48MP-S switches do not support DC power supply. See "Removing an AC Power Supply from an EX4300 Switch" on page 681 and *Removing a DC Power Supply from an EX4300 Switch*.

Figure 373: Location of the Serial Number ID Label on an AC Power Supply Used in EX4300 Switches Except EX4300-48MP and EX4300-48MP-S Switches

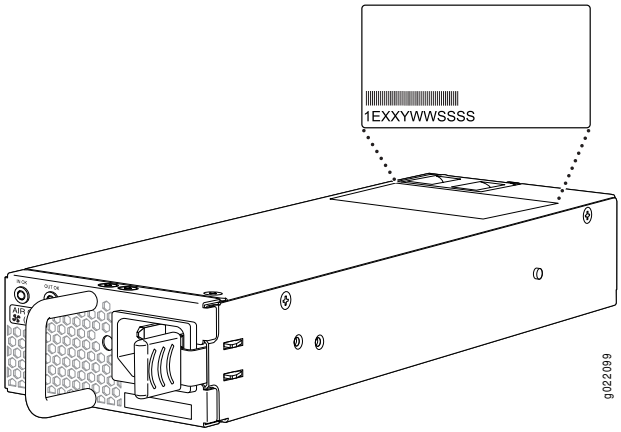

Figure 374: Location of the Serial Number ID Label on an AC Power Supply Used in EX4300-48MP and EX4300-48MP-S Switches

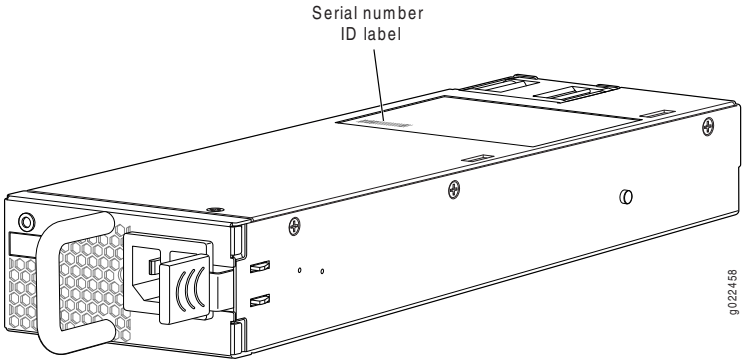

Figure 375: Location of the Serial Number ID Label on a DC Power Supply Used in EX4300 Switches

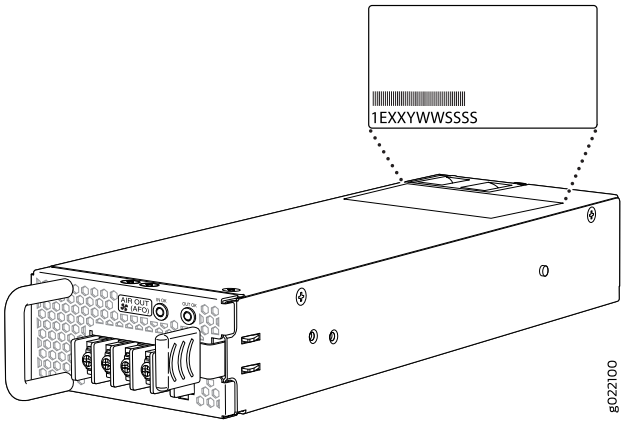

- *Fan module*—Figure 376 on page 878 shows the location of the serial number ID label on the fan module for EX4300 switches except EX4300-48MP and EX4300-48MP-S switches. Figure 377 on page 878 shows the location of the serial number ID label on the fan module for EX4300-48MP and EX4300-48MP-S switches. See "Removing a Fan Module from an EX4300 Switch" on page 690.

Figure 376: Location of the Serial Number ID Label on the Fan Module Used in an EX4300 Switches Except EX4300-48MP and EX4300-48MP-S Switches

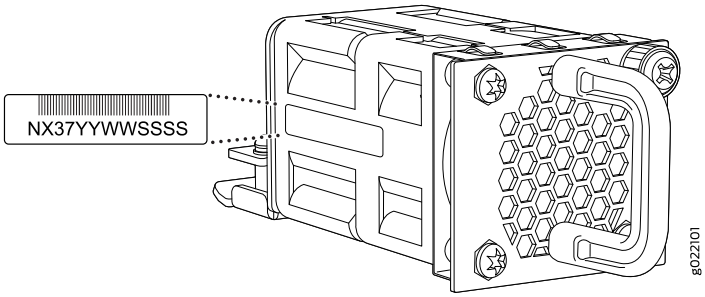

Figure 377: Location of the Serial Number ID Label on the Fan Module Used in an EX4300-48MP and EX4300-48MP-S Switches

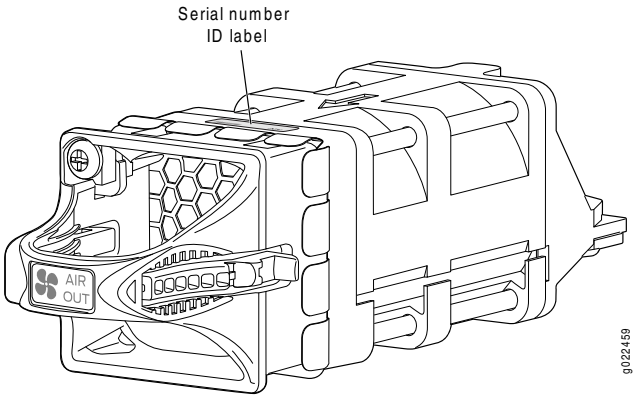

Copyright © 2018, Juniper Networks, Inc.

- *Uplink modules*
  - EX4300 switches except EX4300-48MP and EX4300-48MP-S switches—Figure 378 on page 879 shows the location of the serial number ID label on the QSFP+ uplink module, Figure 379 on page 879 shows the location of the serial number ID label on the 4-port SFP+ uplink module, and Figure 380 on page 879 shows the location of the serial number ID label on the 8-port SFP+ uplink module.
  - EX4300-48MP and EX4300-48MP-S switches—Figure 381 on page 880 shows the location of the serial number ID label on the 4-port 10GbE uplink module for EX4300-switches except EX4300-48MP and EX4300-48MP-S switches.

See "Removing an Uplink Module from an EX4300 Switch" on page 685.

Figure 378: Location of the Serial Number ID Label on the QSFP+ Uplink Module

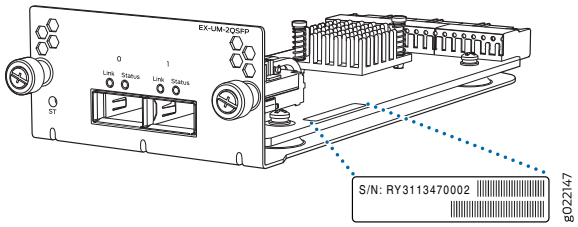

Figure 379: Location of the Serial Number ID Label on the 4-Port SFP+ Uplink Module for EX4300 Switches Except EX4300-48MP and EX4300-48MP-S Switches

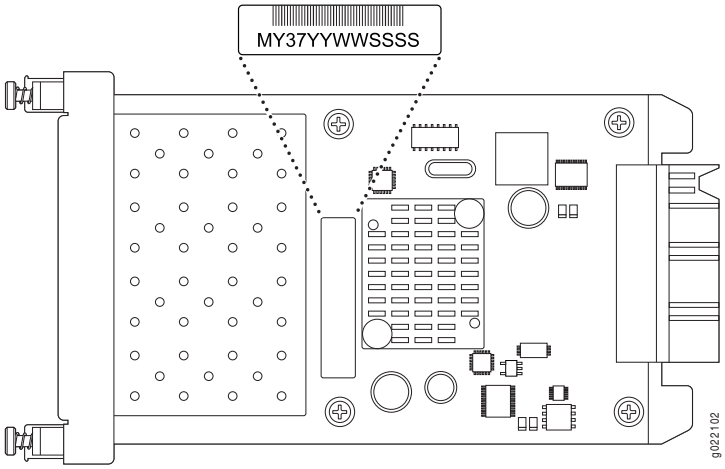

Figure 380: Location of the Serial Number ID Label on the 8-Port SFP+ Uplink Module

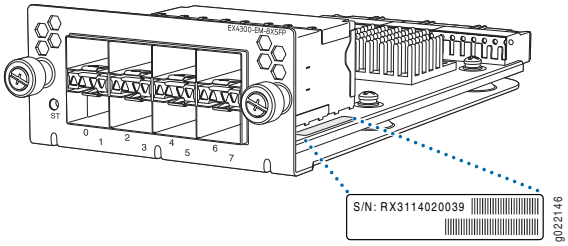

Figure 381: Location of the Serial Number ID Label on the 4-Port 10GbE Uplink Module for EX4300-48MP Switches

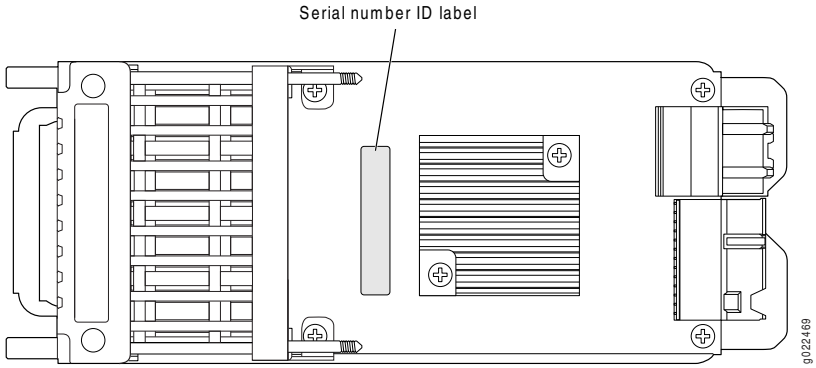

Locating the Serial Number on an EX4200 Switch or Component

If you are returning a switch or hardware component to Juniper Networks for repair or replacement, you must locate the serial number of the switch or component. You must provide the serial number to the Juniper Networks Technical Assistance Center (JTAC) when you contact them to obtain Return Materials Authorization (RMA).

If the switch is operational and you can access the CLI, you can list serial numbers for the switch and for some components with a CLI command. If you do not have access to the CLI or if the serial number for the component does not appear in the command output, you can locate the serial number ID label on the physical switch or component (see Figure 382 on page 881).

NOTE: If you want to find the serial number on the physical switch component, you will need to remove the component from the switch chassis, for which you must have the required parts and tools available.

- Listing the Switch and Components Details with the CLI on page 880
- Locating the Chassis Serial Number ID Label on an EX4200 Switch on page 881
- Locating the Serial Number ID Labels on FRUs in an EX4200 Switch on page 881

Listing the Switch and Components Details with the CLI

To list the switch and switch components and their serial numbers, enter the following CLI command:

```
user@switch> show chassis hardware
Hardware inventory:
Item             Version  Part number  Serial number     Description
Chassis                               BM0208327733      EX4200-24T
Routing Engine 0 REV 11   750-021256   BM0208327733      EX4200-24T, 8 POE
FPC 0            REV 11   750-021256   BM0208327733      EX4200-24T, 8 POE
  CPU                     BUILTIN      BUILTIN           FPC CPU
```


Copyright © 2018, Juniper Networks, Inc.

```
  PIC 0                    BUILTIN      BUILTIN           24x 10/100/1000 Base-T
  PIC 1          REV 03B   711-021270   AR0208162285      4x GE SFP
Power Supply 0   REV 03    740-020957   AT0508346354      PS 320W AC
Fan Tray                                                  Fan Tray
```

For information about the **show chassis hardware** command, see *show chassis hardware*.

Locating the Chassis Serial Number ID Label on an EX4200 Switch

EX4200 switches have serial number ID labels located on the rear panel of the chassis (see Figure 382 on page 881).

Figure 382: Location of the Serial Number ID Label on an EX4200 Switch

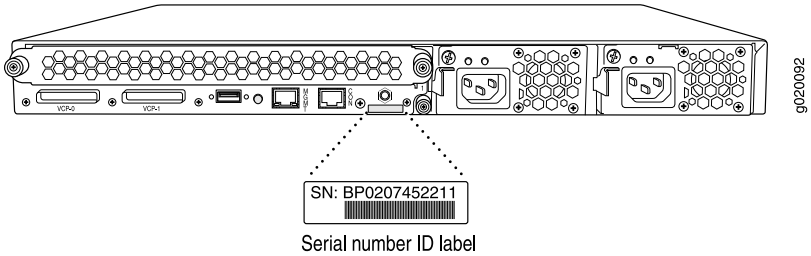

Locating the Serial Number ID Labels on FRUs in an EX4200 Switch

The power supplies, fan trays, and uplink modules installed in EX Series switches are field-replaceable units (FRUs).

For each of these FRUs, you must remove the FRU from the switch chassis to see the FRU's serial number ID label.

- **Power Supply**—The serial number ID label is on the top of the power supply. See "Removing a Power Supply from an EX4200 Switch" on page 695.
- **Fan tray**—The serial number ID label is on the back of the fan tray. See "Installing a Fan Tray in an EX4200 Switch" on page 705.
- **Uplink module**—The serial number ID label is on the circuit board. See "Removing an Uplink Module from an EX4200 Switch" on page 699.

Related Documentation

- *Contacting Customer Support to Obtain Return Material Authorization*
- Returning an EX4200 Switch or Component for Repair or Replacement on page 865

Packing a QFX3100 Director Device or Component for Shipping

If you are returning a QFX3100 Director device or component to Juniper Networks for repair or replacement, pack the item as described in this topic.

Before you begin packing QFX3100 Director device or component, ensure that you have:

- Taken the necessary precautions to prevent ESD damage (see "Prevention of Electrostatic Discharge Damage" on page 360).

- Retrieved the original shipping carton and packing materials. Contact your JTAC representative if you do not have these materials, to learn about approved packing materials. See "Contacting Customer Support to Obtain a Return Materials Authorization for a QFX Series Device or Component" on page 895.

Ensure that you have the following parts and tools available:

- Antistatic bag, one for each component
- Electrostatic discharge (ESD) grounding strap
- Phillips (+) screwdriver, number 2

- Packing a QFX3100 Director Device for Shipping on page 882
- Packing QFX3100 Director Device Components for Shipping on page 883

Packing a QFX3100 Director Device for Shipping

To pack a QFX3100 Director device for shipping:

1. Attach the grounding strap to your bare wrist and to a site ESD point.
2. Power down the device. See "Powering Off a QFX3100 Director Device" on page 559.
3. Disconnect power from the device by performing one of the following:
   - If the power source outlet has a power switch, set it to the OFF (O) position.
   - If the power source outlet does not have a power switch, gently pull out the male end of the power cord connected to the power source outlet.
4. Remove the cables that connect the device to all external devices.
5. Have one person support the weight of the device while another person unscrews and removes the mounting screws. Use the Phillips (+) screwdriver, number 2 to remove the screws.
6. Remove the device from the rack or cabinet (see "Chassis Lifting Guidelines for a QFX3100 Director Device" on page 338) and place the device in an antistatic bag.
7. Place the device in the shipping carton.
8. Place the packing foam on top of and around the device.
9. If you are returning accessories or FRUs with the device, pack them as instructed in "Packing QFX3100 Director Device Components for Shipping" on page 883.
10. Replace the accessory box on top of the packing foam.

Copyright © 2018, Juniper Networks, Inc.

11. Close the top of the cardboard shipping box and seal it with packing tape.

12. Write the RMA number on the exterior of the box to ensure proper tracking.

Packing QFX3100 Director Device Components for Shipping

CAUTION: **Do not stack device components. Return individual components in separate boxes if they do not fit together on one level in the shipping box.**

To pack and ship QFX3100 Director device components:

- Place individual FRUs in antistatic bags.
- Ensure that the components are adequately protected with packing materials and packed so that the pieces are prevented from moving around inside the carton.
- Close the top of the cardboard shipping box and seal it with packing tape.
- Write the RMA number on the exterior of the box to ensure proper tracking.

Related Documentation

- Returning a QFX3100 Director Device or Component for Repair or Replacement on page 862

Packing a QFX3008-I Interconnect Device or Component for Shipping

If you are returning a QFX3008-I Interconnect device or component to Juniper Networks for repair or replacement, pack the item as described in this topic.

Before you begin packing a QFX3008-I Interconnect device or component, ensure that you have:

- Taken the necessary precautions to prevent ESD damage (see "Prevention of Electrostatic Discharge Damage" on page 360).
- Retrieved the original shipping carton and packing materials. Contact your Juniper Networks Technical Assistance Center (JTAC) representative if you do not have these materials, to learn about approved packing materials. See "Contacting Customer Support to Obtain a Return Materials Authorization for a QFX Series Device or Component" on page 895.

Ensure that you have the following parts and tools available:

- Antistatic bag, one for each component
- Electrostatic discharge (ESD) grounding strap
- Phillips (+) screwdriver, number 2

1. Packing a QFX3008-I Interconnect Device for Shipping on page 884
2. Packing QFX3008-I Interconnect Device Components for Shipping on page 885

Packing a QFX3008-I Interconnect Device for Shipping

If you need to transport the device to another location or return the device to Juniper Networks, you need to pack the device securely in its original packaging to prevent damage during transportation.

Before you pack the device:

1. Power off the device. See "Powering Off a QFX3008-I Interconnect Device" on page 562.

2. Remove all wires, plugs, and power cords from the device.

Leave components that came installed in the device in the chassis.

Ensure that you have the following parts and tools available to pack the device:

- Phillips (+) screwdriver, number 2
- A 5/16-in. open-end or socket wrench to install the bracket bolts on the shipping pallet
- The original device packing material (wooden pallet, cardboard box, accessory box and its contents, foam padding, and brackets and bracket bolts for attaching the chassis to the pallet)
- Electrostatic discharge (ESD) grounding strap

The QFX3008-I Interconnect device is shipped in a cardboard box that has a two-layer wooden pallet base with foam cushioning between the layers. The device chassis is bolted to the pallet base with four brackets, two on each side of the chassis.

CAUTION: **The device is maximally protected inside the shipping box. Pack the device only in its original shipping box, securely bolted to the original wooden shipping pallet.**

Do not pack the device in anything except its original container, or the device might be damaged in transit.

To pack the device:

1. Move the wooden pallet and packing material to a staging area as close to the device as possible. Make sure there is enough space to move the chassis from the rack or cabinet to the wooden pallet.

2. Remove the device from the rack or cabinet. See "Removing a QFX3008-I Interconnect Device from a Rack or Cabinet" on page 576.

   Move the chassis to the shipping pallet (see "Chassis Lifting Guidelines for a QFX3008-I Interconnect Device" on page 338). The pallet is marked to allow you to determine which direction the chassis should face.

 Copyright © 2018, Juniper Networks, Inc.

3. Use the 5/16-in. open-end or socket wrench and number 2 Phillips screwdriver to install the four sets of brackets and bolts that secure the chassis to the wooden pallet.

4. Remove the adjustable mounting brackets from the rack or cabinet and place them in the box.

5. Slide the plastic cover over the device chassis. The plastic cover is part of the device's original packing materials.

6. Replace the foam padding on top of the chassis.

7. Place the power cords in the box.

8. Place the accessory box in its slot in the foam padding. See "Parts Inventory (Packing List) for a QFX3008-I Interconnect Device" on page 391 to verify that you have included all the proper contents of the accessory box.

9. Slide the cardboard box over the chassis and secure it to the wooden pallet.

10. Write the Return Materials Authorization (RMA) number on the exterior of the box to ensure proper tracking.

Packing QFX3008-I Interconnect Device Components for Shipping

CAUTION: **Do not stack device components. Return individual components in separate boxes if they do not fit together on one level in the shipping box.**

To pack and ship QFX3008-I Interconnect device components:

- Place individual FRUs in antistatic bags.
- Ensure that the components are adequately protected with packing materials and packed so that the pieces are prevented from moving around inside the carton.
- Close the top of the cardboard shipping box and seal it with packing tape.
- Write the RMA number on the exterior of the box to ensure proper tracking.

Related Documentation

- Returning a QFX3008-I Interconnect Device or Component for Repair or Replacement on page 862

Packing a QFX5100 Device or Component for Shipping

If you are returning a QFX5100 switch or component to Juniper Networks for repair or replacement, pack the item as described in this topic.

Before you pack a QFX5100 switch or component:

- Ensure that you have taken the necessary precautions to prevent electrostatic discharge (ESD) damage. See "Prevention of Electrostatic Discharge Damage" on page 360.
- Retrieve the original shipping carton and packing materials. Contact your JTAC representative if you do not have these materials, to learn about approved packing materials. See "Contacting Customer Support to Obtain a Return Materials Authorization for a QFX Series Device or Component" on page 895.

Ensure that you have the following parts and tools available:

- ESD grounding strap.
- Antistatic bag, one for each component.
- If you are returning the chassis, an appropriate screwdriver for the mounting screws used on your rack or cabinet.

- Packing a QFX5100 Switch for Shipping on page 886
- Packing QFX5100 Switch Components for Shipping on page 887

Packing a QFX5100 Switch for Shipping

To pack a QFX5100 switch for shipping:

1. Power down the switch and remove the power cables. See *Powering Off a QFX5100 Device*.
2. Remove the cables that connect the QFX5100 switch to all external devices.
3. Remove all field-replaceable units (FRUs) from the switch.
4. Have one person support the weight of the switch while another person unscrews and removes the mounting screws.
5. Remove the switch from the rack or cabinet (see "Chassis Lifting Guidelines for a QFX5100 Device" on page 339) and place the switch in an antistatic bag.
6. Place the switch in the shipping carton.
7. Place the packing foam on top of and around the switch.
8. If you are returning accessories or FRUs with the switch, pack them as instructed in "Packing QFX5100 Switch Components for Shipping" on page 887.
9. Replace the accessory box on top of the packing foam.

Copyright © 2018, Juniper Networks, Inc.

10. Close the top of the cardboard shipping box and seal it with packing tape.

11. Write the RMA number on the exterior of the box to ensure proper tracking.

Packing QFX5100 Switch Components for Shipping

CAUTION: **Do not stack switch components. Return individual components in separate boxes if they do not fit together on one level in the shipping box.**

To pack and ship QFX5100 switch components:

- Place individual FRUs in antistatic bags.
- Ensure that the components are adequately protected with packing materials and packed so that the pieces are prevented from moving around inside the carton.
- Close the top of the cardboard shipping box and seal it with packing tape.
- Write the RMA number on the exterior of the box to ensure proper tracking.

Related Documentation

- Returning a QFX5100 Device or Component for Repair or Replacement on page 863

Packing a QFX3600 or QFX3600-I Device or Component for Shipping

If you are returning a QFX3600 or QFX3600-I device or component to Juniper Networks for repair or replacement, pack the item as described in this topic.

Before you pack a QFX3600 or QFX3600-I device or component:

- Ensure that you have taken the necessary precautions to prevent electrostatic discharge (ESD) damage. See "Prevention of Electrostatic Discharge Damage" on page 360.
- Retrieve the original shipping carton and packing materials. Contact your JTAC representative if you do not have these materials, to learn about approved packing materials. See "Contacting Customer Support to Obtain a Return Materials Authorization for a QFX Series Device or Component" on page 895.

Ensure that you have the following parts and tools available:

- ESD grounding strap.
- Antistatic bag, one for each component.
- If you are returning the chassis, an appropriate screwdriver for the mounting screws used on your rack or cabinet.

- Packing a QFX3600 or QFX3600-I Device for Shipping on page 888
- Packing QFX3600 or QFX3600-I Device Components for Shipping on page 888

Packing a QFX3600 or QFX3600-I Device for Shipping

To pack a QFX3600 or QFX3600-I device for shipping:

1. Power down the device and remove the power cables. See *Powering Off a QFX3600 Device*.
2. Remove the cables that connect the QFX3600 or QFX3600-I device to all external devices.
3. Remove all field-replaceable units (FRUs) from the device.
4. Have one person support the weight of the device while another person unscrews and removes the mounting screws.
5. Remove the device from the rack or cabinet (see "Chassis Lifting Guidelines for a QFX3600 or QFX3600-I Device" on page 340) and place the device in an antistatic bag.
6. Place the device in the shipping carton.
7. Place the packing foam on top of and around the device.
8. If you are returning accessories or FRUs with the device, pack them as instructed in "Packing QFX3600 or QFX3600-I Device Components for Shipping" on page 888.
9. Replace the accessory box on top of the packing foam.
10. Close the top of the cardboard shipping box and seal it with packing tape.
11. Write the RMA number on the exterior of the box to ensure proper tracking.

Packing QFX3600 or QFX3600-I Device Components for Shipping

CAUTION: **Do not stack device components. Return individual components in separate boxes if they do not fit together on one level in the shipping box.**

To pack and ship QFX3600 or QFX3600-I device components:

- Place individual FRUs in antistatic bags.
- Ensure that the components are adequately protected with packing materials and packed so that the pieces are prevented from moving around inside the carton.

Copyright © 2018, Juniper Networks, Inc.

- Close the top of the cardboard shipping box and seal it with packing tape.
- Write the RMA number on the exterior of the box to ensure proper tracking.

Related Documentation

- Returning a QFX3600 or QFX3600-I Device or Component for Repair or Replacement on page 863

Packing a QFX3500 Device or Component for Shipping

If you are returning a QFX3500 device or component to Juniper Networks for repair or replacement, pack the item as described in this topic.

Before you pack a QFX3500 device or component:

- Ensure that you have taken the necessary precautions to prevent electrostatic discharge (ESD) damage. See "Prevention of Electrostatic Discharge Damage" on page 360.
- Retrieve the original shipping carton and packing materials. Contact your JTAC representative if you do not have these materials, to learn about approved packing materials. See "Contacting Customer Support to Obtain a Return Materials Authorization for a QFX Series Device or Component" on page 895.

Ensure that you have the following parts and tools available:

- ESD grounding strap.
- Antistatic bag, one for each component.
- If you are returning the chassis, an appropriate screwdriver for the mounting screws used on your rack or cabinet.

- Packing a QFX3500 Device for Shipping on page 889
- Packing QFX3500 Device Components for Shipping on page 890

Packing a QFX3500 Device for Shipping

To pack a QFX3500 device for shipping:

1. Power down the device and remove the power cables. See *Powering Off a QFX3500 Device*.
2. Remove the cables that connect the QFX3500 device to all external devices.
3. Remove all field-replaceable units (FRUs) from the device.
4. Have one person support the weight of the device while another person unscrews and removes the mounting screws.
5. Remove the device from the rack or cabinet (see "Chassis Lifting Guidelines for a QFX3500 Device" on page 340) and place the device in an antistatic bag.

6. Place the device in the shipping carton.
7. Place the packing foam on top of and around the device.
8. If you are returning accessories or FRUs with the device, pack them as instructed in "Packing QFX3500 Device Components for Shipping" on page 890.
9. Replace the accessory box on top of the packing foam.
10. Close the top of the cardboard shipping box and seal it with packing tape.
11. Write the RMA number on the exterior of the box to ensure proper tracking.

Packing QFX3500 Device Components for Shipping

CAUTION: **Do not stack device components. Return individual components in separate boxes if they do not fit together on one level in the shipping box.**

To pack and ship QFX3500 device components:

- Place individual FRUs in antistatic bags.
- Ensure that the components are adequately protected with packing materials and packed so that the pieces are prevented from moving around inside the carton.
- Close the top of the cardboard shipping box and seal it with packing tape.
- Write the RMA number on the exterior of the box to ensure proper tracking.

Related Documentation

- Returning a QFX3500 Device or Component for Repair or Replacement on page 864

Packing an EX4300 Switch or Component for Shipping

If you are returning an EX4300 switch or component to Juniper Networks for repair or replacement, pack the item as described in this topic.

Before you begin packing the switch or component, ensure you have:

- Followed all the steps listed in *Contacting Customer Support to Obtain Return Material Authorization*.
- Retrieved the original shipping carton and packing materials. Contact your JTAC representative if you do not have these materials, to learn about approved packing materials. See *Contacting Customer Support to Obtain Return Material Authorization*.

Copyright © 2018, Juniper Networks, Inc.

- Ensure you understand how to prevent electrostatic discharge (ESD) damage. See "Prevention of Electrostatic Discharge Damage" on page 360.

1. Packing an EX4300 Switch for Shipping on page 891
2. Packing EX4300 Switch Components for Shipping on page 892

Packing an EX4300 Switch for Shipping

If you need to transport the switch to another location or return the switch to Juniper Networks, you need to pack the switch securely in its original packaging to prevent damage during transportation.

Before you pack the switch:

1. On the console or other management device connected to the switch, enter the CLI operational mode and issue the following command to shut down the switch software:

   ```
   user@switch> request system halt
   ```

   Wait until a message appears on the console confirming that the operating system has halted.

2. Disconnect power from the switch by performing one of the following:
   - If the power source outlet has a power switch, set it to the OFF (**O**) position.
   - If the power source outlet does not have a power switch, gently pull out the male end of the power cord connected to the power source outlet.
3. Remove the cables that connect the switch to all external devices. See *Disconnecting a Fiber-Optic Cable*.
4. Remove all optical transceivers installed in the switch. See *Removing a Transceiver*.

Ensure that you have the following parts and tools available to pack the switch:

- Phillips (+) screwdriver, number 2
- The original switch packing material (cardboard box, accessory box and its contents, and foam padding)
- ESD grounding strap
- Antistatic bag

CAUTION: **Do not pack the switch in anything except its original container or the switch might be damaged in transit.**

To pack the switch:

1. If the switch is installed in a rack or cabinet, have one person support the weight of the switch while another person unscrews and removes the mounting screws.
2. Remove the switch from the rack or cabinet and place the switch on a flat, stable surface.
3. Use the screwdriver to remove the rack-mounting brackets from the switch chassis.
4. Place the switch in an antistatic bag.
5. Place the bottom portion of the packaging foam in the shipping carton.
6. Place the switch inside the cavity in the bottom packaging foam.
7. Place the top portion of the packaging foam on top of the switch.
8. If you are returning accessories or field-replaceable units (FRUs) with the switch, pack them as instructed in "Packing EX4300 Switch Components for Shipping" on page 892.
9. Place the accessory box vertically by the rear end of the chassis in the shipping carton.
10. Close the top of the cardboard shipping box and seal it with packing tape.
11. Write the RMA number on the exterior of the box to ensure proper tracking.

Packing EX4300 Switch Components for Shipping

To pack the switch components, follow the instructions here.

Ensure that you have the following parts and tools available:

- Antistatic bag, one for each component
- ESD grounding strap

CAUTION: **Do not stack switch components. Return individual components in separate boxes if they do not fit together on one level in the shipping box.**

To pack the switch components:

- Place individual components in antistatic bags.
- Use the original packing materials if they are available. If the original packing materials are not available, ensure the component is adequately packed to prevent damage

 Copyright © 2018, Juniper Networks, Inc.

during transit. The packing material you use must be able to support the weight of the component.

- Ensure that the components are adequately protected by wrapping them well with packing materials. Pack the component in an oversized box (if the original box is not available) with extra packing material around the unit so that the component is prevented from moving around inside the box.
- Securely tape the box closed.
- Write the RMA number on the exterior of the box to ensure proper tracking.

Packing an EX4200 Switch or Component for Shipping

If you are returning an EX4200 switch or component to Juniper Networks for repair or replacement, pack the item as described in this topic.

Before you begin packing the switch or component:

- Ensure that you have retrieved the original shipping carton and packing materials. Contact your JTAC representative if you do not have these materials, to learn about approved packing materials. See *Contacting Customer Support to Obtain Return Material Authorization*.

Ensure that you have the following parts and tools available:

- Antistatic bag, one for each switch or component
- Phillips (+) screwdriver, number 2

- Packing an EX4200 Switch for Shipping on page 893
- Packing EX4200 Switch Components for Shipping on page 894

Packing an EX4200 Switch for Shipping

To pack a switch for shipping:

1. On the console or other management device connected to the switch (to the master switch in a Virtual Chassis configuration), enter the CLI operational mode and issue the following command to shut down the switch software:

   ```
   user@switch> request system halt
   ```

   Wait until a message appears on the console confirming that the operating system has halted.

2. Disconnect power from the switch by performing one of the following:
   - If the power source outlet has a power switch, set it to the OFF (0) position.
   - If the power source outlet does not have a power switch, gently pull out the male end of the power cord connected to the power source outlet.

3. Remove the cables that connect the switch to all external devices. See *Disconnecting a Fiber-Optic Cable*.

4. Remove all field-replaceable units (FRUs) from the switch.

5. If the switch is installed on a wall, rack, or cabinet, have one person support the weight of the switch while another person unscrews and removes the mounting screws.

6. Remove the switch from the wall, rack, cabinet, or desk and place the switch in an antistatic bag.

7. Place the switch in the shipping carton.

8. Place the packing foam on top of and around the switch.

9. If you are returning accessories or FRUs with the switch, pack them as instructed in the following section.

10. Replace the accessory box on top of the packing foam.

11. Close the top of the cardboard shipping box and seal it with packing tape.

12. Write the RMA number on the exterior of the box to ensure proper tracking.

Packing EX4200 Switch Components for Shipping

CAUTION: **Do not stack switch components. Return individual components in separate boxes if they do not fit together on one level in the shipping box.**

To pack and ship switch components:

- Place individual boards in antistatic bags.
- Ensure that the components are adequately protected with packing materials and packed so that the pieces are prevented from moving around inside the carton.
- Close the top of the cardboard shipping box and seal it with packing tape.
- Write the RMA number on the exterior of the box to ensure proper tracking.

Related Documentation

- Returning an EX4200 Switch or Component for Repair or Replacement on page 865
- Installing a Fan Tray in an EX4200 Switch on page 705
- Removing a Power Supply from an EX4200 Switch on page 695
- Removing an Uplink Module from an EX4200 Switch on page 699

Copyright © 2018, Juniper Networks, Inc.

- *Removing a Transceiver*

Contacting Customer Support to Obtain a Return Materials Authorization for a QFX Series Device or Component

If you are returning a QFX Series device or component to Juniper Networks for repair or replacement, you must first obtain a Return Materials Authorization (RMA) from the Juniper Networks Technical Assistance Center (JTAC).

After locating the serial number of the device or component you want to return, open a case with Juniper Networks Technical Assistance Center (JTAC) on the Web or by telephone.

For instructions on locating the serial number of the device or component you want to return, see the following device instructions:

- Locating the Serial Number on a QFX3008-I Interconnect Device or Component on page 867
- Locating the Serial Number on a QFX3100 Director Device or Component on page 866
- Locating the Serial Number on a QFX3500 Device or Component on page 872
- Locating the Serial Number on a QFX3600 or QFX3600-I Device or Component on page 871
- Locating the Serial Number on a QFX5100 Device or Component on page 868
- *Locating the Serial Number on a QFX5110 Device or Component*
- *Locating the Serial Number on a QFX5200 Device or Component*
- *Locating the Serial Number on a QFX10000 Switch or Component*
- *Locating the Serial Number on a QFX10002 or Component*

Before you request an RMA from JTAC, be prepared to provide the following information:

- Your existing case number, if you have one
- Serial number of the component
- Your name, organization name, telephone number, fax number, and shipping address
- Details of the failure or problem
- Type of activity being performed on the device when the problem occurred
- Configuration data displayed by one or more **show** commands

You can contact JTAC 24 hours a day, seven days a week on the Web or by telephone:

- Case Manager at CSC: https://www.juniper.net/cm/
- Telephone: +1-888-314-JTAC (+1-888-314-5822), toll-free in the USA, Canada, and Mexico

NOTE: For international or direct-dial options in countries without toll-free numbers, see https://www.juniper.net/support/requesting-support.html.

If you are contacting JTAC by telephone, enter your 11-digit case number followed by the pound (#) key for an existing case, or press the star (*) key to be routed to the next available support engineer.

The support representative validates your request and issues an RMA number for return of the component.

Related Documentation

- Returning a QFX3008-I Interconnect Device or Component for Repair or Replacement on page 862
- Returning a QFX3100 Director Device or Component for Repair or Replacement on page 862
- Returning a QFX3500 Device or Component for Repair or Replacement on page 864
- Returning a QFX3600 or QFX3600-I Device or Component for Repair or Replacement on page 863
- Returning a QFX5100 Device or Component for Repair or Replacement on page 863
- *Returning a QFX5110 or Component for Repair or Replacement*
- *Returning a QFX5200 or Component for Repair or Replacement*
- *Returning a QFX10002 or Component for Repair or Replacement*
- *Returning a QFX10000 Switch or Component for Repair or Replacement*

Copyright © 2018, Juniper Networks, Inc.

CHAPTER 59

Alarms and System Log Messages

- Understanding Alarms on page 897
- Chassis Alarm Messages on a QFX3008-I Interconnect Device on page 898
- Chassis Alarm Messages on a QFX3600 or QFX3600-I Device on page 902
- Chassis Alarm Messages on a QFX3500 Device on page 905
- Interface Alarm Messages on page 908
- Understanding Alarm Types and Severity Levels on EX Series Switches on page 908
- Checking Active Alarms with the J-Web Interface on page 910
- Monitoring System Log Messages on page 911

Understanding Alarms

The QFX Series, OCX Series, and EX4600 switches support different alarm types and severity levels. Table 244 on page 897 provides a list of alarm terms and definitions that may help you in monitoring the device.

Table 244: Alarm Terms and Definitions

Term	Definition
Alarm	Signal alerting you to conditions that might prevent normal operation. On the device, alarm indicators might include the LCD panel and LEDs on the device. The LCD panel (if present on the device) displays the chassis alarm message count. Blinking amber LEDs indicate yellow alarm conditions for chassis components.
Alarm condition	Failure event that triggers an alarm.

Alarm severity levels	Seriousness of the alarm. The level of severity can be either major (red) or minor (yellow).
	• Major (red)—Indicates a critical situation on the device that has resulted from one of the following conditions. A red alarm condition requires immediate action.
	  ◦ One or more hardware components have failed.
	  ◦ One or more hardware components have exceeded temperature thresholds.
	  ◦ An alarm condition configured on an interface has triggered a critical warning.
	• Minor (yellow or amber)—Indicates a noncritical condition on the device that, if left unchecked, might cause an interruption in service or degradation in performance. A yellow alarm condition requires monitoring or maintenance. For example, a missing rescue configuration generates a yellow system alarm.

Copyright © 2018, Juniper Networks, Inc.

Table 244: Alarm Terms and Definitions (continued)

Term	Definition
Alarm types	Alarms include the following types: • Chassis alarm—Predefined alarm triggered by a physical condition on the device such as a power supply failure or excessive component temperature. • Interface alarm—Alarm you configure to alert you when an interface link is down. Applies to **ethernet**, **fibre-channel**, and **management-ethernet** interfaces. You can configure a red (major) or yellow (minor) alarm for the link-down condition, or have the condition ignored. • System alarm—Predefined alarm that might be triggered by a missing rescue configuration, failure to install a license for a licensed software feature, or high disk usage.

Related Documentation

- Chassis Alarm Messages on a QFX3008-I Interconnect Device on page 898
- Chassis Alarm Messages on a QFX3500 Device on page 905
- Interface Alarm Messages on page 908
- *show chassis alarms*
- *show system alarms*

Chassis Alarm Messages on a QFX3008-I Interconnect Device

Chassis alarms indicate a failure on the device or one of its components. Chassis alarms are preset and cannot be modified.

The chassis alarm message count is displayed on the LCD panel on the front of the device. To view the chassis alarm message text remotely, use the **show chassis lcd** CLI command.

Chassis alarms on a QFX3008-I Interconnect device have two severity levels:

- Major (red)—Indicates a critical situation on the device that has resulted from one of the conditions described in Table 245 on page 899. A red alarm condition requires immediate action.
- Minor (yellow or amber)—Indicates a noncritical condition on the device that, if left unchecked, might cause an interruption in service or degradation in performance. A yellow alarm condition requires monitoring or maintenance.

Table 245 on page 899 describes the chassis alarm messages on a QFX3008-I Interconnect device.

Copyright © 2018, Juniper Networks, Inc.

Table 245: QFX3008-I Chassis Alarm Messages

Component	Alarm Type	CLI Message	Recommended Action
Control Board and Routing Engine NOTE: The Routing Engine is located on the Control Board	Major (red)	***slot-number* CB Not online**	Replace the Control Board and report the failure to customer support
		Backup RE Active	No action is required if the backup Routing Engine was intentionally made active. If the master Routing Engine failed, replace it.
		Loss of communication with Backup RE	Replace the failed Control Board.
		Mixed Master and Backup RE types	Both Routing Engines must be the same model number. Replace one of the Control Boards.
		CB *slot-number* CPE Connectivity down	Indicates that all links from the control board to the QFabric system control plane network are down. Check connectivity between the QFX3008-I Interconnect device and the EX4200 switches.
	Minor (yellow)	**CB *slot-number* Removed**	Indicates the chassis was powered on with both Control Boards installed, but one has been removed. The chassis can continue to operate without the Control Board, but airflow can be affected by the empty slot. Replace the missing Control Board as soon as possible.

Table 245: QFX3008-I Chassis Alarm Messages (continued)

Component	Alarm Type	CLI Message	Recommended Action
Fans	Major (red)	***Fan-name* Failure**	Replace the fan and report the failure to customer support.
		***Fan-name* I2C Failure**	Check the system log for one of the following messages and report the error message to customer support: • **CM ENV Monitor: Get fan speed failed**. • ***Fan-name* is NOT spinning @ correct speed**
	Minor (yellow)	***Fan-name* Absent**	Indicates the chassis was powered on without all the fan trays installed. The chassis can continue to operate without the fan tray for a limited time, but airflow can be affected by the empty slot. Replace the missing fan tray as soon as possible.
		***Fan-name* No Fan**	Indicates the chassis was powered on with all power supplies installed, but one has been removed. The chassis can continue to operate without the power supply, but airflow can be affected by the empty slot. Replace the missing power supply as soon as possible.
		***Fan-name* Overspeed**	The fan is spinning faster than necessary. There is no action required. If the problem persists, report the error to customer support.
Front and rear cards	Major (red)	**FPC *slot-number* Hard errors**	Replace the specified card and report the failure to customer support.
		FPC *slot-number* Volt Sensor Fail	Replace the specified card and report the failure to customer support.

Copyright © 2018, Juniper Networks, Inc.

Table 245: QFX3008-I Chassis Alarm Messages (continued)

Component	Alarm Type	CLI Message	Recommended Action
Power supplies	Major (red)	**PEM *pem-number* Input Failure**	Indicates a problem with the incoming AC power. Replace the power supply.
		PEM *pem-number* Not OK	Indicates a problem with the incoming AC or outgoing DC power. Replace the power supply.
		PEM *pem-number* Output Failure	Indicates a problem with the outgoing DC power. Replace the power supply.
		PEM *pem-number* Too Many I2C Failures	Check the system log for one of the following messages and report the error message to customer support: • **I2C Read failed for device *number*** • **PS *number*: Transitioning from online to offline**
		Too Many Supplies Missing	Too many power supplies have been removed from the chassis. Replace missing power supplies.
		Unrecognized	There is a problem with the power supply, replace the power supply and contact Juniper Technical Assistance Center (JTAC).
	Minor (yellow)	**PEM *pem-number* Absent**	Indicates the chassis was powered on without all the power supplies installed. The chassis can continue to operate without the power supply, but airflow can be affected by the empty slot. Replace the missing power supply as soon as possible.
		PEM *pem-number* Removed	Indicates the chassis was powered on with all power supplies installed, but one has been removed. The chassis can continue to operate without the power supply, but airflow can be affected by the empty slot. Replace the missing power supply as soon as possible.

Copyright © 2018, Juniper Networks, Inc.

Table 245: QFX3008-I Chassis Alarm Messages (continued)

Component	Alarm Type	CLI Message	Recommended Action
Temperature sensors	Major (red)	***sensor-location*** **Temp Sensor Fail**	Check the system log for the following message and report it to customer support: **Temp sensor *sensor-number* failed**, where *sensor-number* may range from 1 through 10.
		sensor-location **Temp Sensor Too Hot**	Check environmental conditions and alarms on other devices. Ensure that environmental factors (such as hot air blowing around the equipment) are not affecting the temperature sensor. If the condition persists, the switch may shut down.
	Minor (yellow)	***sensor-location*** **Temp Sensor Too Warm**	For information only. Check environmental conditions and alarms on other devices. Ensure that environmental factors (such as hot air blowing around the equipment) are not affecting the temperature sensor.

Related Documentation

- Chassis Status LEDs on a QFX3008-I Interconnect Device on page 727
- *Configuring the Junos OS to Determine Conditions That Trigger Alarms on Different Interface Types*
- *alarm*

Chassis Alarm Messages on a QFX3600 or QFX3600-I Device

Chassis alarms indicate a failure on the device or one of its components. Chassis alarms are preset and cannot be modified.

The chassis alarm message count is displayed on the LCD panel on the front of the device. To view the chassis alarm message text remotely, use the **show chassis lcd** CLI command.

Chassis alarms on QFX3600 and QFX3600-I devices have two severity levels:

- Major (red)—Indicates a critical situation on the device that has resulted from one of the conditions described in Table 246 on page 903. A red alarm condition requires immediate action.
- Minor (yellow or amber)—Indicates a noncritical condition on the device that, if left unchecked, might cause an interruption in service or degradation in performance. A yellow alarm condition requires monitoring or maintenance.

Table 246 on page 903 describes the chassis alarm messages on QFX3600 and QFX3600-I devices.

Copyright © 2018, Juniper Networks, Inc.

Table 246: QFX3600 and QFX3600-I Chassis Alarm Messages

Component	Alarm Type	CLI Message	Recommended Action
Fans	Major (red)	**Fan Failure**	Replace the fan and report the failure to customer support.
		Fan I2C Failure	Check the system log for one of the following messages and report the error message to customer support: • **CM ENV Monitor: Get fan speed failed**. • ***Fan-number* is NOT spinning @ correct speed**, where ***fan-number*** may be 1, 2, or 3.
		Fan *fan-number* Not Spinning	Remove and check the fan for obstructions, and then reinsert the fan. If the problem persists, replace the fan.
	Minor (yellow)	**Fan/Blower Absent**	The fan is missing. Install a fan.

Table 246: QFX3600 and QFX3600-I Chassis Alarm Messages (continued)

Component	Alarm Type	CLI Message	Recommended Action
Power supplies	Major (red)	**PEM *pem-number* Airflow not matching Chassis Airflow**	The power supply airflow direction is the opposite of the chassis airflow direction. Replace the power supply with a power supply that supports the same airflow direction as the chassis.
		PEM *pem-number* I2C Failure	Check the system log for one of the following messages and report the error message to customer support: • **I2C Read failed for device *number***, where ***number*** may be from 123 to 125. • **PS *number*: Transitioning from online to offline**, where power supply (PS) ***number*** may be 1 or 2.
		PEM *pem-number* is not powered	For information only. Check the power cord connection and reconnect it if necessary.
		PEM *pem-number* is not supported	Indicates a power supply problem, or the power supply is not supported on the device. Report the problem to customer support.
		PEM *pem-number* Not OK	Indicates a problem with the incoming AC or outgoing DC power. Replace the power supply.
	Minor (yellow)	**PEM *pem-number* Absent**	For information only. Indicates the device was powered on with two power supplies installed, but now one is missing. The device can continue to operate with a single power supply. If you wish to remove this alarm message, reboot the device with one power supply.
		PEM *pem-number* Power Supply Type Mismatch	For information only. Indicates that an AC power supply and DC power supply have been installed in the same chassis. If you wish to remove this alarm message, reboot the device with two AC power supplies or two DC power supplies.
		PEM *pem-number* Removed	For information only. Indicates the device was powered on with two power supplies installed, but one has been removed. The device can continue to operate with a single power supply. If you wish to remove this alarm message, reboot the device with one power supply.

Copyright © 2018, Juniper Networks, Inc.

Table 246: QFX3600 and QFX3600-I Chassis Alarm Messages (continued)

Component	Alarm Type	CLI Message	Recommended Action
Temperature sensors	Major (red)	***sensor-location*** **Temp Sensor Fail**	Check the system log for the following message and report it to customer support: **Temp sensor *sensor-number* failed**, where *sensor-number* may range from 1 through 10.
		sensor-location **Temp Sensor Too Hot**	Check environmental conditions and alarms on other devices. Ensure that environmental factors (such as hot air blowing around the equipment) are not affecting the temperature sensor. If the condition persists, the device may shut down.
	Minor (yellow)	***sensor-location*** **Temp Sensor Too Warm**	For information only. Check environmental conditions and alarms on other devices. Ensure that environmental factors (such as hot air blowing around the equipment) are not affecting the temperature sensor.

Related Documentation

- Chassis Status LEDs in the QFX3600 and QFX3600-I Device on page 749
- *Configuring the Junos OS to Determine Conditions That Trigger Alarms on Different Interface Types*
- *alarm*

Chassis Alarm Messages on a QFX3500 Device

Chassis alarms indicate a failure on the device or one of its components. Chassis alarms are preset and cannot be modified.

The chassis alarm message count is displayed on the LCD panel on the front of the device. To view the chassis alarm message text remotely, use the **show chassis lcd** CLI command.

Chassis alarms on QFX3500 devices have two severity levels:

- Major (red)—Indicates a critical situation on the device that has resulted from one of the conditions described in Table 247 on page 906. A red alarm condition requires immediate action.
- Minor (yellow or amber)—Indicates a noncritical condition on the device that, if left unchecked, might cause an interruption in service or degradation in performance. A yellow alarm condition requires monitoring or maintenance.

Table 247 on page 906 describes the chassis alarm messages on QFX3500 devices.

Table 247: QFX3500 Chassis Alarm Messages

Component	Alarm Type	CLI Message	Recommended Action
Fans	Major (red)	**Fan/Blower Absent**	The fan is missing. Install a fan.
		Fan Failure	Replace the fan and report the failure to customer support.
		Fan I2C Failure	Check the system log for one of the following messages and report the error message to customer support: • **CM ENV Monitor: Get fan speed failed**. • **CM ENV Monitor: Get fan speed failed *Fan-number* is NOT spinning @ correct speed**, where ***fan-number*** may be 1, 2, or 3.
		***fan-number* Not Spinning** Fan	Remove and check the fan for obstructions, and then reinsert the fan. If the problem persists, replace the fan.
Power Supplies	Major (red)	**PEM *pem-number* Airflow not matching Chassis Airflow**	The power supply airflow direction is the opposite of the chassis airflow direction. Replace the power supply with a power supply that supports the same airflow direction as the chassis.
		PEM *pem-number* I2C Failure	Check the system log for one of the following messages and report the error message to customer support: • **I2C Read failed for device *number***, where ***number*** may be from 123 to 125. • **PS *number*: Transitioning from online to offline**, where power supply (PS) ***number***may be 1 or 2.
		PEM *pem-number* is not supported	Indicates a power supply problem, or the power supply is not supported on the device. Report the problem to customer support.
		PEM *pem-number* Not OK	Indicates a problem with the incoming AC or outgoing DC power. Replace the power supply.

Copyright © 2018, Juniper Networks, Inc.

Table 247: QFX3500 Chassis Alarm Messages (continued)

Component	Alarm Type	CLI Message	Recommended Action
	Minor (yellow)	**PEM *pem-number* Absent**	For information only. Indicates the device was powered on with two power supplies installed, but now one is missing. The device can continue to operate with a single power supply. If you wish to remove this alarm message, reboot the device with one power supply.
		PEM *pem-number* is not powered	For information only. Check the power cord connection and reconnect it if necessary.
		PEM *pem-number* Power Supply Type Mismatch	For information only. Indicates that an AC power supply and DC power supply have been installed in the same chassis. If you wish to remove this alarm message, reboot the device with two AC power supplies or two DC power supplies.
		PEM *pem-number* Removed	For information only. Indicates the device was powered on with two power supplies installed, but one has been removed. The device can continue to operate with a single power supply. If you wish to remove this alarm message, reboot the device with one power supply.
Temperature Sensors	Major (red)	***sensor-location* Temp Sensor Fail**	Check the system log for the following message and report it to customer support: **Temp sensor *sensor-number* failed**, where *sensor-number* may range from 1 through 10.
		***sensor-location* Temp Sensor Too Hot**	Check environmental conditions and alarms on other devices. Ensure that environmental factors (such as hot air blowing around the equipment) are not affecting the temperature sensor. If the condition persists, the device may shut down.
	Minor (yellow)	***sensor-location* Temp Sensor Too Warm**	For information only. Check environmental conditions and alarms on other devices. Ensure that environmental factors (such as hot air blowing around the equipment) are not affecting the temperature sensor.

Related Documentation

- Front Panel of a QFX3500 Device on page 122

- *Configuring the Junos OS to Determine Conditions That Trigger Alarms on Different Interface Types*
- *alarm*

Interface Alarm Messages

Interface alarms are alarms that you configure to alert you when an interface is down.

To configure an interface link-down condition to trigger a red or yellow alarm, or to configure the link-down condition to be ignored, use the **alarm** statement at the [**edit chassis**] hierarchy level. You can specify the **ethernet**, **fibre-channel**, or **management-ethernet** interface type.

NOTE: Fibre Channel alarms are only valid on QFX3500 devices.

NOTE: When red alarms or major alarms are issued on QFX5100 and EX4600 switches, the alarm LED glows amber instead of red.

By default, major alarms are configured for interface link-down conditions on the control plane and management network interfaces in a QFabric system. The link-down alarms indicate that connectivity to the control plane network is down. You can configure these alarms to be ignored using the **alarm** statement at the [**edit chassis**] hierarchy level.

NOTE: If you configure a yellow alarm on the QFX3008-I Interconnect device, it will be handled as a red alarm.

Related Documentation

- Understanding Alarms on page 897

Understanding Alarm Types and Severity Levels on EX Series Switches

NOTE: This topic applies only to the J-Web Application package.

Alarms alert you to conditions that might prevent normal operation of the switch. Before monitoring alarms on a Juniper Networks EX Series Ethernet switch, become familiar with the terms defined in Table 248 on page 909.

Copyright © 2018, Juniper Networks, Inc.

Table 248: Alarm Terms

Term	Definition
alarm	Signal alerting you to conditions that might prevent normal operation. On a switch, the alarm signal is the **ALM** LED lit on the front of the chassis.
alarm condition	Failure event that triggers an alarm.
alarm severity	Seriousness of the alarm. If the Alarm (**ALM**) LED is red, this indicates a major alarm. If the Alarm LED is yellow, this indicates a minor alarm. If the Alarm LED is unlit, there is no alarm or the switch is halted.
chassis alarm	Preset alarm triggered by a physical condition on the switch such as a power supply failure, excessive component temperature, or media failure.
system alarm	Preset alarm triggered by a missing rescue configuration or failure to install a license for a licensed software feature. NOTE: On EX6200 switches, a system alarm can be triggered by an internal link error.

Alarm Types

The switch supports these alarms:

- Chassis alarms indicate a failure on the switch or one of its components. Chassis alarms are preset and cannot be modified.
- System alarms indicate a missing rescue configuration. System alarms are preset and cannot be modified, although you can configure them to appear automatically in the J-Web interface display or the CLI display.

Alarm Severity Levels

Alarms on switches have two severity levels:

- Major (red)—Indicates a critical situation on the switch that has resulted from one of the following conditions. A red alarm condition requires immediate action.
  - One or more hardware components have failed.
  - One or more hardware components have exceeded temperature thresholds.
  - An alarm condition configured on an interface has triggered a critical warning.
- Minor (yellow or amber)—Indicates a noncritical condition on the switch that, if left unchecked, might cause an interruption in service or degradation in performance. A yellow alarm condition requires monitoring or maintenance.

  A missing rescue configuration generates a yellow system alarm.

Related Documentation

- Checking Active Alarms with the J-Web Interface on page 910
- Dashboard for EX Series Switches on page 780

Checking Active Alarms with the J-Web Interface

Purpose

NOTE: **This topic applies only to the J-Web Application package.**

Use the monitoring functionality to view alarm information for the EX Series switches including alarm type, alarm severity, and a brief description for each active alarm on the switching platform.

Action

To view the active alarms:

1. Select **Monitor** > **Events and Alarms** > **View Alarms** in the J-Web interface.
2. Select an alarm filter based on alarm type, severity, description, and date range.
3. Click **Go**.

   All the alarms matching the filter are displayed.

NOTE: **When the switch is reset, the active alarms are displayed.**

Meaning

Table 249 on page 910 lists the alarm output fields.

Table 249: Summary of Key Alarm Output Fields

Field	Values
Type	Category of the alarm: • Chassis—Indicates an alarm condition on the chassis (typically an environmental alarm such as one related to temperature). • System—Indicates an alarm condition in the system.
Severity	Alarm severity—either major (red) or minor (yellow).
Description	Brief synopsis of the alarm.
Time	Date and time when the failure was detected.

Related Documentation

- Monitoring System Log Messages on page 911
- Dashboard for EX Series Switches on page 780
- Understanding Alarm Types and Severity Levels on EX Series Switches on page 908

Copyright © 2018, Juniper Networks, Inc.

Monitoring System Log Messages

Purpose

NOTE: **This topic applies only to the J-Web Application package.**

Use the monitoring functionality to filter and view system log messages for EX Series switches.

Action

To view events in the J-Web interface, select **Monitor** > **Events and Alarms** > **View Events**.

Apply a filter or a combination of filters to view messages. You can use filters to display relevant events. Table 250 on page 911 describes the different filters, their functions, and the associated actions.

To view events in the CLI, enter the following command:

show log

Table 250: Filtering System Log Messages

Field	Function	Your Action
System Log File	Specifies the name of a system log file for which you want to display the recorded events. Lists the names of all the system log files that you configure. By default, a log file, **messages**, is included in the **/var/log/** directory.	To specify events recorded in a particular file, select the system log filename from the list—for example, **messages**. Select **Include archived files** to include archived files in the search.
Process	Specifies the name of the process generating the events you want to display. To view all the processes running on your system, enter the CLI command **show system processes**. For more information about processes, see the *Junos OS Installation and Upgrade Guide*.	To specify events generated by a process, type the name of the process. For example, type **mgd** to list all messages generated by the management process.
Date From To	Specifies the time period in which the events you want displayed are generated. Displays a calendar that allows you to select the year, month, day, and time. It also allows you to select the local time. By default, the messages generated during the last one hour are displayed. End Time shows the current time and Start Time shows the time one hour before End Time.	To specify the time period: • Click the **Calendar** icon and select the year, month, and date—for example, **02/10/2007**. • Click the **Calendar** icon and select the year, month, and date—for example, **02/10/2007**. • Click to select the time in hours, minutes, and seconds.

Copyright © 2018, Juniper Networks, Inc.

Table 250: Filtering System Log Messages (continued)

Field	Function	Your Action
Event ID	Specifies the event ID for which you want to display the messages. Allows you to type part of the ID and completes the remainder automatically. An event ID, also known as a system log message code, uniquely identifies a system log message. It begins with a prefix that indicates the generating software process or library.	To specify events with a specific ID, type the partial or complete ID—for example, **TFTPD_AF_ERR**.
Description	Specifies text from the description of events that you want to display. Allows you to use regular expressions to match text from the event description. NOTE: Regular expression matching is case-sensitive.	To specify events with a specific description, type a text string from the description with regular expression. For example, type **^Initial*** to display all messages with lines beginning with the term *Initial*.
Search	Applies the specified filter and displays the matching messages.	To apply the filter and display messages, click **Search**.
Reset	Resets all the fields in the Events Filter box.	To reset the field values that are listed in the Events Filter box, click **Reset**.
Generate Raw Report NOTE: • Starting in Junos OS Release 14.1X53, a Raw Report can be generated from the log messages being loaded in the Events Detail table.The Generate Raw Report button is enabled after the event log messages start loading in the Events Detail table. • After the log messages are completely loaded in the Events Detail table, Generate Raw Report changes to Generate Report.	Generates a list of event log messages in nontabular format.	To generate a raw report: 1. Click **Generate Raw Report**. The *Opening filteredEvents.html* window appears. 2. Select **Open with** to open the HTML file or select **Save File** to save the file. 3. Click **OK**.

Copyright © 2018, Juniper Networks, Inc.

Table 250: Filtering System Log Messages (continued)

Field	Function	Your Action
Generate Report NOTE: Starting in Junos OS Release 14.1X53, a Formatted Report can be generated from event log messages being loaded in an Events Detail table.The Generate Report button appears only after event log messages are completely loaded in the Events Detail table. The Generate Raw Report button is displayed while event log messages are being loaded.	Generates a list of event log messages in tabular format, which shows system details, events filter criteria, and event details.	To generate a formatted report: 1. Click **Generate Report**. The *Opening Report.html* window appears. 2. Select **Open with** to open the HTML file or select **Save File** to save the file. 3. Click **OK**.

Meaning Table 251 on page 913 describes the Event Summary fields.

NOTE: By default, the View Events page in the J-Web interface displays the most recent 25 events, with severity levels highlighted in different colors. After you specify the filters, Event Summary displays the events matching the specified filters. Click the First, Next, Prev, and Last links to navigate through messages.

Table 251: Viewing System Log Messages

Field	Function	Additional Information
Process	Displays the name and ID of the process that generated the system log message.	The information displayed in this field is different for messages generated on the local Routing Engine than for messages generated on another Routing Engine (on a system with two Routing Engines installed and operational). Messages from the other Routing Engine also include the identifiers **re0** and **re1** that identify the Routing Engine.

Table 251: Viewing System Log Messages (continued)

Field	Function	Additional Information
Severity	Severity level of a message is indicated by different colors. • **Unknown**—Gray—Indicates no severity level is specified. • **Debug/Info/Notice**—Green—Indicates conditions that are not errors but are of interest or might warrant special handling. • **Warning**—Yellow—Indicates conditions that warrant monitoring. • **Error**—Blue—Indicates standard error conditions that generally have less serious consequences than errors in the emergency, alert, and critical levels. • **Critical**—Pink—Indicates critical conditions, such as hard-drive errors. • **Alert**—Orange—Indicates conditions that require immediate correction, such as a corrupted system database. • **Emergency**—Red—Indicates system panic or other conditions that cause the switch to stop functioning.	A severity level indicates how seriously the triggering event affects switch functions. When you configure a location for logging a facility, you also specify a severity level for the facility. Only messages from the facility that are rated at that level or higher are logged to the specified file.
Event ID	Displays a code that uniquely identifies the message. The prefix on each code identifies the message source, and the rest of the code indicates the specific event or error.	The event ID begins with a prefix that indicates the generating software process. Some processes on a switch do not use codes. This field might be blank in a message generated from such a process. An event can belong to one of the following type categories: • **Error**—Indicates an error or failure condition that might require corrective action. • **Event**—Indicates a condition or occurrence that does not generally require corrective action.
Event Description	Displays a more detailed explanation of the message.	
Time	Displays the time at which the message was logged.	

Copyright © 2018, Juniper Networks, Inc.

Release History Table

Release	Description
14.1X53	Starting in Junos OS Release 14.1X53, a Raw Report can be generated from the log messages being loaded in the Events Detail table.
14.1X53	Starting in Junos OS Release 14.1X53, a Formatted Report can be generated from event log messages being loaded in an Events Detail table.

Related Documentation

- Checking Active Alarms with the J-Web Interface on page 910
- Understanding Alarm Types and Severity Levels on EX Series Switches on page 908

Copyright © 2018, Juniper Networks, Inc.

Copyright © 2018, Juniper Networks, Inc.